IN THE UNITED STATES DISTRICT COURT
FOR THE WESTERN DISTRICT OF TEXAS
WACO DIVISION

THETA IP, LLC, Plaintiff, v. APPLE INC., Defendant.	Civil Action No.: 6:23-cv-00314-ADA **JURY TRIAL DEMANDED**

THETA IP, LLC'S RESPONSE CLAIM CONSTRUCTION BRIEF

TABLE OF CONTENTS

Page

I. THE COURT PROPERLY CONSTRUED THE CLAIMS BEFORE 1

II. SIGNAL PATH DOES NOT REQUIRE CONSTRUCTION..... 2

III. APPLE'S ALLEGED IMPEDANCE DEFINITION IS MISLEADING 5

A. The intrinsic evidence demonstrates that "impedance" in the patents refers only to an alternating current circuit parameter..... 7

B. The extrinsic evidence also demonstrates that "impedance" is understood to be an alternating current circuit parameter. 9

IV. SWITCHING AND DRIVE CURRENT DO NOT REQUIRE CONSTRUCTION..... 12

V. THIS COURT PROPERLY CONSTRUED THE DYNAMICALLY […] TERMS BEFORE..... 14

VI. BEST- AND WORST-CASE DO NOT REQUIRE CONSTRUCTION 16

VII. CONCLUSION..... 18

TABLE OF AUTHORITIES

Page(s)

CASES

Celgene Corp. v. Peter,
931 F.3d 1342 (Fed. Cir. 2019)..... 14

Liebel-Flarsheim Co. v. Medrad, Inc.,
358 F.3d 898 (Fed. Cir. 2004)..... 2

O2 Micro Int'l Ltd. v. Beyond Innovation Tech. Co.,
521 F.3d 1351 (Fed. Cir. 2008)..... 3, 18

Phillips v. AWH Corp.,
415 F.3d 1303 (Fed. Cir. 2005) (en banc)..... 2, 4, 7, 13

Playtex Products, Inc. v. Procter & Gamble Co.,
400 F.3d 901 (Fed. Cir. 2005)..... 14

SuperGuide Corp. v. DirecTV Enterprises, Inc.,
358 F.3d 870 (Fed. Cir. 2004)..... 4

Texas Digital Sys., Inc. v. Telegenix, Inc.,
308 F.3d 1193 (Fed. Cir. 2002)..... 14

Theta IP, LLC v. Samsung Elecs. Co. Ltd., et al.,
No. 6:20-cv-00160-ADA (W.D. Tex.)..... passim

U.S. Surgical Corp. v. Ethicon, Inc.,
103 F.3d 1554 (Fed. Cir. 1997)..... 18

Vitronics Corp. v. Conceptronic, Inc.,
90 F.3d 1576 (Fed. Cir. 1996)..... 14

Watson Industries, Inc. v. Murata Electronics North America, Inc.,
No. 02–C–0524–C, 2003 WL 23272375 (W.D. Wis. Sept. 29, 2003) 7

I. THE COURT PROPERLY CONSTRUED THE CLAIMS BEFORE

This will be the second case in which the Court has construed claims from Theta's patent family here. As with Samsung's prior efforts, Apple's proposed claim constructions here are transparent attempts to break or unduly limit claims—and each should be rejected in favor of the meaning clearly understood by a person of skill in the art from the context of the patents and other intrinsic evidence.

The Court's (and its Technical Advisor's) substantial investment in learning and construing claims in prior litigation will serve to simplify and reduce the effort required in *Markman* here. For example, as seen in Sections III, V, and VI below, three of the five sets of terms Apple now seeks to construe were previously considered by this Court in *Theta IP, LLC v. Samsung Elecs. Co. Ltd., et al.*, No. 6:20-cv-00160-ADA (W.D. Tex.) ("*Theta v. Samsung*"). Apple puts forward no legitimate basis to construe these terms differently when Apple is the defendant than the Court did when Samsung was the defendant. The two overlapping Asserted Patents ('825 and '202) and their claims that were asserted both here and in *Theta v. Samsung* have not changed. The other Asserted Patents here (parent '330 and continuations '164 and '210) share an identical specification and many overlapping claim elements.

As discussed below, Apple has not provided any reason to depart from the Court's prior treatment of those terms that it considered in the prior case. And Apple has similarly failed to provide any reason to adopt its improperly limiting proposed constructions for the terms that it identified for the first time here. *See* Sections II and IV, *infra*. Those proposals employ oft-employed and frequently rejected claim construction tactics—such as arguing an analog/digital distinction where none exists in the claims, or redefining terms with an expert declaration completely devoid of connection to the actual patent disclosures. Theta is confident that the Court

will see through Apple's improper efforts, and keep the claims to what a person of skill would understand from the intrinsic evidence—and this process to what it is intended for.

II. SIGNAL PATH DOES NOT REQUIRE CONSTRUCTION

Apple improperly seeks to stick the word "analog" into the phrase "signal path," everywhere it occurs in the Asserted Claims. Opening Br. at 4-7. This is unsupported, artificially limiting, and as such violates basic principles of claim construction. *See, e.g.*, *Liebel-Flarsheim Co. v. Medrad, Inc.*, 358 F.3d 898, 913 (Fed. Cir. 2004) ("it is improper to read limitations from a preferred embodiment described in the specification—even if it is the only embodiment—into the claims absent a clear indication in the intrinsic record that the patentee intended the claims to be so limited"); *Phillips v. AWH Corp.*, 415 F.3d 1303, 1320 (Fed. Cir. 2005) (en banc) ("one of the cardinal sins of patent law—reading a limitation from the written description into the claims"). Apple asks the Court to commit precisely this "cardinal sin" of claim interpretation—citing an embodiment, Figure 1, and arguing that it should limit the claims to the structures shown. Opening Br. at 5-6.

No construction of "signal path" is necessary, as the meaning of this term is apparent to an RF engineer of ordinary skill. Indeed, when Lenovo and Motorola filed their three IPRs against patents asserted here, they argued that no such construction was needed. The PTAB agreed, and was able to apply the plain meaning of "signal path" to a prior art reference and resolve a dispute in Theta's favor, and deny institution for lack of merit—all without construing the term. Ex. F, IPR2023-00694, Paper 10 (Decision Denying Institution of *Inter Partes* Review) at 8-10 (P.T.A.B. Oct. 23, 2023) ("We determine there are no other claim terms that need to be construed for this

decision.")[1]; *id.* at 19-20 (Petitioner's theory "would not be changing an impedance of a component 'in the signal path' as required by the claim"). Apple fails to mention ***this*** IPR, where the PTAB applied the signal path elements to a reference without construing signal path—because the "disputed issue was the proper application of a claim term to an accused process rather the scope of the term." *O2 Micro Int'l Ltd. v. Beyond Innovation Tech. Co.*, 521 F.3d 1351, 1362 (Fed. Cir. 2008); Opening Br. at 6-7 (discussing only IPR2023-00697 and -00698).

Claim construction begins with the claims in context, and the independent Asserted Claims all use "signal path" with open-ended, ***non-limiting language***. *See, e.g.*, Ex. A ('330 Patent) at claim 1 ("a signal path including"), claims 23 and 29 ("the signal path comprising:"); Ex. B ('825 Patent) at claims 3 and 8 ("signal path comprising a plurality of circuits, wherein the plurality of circuits includes"); Ex. C ('202 Patent) at claims 7, 11, and 13 ("a signal path comprising a plurality of circuits including at least"); Ex. D ('164 Patent) at claim 5 ("a plurality of circuits including a signal path comprising at least") and claim 10 ("comprising a plurality of circuits, wherein the plurality of circuits comprises at least a signal path"); Ex. E ('210 Patent) at claims 3, 6, and 10 ("a plurality of circuits, wherein the plurality of circuits comprise a receiver signal path and at least"). There is simply nothing anywhere in the claim language limiting the claims to analog components.

And a person of ordinary skill would know that it is not the case, as Apple implies, that all filters used in RF applications are analog. Opening Br. at 5.[2] Digital filtering or equalization would not be excluded from the scope of the claims—nor would be conversion of the AC signal

---

[1] The PTAB discussed whether it was necessary to construe "dynamically changing/adjusting" and "impedance," ultimately concluding that it was unnecessary to do so in rendering its decision to deny institution.

[2] Apple included citation to expert testimony on this point but refused Theta's request to make Apple's expert available for deposition prior to the due date for this Response brief.

to, or back from, digital if there were some purpose for doing so. Again, Apple's proposed limitation is not grounded in claim language, and would not be understood as necessarily required by the claims. That the Figure 1 embodiment Apple identifies uses analog versions of the described components, or separate chips, is not limiting to the claims.

Courts often reject similar attempts to limit claims that do not specify analog or digital to one or the other. *See, e.g.*, *SuperGuide Corp. v. DirecTV Enterprises, Inc.*, 358 F.3d 870, 876-81 (Fed. Cir. 2004) (finding "no reason" to limit claims that included a "mixer" to "analog technology" where: "The claim language does not limit the disputed phrases to any particular type of technology or specify a particular type of signal format, such as analog or digital. Indeed, neither "analog" nor "digital" appears in any of the asserted claims."). Here, as in *SuperGuide*, the "mixer [or filter] is not limited to any particular electronics because the claim language does not so limit the scope … ." *Id.* at 881. Here, as there, the preferred embodiments "may describe the [circuits] as including certain components, including a digital-to-analog converter, but that does not mean that the claims are so limited" to analog. *Id.*

Theta's statements in the instituted IPRs also do not limit the claims as Apple suggests. Opening Br. at 6-7. The embodiment of the *Rauhala* reference being discussed was indisputably entirely analog—and the distinction being made was between analog AC signal-carrying circuits and analog DC bias circuits. *Id.*, Ex. 2 at 49-52; *see also* Ex. G (Larson IPR Decl.) at ¶¶62-63, 66 ("the portion of supply current control circuit 72 used for setting bias current I_B, is not in the signal path, and would not be understood to be so by a person of ordinary skill in the art"). This was an argument about circuit topology and function, not an analog/digital distinction. Ex. G at ¶63:

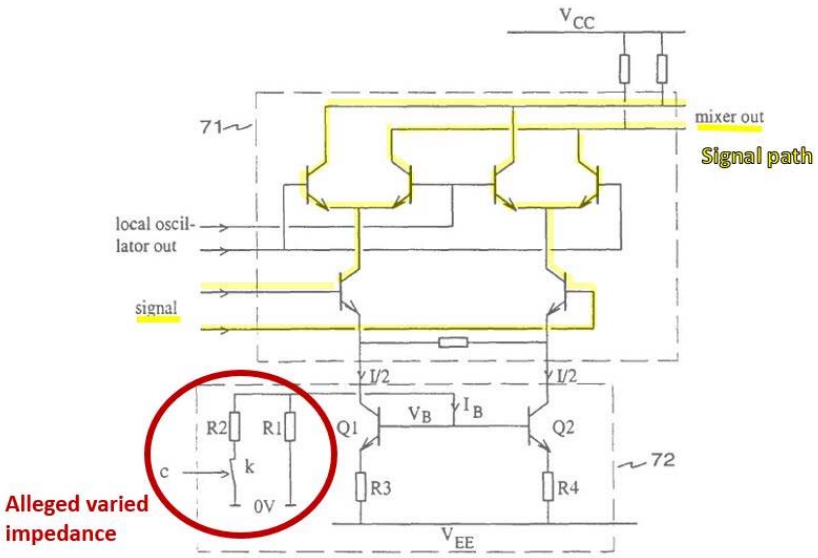

Fig. 7

The PTAB understood and adopted Theta's arguments about this topology distinction—without discussing whether the signals were analog or digital. Ex. F (Decision Denying Institution) at 19.

This Court, like the PTAB in IPR2023-00694, will be able to apply the plain meaning of signal path to references or Accused Products. The claim language is not limited to only analog signal paths or components, and the Court should decline Apple's invitation to improperly read in an analog limitation from the embodiment in the specification.

III. APPLE'S ALLEGED IMPEDANCE DEFINITION IS MISLEADING

In *Theta v. Samsung*, this Court found, correctly, that impedance has an understandable plain and ordinary meaning in context of the patents and declined to further construe it. *See* Claim Construction Order, No. 6:20-cv-00160-ADA, Dkt. 57 at 5 (W.D. Tex.). The Court explained its reasons on the *Markman* hearing record for not construing the term—including not wanting to speculate in advance of summary judgment about what a party ***might*** say. *Id.*, Dkt. 59 at 53:4-55:9, 56:1-57:6. Theta and Samsung agreed to use plain and ordinary meaning and the Court

adopted it. *Id.* at 59:2-19. Ultimately the issue of impedance did not resurface at summary judgment or in pretrial.

The issue of impedance ***did resurface*** in the context of Lenovo's IPRs filed after the *Theta v. Samsung* case concluded. Lenovo pointed to a change in a DC bias current as an alleged change in impedance according to the claims. It is not. Theta and its expert Prof. Larson argued convincingly that it was not so—including because "impedance" was used by Prof. Tsividis in the patents to refer only to an AC signal circuit parameter, while "resistance" is used in the patents to refer to DC bias circuit parameter. *See, e.g.*, Ex. G at ¶¶ 53-58. The PTAB ultimately denied institution based instead on lack of disclosure of the separate "in the signal path" requirement, or granted institution based on claims that did not include "impedance" at all—and so the PTAB did not yet reach or decide this dispute over how impedance is used in the patents. *See, e.g.*, Ex. F (Decision Denying Institution) at 9-10; Opening Br., Ex. 8 at 33 (instituting for claims 1, 3, and 8 because "Petitioner has met the institution threshold for claim 1").

Here, in its preliminary contentions, Apple has incorrectly alleged that DC bias current changes show changed impedance—as the term is used by Prof. Tsividis in the patents. And Apple filed an opening brief and submitted expert testimony that together do not even agree with the consensus dictionary definition of impedance as an AC circuit parameter. But applying the same rationale as the Court explained during the *Theta v. Samsung* hearing, the Court could avoid this issue for now and simply find that plain meaning to one of skill in the art is sufficiently well understood.

Other courts have construed "impedance." For example, in the first (Eastern District of Texas) case between Theta and Samsung, the court construed "impedance" as used in the context of this patent family to mean "opposition to the flow of alternating current." *See* Opening Br., Ex.

13 at 15. As another example, the court in *Watson Industries, Inc. v. Murata Electronics North America, Inc.*, No. 02–C–0524–C, 2003 WL 23272375 at *12 (W.D. Wis. Sept. 29, 2003) construed "impedance" to avoid the possibility of confusion with the term "resistance."

Theta believes that at some point there will be a live dispute about claim scope over the impedance term. To avoid any suggestion that Theta avoided or waived an issue, and in the event the Court deems that clarifying the latent dispute between the parties would be prudent now, Theta submits the following:

A. The intrinsic evidence demonstrates that "impedance" in the patents refers only to an alternating current circuit parameter.

Impedance is an alternating current circuit parameter. Impedance is a well-known term of art with a well-known definition to a person of ordinary skill in the art. Ex. G (Larson IPR Decl.) at ¶¶54-56. Even more to the point, the plain and ordinary meaning of impedance that is relevant here is the meaning to a person of ordinary skill in the art in the context of reading the Asserted Patents. *Id.*; *Phillips*, 415 F.3d at 1313-14 ("the ordinary meaning in the context of the written description and the prosecution history").

The Asserted Patent specification uses the term consistently with its ordinary definition of total opposition to the flow of alternating current. For example, in Figure 6 and related discussions of "impedance scaling," the impedance of the load seen by the driver is the total AC opposition including both resistive and capacitive (reactance) components. Ex. A ('330 Patent) at 7:44-52, Fig. 6. The discussion of "frequency response" is also consistent with the ordinary understanding of a person of skill in the art that impedance is an alternating current, frequency domain circuit analysis parameter. *Id.*; *see also* Ex. G at ¶¶54-56.

Because impedance is indisputably an AC circuit parameter, persons of skill in the art do not ordinarily refer to a resistance to a DC current as an impedance. Ex. G at ¶56. More

importantly, the Asserted Patents do not do so—using the term "resistance" only when discussing DC circuits, such as those for setting bias currents. *See, e.g.*, Ex. A ('330 Patent) at 7:35-41 (describing changing a DC bias current through "a resistance" by "by opening switches across portions of the resistance"), 8:12-14 ("increasing a load resistance using switches"). In contrast, when the circuit load includes reactance (*e.g.*, capacitors) and an AC signal current is being driven, the specification uses the term "impedance." *Id.*, 7:44-59. This is in keeping with ordinary usage of the terms and is how Prof. Tsividis used the terms to teach in the patent specification. Ex. G at ¶¶57-58.

The Asserted Patents teach control of bias currents, and control of impedances, as separate concepts. *See, e.g.*, Ex. A at 1:55-57 ("bias current reduction, impedance scaling, gain, and other dynamic changes either separately or in combination"), 8:17-19 ("These variables, or degrees of freedom, specifically reducing bias currents, increasing impedances, and increasing gain may be used as in the following examples"), Fig 9A:

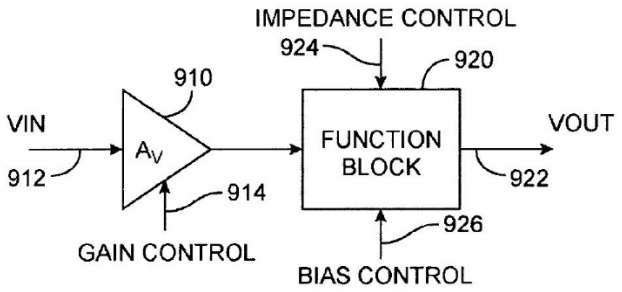

FIG. 9A

This teaching of separate and distinct control variables would make no sense if switching portions of "resistance" in or out to control a DC bias current (as in the example given with Figure 5) were also interpreted as an impedance control. *Id.*, 7:36-41 ("resistance"), Fig. 5. The patents discuss "impedance" changes separately, in context that makes clear they are referring to an

alternating current, frequency domain signal—in an example circuit that happens to include resistive and reactive (*e.g.*, capacitive) circuit elements. *Id.*, 7:44-59 ("impedance"), Fig. 6:

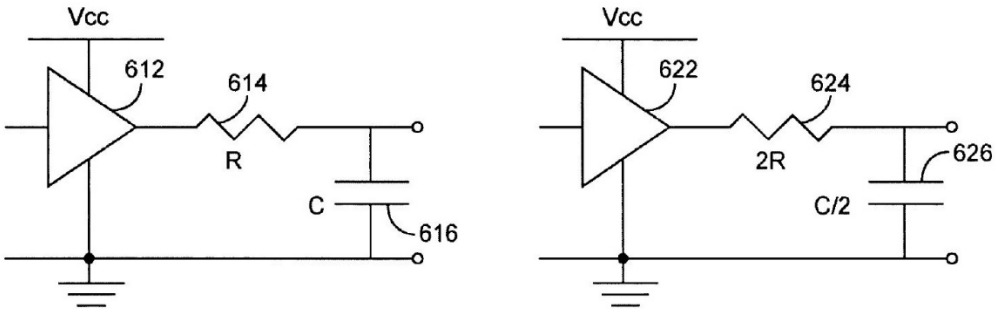

This ordinary understanding of impedance as used in the Asserted Patents is also consistent with the prosecution history. During prosecution of the '330 Patent, Applicant distinguished changes in a DC current, allegedly shown in prior art, from the claimed impedance change affecting an AC switching current. Opening Br., Ex. 10 at 8 ("a bias current is a DC or quiescent current, while a switching current is a dynamic or transient current").

In sum, as shown above, the Asserted Patents use "impedance" exclusively when referring to changes in (signal-carrying) AC currents, and use "resistance" exclusively when referring to changes in DC bias currents. In the context of the patents, a person of ordinary skill would not confuse or interchange these terms—even knowing, as they would, that impedance is made up of a resistance part and a reactance part, and that the impedance of a pure resistor to an AC current has a reactance part of zero. Impedance is an AC circuit parameter, as the patents, their prosecution history, the dictionaries and textbooks—and those experts not trying to invalidate the claims—all agree. *See, e.g.*, Ex. G at ¶¶52-58.

B. The extrinsic evidence also demonstrates that "impedance" is understood to be an alternating current circuit parameter.

Every dictionary and textbook that has been cited by either party here defines "impedance" of an electrical circuit or circuit component as an alternating current parameter. *See, e.g.*, Ex. D

(Graf, Modern Dictionary of Electronics) at 364 ("1. The total opposition (i.e., resistance and reactance) a circuit offers to the flow of alternating current at a given frequency"):

> **impedance** — 1. The total opposition (i.e., resistance and reactance) a circuit offers to the flow of alternating current at a given frequency; the ratio of the potential difference across a circuit or element of a circuit to the current through the circuit or element. It is measured in ohms, and its reciprocal is called admittance. Symbol: *Z*. 2. The combination of resistance and reactance 3. Combined opposition to current resulting from resistance, capacitance, and inductance. 4. The sinusoidal terminal voltage of a circuit divided by the current through it. 5. A speaker's resistance to an alternating current, which varies with frequency. A speaker's rated impedance is usually the value measured at 400 Hz. 6. The opposition to alternating current in a circuit, generally categorized as either high or low, and measured in ohms. 7. The total opposition that a circuit offers to the flow of alternating current or any other varying current at a particular frequency. It is a combination of resistance, *R*, and reactance, *X*, measured in ohms.

Ex. E (Laplante, Electrical Engineering Dictionary) at 365 ("electrical property of a network that measures its ability to conduct electrical AC current for a given AC voltage"); Ex. F (Nahvi, *et al.*, Electric Circuits, Fourth Ed.) at 9 ("sinusoidal voltage or current"), 11 ("impedance in the frequency domain"); *see also* Wikipedia, Electrical Impedance, *at* https://en.wikipedia.org/wiki/Electrical_impedance ("In electrical engineering, impedance is the opposition to alternating current presented by the combined effect of resistance and reactance in a circuit").

Apple points to a definition from the McGraw-Hill Dictionary of Scientific and Technical Terms, that Apple incorrectly alleges does not include the AC concept. Opening Br. at 9. It does. The definition of "impedance component" Apple cites is just a device for providing impedance, and the corresponding electrical circuit definition of "impedance" points to "[ELEC]. *See*

electrical impedance." *Id.*, Ex. 6 at 4.[3] The McGraw-Hill Dictionary definition of "electrical impedance," "[a]lso known as impedance," is given, as in all the other dictionaries, as the "total opposition that a circuit presents ***to an alternating current***:"

> **electrical impedance** Also known as impedance. [ELEC] **1.** The total opposition that a circuit presents to an alternating current, equal to the complex ratio of the voltage to the current in complex notation. Also known as complex impedance. **2.** The ratio of the maximum voltage in an alternating-current circuit to the maximum current; equal to the magnitude of the quantity in the first definition. { iˈlekˑtrəˑkəl imˈpēdˑəns }

McGraw-Hill Dictionary of Scientific and Technical Terms (5th Ed., 1994) at 649, 996, *available at* https://archive.org/details/mcgrawhilldictio1994park (emphasis added). Apple fails to cite or include in its dictionary excerpts exhibit the page for this electrical impedance definition (shown above) that contradicts its argument. Opening Br. at 9, Ex. 6.

This kind of selective and potentially misleading citation is one of the reasons dictionaries and similar extrinsic evidence come second to the intrinsic evidence in determining claim meaning. But here, all of the extrinsic evidence agrees with the way the term "impedance" is used in the patents and prosecution history—exclusively to refer to an alternating current parameter of a circuit or circuit component.

Should the Court decide to forestall future disputes and construe the term "impedance" in the context of the Asserted Patent claims, specification, and prosecution history, it should find that the plain and ordinary meaning in that context to a person of skill is "opposition to the flow of alternating current."

---

[3] Even the Physics definition refers to "a sinusoidally varying quantity," which in the example of "electrical impedance," would be an AC parameter. *Id.*

IV. SWITCHING AND DRIVE CURRENT DO NOT REQUIRE CONSTRUCTION

Apple's discussion of these terms, which occur in a few Asserted Claims, begins and ends with aspersions about Theta's supposed motivations. Opening Br. at 10 ("not been forthcoming"), 14 ("an effort to improperly surprise Apple"). In fact it was Apple that originally proposed construing these simple, easily understood terms. And it was Apple that paid an expert to come up with a tortured interpretation, based on state transitions and steady-state currents, that appears completely divorced from—and even contrary to—the patent specification. *Id.* at 11-13. These terms do not need construction.

The Asserted Patents use "drive current" in the ordinary sense to describe a current that drives (that is, carries) a signal through a load. *See, e.g.*, Ex. A ('330 Patent) at 7:44-59 ("A driver 612 has a load R 614 and C 616."), Fig. 6.:

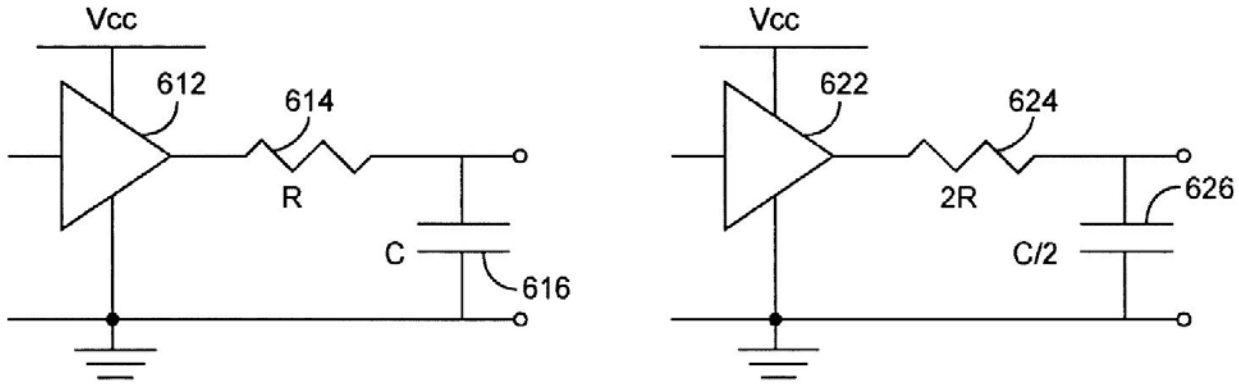

Drive currents as claimed are "in the signal path," and as described are for driving RF signals in and out of components in the path. *See, e.g.*, *id.* at claims 1 and 23, 9:37-39 ("an input signal is received on line 912 by optional gain element 910 which in turn drives function block 920."), 4:42-44 ("unwanted signal is filtered by low pass filters 108 and 110, which in turn drive baseband amplifiers 114 and 116").

Drive currents are distinguished in the patents from non-signal carrying bias current ("that is the current in the pull-down current source" in Fig. 6). *See id.* at 7:60-67. As Apple acknowledges, during prosecution of the '330 Patent, Theta also distinguished bias currents from "switching currents" (an alternate way to refer to drive currents here) as follows:

> **A bias current is not the same as a switching current. One skilled the art understands that a bias current is a DC or quiescent current, while a switching current is a dynamic or transient current that occurs during voltage transitions. (See for example, the pending application, Figure 6 and related discussion.) Accordingly, the cited references do not show or suggest reducing a switching current in the signal path by dynamically changing an impedance of a component in the signal path as required by the claim.**

Opening Br., Ex. 10 at 8. As used in the patents and prosecution history and understood by those skilled in the art, "a bias current is a DC or quiescent current," while "a switching current is a dynamic or transient current"—one that switches, for example because it carries an RF signal. *See, e.g.*, *id.* The patentee referred back to Figure 6 and the discussion of "drive current" for support for the concept of "switching current." *Id.* This is again easy to understand, because a drive current that carries a switching RF signal through a load will be a current that switches—alternatively called a "switching current," as patentee did in certain claims and during prosecution of the '330 Patent.

The Asserted Patents do not discuss "states," or the current required to maintain or transfer between them. Prof. Tentzeris' opinions about steady state and transition currents are devoid of citation—to the patents or anything else. *See, e.g.*, Opening Br., Ex. 1 at ¶36. And his suggestion that his interpretation is "consistent" with the patents is far too nonsensical to be accepted on the complete lack of explanation provided. *Id.* at ¶38. Conclusory expert assertions as to a term's definition, which contradict or ignore the intrinsic evidence, are not helpful to a court. *See Phillips*, 415 F.3d at 1318. When the intrinsic evidence provides an unambiguous understanding of a term,

as here, it would be error to rely on expert testimony to change or contradict it. *See, e.g.*, *Vitronics Corp. v. Conceptronic, Inc.*, 90 F.3d 1576, 1583 (Fed. Cir. 1996); *Texas Digital Sys., Inc. v. Telegenix, Inc.*, 308 F.3d 1193, 1212 (Fed. Cir. 2002); *Playtex Products, Inc. v. Procter & Gamble Co.*, 400 F.3d 901, 907-08 (Fed. Cir. 2005); *Celgene Corp. v. Peter*, 931 F.3d 1342, 1350-51 (Fed. Cir. 2019).

The Asserted Patents and the prosecution history of the '330 Patent provide all of the explanation needed to understand what a drive current and a switching current refer to in the context of the claims. These terms require no construction and Apple's suggested redefinition should be rejected.

V. THIS COURT PROPERLY CONSTRUED THE DYNAMICALLY […] TERMS BEFORE

The "dynamically [varying]" terms should be construed in *Theta v. Apple* the same way the Court construed them in *Theta v. Samsung*. Claim Construction Order, No. 6:20-cv-00160-ADA, Dkt. 57 at 2-3 (W.D. Tex.) ("Plain-and-ordinary-meaning, wherein the plain-and-ordinary meaning is 'adjusting during operation based—at least in part—on information gained during operation.'"). That construction was reached after extensive briefing and debate, during which the same incorrect allegations of disclaimer that Apple resurrects here were raised by Samsung, debunked by Theta, and rejected by the Court. *See, e.g.*, *id.*, Dkt. 45 at 2-9.

Even in Theta's first litigation against Samsung in the Eastern District of Texas, that court declined to find disclaimer. *See* Opening Br., Ex. 13 at 13-14 ("the statements in the prosecution history are subject to multiple reasonable interpretations, they do not constitute a clear and unmistakable departure from the ordinary meaning"). The court also refused to apply "any purported disclaimer" from statements during the prosecution of the '728 Patent—not asserted here—to claims of its parent, the '330 Patent. *Id.* at 10-11. The court understood the statements

from the ’728 Patent prosecution to distinguish a static “signal quality” threshold in the prior art from “dynamic adjustments based on signal strength ratios” in the ’728 Patent claims. *Id.* at 12. The Eastern District of Texas court’s negative “without reliance on” construction that Apple now urges here was not based on disclaimer at all, but on a statement by Theta’s former counsel in a reply brief. *Id.* at 14-15.

In this Court, reviewing the ’825 and ’202 Patents in *Theta v. Samsung*, Theta presented these and other arguments against Samsung’s allegations of disclaimer, and opposed its urging of the negative “without reliance on” construction. *See* Opening Br., Ex. 5 (No. 6:20-cv-00160-ADA, Dkt. 45) at 2-9. The Court considered these arguments, declined to find any disclaimer or any negative limitation about thresholds, and construed the terms only to require varying “during operation based—at least in part—on information gained during operation.” To rule differently here, on the same arguments re-raised by a different party, would frustrate Theta’s subsequent reliance and create inconsistency and injustice.

Apple’s revival of Samsung’s rejected arguments does not warrant a different result.

The “no thresholds” comment that Apple relies on— from prosecution of the non-asserted ’728 Patent—clearly referred only to the “independent claims in the [’728 Patent] case as now amended.” *See* Opening Br. at 16. The statement could not and did not apply to the inventions generally or to the different Asserted Claims of other patents here. The ’728 Patent claims under prosecution had specific language, not appearing in any Asserted Claim here, requiring for example: “dynamically changing … upon determination that the signal strength of the desired signal is higher than the strength of the interferer signal.” *Id.*, Ex. 11 at 2. In other words, the ’728 Patent claims measured one signal strength against another, not a static predetermined threshold, and the “no thresholds” comment is confined to that specific context and claim language.

Apple's other alleged disclaimers simply aren't. For instance, the distinction between Clark's two simple high-gain and low-gain states and the '825 Patent "continuous monitoring of the interferer signal levels to optimize" settings does not turn on, or rule out, use of thresholds in that monitoring. *Id.* at 18. And it is not a disclaimer to point out that the language of a construction—applied by the Court against patentee's wishes—is not present in the prior art. *Id.* at 18-19. Finally, the distinctions made between specific claim language of the '202 Patent and the specific "false alarm" threshold of the Loke reference are neither a generalized disclaimer of all thresholds nor applicable outside the context of those specific claims. *Id.* at 19-20.

In short, Apple presents no justification for applying a negative "without reliance on thresholds" construction to any Asserted Patent—much less across all five asserted here. The Court correctly construed the "dynamically [varying]" elements in the prior *Theta v. Samsung* case, and should adopt that construction here as well.

VI. BEST- AND WORST-CASE DO NOT REQUIRE CONSTRUCTION

The meaning of these terms is readily apparent to one of ordinary skill in the art reading the claims in context of the specification, which discuss and show examples at length. *See, e.g.*, Ex. A ('330 Patent) at 1:33-37, 6:3-13, Figure 2, 6:28-46, Fig. 3, 11:14-20; Fig. 11. For example, the patents describe a "worst case" signal condition with reference to several figures, where the desired signal is lower relative to the interferers that are present. *See, e.g.*, *id.*:

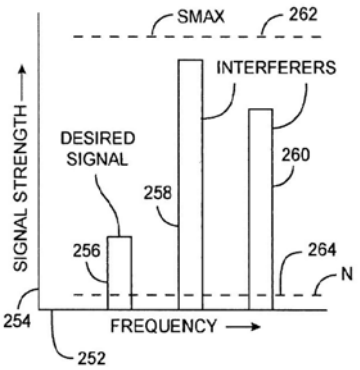

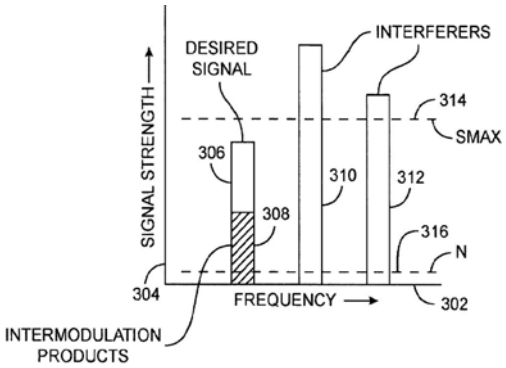

As the Court will likely recall, these terms were the subject of extensive briefing and debate in *Theta v. Samsung*. The Court denied Samsung's indefiniteness assertions and found that the terms—along with constituent words such as "high" and "low"—were readily understandable to a person of ordinary skill. *See, e.g.*, No. 6:20-cv-00160-ADA, Dkt. 57 at 4 (W.D. Tex.) ("Not indefinite. Plain-and-ordinary meaning."). Then, when the issue arose again in the context of Samsung's summary judgment motions, the Court ordered supplemental claim construction briefing. *See, e.g.*, *id.*, Dkt. 173, 232, 259. The meaning of the terms was debated for nearly an hour at the pretrial conference, and the Court denied Samsung's motion, without ordering any construction of the terms. *Id.*, Dkt. 266 at 5:12-42:25, 43:2-4 ("The Court is going to overrule the motion for summary judgment and maintain the construction of plain and ordinary meaning"). As the Court found, adopting a construction was not necessary to resolve the dispute there.

In that supplemental claim construction briefing and argument, Theta proposed possible constructions, consistent with the plain meaning, in the event the Court deemed them helpful to the jury. *Id.*, Dkt. 259 at 9-10 ("worst-case condition" is "when a low desired signal occurs with a high interferer signal"); Dkt. 266 at 41:14-42:5 ("Another way to do that is to give a construction that would rule out shenanigans"). This appears to be similar to what Apple now proposes, but similarly is not needed here.

There is even less reason to adopt a construction when—as here—there is not even a ripe dispute about claim scope to resolve. *O2 Micro*, 521 F.3d at 1362 ("We, however, recognize that district courts are not (and should not be) required to construe every limitation present in a patent's asserted claims."); *U.S. Surgical Corp. v. Ethicon, Inc.*, 103 F.3d 1554, 1568 (Fed. Cir. 1997) ("Claim construction is a matter of resolution of disputed meanings and technical scope, to clarify and when necessary to explain what the patentee covered by the claims, for use in the determination of infringement. It is not an obligatory exercise in redundancy."). Apple's proposed constructions for "worst-case" and "best-case" are unnecessary, and so should not be adopted—even if they are not obviously incorrect.

VII. CONCLUSION

For the foregoing reasons, the Court should decline to adopt Apple's improperly limiting proposed constructions.

Dated: December 8, 2023

Respectfully submitted,

/s/ Corey Johanningmeier

Denise M. De Mory (*Pro Hac Vice*)
California State Bar No. 168076
Corey Johanningmeier (Admitted)
California State Bar No. 251297
BUNSOW DE MORY LLP
701 El Camino Real
Redwood City, CA 94063
Telephone: (650) 351-7241
Facsimile: (415) 426-4744
ddemory@bdiplaw.com
cjohanningmeier@bdiplaw.com

B. Russell Horton
State Bar No. 10014450
GEORGE BROTHERS KINCAID & HORTON, LLP
114 West 7th Street, Ste. 1100
Austin, Texas 78701

(512) 495-1400 Telephone
(512) 499-0094 Facsimile
rhorton@gbkh.com

Attorneys for Plaintiff, Theta IP, LLC

CERTIFICATE OF SERVICE

The undersigned hereby certifies that the foregoing document was electronically filed and served via CM/ECF on all counsel of record on December 8, 2023.

/s/ Corey Johanningmeier
Corey Johanningmeier