UNITED STATES PATENT AND TRADEMARK OFFICE

BEFORE THE PATENT TRIAL AND APPEAL BOARD

LENOVO (UNITED STATES) INC. and
MOTOROLA MOBILITY LLC
Petitioners

v.

THETA IP, LLC
Patent Owner

IPR2023-00694
Patent No. 7,010,330 B1

PETITIONERS' REQUEST FOR REHEARING

TABLE OF CONTENTS

I. INTRODUCTION 1

II. ARGUMENT 2

A. The Board Misapprehended Rauhala's Disclosure that the Entirety of FIG. 7 is a Mixer within the Signal Path. 3

B. The Board Misapprehended the Meaning of "Signal Path" and Overlooked Petitioners' Evidence of What Constitutes a "Signal Path." 9

III. CONCLUSION 14

TABLE OF AUTHORITIES

Cases

Ultratec, Inc. v. CaptionCall, LLC, 872 F.3d 1267, 1272 (Fed. Cir. 2017) 3

Other Authorities

37 C.F.R. § 42.71 2

I. INTRODUCTION

In its Decision Denying Institution (Paper 10), the Board concluded that *Rauhala* (Ex. 1004) in FIG. 7 "shows current supply circuit 72 [. . .] outside the signal path." Paper No. 10 at 20. Relying on Patent Owner's misleading annotation of *Rauhala* FIG. 7, the Decision overlooked and misapprehended *Rauhala*'s teachings, and Petitioners' evidence and explanation thereof.

First, by isolating FIG. 7 from all other teachings of *Rauhala*, Patent Owner led the Board to misapprehend FIG. 7. *See* Paper No. 9 at 38-39. Contrary to Patent Owner's assertions, the circuitry shown in FIG. 7 is collectively a mixer in a "signal path." *Rauhala* shows in FIG. 2, for example, that mixers M1 and M2 are "linear units" downstream from antenna ANT, which receives input signals. Ex. 1004 at [0012]-[0013]. The supply currents of mixers M1 and M2 are set by control signals C_{M1} or C_{M2}, which are sent from control unit 22 to, and received directly by, mixers M1 and M2. *Id*. at [0013], FIG. 2. Control circuit 72, which Patent Owner alleges is somehow outside the signal path, receives the control signal C corresponding to control signals C_{M1} or C_{M2}. *Id*. at [0023]. Control circuit 72 must therefore be part of the mixers M1 and/or M2 that are within the "signal path." *See* Ex. 1002 at ¶¶103-105. In the context of *Rauhala*, taken as a whole, FIG. 7 is not separable into a portion within the signal path and a portion without, as Patent Owner contends. The Board erred in concluding otherwise.

Second, even if FIG. 7 were separable into two portions as Patent Owner suggests, the Board overlooked Petitioners' evidence that *Rauhala*'s "signal path" would *still* encompass both portions of FIG. 7. Neither Patent Owner nor the Board addressed *Rauhala*'s use of the term "signal path," *see* Paper No. 9 at 37-41; Paper No. 10 at 19-20, which encompasses the entirety of FIG. 2 and includes the mixer shown in FIG. 7. *See* Ex. 1004 at [0012]-[0013], [0023]. The Board also overlooked Dr. Baker's testimony, supported by dictionary evidence, that a person of ordinary skill in the art ("POSA") would have understood that the block diagram of FIG. 2 is a "signal path." *Compare* Paper No. 10 at 19-20 *with* Ex. 1002 at ¶¶198-199.

The Decision's misapprehensions of *Rauhala*'s teachings, the Petition, and Petitioners' evidence warrant rehearing and institution of all challenged claims of the '330 patent.

II. ARGUMENT

A request for rehearing must specifically identify the matters that the Board "misapprehended or overlooked," and the panel reviews its decision for an abuse of discretion. 37 C.F.R. § 42.71(c)-(d). The Board abuses its discretion where its decision "(1) is clearly unreasonable, arbitrary, or fanciful; (2) is based on an erroneous conclusion of law; (3) rests on clearly erroneous fact findings; or (4) involves a record that contains no evidence on which the Board could rationally

base its decision." *Ultratec, Inc. v. CaptionCall, LLC*, 872 F.3d 1267, 1272 (Fed. Cir. 2017).

A. The Board Misapprehended Rauhala's Disclosure that the Entirety of FIG. 7 is a Mixer within the Signal Path.

The Institution Decision concluded, based on Patent Owner's annotation of *Rauhala* FIG. 7, "that current supply circuit 72 (including resistors R1 and R2 and switch k) is outside the signal path." Paper No. 10 at 20. In so doing, the Board misapprehended *Rauhala*, overlooking *Rauhala's* teachings that control circuit 72 is indeed *part of* a mixer in the signal path. The Board also overlooked Dr. Baker's dictionary-supported testimony that a POSA would have understood that the mixer of *Rauhala* FIG. 7 is disposed within a signal path.

It is undisputed that *Rauhala* FIG. 2 shows a signal path, including at minimum antenna ANT, detector DET, and the "linear units" between them. *See, e.g.*, Ex. 1004 at [0012]-[0013]; Paper No. 9 at 37-41. *Rauhala* FIG. 2 shows "a control unit 22 . . . for controlling the supply currents of the linear units" which include amplifiers (e.g., A1, A2, and A3) and mixers (e.g., M1 and M2). Ex. 1004 at [0013]. The outputs of control unit 22 (control signals C) are sent to the amplifiers and the mixers. *Id.* For example, signal C_{M1} sets the supply current of mixer M1, and signal C_{M2} sets the supply current of mixer M2. *Id.*

The entirety of the circuit shown in *Rauhala* FIG. 7 is part of a mixer. *Rauhala* explains that "Fig. 7 shows [an] example of controlling a linear unit's supply current," such as a supply current for mixer M1 or mixer M2 of *Rauhala* FIG. 2. Ex. 1004 at [0023]. *Rauhala* FIG. 7 shows a mixer including its control circuit 72. Ex. 1004 at [0023]. The control circuit 72 includes switch k controlled with a one-bit digital signal C, like C_{M1} or C_{M2} from FIG. 2. *Id.* The control circuit 72 is the only structure in FIG. 7 that receives the control signal C. Thus, in order for the mixer in FIG. 7 to receive the output of the control unit, as described with reference to FIG. 2, control circuit 72 <u>must be part of the mixer itself</u>. This is shown graphically in annotated FIGS. 2 and 7 of *Rauhala* below, with the control signals C_{M1}, C_{M2} and C annotated in green, and *Rauhala's* mixers annotated in red:

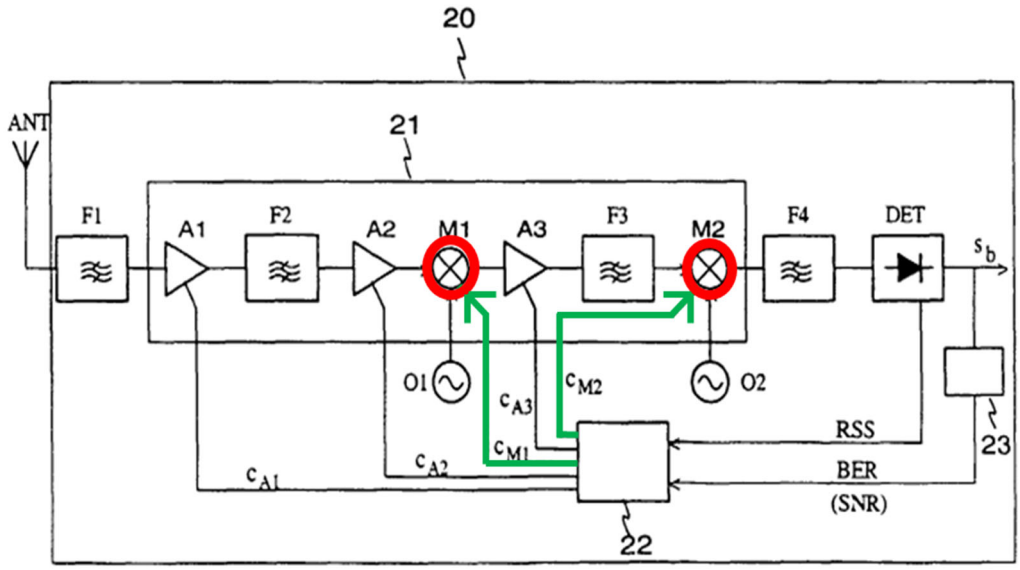

Fig. 2

Ex. 1004 at FIG. 2 (annotated).

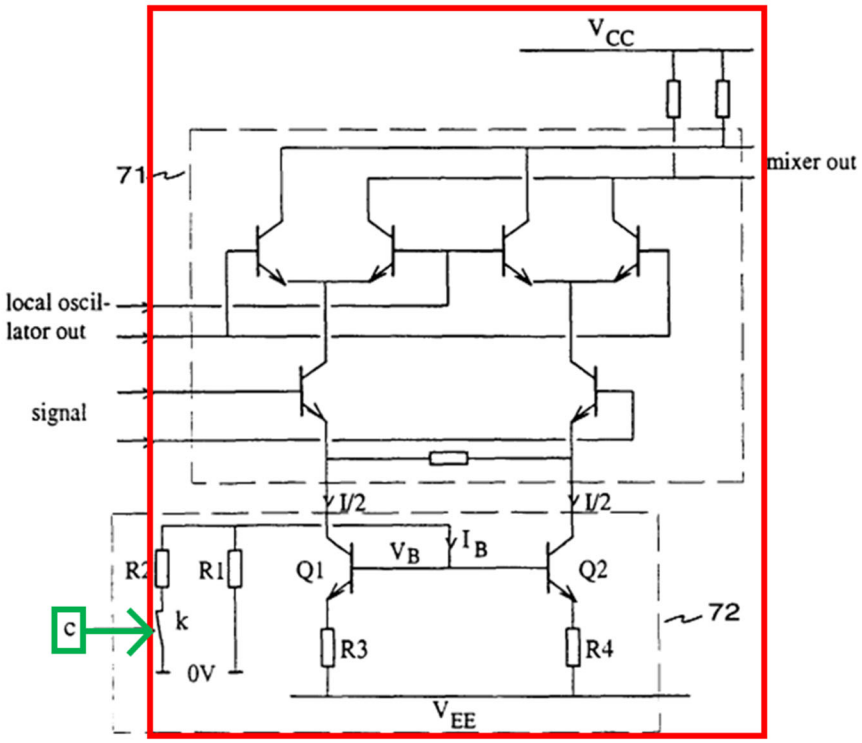

Fig. 7

Ex. 1004 at FIG. 7 (annotated).

The Board adopted Patent Owner's unsupported conclusion that only something less than the entirety of the device shown in *Rauhala* FIG. 7 is within the "signal path." Patent Owner misleadingly states that "Lenovo never discusses this in the signal path aspect of the claim elements." Paper No. 9 at 38. On the contrary, both Petitioners and Dr. Baker address this extensively.

In his Declaration, Dr. Baker cited to Modern Dictionary of Electronics to discuss block diagrams and signal paths. In the definition of a "Block diagram,"

the Dictionary uses an example circuit, which includes a mixer disposed within the circuit. The Dictionary discloses that "[t]he block diagram serves to indicate the various data and control **signal paths** between functional units of the system hardware. Ex. 1011 at 7 (emphasis added).

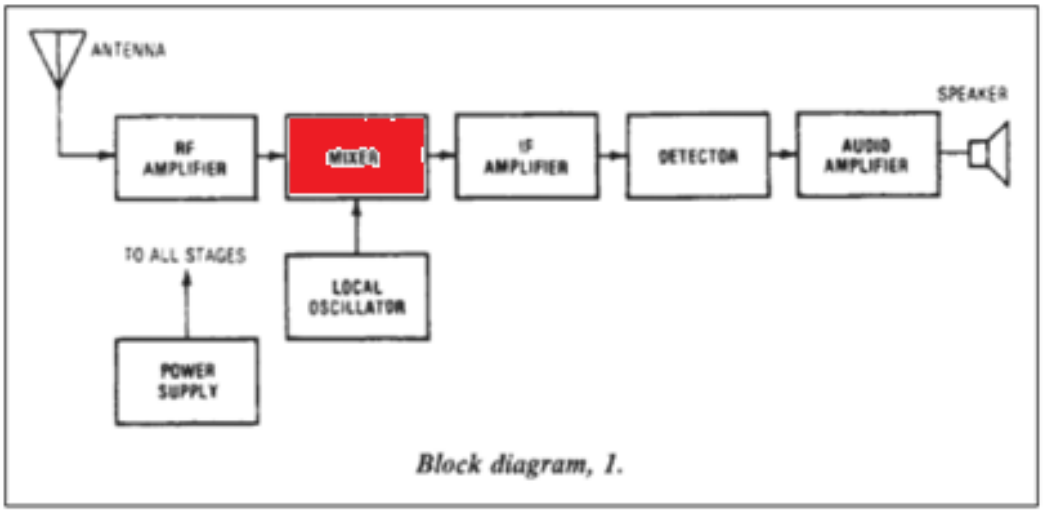

Block diagram, 1.

Dr. Baker's declaration relies on the Dictionary to support that diagrams in the prior art show a mixer in a signal path. Ex. 1002 at ¶¶103-105 ("[i]t is my opinion that a person of ordinary skill in the art would have understood that the block diagrams of FIGS. 2D, 2E, and 2F [] show that . . . the mixing section 215 . . . [is] included in the signal path), 143-144, 154 ("[i]t is my opinion that a person of ordinary skill would have recognized that, for example, FIG. 2 of *Rauhala* is a block diagram . . . [t]he path of the signal or energy may be indicated by lines or arrows"), 198, and 202.

Patent Owner's argument that only part of the mixer shown in *Rauhala* FIG. 7 is within the claimed "signal path," while the remainder is outside rests entirely on Dr. Larson's unsubstantiated and erroneous opinion. The entire portion of Dr. Larson's Declaration attempting to define the signal path as less than the entirety of the *Rauhala* mixer is shown below:

> 63. As can be seen from the figures, the bias current setting portions of circuit 62 of Figure 6 and circuit 72 of Figure 7 are not in the signal path, which proceeds from "in" to "out" of amplifier 61 in Figure 6, and proceeds from "signal" up to "mixer out" of mixer 71 in Figure 7. *See, e.g.*, *id.*, Fig. 7 (annotated below):

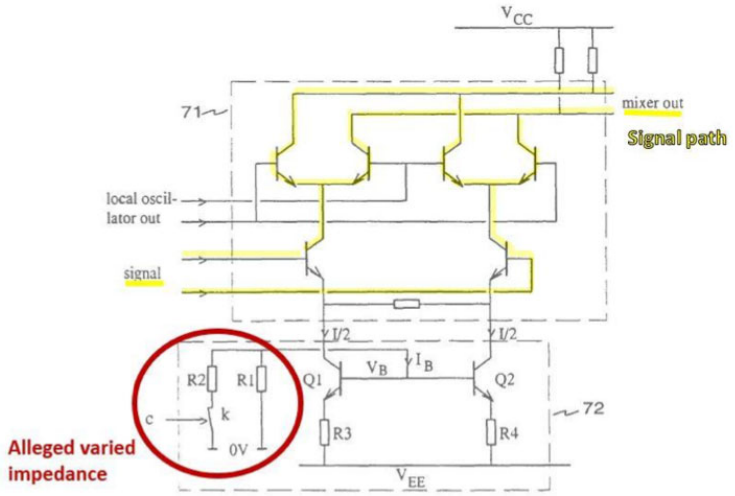

Fig. 7

Ex. 2005 at ¶63 (emphasis in original).

As shown above, Dr. Larson cites no extrinsic evidence to support his conclusion that linear unit 71 and control circuit 72 are somehow separate. Besides Dr. Larson's conclusory and unsupported opinion, the remaining record evidence

demonstrates that the mixer shown in *Rauhala* FIG. 7 is within the "signal path." *See* Ex. 1004 at [0012]-[0013], [0023]; Ex. 1004 at ¶¶103-105, 143-144, 154, 198, and 202; Ex. 1011 at 7. None of the remaining evidence supports the conclusion that only part of a mixer should be considered within the signal path. Patent Owner ignored this evidence, leading the Board to overlook it.

Furthermore, not even the '330 patent supports Patent Owner's contention that linear unit 71 of *Rauhala* FIG. 7 should be conceptually separate from control circuit 72. The '330 patent itself provides no suggestion that only a portion of a mixer should be considered to be within the signal path. Instead, the '330 patent states that "[t]he receiver includes a **signal path** formed by low-noise amplifier 102, **I and Q mixers 104 and 106**, low pass filters 108 and 110, and baseband amplifiers 114 and 116." Ex. 1001 at 4:15-17 **(**emphasis added) and FIG. 1. The '330 patent therefore depicts mixers in the "signal path" in that same manner as *Rauhala*, as shown in annotated FIG. 1 below:

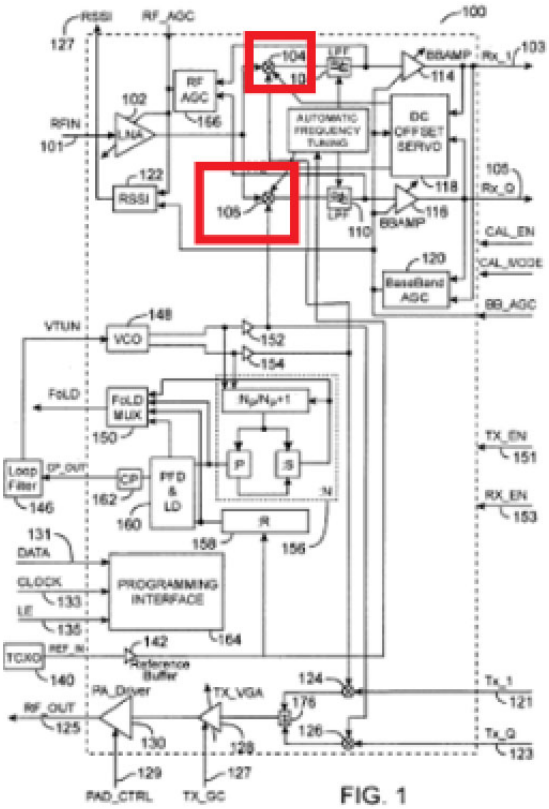

FIG. 1

Ex. 1004 at FIG. 1 (annotated).

Accordingly, by relying on Patent Owner's myopic argument that the mixer shown in *Rauhala* FIG. 7 is separable into two components, the Board overlooked *Rauhala*'s explicit disclosure that the mixer of FIG. 7 is entirely within the signal path shown in FIG. 2. The Board further overlooked Dr. Baker's testimony confirming that the mixer of *Rauhala* FIG. 7 is entirely within the signal path of FIG. 2.

B. The Board Misapprehended the Meaning of "Signal Path" and Overlooked Petitioners' Evidence of What Constitutes a "Signal Path."

Even if the Board accepts Patent Owner's assertion that *Rauhala* FIG. 7

shows a device conceptually separable into two parts, which Petitioners do not concede, the Board misapprehended the meaning of "signal path" by adopting Patent Owner's conclusory and overly narrow meaning of the claim term. The Board also overlooked both *Rauhala*'s use of the term and Dr. Baker's dictionary-supported testimony as to what a POSA would have understood "signal path" to mean, neither of which supports an interpretation of "signal path" as restrictive as Patent Owner asserts.

As a threshold matter, neither Patent Owner nor Dr. Larson explains what a POSA would understand the term "signal path" to mean. *See, e.g.*, Paper No. 9 at 37-41; Ex. 2005 at ¶¶59-63. Patent Owner has not advanced any construction of "signal path," let alone the narrow construction that it presupposes by excluding portions of *Rauhala* Fig. 7. *See* Paper No. 9 at 21-30. Besides Dr. Larson's unsupported conclusion that part of *Rauhala* FIG. 7 is within the claimed "signal path," while the remainder is outside, Patent Owner has offered no evidence to show what a POSA would even understand "signal path" to mean. The only record evidence demonstrating how a POSA would understand this term was offered by Petitioners. Patent Owner ignored this evidence, and the Board overlooked it.

First, the Board overlooked *Rauhala*'s own use of the term "signal path," which directly contradicts Patent Owner's and Dr. Larson's characterization of *Rauhala* FIG. 7. *Rauhala* depicts several examples of radio receivers in its figures.

Ex. 1004 at [0011]-[0013]; FIGS. 1-5 Describing the figures, *Rauhala* states that "Fig. 1 is a simplified example of a radio receiver without the low-frequency components," and that "Fig. 2 shows a similar **signal path** structure as Fig. 1." *Id.* at [0012]-[0013] (emphasis added). *Rauhala* does not otherwise use the term "signal path," and does not suggest that any component depicted in Figure 2 is excluded from the signal path. Understood in the context of *Rauhala*'s written specification, FIG. 2 of *Rauhala*, reproduced with annotations below, shows that the signal path includes at least the components within the rotation highlighted blue:

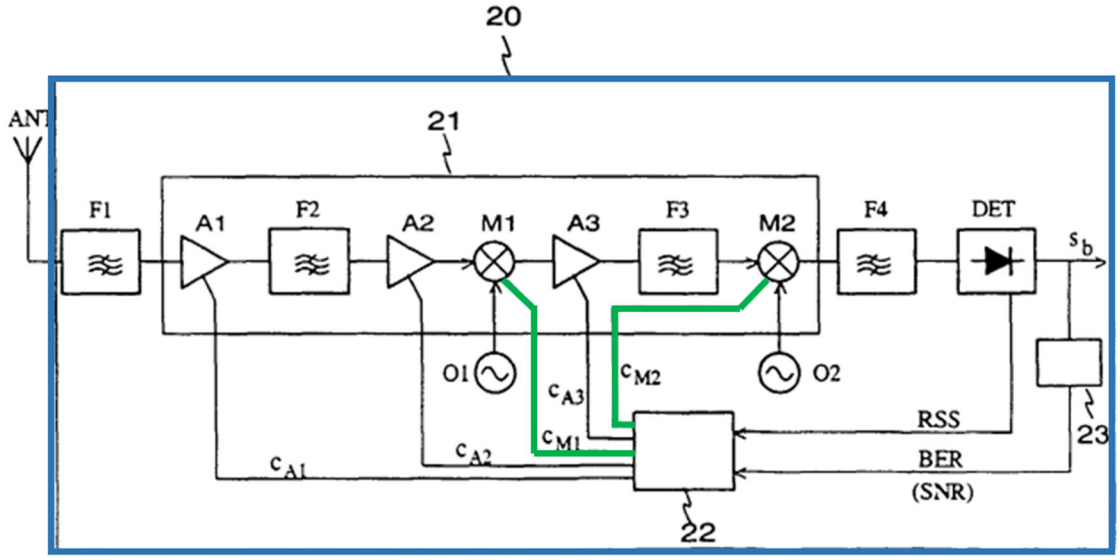

Fig. 2

Ex. 1004 at FIG. 2 (annotated).

Even if the Board accepts Patent Owner's argument that control circuit 72 shown in *Rauhala* Figure 7 is somehow separate from linear unit 71, control circuit

72 is *still* within the signal path defined by *Rauhala*. Describing the radio receiver shown in Fig. 2, *Rauhala* states that signal C_{M1} "sets the supply current" of mixer M1 and "signal C_{M2} that of mixer M2." Ex. 1004 at [0013]. Signals C_{M1} and C_{M2} are highlighted green in Figure 2 above and are shown entirely within the signal path that is highlighted blue. Referring to Fig. 7, *Rauhala* explains that "linear unit 71 is an analog multiplier used as a mixer," like M1 and M2 of Figure 2. *Id.* at [0023]. *Rauhala* further explains that "[s]witch k" of control circuit 72 "is controlled with a one-bit digital signal C," like C_{M1} or C_{M2}. *Id.* Figure 7 of *Rauhala* is reproduced below with annotations:

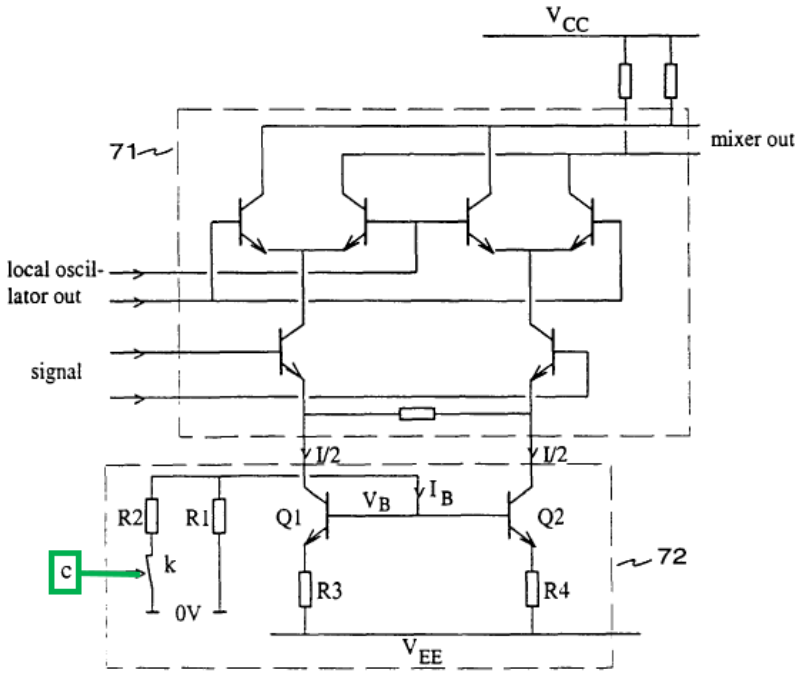

Fig. 7

Ex. 1004 at Fig. 7 (annotated).

Regardless of whether control circuit 72 and linear unit 71 are conceptually separated, as urged by Patent Owner, *Rauhala* demonstrates that control circuit 72 nevertheless receives control signal C, highlighted above in green. As shown above in Fig. 2, signals C_{M1} or C_{M2}, which correspond to control signal C, exist entirely within the "signal path" defined by *Rauhala*. *See* Ex. 1004 at [0013]. To receive a control signal C, C_{M1}, or C_{M2} when "linear unit 71 is […] used as a mixer," control circuit 72 must therefore be at least within the same "signal path" shown by the blue rectangle in annotated FIG. 2 above. *See id.* at [0013], [0023]. By adopting Patent Owner's and Dr. Larson's oversimplified characterization of *Rauhala* FIG. 7, the Board overlooked the foregoing disclosure of *Rauhala*.

The Board also overlooked Dr. Baker's unrebutted testimony as to how a POSA would understand *Rauhala* Figure 2. Citing the Modern Dictionary of Electronics, Dr. Baker testified that a POSA would have recognized that "FIG. 2 of *Rauhala* is a block diagram [. . .] in which their [sic] essential systems units are drawn as blocks, and their relationship to each other is indicated by appropriately connected lines." Ex. 1002 at ¶198 (citing Ex. 1011 at 7.) Dr. Baker further explained that *Rauhala* Figure 2 "serves to indicate the various data and control **signal paths** between functional units of the system hardware." Ex. 1002 at ¶198 (citing Ex. 1011 at 7 (emphasis added).) Dr. Baker concluded that a POSA would have understood FIG. 2 to "show[] a signal path, [and] that the components

represented in the block diagrams [sic], amplifier A2 and mixer M1, and others, are included in the signal path." Ex. 1002 at ¶199. Patent Owner and Dr. Larson both fail to address Dr. Baker's opinion as to *Rauhala* FIG. 2 and neglect to offer any competing view of how a POSA would have understood Figure 2.

Accordingly, by accepting Dr. Larson's conclusory and unsupported annotation of *Rauhala* Fig. 7, the Board overlooked *Rauhala*'s explicit disclosure and Dr. Baker's supporting testimony that the "signal path" in *Rauhala* includes all of the components shown in FIG. 2, and consequently all of the components of FIG. 7. The Board further misapprehended the claim term "signal path" by narrowly interpreting the term to exclude control circuit 72, effectively adopting a construction advanced by neither Patent Owner nor Petitioners.

III. CONCLUSION

For the reasons set forth above, Petitioners respectfully request that the Board reconsider and grant *inter partes* review of the challenged claims of the '330 patent.

Respectfully submitted,

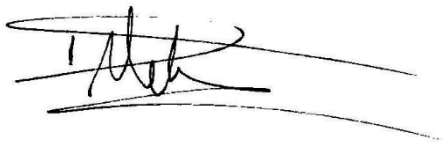

Dated: November 22, 2023

Dinesh N. Melwani (Reg. No. 60,670)
Bookoff McAndrews, PLLC
2020 K Street NW, Suite 400
Washington, D.C. 20006
202-808-3497

Attorneys for Petitioners
Lenovo (United States) Inc. and
Motorola Mobility LLC

CERTIFICATE OF SERVICE

Pursuant to 37 C.F.R. § 42.6, the undersigned hereby certifies that this "PETITIONERS' REQUEST FOR REHEARING" was served by filing this document through the Patent Trial and Appeal Case Tracking System (P-TACTS) and via e-mail to the following attorneys of record for the Patent Owner listed below:

Lead Counsel	Aaron R. Hand Reg. No. 80,694 Bunsow De Mory LLP 701 El Camino Real Redwood City, CA 94063 Telephone: 650-351-7248 Facsimile: 415-426-4744 ahand@bdiplaw.com
Back-up Counsel	Corey Johanningmeier Bunsow De Mory LLP 701 El Camino Real Redwood City, CA 94063 Telephone: 650-351-7248 Facsimile: 415-426-4744 cjohanningmeier@bdiplaw.com
Service Email	BDIP_ThetaIP-Lenovo@bdiplaw.com

Dated: November 22, 2023

Respectfully submitted,

By: _____
Dinesh N. Melwani (Reg. No. 60,670)
Counsel for Petitioners