US006335952B1

(12) **United States Patent**
Lee et al.

(10) **Patent No.: US 6,335,952 B1**
(45) **Date of Patent: *Jan. 1, 2002**

(54) **SINGLE CHIP CMOS TRANSMITTER/RECEIVER**

(75) Inventors: **Kyeongho Lee**; **Deog-Kyoon Jeong**, both of Seoul (KR)

(73) Assignee: **GCT Semiconductor, Inc.**, San Jose, CA (US)

(*) Notice: This patent issued on a continued prosecution application filed under 37 CFR 1.53(d), and is subject to the twenty year patent term provisions of 35 U.S.C. 154(a)(2).

Subject to any disclaimer, the term of this patent is extended or adjusted under 35 U.S.C. 154(b) by 0 days.

(21) Appl. No.: **09/121,601**

(22) Filed: **Jul. 24, 1998**

(51) **Int. Cl.**[7] **H03D 3/18**
(52) **U.S. Cl.** **375/327**; 375/219; 375/215
(58) **Field of Search** 375/215, 280, 375/294, 331, 332, 327, 376, 373; 329/307, 325, 360; 327/156, 147; 455/260, 180.3; 331/1

(56) **References Cited**

U.S. PATENT DOCUMENTS

5,175,729 A * 12/1992 Borras et al. 370/345
5,408,201 A * 4/1995 Uriya 331/2
5,418,815 A * 5/1995 Ishikawa et al. 375/216
5,438,591 A * 8/1995 Oie et al. 375/261
5,507,025 A * 4/1996 Rodeffer 455/266
5,555,182 A * 9/1996 Galm 702/69
5,584,062 A * 12/1996 Meador et al. 455/260
5,614,868 A * 3/1997 Nielson ..... 331/1 A
5,734,970 A * 3/1998 Saito 455/76
5,761,617 A * 6/1998 Yonekura et al. 455/343
5,794,119 A * 8/1998 Evans et al. 455/71
5,861,773 A * 1/1999 Meyer 329/304
5,872,810 A * 2/1999 Phillips et al. 375/222
5,894,592 A * 4/1999 Brueske et al. 455/86
5,950,119 A * 9/1999 McGeehan et al. 455/302
6,084,905 A * 7/2000 Ishifuji et al. 375/202
6,097,768 A * 8/2000 Janesch et al. 375/330

* cited by examiner

Primary Examiner—Chi Pham
Assistant Examiner—Emmanuel Bayard
(74) *Attorney, Agent, or Firm*—Fleshner & Kim, LLP

(57) **ABSTRACT**

A single chip RF communication system and method is provided including a transmitter and a receiver. The RF communication system in accordance with the present invention includes an antenna for receiving transmitting RF signals, a PLL for generating multi-phase clock signals having a frequency different from a carrier frequency in response to the multi-phase clock signals and a reference signal having the carrier frequency, a demodulation-mixing unit for mixing the received RF signals with the multi-phase clock signals having the frequency different from the carrier frequency to output the RF signals having a frequency reduced by the carrier frequency and an A/D converting unit for converting the RF signals from the mixing unit into digital signals.

32 Claims, 15 Drawing Sheets

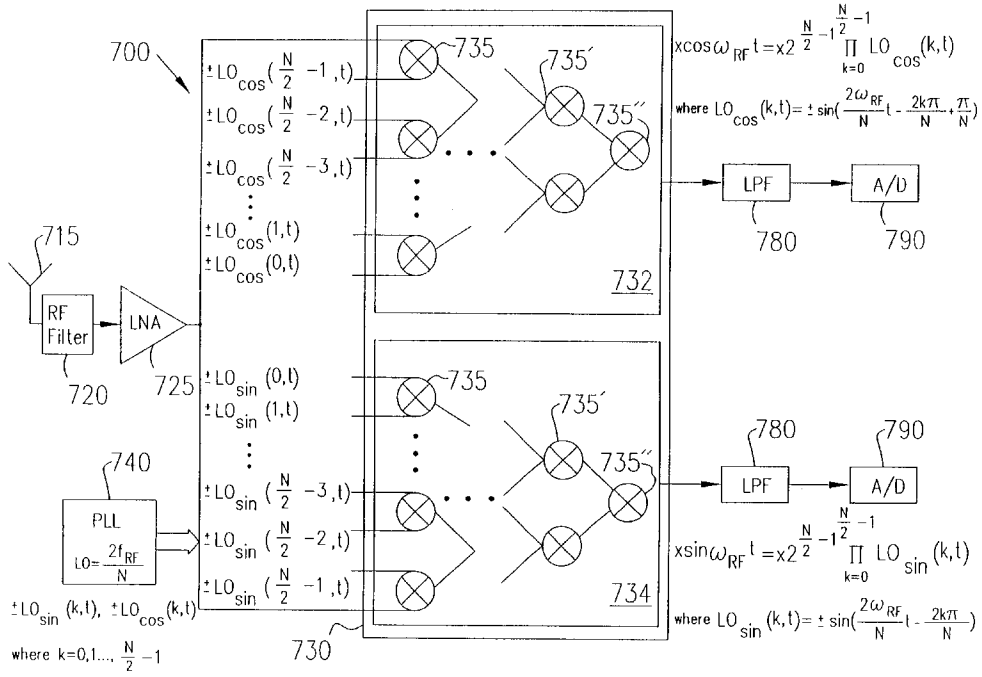

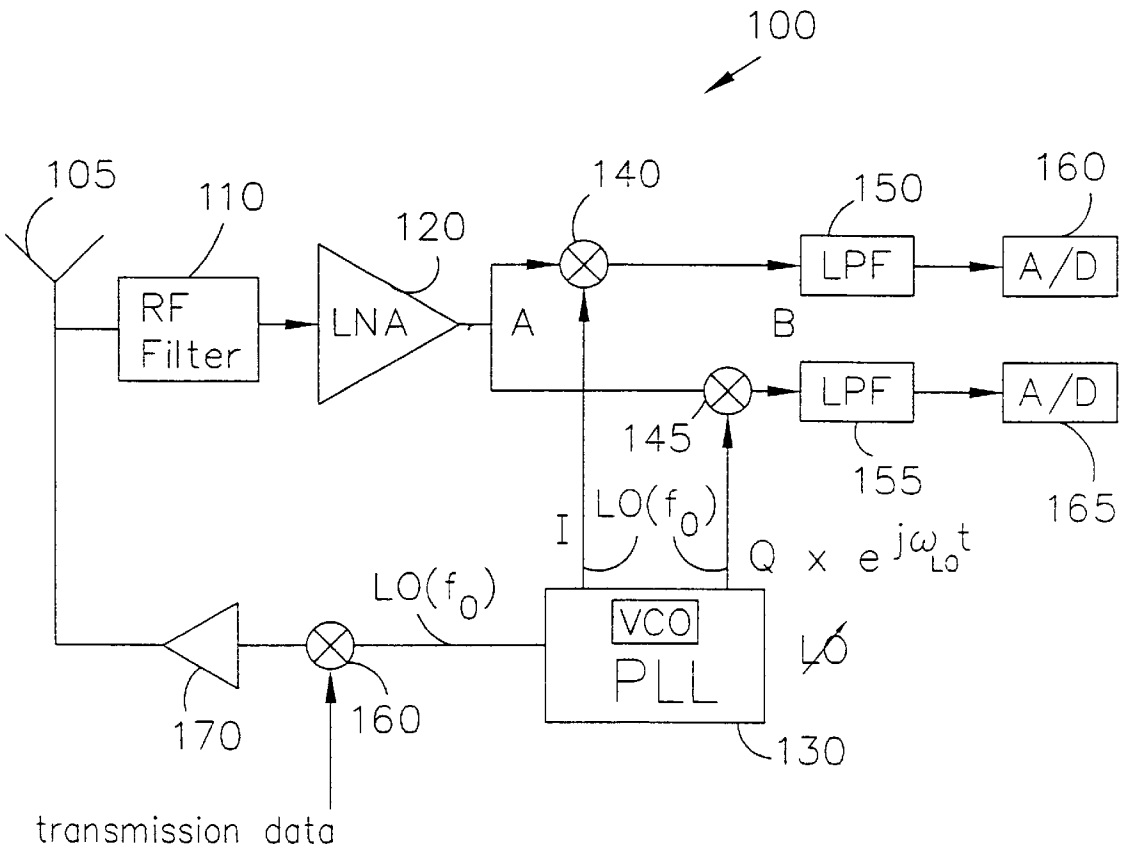
100
105
110
RF Filter
120
LNA
A
140
B
150
LPF
160
A/D
145
LPF
155
A/D
165
I
LO(f_0)
Q x $e^{j\omega_{LO}t}$
LO(f_0)
VCO
PLL
LO
130
170
160
transmission data

FIG. 1

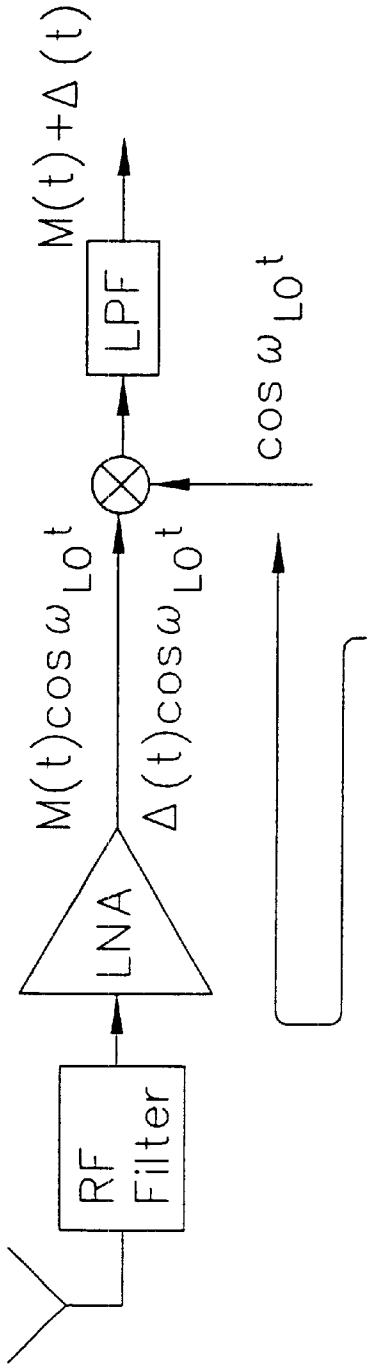
RF Filter
LNA
M(t)cos ω LO t
Δ(t)cos ω LO t
cos ω LO t
LPF
M(t)+Δ(t)

FIG. 2A

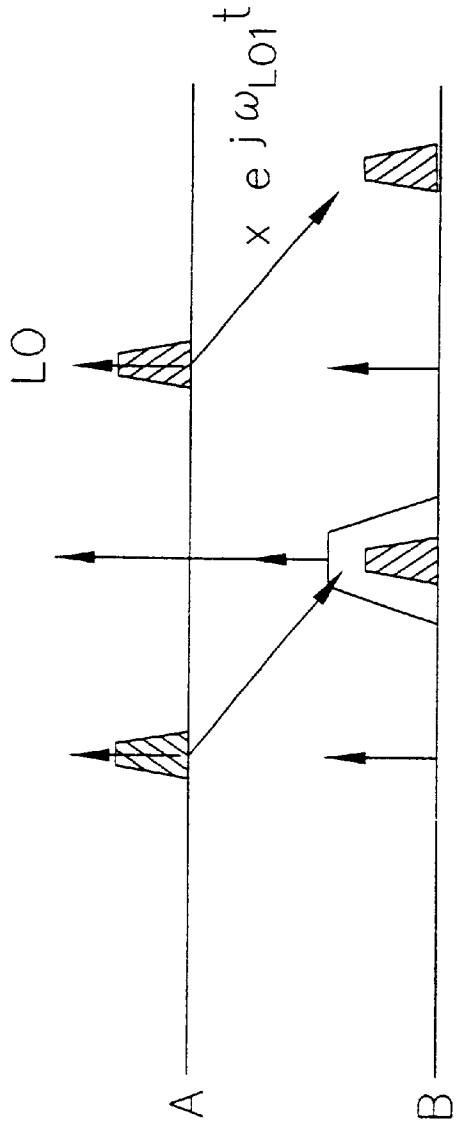
LO
x e j ω LO1 t
A
B

FIG. 2B

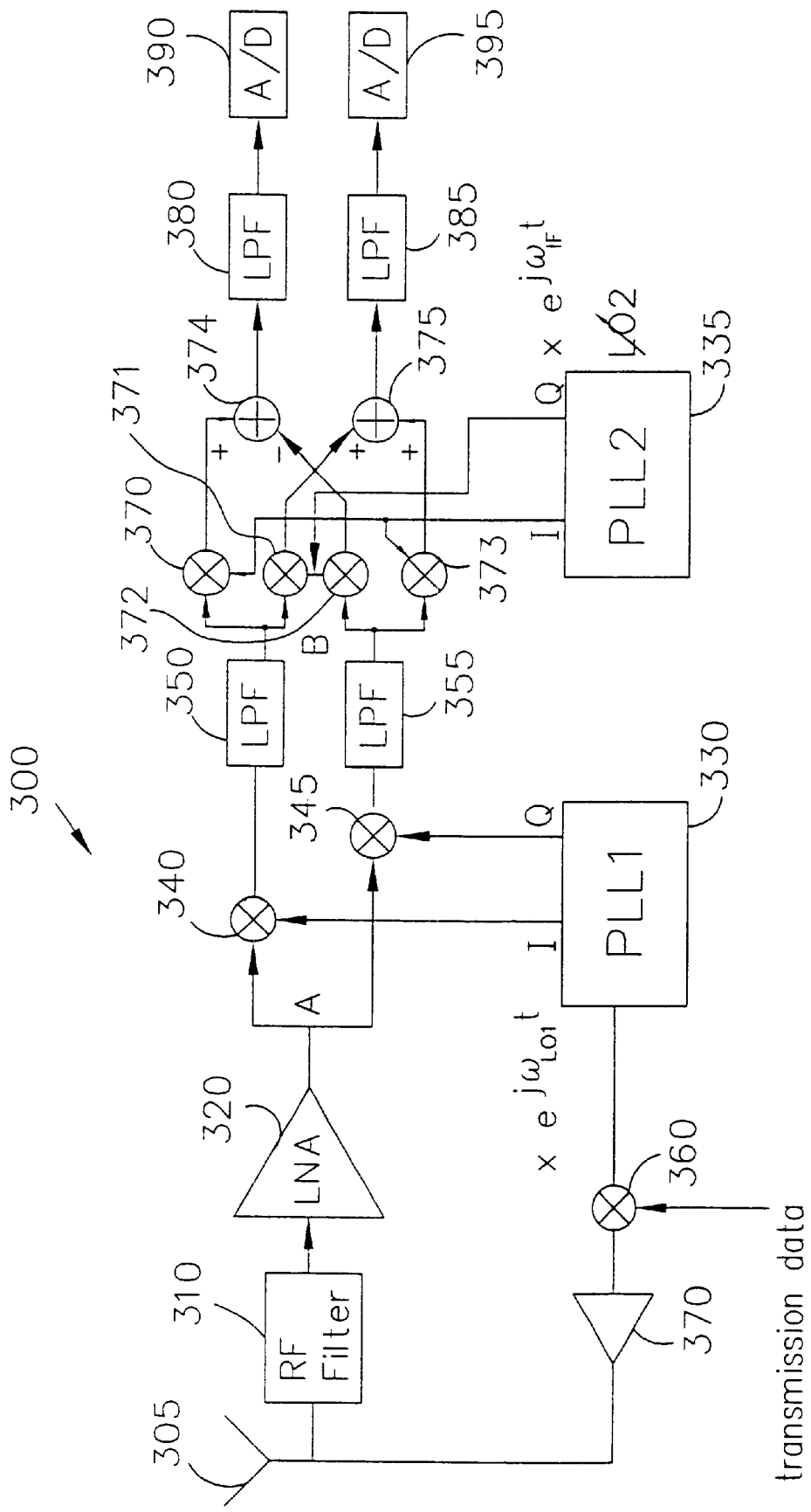
300
305
310
RF Filter
320
LNA
A
340
345
350
LPF
355
LPF
B
370
371
372
373
374
375
380
LPF
385
LPF
390
A/D
395
A/D
PLL1
330
I
Q
PLL2
335
I
Q
$\times e^{j\omega_{Lo1}t}$
$\times e^{j\omega_{IF}t}$
360
370
transmission data

FIG. 3

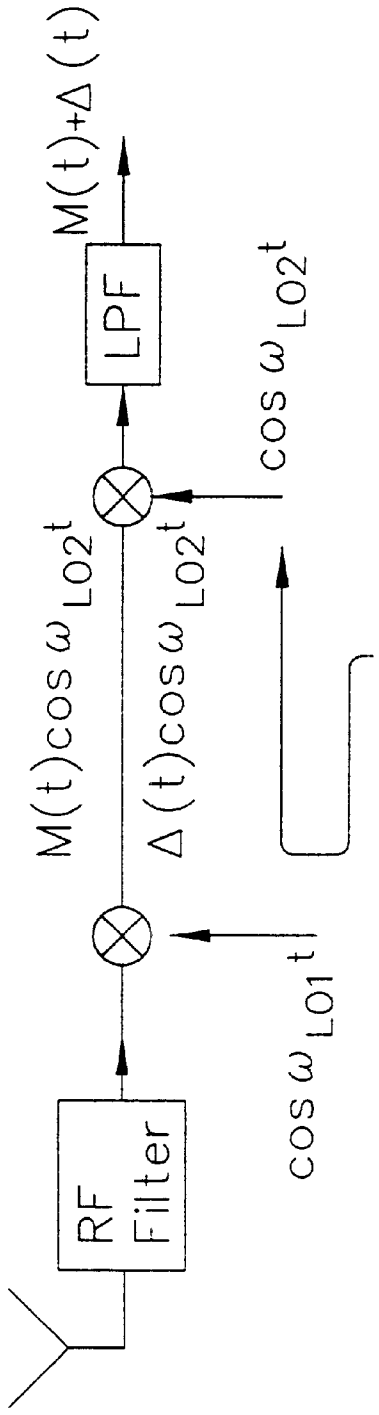
RF Filter
$\cos \omega_{LO1} t$
$M(t)\cos \omega_{LO2} t$
$\Delta(t)\cos \omega_{LO2} t$
LPF
$M(t)+\Delta(t)$
$\cos \omega_{LO2} t$

FIG. 4A

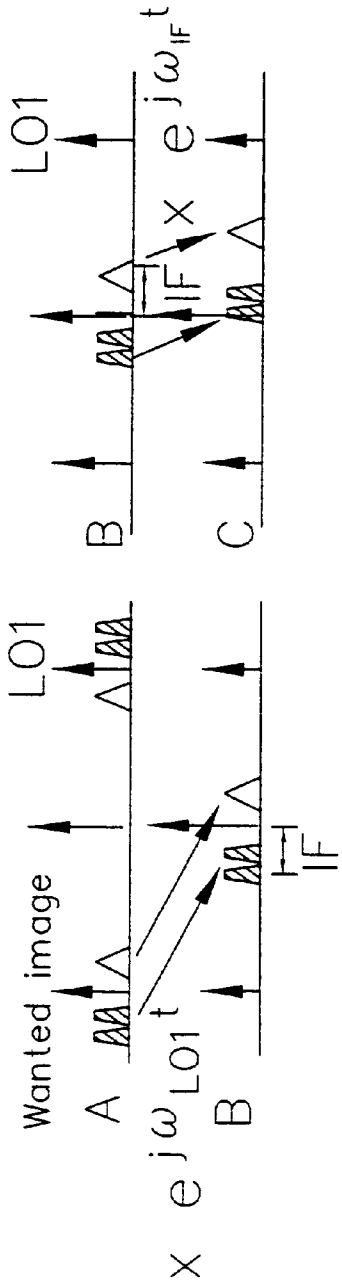
Wanted image
A
B
$\times e^{j\omega_{LO1} t}$
LO1
IF
B
C
LO1
IF
$\times e^{j\omega_{IF} t}$

FIG. 4B

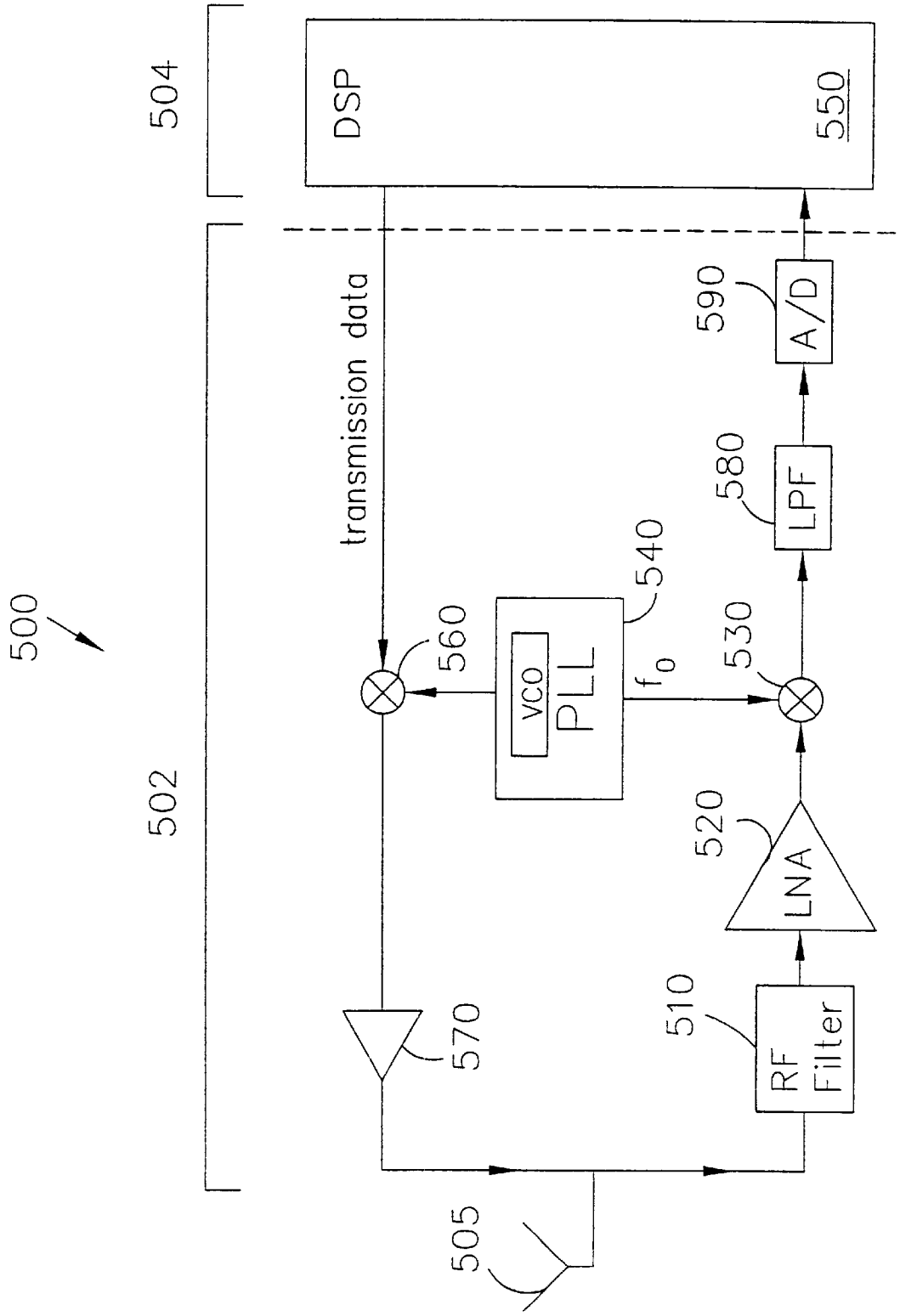
500
502
504
DSP
550
transmission data
590
A/D
580
LPF
540
560
VCO
PLL
f_0
530
520
LNA
510
RF Filter
570
505

FIG. 5

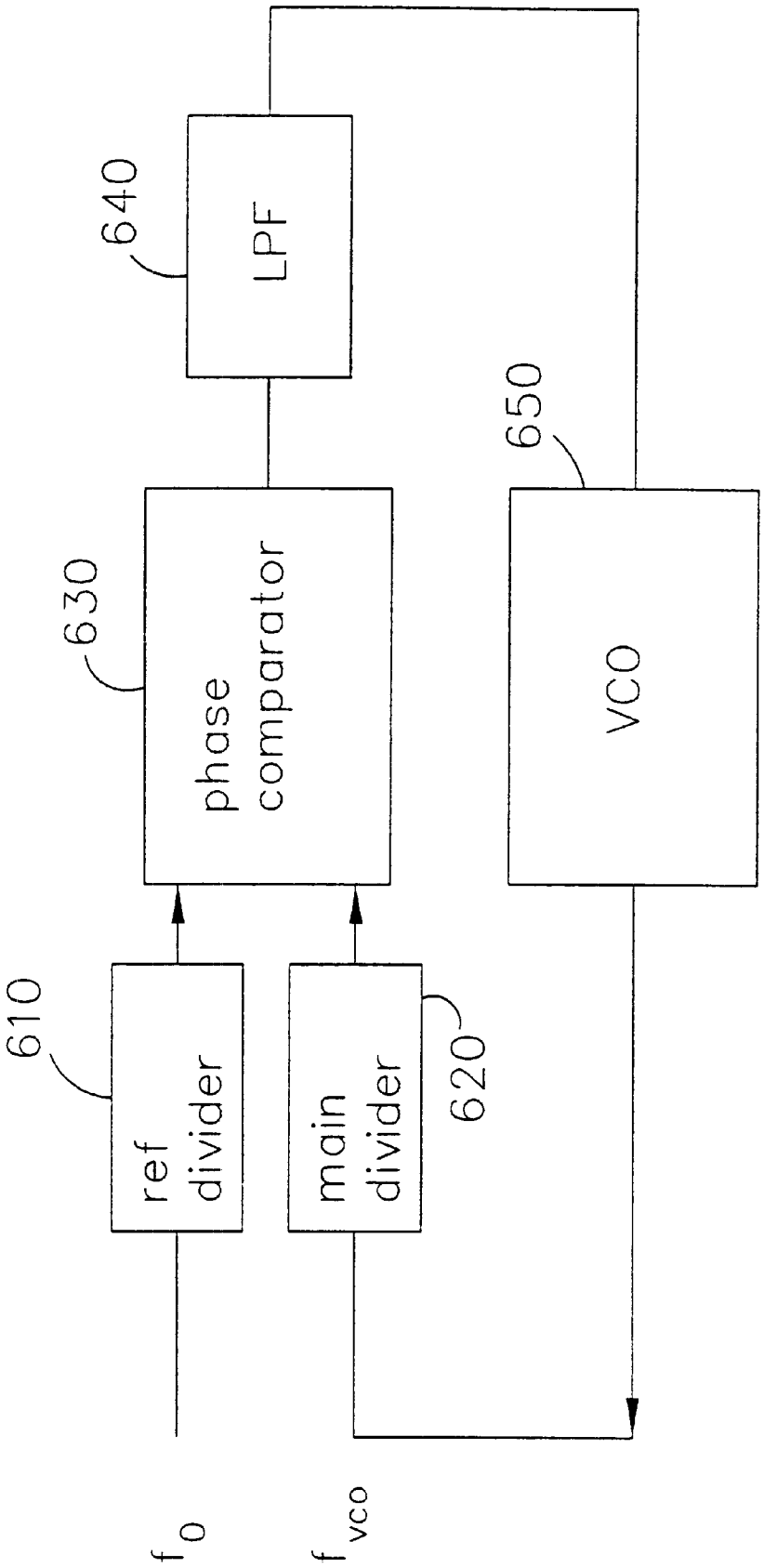
640
LPF
630
phase comparator
610
ref divider
main divider
620
650
VCO
f_0
f_{vco}

FIG. 6

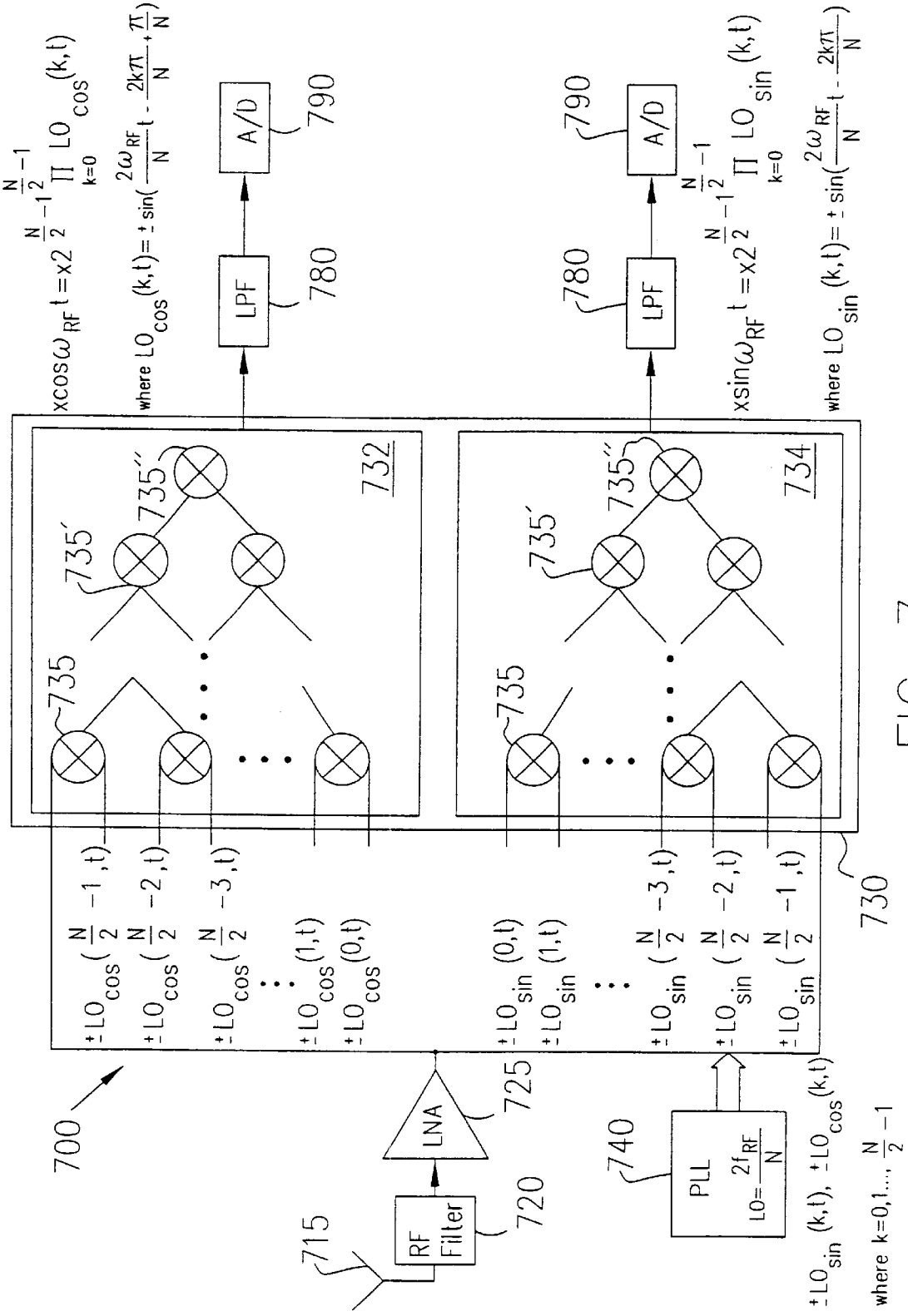
700
715
RF Filter
720
LNA
725
PLL
740
LPF
780
A/D
790
732
734
730
735
735′
735″

FIG. 7

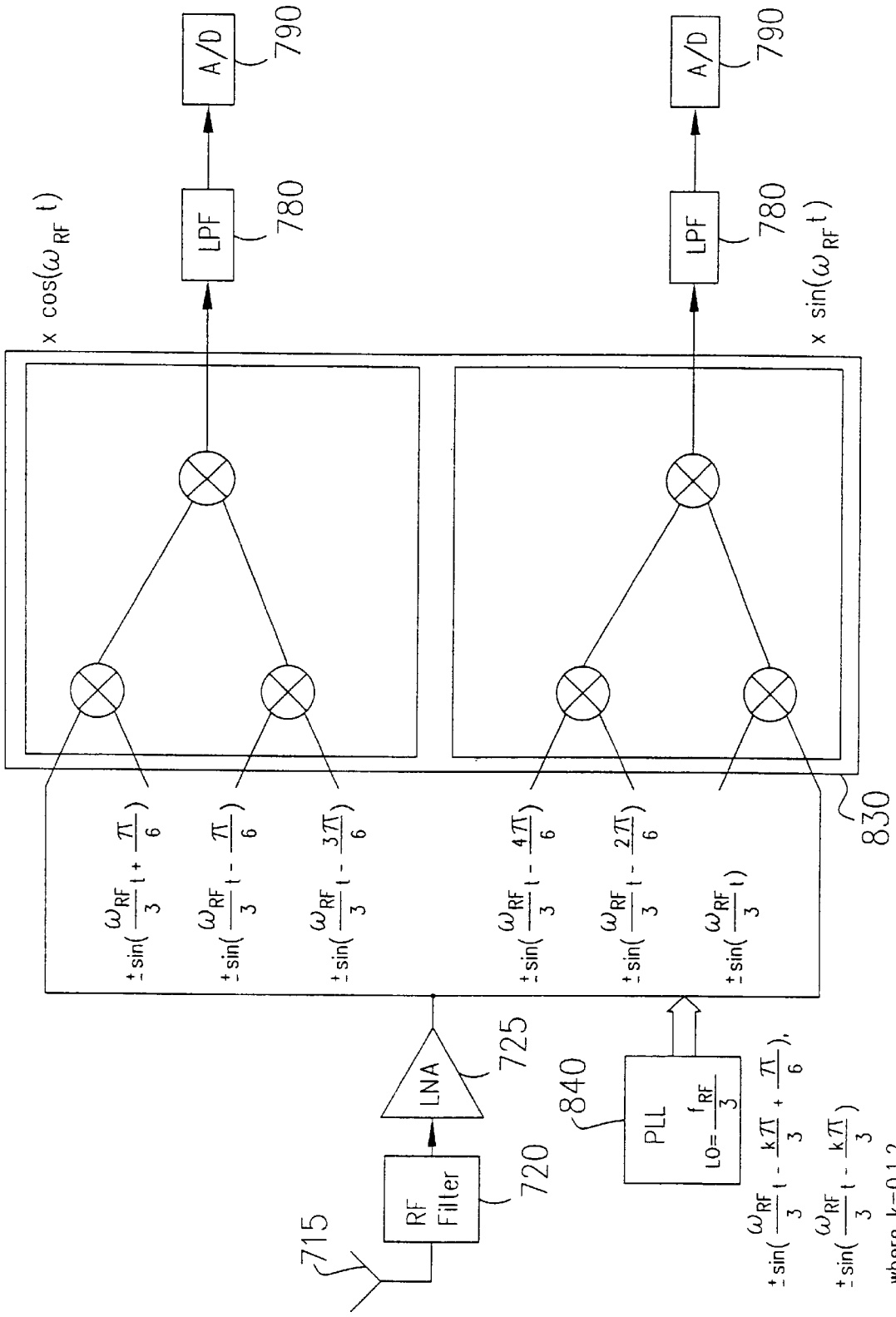
x cos(ω_RF t)
x sin(ω_RF t)
LPF
780
A/D
790
830
LNA
725
RF Filter
720
715
PLL
840
LO= f_RF / 3
where k=0,1,2

FIG. 8

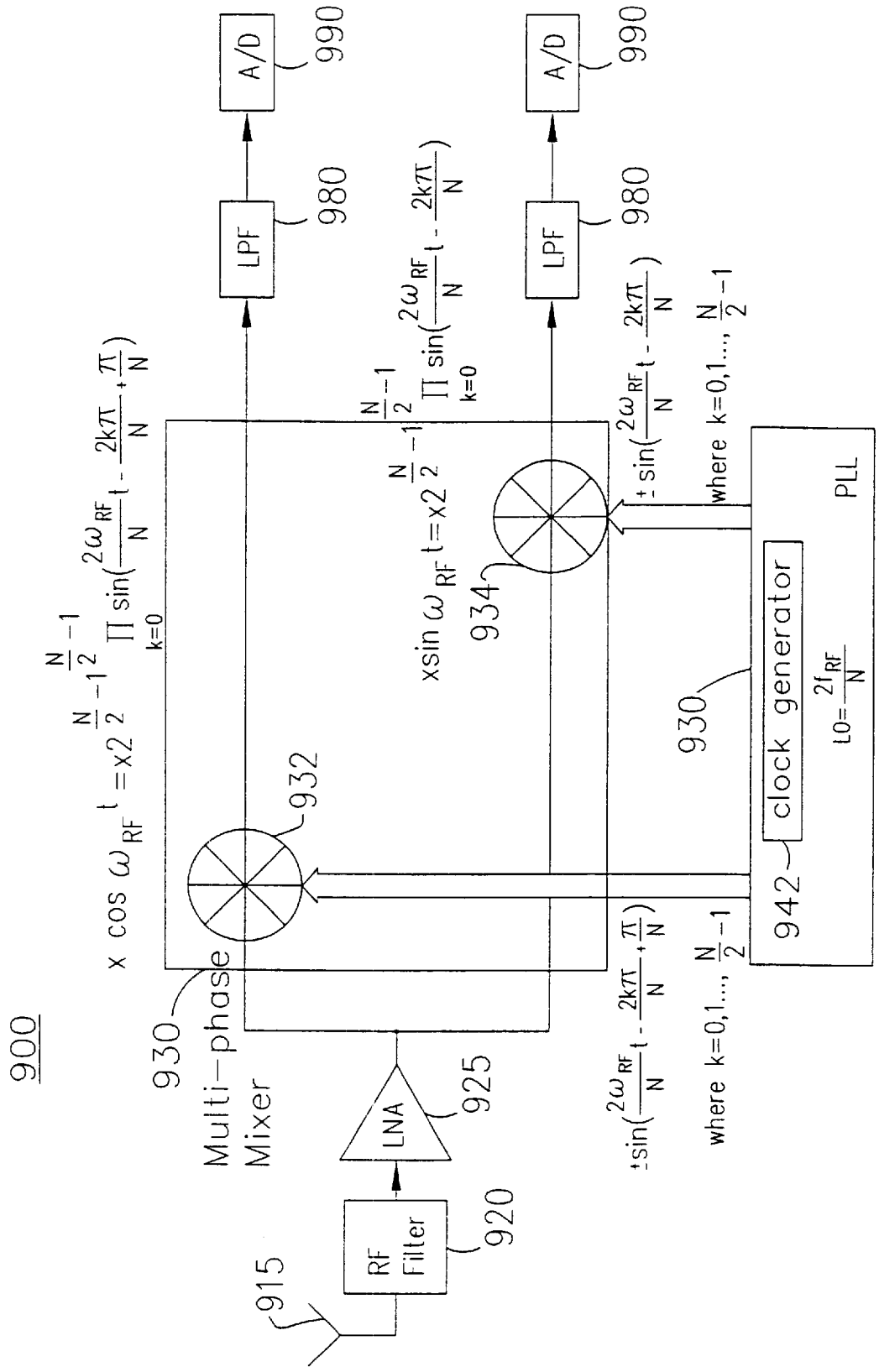
900
915
RF Filter
920
LNA
925
Multi-phase Mixer
930
932
934
x cos ω_RF t = x2^(N/2-1) ∏_{k=0}^{N/2-1} sin(2ω_RF/N t - 2kπ/N + π/N)
x sin ω_RF t = x2^(N/2-1) ∏_{k=0}^{N/2-1} sin(2ω_RF/N t - 2kπ/N)
±sin(2ω_RF/N t - 2kπ/N + π/N)
where k=0,1..., N/2-1
±sin(2ω_RF/N t - 2kπ/N)
where k=0,1..., N/2-1
LPF
980
A/D
990
LPF
980
A/D
990
930
clock generator
942
PLL
LO=2f_RF/N

FIG. 9

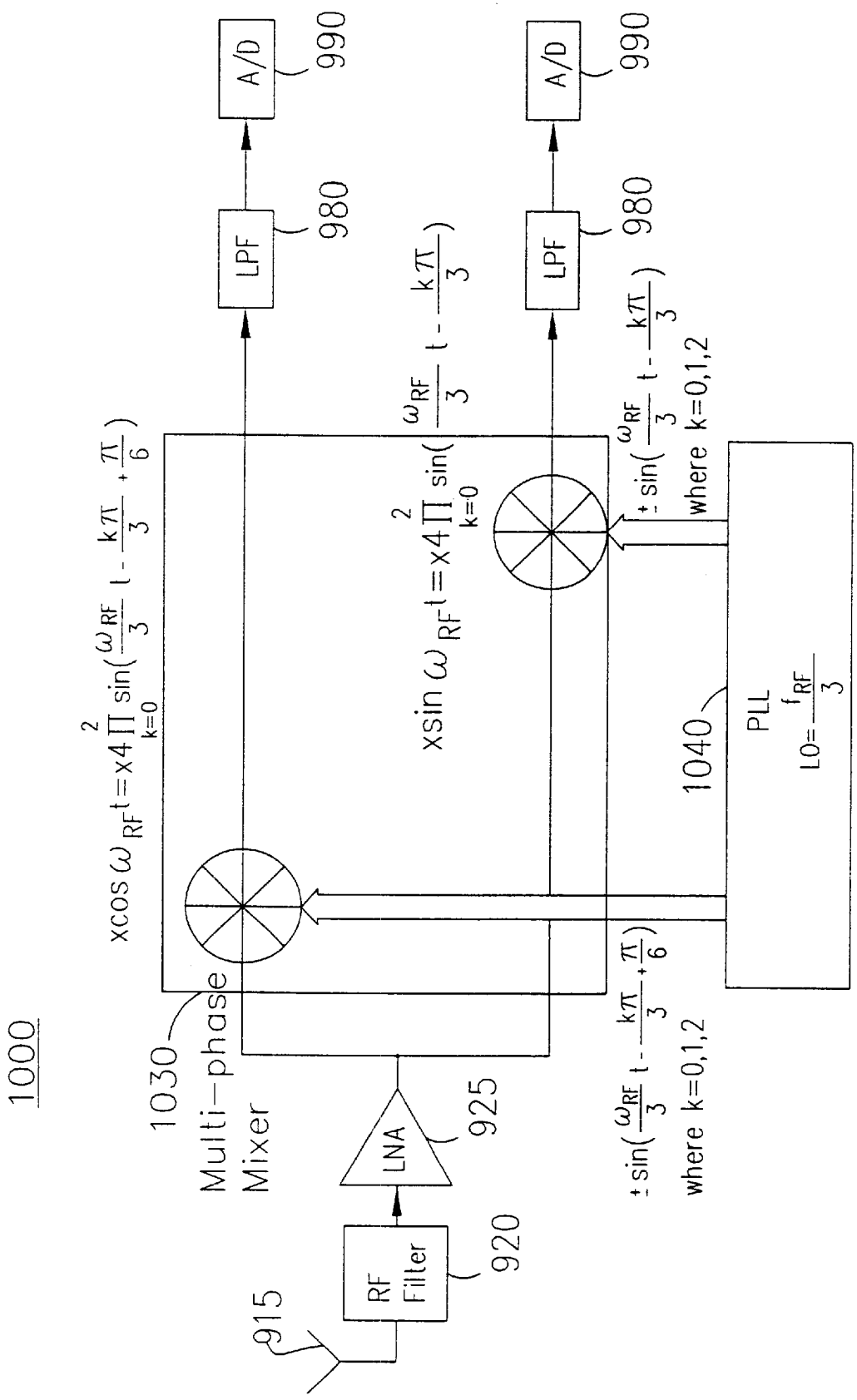
1000
915
RF Filter
920
LNA
925
Multi-phase Mixer
1030
$x\cos\omega_{RF}t = x4\prod_{k=0}^{2}\sin(\frac{\omega_{RF}}{3}t - \frac{k\pi}{3} + \frac{\pi}{6})$
$x\sin\omega_{RF}t = x4\prod_{k=0}^{2}\sin(\frac{\omega_{RF}}{3}t - \frac{k\pi}{3})$
$\pm\sin(\frac{\omega_{RF}}{3}t - \frac{k\pi}{3} + \frac{\pi}{6})$
where k=0,1,2
$\pm\sin(\frac{\omega_{RF}}{3}t - \frac{k\pi}{3})$
where k=0,1,2
LPF
980
LPF
980
A/D
990
A/D
990
PLL
$LO = \frac{f_{RF}}{3}$
1040

FIG. 10

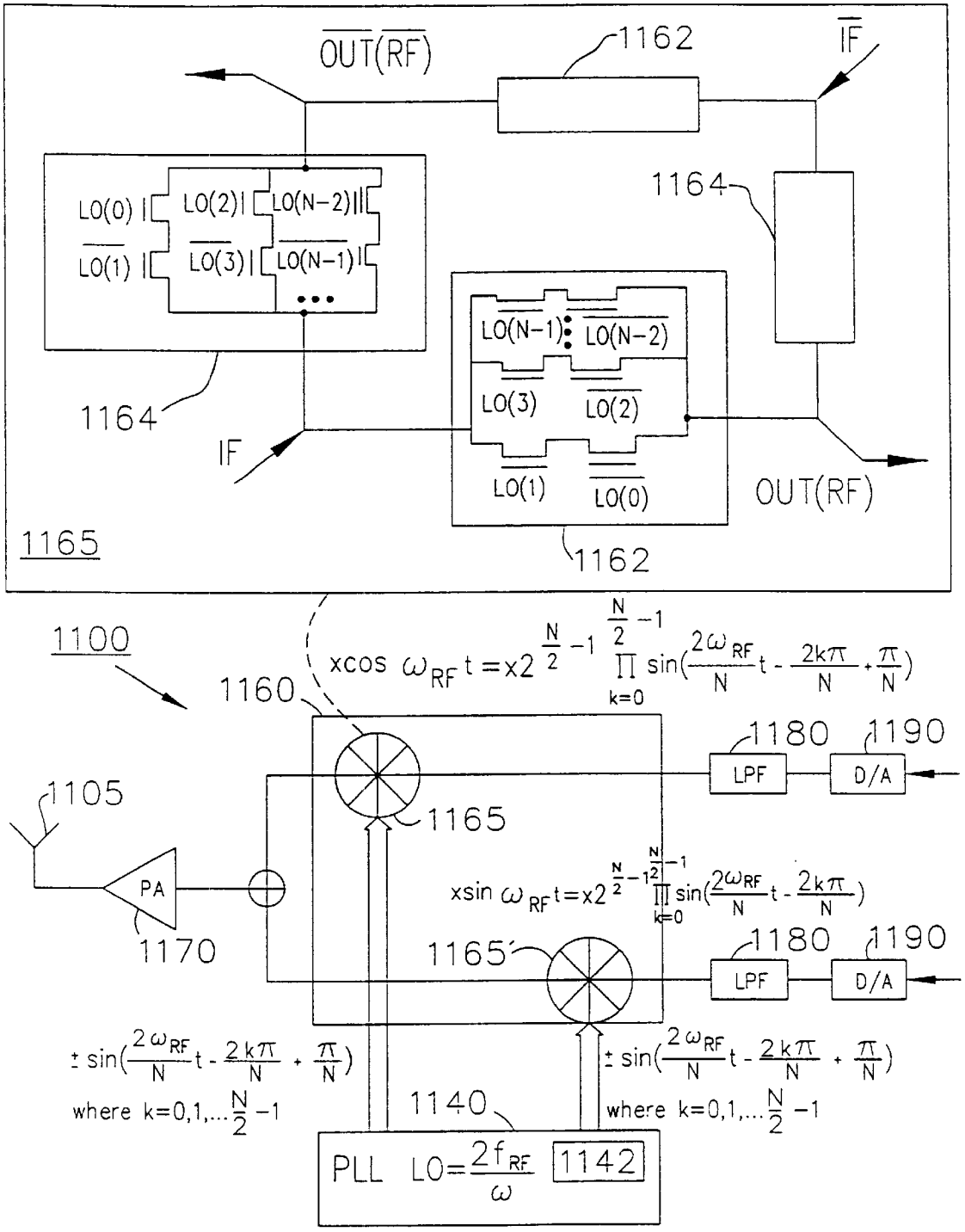

OUT(RF)
1162
IF
1164
LO(0)
LO(2)
LO(N-2)
LO(1)
LO(3)
LO(N-1)
1164
IF
LO(N-1)
LO(N-2)
LO(3)
LO(2)
LO(1)
LO(0)
OUT(RF)
1165
1162
1100
1160
xcos ω_RF t = x2^(N/2 - 1) ∏_{k=0}^{N/2 - 1} sin(2ω_RF/N t - 2kπ/N + π/N)
1180
1190
LPF
D/A
1105
1165
PA
1170
xsin ω_RF t = x2^(N/2 - 1) ∏_{k=0}^{N/2 - 1} sin(2ω_RF/N t - 2kπ/N)
1165'
1180
1190
LPF
D/A
± sin(2ω_RF/N t - 2kπ/N + π/N)
where k=0,1,...N/2 -1
± sin(2ω_RF/N t - 2kπ/N + π/N)
where k=0,1,...N/2 -1
1140
PLL LO=2f_RF/ω
1142

FIG. 11

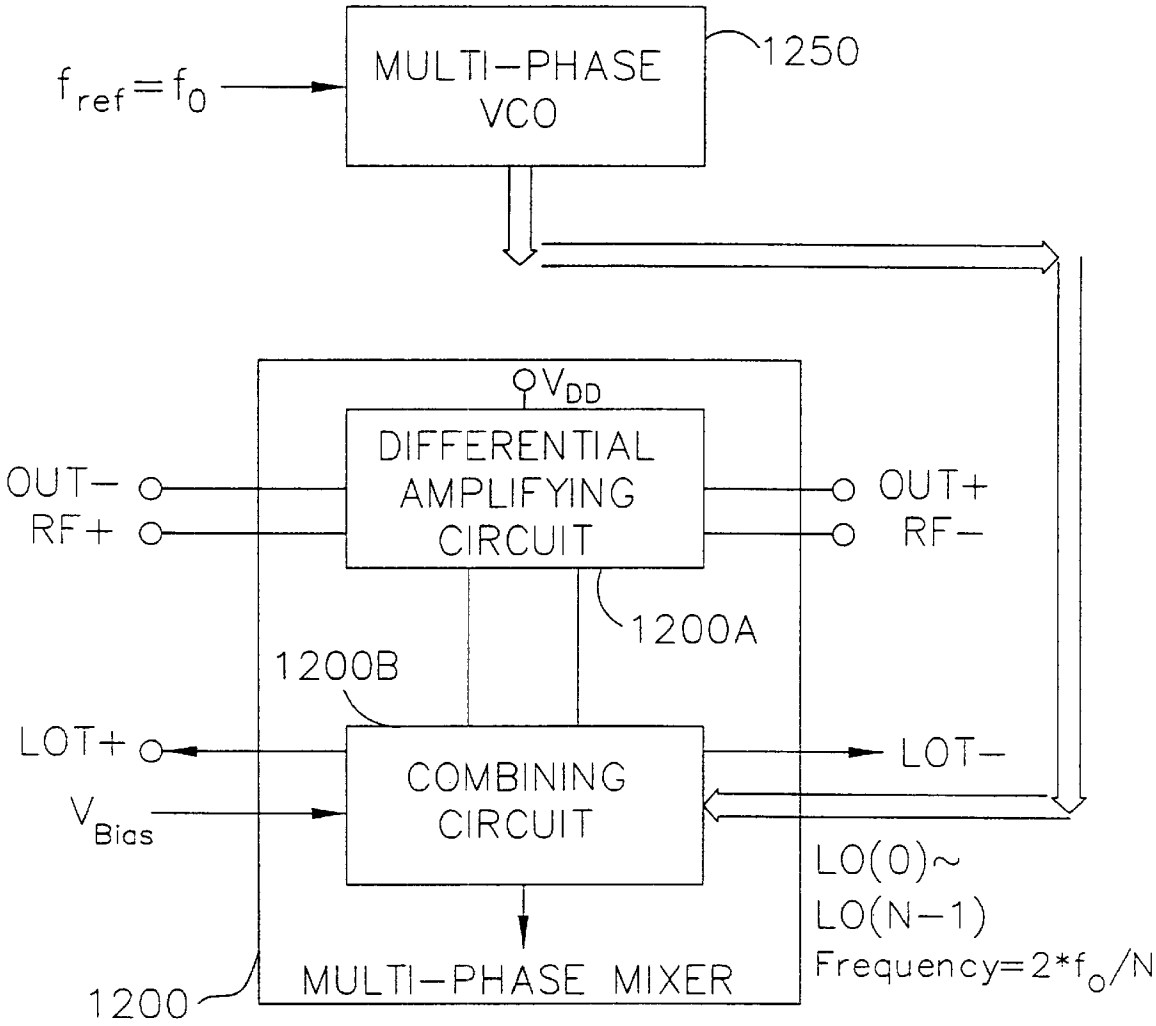
$f_{ref}=f_0$
MULTI-PHASE VCO
1250
V_{DD}
DIFFERENTIAL AMPLIFYING CIRCUIT
OUT−
RF+
OUT+
RF−
1200A
1200B
LOT+
COMBINING CIRCUIT
LOT−
V_{Bias}
LO(0)~
LO(N−1)
Frequency=$2*f_0/N$
MULTI-PHASE MIXER
1200

FIG. 12A

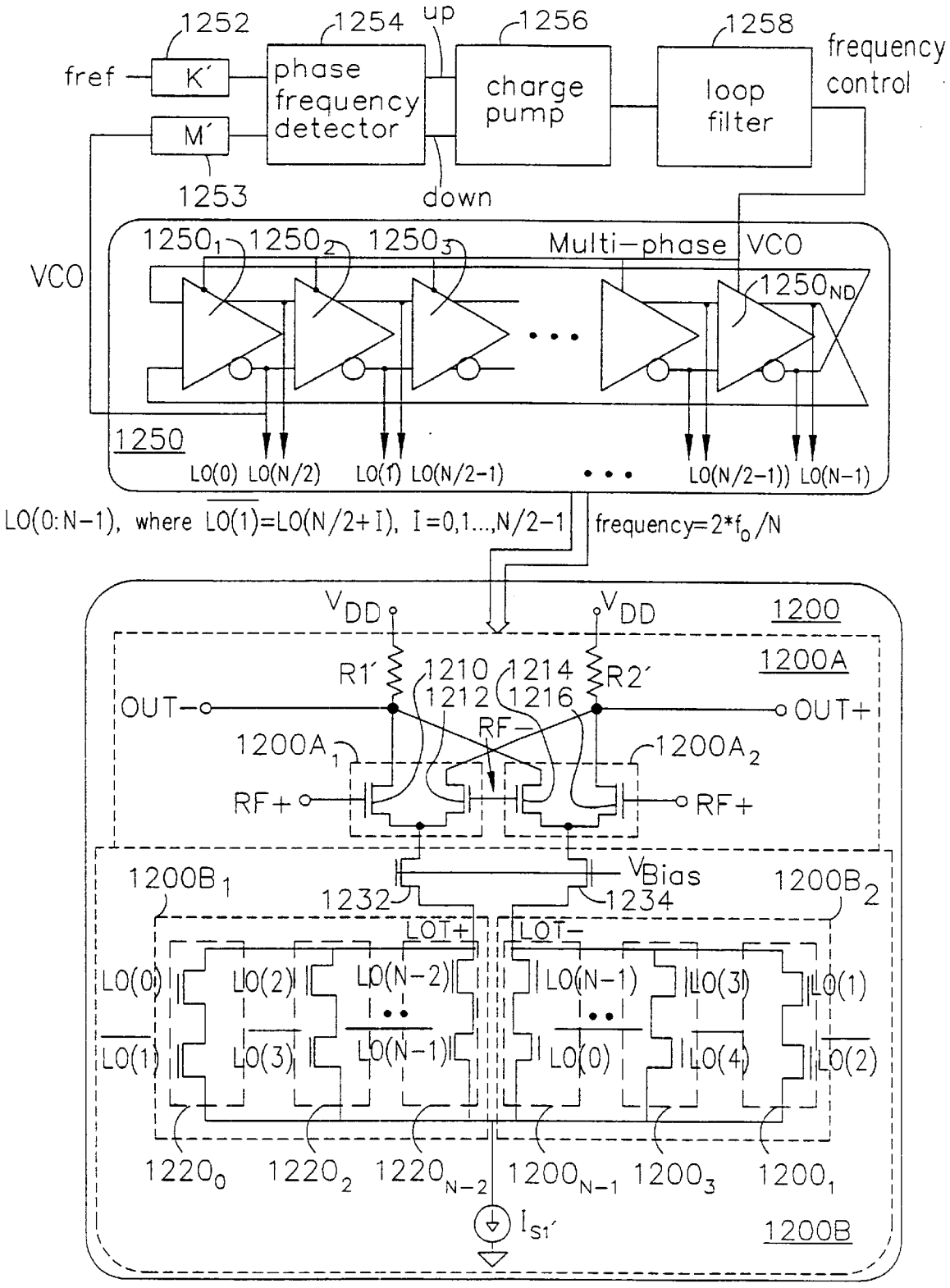

Multi-phase MIXER FIG. 12B

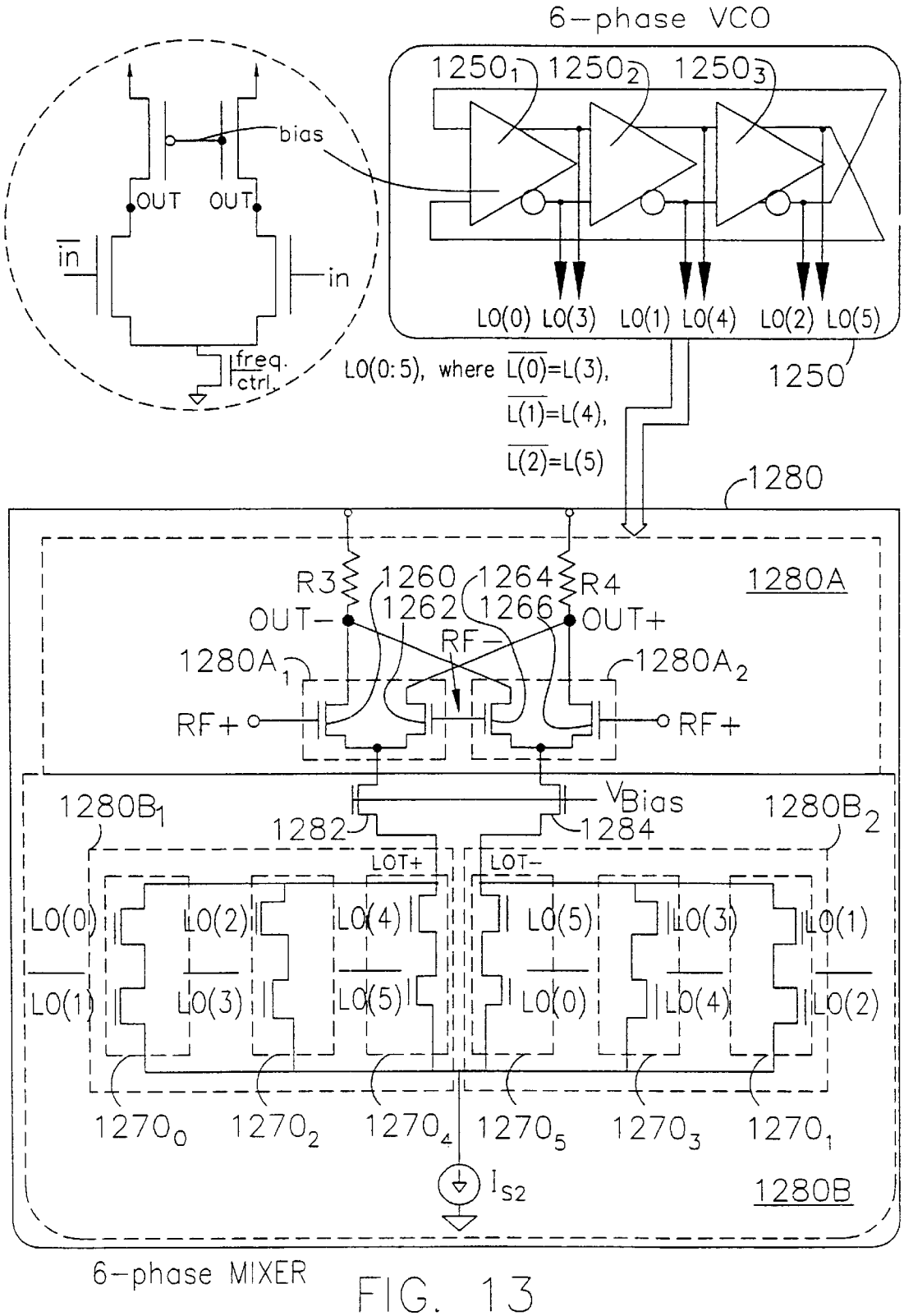
6-phase VCO
1250₁ 1250₂ 1250₃
bias
OUT OUT
in
in
freq. ctrl.
LO(0) LO(3) LO(1) LO(4) LO(2) LO(5)
1250
LO(0:5), where L(0)=L(3),
L(1)=L(4),
L(2)=L(5)
1280
1280A
R3 1260 1264 R4
1262 1266
OUT− OUT+
RF−
1280A₁ 1280A₂
RF+ RF+
VBias
1280B₁ 1280B₂
1282 1284
LOT+ LOT−
LO(0) LO(2) LO(4) LO(5) LO(3) LO(1)
LO(1) LO(3) LO(5) LO(0) LO(4) LO(2)
1270₀ 1270₂ 1270₄ 1270₅ 1270₃ 1270₁
I_S2
1280B
6-phase MIXER

FIG. 13

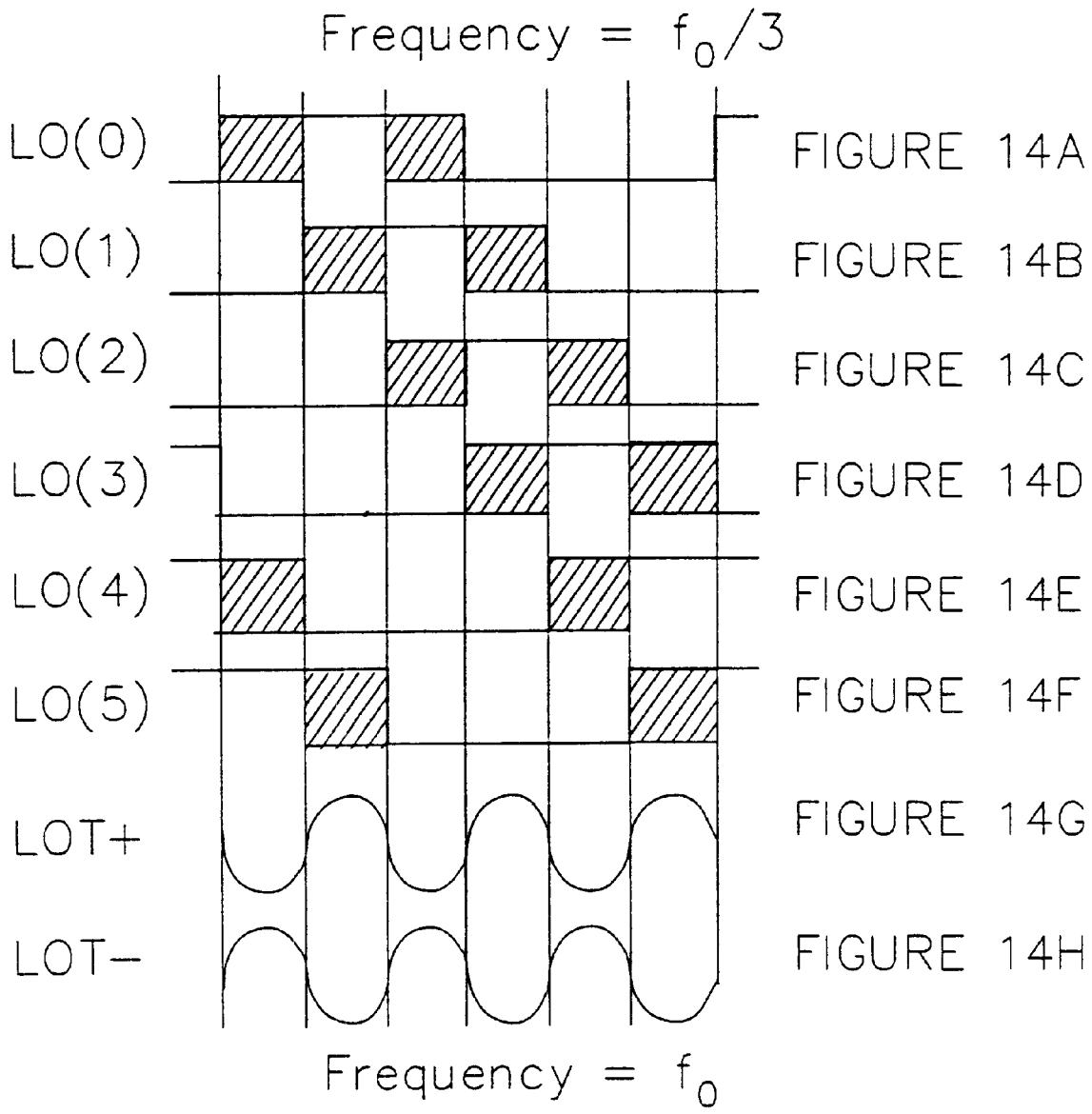
Frequency = $f_0/3$
LO(0)
LO(1)
LO(2)
LO(3)
LO(4)
LO(5)
LOT+
LOT−
FIGURE 14A
FIGURE 14B
FIGURE 14C
FIGURE 14D
FIGURE 14E
FIGURE 14F
FIGURE 14G
FIGURE 14H
Frequency = f_0

FIG. 14

SINGLE CHIP CMOS TRANSMITTER/ RECEIVER

BACKGROUND OF THE INVENTION

1. Field of the Invention

The present invention relates to a communication system, and in particular, to a CMOS radio frequency (RF) communication system.

2. Background of the Related Art

Presently, a radio frequency (RF) communications system has a variety of applications including PCS communication and IMT systems. As such, a CMOS chip ntegration of the system has been pursued to reduce the cost, size and power consumption.

Generally, the RF communication system is composed of RF front-end block and base-band digital signal processing PSP) block. Currently, the base-band DSP block can be implemented with low cost and low power CMOS technology. However, the RF front-end cannot be implemented by CMOS technology because of limitations in speed and noise characteristics, which are below the speed and noise specification of popular RF communication systems.

For example, the PCS hand-phone systems operate at a frequency over 2.0 GHz, but current CMOS technology reliably operates only up to approximately 1.0 GHz in terms of speed and noise. Hence, the RF front-end block is implemented using bipolar or bi-CMOS technology that has better speed and noise characteristics than CMOS technology but is more expensive and consumes more power.

Currently, two different types of RF architecture called "direct conversion" and "double conversion" are used for CMOS RF communication systems. Both architectures have advantages and disadvantages in terms of CMOS implementations.

FIG. **1** is a diagram showing a related art direct conversion RF system **100**. The related art direct conversion CMOS RF communication system **100** includes an antenna **105**, a RF filter **110**, a low noise amplifier (LNA) **120**, a first mixer **140**, a second mixer **145**, a phase-locked loop (PLL) **130**, a first low pass filter (LPF) **150**, a second LPF **155**, a first analog/digital (A/D) converter **160**, a second A/D converter **165**, a third mixer **160** and a power amplifier **170**.

The antenna **105** receives RF signals and selected RF signals are then filtered at the RF filter **110**. The filtered RF signals are amplified with a gain at the LNA **120** and the RF signals passing through the LNA **120** are directly demodulated into base band signals by quadrature multiplication at the first and second mixers **140** and **145**. The PLL **130** preferably generates two types of clock signals, I signals and Q signals using a voltage controlled oscillator (VCO). The I clock signals and the Q clock signals are the same excepting a phase difference. I signals preferably have a phase difference of 90 degrees from Q signals. That is, Q signals are phase shifted with respect to quadrature phase shift I signals. The two sets of signals I and Q are preferably used to increase the ability of the RF system to identify or maintain received information regardless of noise and interference. Sending two types of signals having different phases reduces the probability of information loss or change. A demodulation frequency f_0 in FIG. **1** is equal to a modulation frequency f_0.

As shown in FIG. **1**, the demodulated based band signals have a frequency reduced by the frequency f_0 from an original frequency to pass through the first and second LPF **150** and **155** and eventually become respective signals

required for A/D conversion at the first and second A/D converters **160** and **165**. The digital signals are then transferred to a base-band discrete-time signal processing (DSP) block (not shown). Channel selection is performed by changing frequency f_0 in at the phase-locked loop (PLL) **130**.

As described above, the related art direct conversion RF system **100** has advantages for CMOS RF integration because of its simplicity. In the related at direct conversion RF system only a single PLL is required. Further, in the related art direct conversion RF system high-quality filters are not required. However, related art the direct conversion architecture has disadvantages that make single chip integration difficult or impossible. As shown in FIG. **2**A, clock signals cos $\omega_{LO}t$ from a local oscillator (LO) such as the VCO may leak to either the mixer input or to the antenna where radiations may occur because the local oscillator (LO) is at the same frequency as the RF carriers. The unintentionally transmitted clock signals $\Delta(t)\cos \omega_{LO}t$ signals can reflect off nearby objects and be "re-received" by the mixer again. The low pass filter outputs a signal $M(t)+\Delta(t)$ because of leakages of clock signals. As shown in FIG. **2**B, self-mixing with the local oscillator results in problems such as time variations or "wandering" DC-offsets at the output of the mixer.

FIG. **2**B illustrates time variations and a DC-offset. A denotes a signal before the mixer and B denotes a signal after the mixer. The time-varying DC-offset together with inherent circuit offsets significantly reduce the dynamic range of the receiver portion. In addition, a direct conversion RF system requires a high-frequency, low-phase-noise PLL for channel selection, which is difficult to achieve with an integrated CMOS voltage controlled oscillator (VCO).

FIG. **3** shows a block diagram of a related art RF communication system **300** according to an double conversion architecture that considers all of the potential channels and frequency transistors. As shown in FIG. **3**, the RF communication system **300** includes antenna **305**, a RF filter **310**, a LNA **320**, a first mixer **340**, a second mixer **345**, a first LPF **350**, a second LPF **355**, second stage mixers **370–373**, a first adder **374**, a second adder **375**. The RF communication system **300** further includes a third LPF **380**, a fourth LPF **385**, a first A/D converter **390**, a second A/D converter **395**, first and second PLLs **330** and **335**, a third mixer **360** and a power amplifier **370**.

The mixers **340**, **345** and **370–373** are all for demodulation while the third mixer **360** is for modulation. The first and second mixers **340** and **345** are for a selected RF frequency and the mixers **370–373** are for an intermediate frequency (IF). The first PLL **330** generates clock signals at a high frequency or the RF frequency, the second PLL **335** generates clock signals having a low frequency or the intermediate frequency (IF).

Transmission data are multiplied with the clock signals having the RF frequency from the PLL **330** to have a frequency reduced by the RF frequency from an original transmission data frequency. The output signals of the third mixer **360** are amplified with a gain at the power amplifier **370** and then radiated through the antenna **305** for transmission.

For reception data the antenna **305** receives RF signals and the RF filter **310** filters the RF signals. The filtered RF signals are amplified by the LNA **320** and are converted into IF signals by the quadrature mixers **340**, **345** with a single frequency local oscillator, generally a VCO. The PLL **330** generates clock signals for I signals of the RF signals and

generates clock signals for Q signals of the RF signals. The mixer **340** multiplies the RF signals with the clock signals for the I signals having the RF frequency and the mixer **345** multiplies the RF signals with the Q signals having the RF frequency. The LPFs **350**, **355** are used at an IF stage (i.e., first stage) to remove any frequency components not converted upon conversion to the IF signals, which allows all channels to pass to the second stage mixers **370–373**. All of the channels at the IF stage are then frequency-translated directly to base-band frequency signals by the tunable PLL **335** for channel selection.

Demodulated base band signals C pass low pass filters (LPF) **380** and **385** and are converted into digital data by A/D converters **390** and **395**. The digital data is then transferred into a base-band discrete-time signal processing (DSP) block (not shown).

As described above, the related art double conversion RF system **300** has various advantages. The related art double conversion RF system **300** performs the channel tuning using the lower-frequency, i.e., IF, second PLL **335**, but not the high-frequency, i.e., RF, first PLL **330**. Consequently, the high-frequency RF PLL **330** can be a fixed-frequency PLL that can be more effectively optimized. Further, since channel tuning is performed with the IF PLL **335**, which operates at a lower frequency, the contribution of phase noise into channel selection can be reduced. However, the related art double conversion RF system **300** has various disadvantages to overcome for single chip integration. The related art double conversion RF system **300** uses two PLLs, which are difficult to integrate in a single chip. Further, the frequency of first PLL remains too high to be implemented with CMOS technology, and in particular, with a CMOS VCO. In addition, self-mixing problem still occurs because the second PLL is at the same frequency of the IF desired carrier. FIG. **4**A is a diagram showing leakage of clock signals in the RF communication system **300**. FIG. **4**B is a diagram showing time variation and "wandering" DC-offset because of leaking clock signals $\Delta(t)\cos \omega_{LO2}(t)$ (e.g., self-mixing) in the RF communication system **300** of FIG. **3**.

In FIG. **4**B, the first mixer multiplies the RF signals with clock signals $\cos \omega_{LO1}t$ for RF having a frequency ω_{LO1} and outputs the RF signals with $M(t)\cos \omega_{LO2}t$ having a frequency reduced by the frequency ω_{LO1}. The second mixer multiples the RF signals from the first mixer with clock signals $\cos \omega_{LO2}$ for IF having a frequency ω_{LO2}. However, since the frequency of the output signals of the second mixer is same as the frequency of desired RF carriers before the LPFs. Thus, the output signals of the second mixer may leak to a substrate or may leak to the second mixer again. The time-varying DC-offset, together with inherent circuit offsets significantly reduces the dynamic range of the receiver portion.

SUMMARY OF THE INVENTION

An object of the present invention is to at least substantially obviate problems and disadvantages of the related art.

A further object of the present invention is to fabricate a CMOS RF front end and method for using same that allows one chip integration of an RF communication system.

Another object of the present invention is to provide an RF communication system and method with reduced cost and power requirements.

Still another object of the present invention is to provide a reliable high speed, low noise CMOS RF communication system and method for using same.

Another object of the present invention is to increase a frequency range of a RF front end of an RF communication system.

To achieve at least the above objects and advantages in a whole or in parts and in accordance with the purpose of the present invention, as embodied and broadly described, the structure of the invention includes an antenna for receiving transmitting RF signals, a PLL for generating multi-phase clock signals having a frequency different from a carrier frequency in response to the multi-phase clock signals and a reference signal having the carrier frequency; a demodulation-mixing unit for mixing the received RF signals with the multi-phase clock signals having the frequency different from the carrier frequency to output the RF signals having a frequency reduced by the carrier frequency, and a A/D converting unit for converting the RF signals from the mixing unit into digital signals.

To further achieve the objects in a whole or in parts, in accordance with the purpose of the present invention a method of operating a RF communication system includes an antenna for receiving and transmitting RF signals, a PLL for generating 2N-phase clock signals having a frequency $2*f/N$ smaller than a carrier frequency f_0, wherein N is a positive integer as a phase number, a demodulation mixing unit for mixing the RF signals from the antenna with 2N-phase clock signals from the PLL to output the RF signals having a frequency reduced by the carrier frequency and comprising a plurality of two input mixers, and a A/D converting unit for converting the RF signals from the demodulation mixing unit into digital signals.

Additional advantages, objects, and features of the invention will be set forth in part in the description which follows and in part will become apparent to those having ordinary skill in the art upon examination of the following or may be learned from practice of the invention. The objects and advantages of the invention may be realized and attained as particularly pointed out in the appended claims.

BRIEF DESCRIPTION OF THE DRAWINGS

The invention will be described in detail with reference to the following drawings in which like reference numerals refer to like elements wherein:

FIG. **1** is a circuit diagram showing a related art RF communication system;

FIG. **2**A is a diagram showing clock signal leakage in the circuit of FIG. **1**;

FIG. **2**B is a diagram showing "self mixing" in the circuit of FIG. **2**A;

FIG. **3** is a circuit diagram showing another related art RF communication system;

FIG. **4**A is a diagram showing clock signal leakage in the circuit of FIG. **3**;

FIG. **4**B is a diagram showing "self mixing" in the circuit of FIG. **4**A;

FIG. **5** is a diagram showing a first preferred embodiment of a multi-phase, low frequency (MPLF) RF communication system according to the present invention;

FIG. **6** is a block diagram showing an exemplary PLL circuit;

FIG. **7** is a block diagram showing a receive portion of a RF communication system according to another preferred embodiment of the present invention;

FIG. **8** is a block diagram showing the RF communication system of FIG. **7** with six phases;

FIG. **9** is a block diagram showing a receive portion of a RF communication system according to yet another preferred embodiment of the present invention;

FIG. **10** is a block diagram showing the RF communication system of FIG. **9** with six phases;

FIG. **11** is a block diagram showing a transmit portion of a RF communication to system according to still yet another preferred embodiment of the present invention;

FIG. **12**A is a block diagram showing an exemplary VCO-mixer structure;

FIG. **12**B is a circuit diagram showing the VCO-mixer structure of FIG. **12**A;

FIG. **13** is a circuit diagram showing another exemplary VCO-mixer; and

FIGS. **14**A–**14**H are diagrams showing operational timing waveforms of FIG. **13**.

DETAILED DESCRIPTION OF PREFERRED EMBODIMENTS

A single chip radio frequency (RF) communication system formed using CMOS techniques has various requirements. A CMOS voltage controlled oscillator (VCO) has poor noise characteristics. Accordingly, a CMOS phase-locked loop (PLL) integration is required. However, the number of PLL should be small and the center frequency of a PLL preferably differs sufficiently from a transmitting RF frequency (e.g., preferably low enough) to control a phase noise result using the CMOS VCO. High-quality filters are preferably eliminated because of associated disadvantageous area and power specifications. Also, a number of components in the CMOS RF system should be small or reduced without performance degradation.

A first preferred embodiment of a "multi-phase, low frequency" (MPLF) conversion RF communication system **500** is shown in FIG. **5** and can preferably be formed on a single CMOS chip. The first preferred embodiment can operate at frequencies well above 1 GHz. The phrase "multi-phase low frequency conversion" is used because a single-phase periodic signal having a high frequency is preferably obtained by multiplying multi-phase low-frequency periodic signals together. The first preferred embodiment of the MPLF conversion RF communication system **500** includes a front-end MPLF RF block **502** and a digital signal processing (DSP) block **504**, which is preferably base-band. As discussed above, related art DSP blocks can be formed of CMOS techniques. Accordingly, a detailed explanation of the DSP block **502** including a digital signal processor **550** will be omitted.

The MPLF conversion RF block **502** includes an antenna **505**, an RF filter **510** (e.g., band pass filter), low noise amplifier (LNA) **520** and first and second mixers **530** and **560**, respectively. The MPLF conversion RF block **502** further includes a phase-locked loop (PLL) **540**, a low pass filter (LPF) **580**, an analog/digital (A/D) converter **590** and a power amplifier **570** coupled between the second mixer **560** and the antenna **505**. The PLL **540** generates a modulating and de-modulating clock, i.e., local oscillator(LO), whose frequency is determined by a reference clock (REF f_0).

FIG. **6** shows a block diagram of an exemplary embodiment of the PLL **540**. As shown in FIG. **6**, the PLL **540** includes reference and main dividers **610**, **620**, respectively, phase comparator **630**, loop filter **640** and a voltage controlled oscillator (VCO) **650**. The VCO **650** outputs the LO frequency f_0, which is compared to the reference clock signal by the phase comparator **630**. An output signal of the phase to comparator **630** is passed though the loop filter **640** as a control signal (e.g., frequency) for the VCO **650**. The frequency of the LO is preferably varied according to the communication system. For example, the LO frequency for a personal communication system (PCS) can be 1.8 GHz, and the LO frequency for the IMT **2000** system is 2.0 GHz.

In the first preferred embodiment of the MPLF conversion RF communication system **500**, transmission data is received by the MPLF RF block **502** from the DSP block **504**. The transmission data is modulated by a preferably modulating second mixer **560** at the LO frequency. The modulated data is amplified by the power amplifier **570** and is then output by the antenna **505**.

The low noise amplifier (LNA) **520** receives an input signal from the antenna **505** and amplifies the signal level to output an RF signal. The RF BPF **520** is preferably coupled between the antenna **505** and the LNA **520**. The RF signal is de-modulated by the de-modulating first mixer **530** at preferably the same frequency as the modulation frequency. The output of the de-modulating mixer **530** becomes received data by passing the LPF **580**. The received data is preferably converted to a digital signal by the A/D converter **590** and output to the DSP **550**.

In order to use a single PLL with a center frequency sufficiently lower than a transmitting RF frequency, the first preferred embodiment of the MPLF conversion RF communication system **500** uses a single-phase high-frequency periodic signal (i.e., RF frequency) obtained by multiplying a multi-phase low-frequency periodic signal together. In particular, a high frequency "sine" and "cosine" signal is needed in a RF system, although the present invention is not intended to be so limited. Sine and cosine signals, which have frequencies of W_{RF}, can be obtained by multiplying N-phase sine signals that have frequencies of $2\omega_{RF}/N$ as shown in equations 1 and 2 as follows.

$$\cos\omega_{RF} = 2^{\frac{N}{2}-1}\prod_{k=0}^{\frac{N}{2}-1}\sin\left(\frac{2\cdot\omega_{RF}}{N}\cdot t-\frac{2\cdot k\cdot\pi}{N}+\frac{\pi}{N}\right) \tag{1}$$

$$\sin\omega_{RF} = 2^{\frac{N}{2}-1}\prod_{k=0}^{\frac{N}{2}-1}\sin\left(\frac{2\cdot\omega_{RF}}{N}\cdot t-\frac{2\cdot k\cdot\pi}{N}\right) \tag{2}$$

A multiplication factor is not "N" but "N/2" because the remaining N/2 sine signals can be an inverted version of the first N/2 sine signals. The inverted signals are preferably used to make differential signals for a differential input mixer.

FIG. **7** shows a receive portion **700** of a second preferred embodiment of a RF block according to the present invention. The second preferred embodiment of the receive portion **700** can be used in the first preferred embodiment of the MPLF conversion RF communication system. As shown in FIG. **7**, the receive portion **700** includes an antenna **715**, an RF filter **720**, LNA **725** and demodulation mixer **730**. The receive portion **700** of the RF block further includes a PLL **740**, a low pass filter **780** and a analog/digital converter **790**. The PLL **740** generates a de-modulating clock, i.e., local oscillator (LO) equal to $2*f_0/N$, whose frequency is determined by a reference clock (not shown). The antenna **715**, the RF filter **720**, the LNA **725**, the LPF **780** and the analog/digital converter **790** operate similar to the first preferred embodiment, and accordingly, a detailed explanation is omitted.

The receive portion **700** of the RF block uses just one PLL. The PLL **740** uses a frequency of $2*f_0/N$. The PLL **740** generates in total 2N-phase clock signals. The PLL **740**

generates N-phase$\pm LO_{cos}$(k,t) and N-phase$\pm LO_{sin}$(k,t) signals, which are preferably determined as shown in equations 3–4.

$$\pm LO_{\cos}(k, t) = \pm \sin\left(\frac{2\omega_{RF}}{N}t - \frac{2k\pi}{N} + \frac{\pi}{N}\right) \quad (3)$$

$$\text{where, } k = 0, 1, 2 \ldots \frac{N}{2} - 1$$

$$\pm LO_{\sin}(k, t) = \pm \sin\left(\frac{2\omega_{RF}}{N}t - \frac{2k\pi}{N}\right) \quad (4)$$

$$\text{where, } k = 0, 1, 2 \ldots \frac{N}{2} - 1$$

As shown in FIG. **7**, the receive portion **700** of the RF block has the demodulating mixer **730** divided into upper and lower mixer arrays **732** and **734**. Each of the upper and lower mixer arrays **732** and **734** includes a plurality of conventional 2-input mixers **735**. The upper mixer array **732** multiplies N-phase (N/2: un-inverted, N/2: inverted) with a frequency of $(2\omega_{RF})/N$, sine signals and a RF signal, which is equivalent to multiplying single phase, frequency of ω_{RF}, cosine signals and the RF signal. Both un-inverted and inverted sine signals are needed for inputting to a single mixer because the conventional 2-input mixer requires differential input. The lower mixer array **734** multiplies N-phase (N/2: un-inverted, N/2 inverted) with a frequency of ω_{RF}/N, sine signals and the RF signal, which is equivalent to multiplying single phase, frequency of ω_{RF} sine signals and the RF signal. Thus, the receive portion **700** of the RF block functions equivalently with the direct conversion architecture shown in FIG. **1**. However, the receive portion **700** according to the present invention uses the N-phase, frequency of $2\omega_{RF}/N$, sine signals in de-modulation in contrast to the single phase, frequency of ω_{RF} sine signal.

As described above, the PLL **740** generates 2N-phase clock signals. N-phase clock signals are N-phase sine signals and N-phase clock signals are N-phase cosine signals. Both the N-phase signals includes N/2 non-inverted signals and N/2 inverted signals. The N-phase sine signals are input to the upper mixer array **732** together with the RF signals and the N-phase sine signals are input to the lower mixer array **734**, together with the RF signals. The upper and lower mixer arrays **732** and **734** have a plurality of mixers **735** and a M number of stages respectively. The M number of stages includes a first stage, (e.g., **735**), a second stage (e.g., **735'**), . . . , a M-**1**th stage, and a Mth stage (e.g., **735"**). Each stage of each mixer array includes at least one mixer having two inputs. The number K**1** of mixer at the first stage is the highest number of stages. The last stage, the Mth stage has the lowest number (KM) of mixers among the whole stages. The relative order of the mixer-number among the stages may be expressed the inequality K**1**)K**2**)K**3**)K**4** . . . KM-**1**) KM.

Each mixer **735** has two inputs. Each input has an inverted signal and a non-inverted signal of the inverted signal because each input of the mixers **735** inputs two different signals. As described above, the RF signals from the LNA **725** and the N-signals from the PLL **746** are used as the input signals of mixers **735** at a first stage. Output signals of mixers **735** at the first stage are used as input signals of mixers **735'** at the second stage. In a same manner, output signals of mixers at the M-**1**th stage are used as two input signals of a mixer **735"**, which is a single mixer at the Mth stage of the upper mixer array **732** and the lower mixer array **734**.

FIG. **8** shows a 6-phase example for the receive portion **700** of an MPLF conversion RF communication system that uses the conventional 2-input mixer. As shown in FIG. **8**, a PLL **840** generates 12-phase sine signals, which are transmitted to a mixer **830**. The phase difference between adjacent two signals is $\pi/6$ (i.e.,$2\pi/12$). Phases (**0**,**2**,**4**,**6**,**8**,**10**) are used as inputs to an upper mixer **832** and multiplied together with the preferably RF input, which is equivalent with multiplying cos (ω_{RF}t) and the RF input. Phases (**1**,**3**,**5**,**7**,**9**, **11**) are input to a lower mixer **834** and multiplied together with the preferably RF input, which is equivalent with multiplying sin (ω_{RF}t) and the RF input. Accordingly, the frequency of the clock signals is f_0 when the clock signals are multiplied with the RF signals.

The PLL **840** includes a clock generator such as a voltage controlled source (VCO) and thus generates 12-phase clock signals for the multiplication with the RF signals upon demodulation. The generated clock signals have a frequency $2*f_0/P$ (P=phase number) lower than a frequency f_0 to be multiplied with the RF signals. The clock signals from the PLL **840** may have the lower frequency $2*f_0/P$ because the PLL **840** generates multi-phase clock signals phase **0**, . . . , phase **12**. Filtered RF signals are amplified with a gain in the LNA **725** and multiplied with the multi-phase clock signals, **12** sine signals in the mixer array **830** for modulation. The RF signals multiplied with the clock signals have a frequency lower than an original frequency by a final frequency f_0 of the clock signals. The initial frequency $2*f_0/P$ of the clock signals from the PLL **840** is changed to the frequency f_0 for multiplication with the RF signals in the mixer (e.g., mixer array) **830**. Therefore, the upper mixer array **832** and the lower mixer array **834** combine the clock signals having the frequency $2*f_0/P$ and multiply the clock signals having frequency f_0 with the RF signals. Consequently, the RF signals having a frequency reduced by frequency f_0 pass through the LPFs **780** and the A/D converters **790** and are sent to a DSP part (not shown). The 12 phase sine signals generated by the PLL **840** are shown as follows:

Phase 0: $\sin\left(\frac{\omega_{RF}}{3}t + \frac{\pi}{6}\right)$

Phase 7: $-\sin\left(\frac{\omega_{RF}}{3}t\right)$

Phase 9: $-\sin\left(\frac{\omega_{RF}}{3}t - \frac{2\pi}{6}\right)$

Phase 1: $\sin\left(\frac{\omega_{Rf}}{3}t\right)$

Phase 10: $-\sin\left(\frac{\omega_{RF}}{3}t - \frac{3\pi}{6}\right)$

Phase 2: $\sin\left(\frac{\omega_{RF}}{3}t - \frac{\pi}{6}\right)$

Phase 11: $-\sin\left(\frac{\omega_{RF}}{3}t - \frac{4\pi}{6}\right)$

Phase 3: $\sin\left(\frac{\omega_{RF}}{3}t - \frac{2\pi}{6}\right)$

Phase 4: $\sin\left(\frac{\omega_{RF}}{3}t - \frac{3\pi}{6}\right)$

Phase 5: $\sin\left(\frac{\omega_{RF}}{3}t - \frac{4\pi}{6}\right)$

Phase 6: $-\sin\left(\frac{\omega_{RF}}{3}t + \frac{\pi}{6}\right)$

Phase 8: $-\sin\left(\frac{\omega_{RF}}{3}t - \frac{\pi}{6}\right)$

FIG. **9** shows a MPLF conversion receive portion **900** of an RF block according to a third preferred embodiment of the present invention. The third preferred embodiment of the receive portion **900** can be used in the first preferred

embodiment of the MPLF conversion RF communication system. As shown in FIG. **9**, the receive portion **900** includes an antenna **915**, a RF filter **920**, a LNA **925** and mixer **930**. The receive portion **900** of the RF block further includes a PLL **940**, a LPF **980** and an A/D converter **990**. The PLL **940** preferably generates a de-modulating clock, i.e., local oscillator (LO) preferably equal to $2*f_{RF}/N$, whose frequency is determined by a reference clock (not shown). The antenna **915**, the RF filter **920**, the LNA **925**, the LPF **980** and the A/D converter **990** operate similar to the first preferred embodiment, and accordingly, a detailed explanation is omitted.

The receive portion **900** of the RF block uses just one PLL. The PLL **940** includes a clock generator **942** preferably using a frequency of $2*f_{RF}/N$. The clock generator **942** preferably generates N-phase$\pm LO_{cos}(k,t)$ and N-phase$\pm LO_{sin}(k,t)$ signals, which total 2N phase signals. The clock generator **942** is preferably a multi-phase VCO and the mixing section **930** is also a multi-phase mixer.

As shown in FIG. **9**, the receive portion **900** of the RF block uses multi-phase mixers **932** and **934**. The upper multi-phase mixer **932** replaces the function of the upper mixer array **732** and the lower multi-phase mixer **934** replaces the function of the lower mixer array **734**.

The PLL **940** can generate clock signals for modulation and demodulation. The clock generator **942** of the PLL **940** generates clock signals having a frequency $2*f_0/N$ (N=phase number) for demodulation and modulation. The clock generator **942** generates clock signals with frequency $2*f_0/N$ because of frequency limits according to CMOS device implementation. For a CMOS implementation of a RF communication system, a frequency of the clock generator **942** should be different and lower than that of the mixing section **930**.

FIG. **10** shows a 6-phase example of a receive portion **1000** of an MPLF conversion RF communication system that uses a multi-phase input mixer. As shown in FIG. **10**, a PLL **1040** generates 12-phase sine signals, which are transmitted to a multi-phase mixer **1030**. Phases (**0**,**2**,**4**,**6**,**8**,**10**) are used as inputs to an upper mixer **1032** and multiplied together with a preferably RF input, which is equivalent with multiplying cos ($\omega_{RF}t$) and the RF input. Phases (**1**,**3**,**5**,**7**,**9**, **11**) are input to a lower mixer **1034** and multiplied together with a preferably RF input, which is equivalent with multiplying sin ($\omega_{RF}t$) and the RF input.

FIG. **11** shows a MPLF conversion transmit portion **1100** of an RF block according to a fourth preferred embodiment of the present invention. The fourth preferred embodiment of the transmit portion **1100** could be used in the first preferred embodiment of the MPLF conversion RF communication system. As shown in FIG. **11**, the receive portion **1100** includes an antenna **1105**, mixer **1160**, a PLL **1140**, LPFs **1180**, D/A converters **1190** and a power amplifier **1170** coupled between the mixer **1160** and the antenna **1105**. The PLL **1140** generates clock signals using a clock generator **1142**. The clock generator **1142** preferably generates a modulating and de-modulating clock signal using a local oscillator(LO), whose frequency is determined by a reference clock (f_{RF}).

In the fourth preferred embodiment of the transmit portion **1100** of an RF block, digital data is received from a DSP block (not shown) and converted into an analog signal by the D/A converter **1190** and filtered by the LPF **1180**. The mixer **1160** preferably receives multi-phase low frequency (i.e., $2*f_0/N$) clock signals from the PLL **1140** and a base band signal from the LPF **1180** to generate a modulated RF signal whose frequency is f_{RP}. The mixer **1160** preferably includes multi-phase up conversion mixers **1165**. FIG. **11** also shows a block diagram of an exemplary embodiment of the multi-phase up conversion mixer **1165**. As shown in FIG. **11**, the mixer **1165** uses two control circuit blocks **1162** and **1164**, which receive the clock signals LO(**0**, . . . , N−1), /LO(**0**, . . . , N−1), to generate the modulated RF signal. The modulated RF data is amplified by the power amplifier **1170** and is then output by the antenna **1105**.

As described above, a mixer for demodulation reduces a high frequency of RF signals received with a frequency of clock signal by multiplying the RF signals with the clock signals. In the fourth preferred embodiment, the mixer **1160** preferably modulates the transmission data to increase a low frequency of the transmission data by a frequency of the combined clock signals. Noise does not effect the transmission data as significantly on modulation relative to demodulation. However, reducing the frequency of the clock signals LO(**0**, . . . , N−1) does reduce or remove noise such as parasitic capacitance. In addition, the frequency limit of the CMOS technology of approximately 1 GHz can be overcome. Thus, the fourth preferred embodiment has the same advantages as the first through third preferred embodiments.

FIG. **12**A is a block diagram of an exemplary VCO-mixer structure in accordance with the preferred embodiments of the present invention. The VCO-mixer circuit is described in U.S. patent application Ser. No. 09/121,863, entitled "VOC-MIXER STRUCTURE" by Mr. Kyeongho Lee, the subject matter of which is hereby incorporated by reference. The structure includes a multi-phase voltage controlled oscillator VCO **1250** and a multi-phase mixer **1200**. The multi-phase mixer **1200** includes a differential amplifying circuit **1200**A and a combining circuit **1200**B.

When a reference clock signal having a reference frequency of $f_{REF}=f_0$ is used, the multi-phase VCO **1250** generates a plurality of N-phase clock signals LO(i=0 to N−1) having a frequency of $2*f_0/N$, where $N=N_D*2$ and N_D equals the number of delay cells in the multi-phase VCO **1250**. In other words, the VCO **1250** reduces the frequency f_0 to $2*f_0/N$. The frequency $2*f_0/N$ reduces the phase noise of the multi-phase VCO and increases the frequency range.

The plurality of N-phase intermediate clock signals LO(**0**), LO(**1**), . . . ,LO(N−1) having a frequency of $2*f_0/N$ is inputted into the combining circuit **1200**B of the multi-phase mixer **1200**, and the input signals, for example, RF signals RF+ and RF− are inputted into the differential amplifying circuit **1200**A. The differential amplifying circuit **1200**B differentially amplifies the radio frequency signals RF± and RF−. The combining circuit **1200**B is responsive to a bias voltage V_{Bias} and combines the N-phase intermediate clock signals LO(**0**)–LO(N−1) to generate the output clock signals LOT+ and LOT− having the original frequency f_0. The mixer **1200** then accomplishes a multiplication of the output clock signals LOT+ and LOT− and the RF signals RF+ and RF−.

FIG. **12**B illustrates an exemplary circuit diagram of the VCO-mixer structure **1250**, **1200**. The multi-phase VCO **1250** includes N_D number of delay cells $\mathbf{1250}_1$–$\mathbf{1250}_{ND}$ coupled in series. Based on such configuration, the multi-phase VCO generates a plurality of N-phase intermediate clock signals LO(**0**)–LO(N−1) having a frequency of $2*f_0/N$. A control circuit for the VCO **1250** that generates a frequency control signal includes a phase frequency detector **1254**, a charge pump **1256** and a loop filter **1258** that outputs the frequency control signal to each of the delay cells $\mathbf{1250}_1$–$\mathbf{1250}_{ND}$. The phase frequency detector **1254** receives

a reference clock signal f_{ref} and a VCO clock signal f_{VCO} from a reference clock divider circuit **1252** and a VCO clock divider circuit **1253**, respectively. The frequency 2 f_0/N of the clock signals LO(ϕ)–LO(N−1) is represented by M'/K (f_{ref})=2f_0/N. Thus, the frequency f_0 is based on the reference clock signal f_{ref} and the divider circuits **1252** and **1253**. In other words, f_{VCO} can be 2f_0/N setting M'/K' of the divider circuits **1252** and **1253**.

The differential amplifying circuit **1200**A of the multi-phase mixer **1200** includes two load resistors R**1**' and R**2**' coupled to two differential amplifiers **1200**A_1 and **1200**A_2, respectively. The differential amplifier **1200**A_1 includes two NMOS transistors **1210** and **1212**, and the differential amplifier **1200**A_2 includes two NMOS transistors **1214** and **1216**. The drains of the NMOS transistor **1210** and **1216** are coupled to the load resistors R**1**' and R**2**', respectively, and the gates of the NMOS transistors **1210** and **1216** are coupled for receiving the RF signal RF+. Further, the drains of the NMOS transistors **1212** and to **1214** are coupled to the load resistors R**2**' and R**1**', respectively, and the gates are coupled for receiving the RF signal RF−. The sources of NMOS transistors **1210** and **1212** and NMOS transistors **1214** and **1216** are coupled to each other and to the combining circuit **1200**B of the multi-phase mixer.

The differential amplifiers **1200**A_1 and **1200**A_2 differentially amplifies the RF signals RF+ and RF−, respectively, such that a more accurate output signals OUT− and OUT+ can be obtained. Further, the differential amplification removes noise that may have been added to the RF signals RF+ and RF−. In this preferred embodiment, two differential amplifiers **1200**A_1 and **1200**A_2 are included, however, the present invention may be also accomplished using only one of the differential amplifiers in alternative embodiments.

The combining circuit **1200**B includes bias NMOS transistors **1232** and **1234**, first combining unit **1200**B_1 and second combining unit **1200**B_2 coupled to the bias NMOS transistors **1232** and **1234**, respectively, and a current source I_{s1}, coupled to the first and second combining units **1200**B_1 and **1200**B_2. The first combining unit **1200**B_1 includes a plurality of transistor units **1220**$_0$, **1220**$_2$ . . . **1220**$_{N-2}$, and the second combining unit includes a second plurality of transistor units **1220**$_1$, **1220**$_3$ . . . **1220**$_{N-1}$.

Preferably, each of the plurality of transistor units includes a plurality of serially connected transistors, wherein the serially connected transistors are coupled in parallel with the serially connected transistors of the plurality of transistor units. Preferably, each transistor unit includes two (2) serially connected transistors. Hence, in the preferred embodiment, there are a total of N/2 number of transistor units in each combining unit **1200**A or **1200**B, such that the total number of NMOS transistors is 2*N.

The gate of the bias NMOS transistors **1232** and **1234** are coupled for receiving the bias voltage V_{Bias}, and the gates of the transistors in the first and second plurality of transistor units are coupled for receiving a corresponding N-phase intermediate clock signals LO(i) and /LO(i) having a frequency of 2*f_0/N, where /LO(i)= LO(N/2+i), i=0, 1 . . . , N/2−1. In this preferred embodiment, the bias NMOS transistors **1232** and **1234** are included for prevention of error, however, such transistors may be omitted in alternative embodiments. Further, the sequential ON-OFF operation of the 2*N number NMOS transistors of the combining circuit **1200**B is equivalent to a NAND logic circuit, which can be interchanged with other equivalent logic circuits and structure in alternative embodiments.

The generic FIG. **12**B structure allows integration of the multi-phase VCO **1250** and multi-phase mixer **1200** on a single chip, i.e., on a single semiconductor substrate using CMOS technology. Such structure and layout reduce noise including noise caused by parasitic capacitances. As described above, the differential amplification using the RF signals RF+ and RF− in the differential amplifying circuit **1200**A reduces noise.

The reduction of the reference frequency f_0 to N-phase intermediate clock signals LO(i) having a frequency of 2*f_0/N also reduces noise. When a plurality of transistors are formed on the same substrate, such as a semiconductor substrate for CMOS technology, a plurality of P-N junctions are formed in the substrate. The parasitic capacitances mostly exist at the P-N junctions. If the frequency of a signal applied to the gate of the transistor is very high, the higher frequency of f_0 causes much more noise compared to a reduced frequency of 2*f_0/N.

Further, the operation of the differential amplifier circuit **1200**A and the combining circuit **1200**B is dependent on the output clock signals LOT+ and LOT− having a frequency of f_0, which are provided by the first combining unit **1200**B_1 and second combining unit **1200**B_2, respectively, by combining the N-phase intermediate clock signals LO(i) having a frequency of 2*f_0/N. When the bias voltage V_{Bias} is applied, the NMOS transistors **1232** and **1234** are turned ON and OFF based on the output clock signals LOT+ and LOT−. Although the NMOS transistors **1210**, **1212**, **1214** and **1216** are turned ON by the RF signals RF+ and RF− applied to the gate electrodes, the amplification of the RF signals RF+ and RF− and the output clock signals LOT+ and LOT− for generating the output signals OUT+ and OUT− is performed when the bias NMOS transistors **1232** and **1234** are turned on by the clock signals LOT+ and LOT−.

FIG. **13** illustrates another exemplary embodiment of the multi-phase VCO and the multi-phase mixer when N_D=3 and N=6, and FIGS. **14**A–**14**H illustrate the operational timing diagrams of the circuit of FIG. **13**. The multi-phase VCO **1250** includes three delay cells **1250**$_1$–**1250**$_3$ to generate 6-phase intermediate clock signals LO(**0**)–LO(**5**). An exemplary circuit including five transistors for the delay cells **1250**$_1$–**1250**$_3$ (i.e., the delay cell **1250**$_1$) is also shown. For illustrative purposes only, if the input clock signal has a frequency of f_0=1.5 GHz, the 6-phase intermediate clock signals LO(**0**)–LO(**5**) will have a frequency of 0.5 GHz.

The 6-phase mixer **1280** includes a differential amplifying circuit **1280**A and a combining circuit **1280**B. The differential amplifying circuit **1280**A includes a first differential amplifier **1280**A_1 having NMOS transistors **1260** and **1262** and a second differential amplifier **1280**A_2 having NMOS transistors **1264** and **1266**, which are coupled to load resistors R**3** and R**4**, respectively. The combining circuit **1280**B includes a first combining unit **1280**B_1 and **1280**B_2, which are commonly coupled to a current source I_{S2}. The first and second combining units **1280**B_1 and **1280**B_2 are coupled to the first and second differential amplifiers **1280**$_1$ and **1280**A_2 through bias NMOS transistors **1282** and **1284**, respectively, which are biased by a bias voltage V_{Bias}. Cumulatively, the first and second combining units **1250**B_1 and **1250**B_2 includes six transistor units **1270**$_0$–**1270**$_5$ with a total of twelve transistors.

As shown in FIGS. **14**A–**14**F, the 6-phase VCO **1250** generates 6-phase intermediate clock signals LO(**1**)–LO(**5**) having the reduced frequency f_0/3. The 6-phase mixer **1250** receives the 6-phase intermediate clock signals LO(**1**)–LO(**5**) and the RF signals RF+ and RF−. Each intermediate clock signal LO(**1**)–LO(**5**) and /LO(**0**)–/LO(**2**), where /LO(**0**)=LO(**3**), /LO(**1**)=LO(**4**) and /LO(**2**)=LO(**5**), is applied to

a corresponding transistor of the first and second combining units **1280**B_1 and **1280**B_2. The first and second combining units **1280**B_1 and **1280**B_2 combine the 6-phase intermediate clock signals LO(**0**), LO(**1**), . . . LO(**4**), LO(**5**) having the frequency $f_0/3$ to generate the output clock signals LOT+ and LOT− having the frequency f_0.

As shown in FIGS. **14**A–**14**H, when LO(**0**) is high and LO(**1**) is low (LO(**4**)=high), the two output signals LOT+ and LOT− are low and high, respectively. When LO(**1**) is high and LO(**2**) is low (LO(**5**)=high), the output signals LOT+, LOT− are high and low, respectively. When LO(**2**) is high and LO(**3**) is low (LO(**0**)=high), the output signals LOT+ and LOT− are low and high, respectively. When LO (**3**) is high and LO(**4**) is low (LO(**1**)=high), the output signals LOT+ and LOT− are high and low, respectively. When LO(**4**) is high and LO(**5**) is low (LO(**2**)=high), the output signals LOT+ and LOT− of the mixer **503** are low and high, respectively. When LO(**5**) is high and LO(**0**) is low (LO(**3**)=high), the output signals LOT+ and LOT− are low and high, respectively.

Each pair of NMOS transistors in the combining circuit are turned on in order, thereby producing the output signals LOT+ and LOT−, as shown in FIGS. **14**G and **14**H.

As described above, the preferred embodiments of the RF communication system have various advantages. The preferred embodiment of the MPLF conversion RF communication system does not need any high quality filter and uses just one PLL. Thus, the MPLF conversion architecture can be easily integrated in one CMOS chip. Further, the frequency of channel selecting PLL is reduced from F_{RP} to $(2f_{RP})/N$, which results in the reduction of phase noise of a clock generating circuit such as a VCO and easy implementation of channel selection. In particular, the PLL frequency (LO) is different from (e.g. smaller than) the carrier frequency. As a result, the preferred embodiments of the MTLF RF communication system includes at least the advantages of both the related art direct conversion and double conversion communication systems while eliminating disadvantages of both architectures.

The foregoing embodiments are merely exemplary and are not to be construed as limiting the present invention. The present teaching can be readily applied to other types of apparatuses. The description of the present invention is intended to be illustrative, and not to limit the scope of the claims. Many alternatives, modifications, and variations will be apparent to those skilled in the art. In the claims, means-plus-function clauses are intended to cover the structures described herein as performing the recited function and not only structural equivalents but also equivalent structures.

What is claimed is:

1. A communication system, comprising:

a receiver unit that receives signals including selected signals having a carrier frequency;

a single PLL that generates more than two multi-phase clock signals having a frequency different from the carrier frequency, wherein the multi-phase clock signals are combined to generate a plurality of local oscillator signals having a second frequency higher than the frequency; and

a demodulation-mixer that mixes the received selected signals with the more than two multi-phase clock signals to output the selected signals having a frequency reduced by the carrier frequency, wherein each of the local oscillator signals demodulate one of an I carrier frequency signal and a Q carrier frequency signal.

2. The communication system of claim **1**, wherein the frequency is smaller than the carrier frequency, and wherein the RF communication system is formed on a single CMOS chip.

3. The communication system of claim **1**, wherein the PLL includes a clock generator.

4. The communication system of claim **3**, wherein the clock generator is a voltage controlled oscillator.

5. The communication system of claim **1**, wherein the receiver unit is a transceiver, further comprising:

a modulation mixer that mixes the multi-phase clock signals, which operate as the local oscillator signals, with transmission data to modulate the transmission data; and

a power amplifier that amplifies the modulated transmission data and transmits the data to the transceiver for transmission.

6. The communication system of claim **1**, further comprising:

a RF filter coupled to the receiver unit that filters the received selected signals;

a low noise amplifier coupled to the RF filter that amplifies the filtered selected signals with a gain; and

a low pass filter coupled to the demodulation mixer that filters the selected signals having the frequency reduced by the carrier frequency.

7. The communication system as claimed in claim **1**, further comprising:

an A/D converting unit that converts the selected signals from the demodulation-mixer into digital signals; and

a discrete-time signal processing unit that receives the digital signals.

8. The communication system of claim **1**, wherein the communication system is a RF receiver portion, wherein the selected signals are RF signals, wherein the multi-phase clock signals have a frequency of (2*carrier frequency/N) where N is a positive integer greater than two, and wherein the RF communication system is formed on a single CMOS chip.

9. The communication system of claim **1**, wherein the RF communication system is operated with the carrier frequency greater than 1 GHz.

10. A single chip RF communication system, comprising:

a transceiver for receiving and transmitting RF signals;

a single PLL for generating a plurality of 2N-phase clock signals having a substantially identical frequency $2*f_0/N$ smaller than a carrier frequency f_o, wherein N is a positive integer as a phase number;

a demodulation mixing unit for mixing the RF signals from the transceiver with the plurality of 2N-phase clock signals from the PLL to output the RU signals having a frequency reduced by the carrier frequency, wherein the demodulation mixer comprises a plurality of two input mixers, wherein the plurality of 2N-phase clock signals are combined to demodulate at least one of an I carrier frequency signal and a Q carrier frequency signal; and

an A/D converting unit for converting the RF signals from the demodulation mixing unit into digital signals.

11. The single chip RF communication system of claim **10**, wherein the demodulation mixing unit includes a first mixer array comprising one half of the two input mixers and a second mixer array comprising the other half of the two input mixers, and each mixer array inputs each corresponding N-phase clock signals of the 2N-phase clock signals together with the RF signals.

12. The single chip RF communication system of claim 10, wherein each mixer array comprises multi-stages of mixers, each stage includes at least one two-input mixer, and a first stage of the multi-stages inputs the RF signals and N-phase clock signals.

13. The single chip RF communication system of claim 12, wherein the multi-stages have a corresponding reducing number of mixers K1>K2>K3> . . . >Ki, where K1 is the first stage, K2 is a second stage, K3 is a third stage, and Ki is a with stage.

14. A method of operating a RF communication system, comprising:

receiving signals including selected signals having a carrier frequency;

generating more than two multi-phase clock signals each having a substantially identical frequency different from the carrier frequency, wherein the multi-phase clock signals are combined to generate a plurality of local oscillator signals having a second frequency higher than the frequency; and

mixing the received carrier frequency selected signals with the more than two multi-phase clock signals to output demodulated selected signals having a frequency reduced from the carrier frequency so that corresponding ones of the local oscillator signals combined from the more than two multi-phase clock signals demodulate one of a first carrier frequency signal and a second carrier frequency signal.

15. The method of claim 14, wherein the frequency is smaller than the carrier frequency, wherein the generating step uses a PLL that includes a voltage controlled oscillator, and wherein the first carrier frequency signal is an I carrier frequency signal and the second carrier frequency signal is a Q carrier frequency signal.

16. The method of claim 14, further comprising:

RF filtering the received selected signals;

amplifying the filtered selected signals with a gain; and

low pass filtering the demodulated selected signals having the frequency reduced to baseband;

A/D converting the low pass filtered frequency reduced selected signals into digital signals; and

discrete-time signal processing the digital signals.

17. The method of claim 14, further comprising:

modulation mixing the multi-phase clock signals combined as the local oscillator signals with transmission data to modulate the transmission data; and

power amplifying the modulated transmission data and transmitting the data to the transceiver for transmission.

18. The communication system of claim 1, wherein the demodulation mixer comprises a first mixer array and a second mixer array, each of the first and second mixer arrays including a plurality of multiple input mixers.

19. The communication system of claim 1, wherein the demodulation mixer comprises a first mixer array and a second mixer array, each of the first and second mixer arrays having a plurality of mixer stages, each of the mixer stages having at least one multiple input mixer.

20. The communication system of claim 19, wherein output signals from the at least one multiple input mixer of a first of the plurality of stages are input into at least one multiple input mixer of a second of the plurality of stages.

21. The communication system of claim 1, wherein the more than two multi-phase clock signals comprise a plurality of pairs of multi-phase clock signals, each of the plurality of pairs including an I carrier frequency signal and a Q carrier frequency signal.

22. The communication system of claim 1, wherein a reference signal is formed by combining the more than two multi-phase clock signals.

23. The single chip RF communication system of claim 10, wherein the demodulation mixing unit comprises a first mixer array and a second mixer array, each of the first and second mixer arrays including a plurality of multiple input mixers.

24. The single chip RF communication system of claim 10, wherein the demodulation mixing unit comprises a first mixer array and a second mixer array, each of the first and second mixer arrays having a plurality of mixer stages, each of the mixer stages having at least one multiple input mixer.

25. The single chip RF communication system of claim 24, wherein output signals from the at least one multiple input mixer of a first of the plurality of stages are input into at least one multiple input mixer of a second of the plurality of stages.

26. The single chip RF communication system of claim 10, wherein local oscillator signals are formed by combining the plurality of 2N-phase clock signals.

27. The single chip RF communication system of claim 10, wherein the plurality of 2N-phase clock signals are divided into a first plurality of clock signals combined to form an I carrier frequency, and a second plurality of clock signals combined to form a Q carrier frequency.

28. The method of claim 14, further comprising combining the more than two multi-phase clock signals to form a reference signal.

29. The method of claim 14, wherein the RF communication system is formed using CMOS technology and operates with the carrier frequency greater than 1 GHz.

30. The single chip RF communication system of claim 10, wherein the RF communication system is formed using CMOS technology and operates with the carrier frequency greater than 1 GHz.

31. A communication system, comprising:

receiving means for receiving signals including selected signals having a carrier frequency;

single PLL means for generating more than two multi-phase clock signals having a first frequency smaller than the carrier frequency; and

demodulation-mixer means for combining the multi-phase clock signals to form a plurality of local oscillator signals that each have a second frequency higher than the first frequency and for mixing with the received selected signals to output the selected signals having a frequency reduced from the carrier frequency, wherein the local oscillator signals demodulate corresponding ones of an I carrier frequency signal and a Q carrier frequency signal.

32. A single chip RF communication system, comprising:

transceiver means for receiving and transmitting RF signals;

single PLL means for generating a plurality of 2N-phase clock signals having a substantially identical frequency $2*f_0/N$ smaller than a carrier frequency f_o, wherein N is a positive integer as a phase number; and

demodulation mixing means for mixing the RF signals from the transceiver means with the plurality of 2N-phase clock signals from the PLL means to output the RF signals having a frequency reduced by the carrier frequency, wherein the demodulation mixer means comprises a first plurality of two input mixer means and a second plurality of two input mixer means, wherein the plurality of 2N-phase clock signals are combined to demodulate at least one of an I carrier frequency signal and a Q carrier frequency signal.

* * * * *