United States Patent [19]

Clark

[11] **Patent Number: 5,001,776**

[45] **Date of Patent: Mar. 19, 1991**

[54] **COMMUNICATION SYSTEM WITH ADAPTIVE TRANSCEIVERS TO CONTROL INTERMODULATION DISTORTION**

[75] Inventor: **Edward T. Clark**, Plantation, Fla.

[73] Assignee: **Motorola Inc.**, Schaumburg, Ill.

[21] Appl. No.: **263,146**

[22] Filed: **Oct. 27, 1988**

[51] **Int. Cl.**[5] **H04B 1/26**

[52] **U.S. Cl.** **455/226**; 455/236; 455/234; 455/343; 455/308

[58] **Field of Search** 455/295, 296, 308, 309, 455/310, 311, 255, 256, 264, 235, 236, 343, 226, 67, 68, 88

[56] **References Cited**

U.S. PATENT DOCUMENTS

4,352,208	9/1982	Schroeder	455/266
4,485,403	11/1984	Illetschko	455/296
4,691,382	9/1987	Nakajima	455/343
4,761,646	8/1988	Choquet et al.	370/13
4,907,293	3/1990	Veno	455/295

Primary Examiner—Reinhard J. Eisenzopf
Assistant Examiner—Edward Urban
Attorney, Agent, or Firm—Pablo Meles

[57] **ABSTRACT**

A transceiver determines the signal quality of a desired signal and the strength of all received signals. When the signal quality of the desired signal is low, and the signal strength of all received signals is high, the receiver is adapted to operate in a higher current mode, thereby minimizing intermodulation distortion. Conversely, when the quality of the desired signal is low and the strength of all received signals is also low, or when the quality of the desired signal is above a threshold, the receiver operates in a lower current mode to conserve power and maximize battery lifetime. Also, when the transceiver adapts to operate in the higher current mode, a command is sent instructing a transmitting party to increase the quality of their message which may enable the listening transceiver to adapt (return) to a lower current mode.

17 Claims, 2 Drawing Sheets

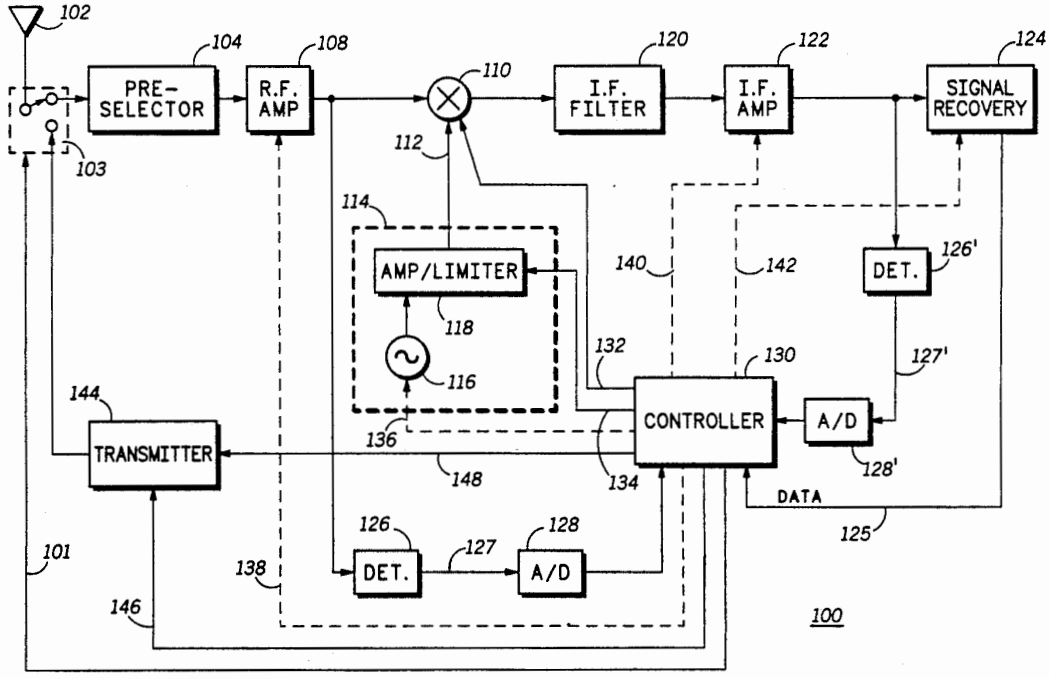

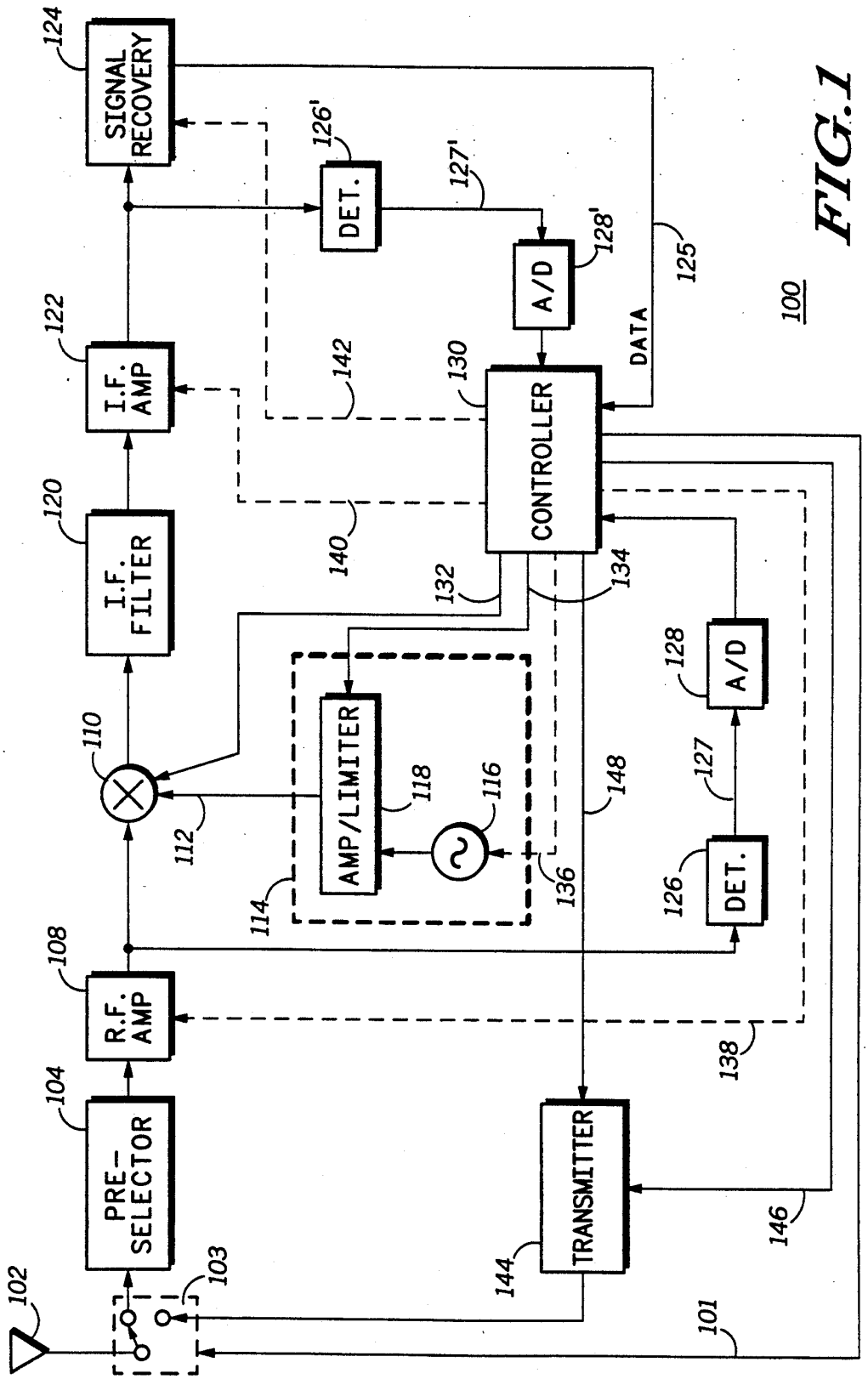
SIGNAL RECOVERY
124
DET.
126'
127'
A/D
128'
125
DATA
100
I.F. AMP
122
142
130
CONTROLLER
I.F. FILTER
120
140
132
134
A/D
128
AMP/LIMITER
118
116
110
112
148
127
DET.
126
114
136
R.F. AMP
108
138
PRE-SELECTOR
104
TRANSMITTER
146
144
103
102
101

FIG. 1

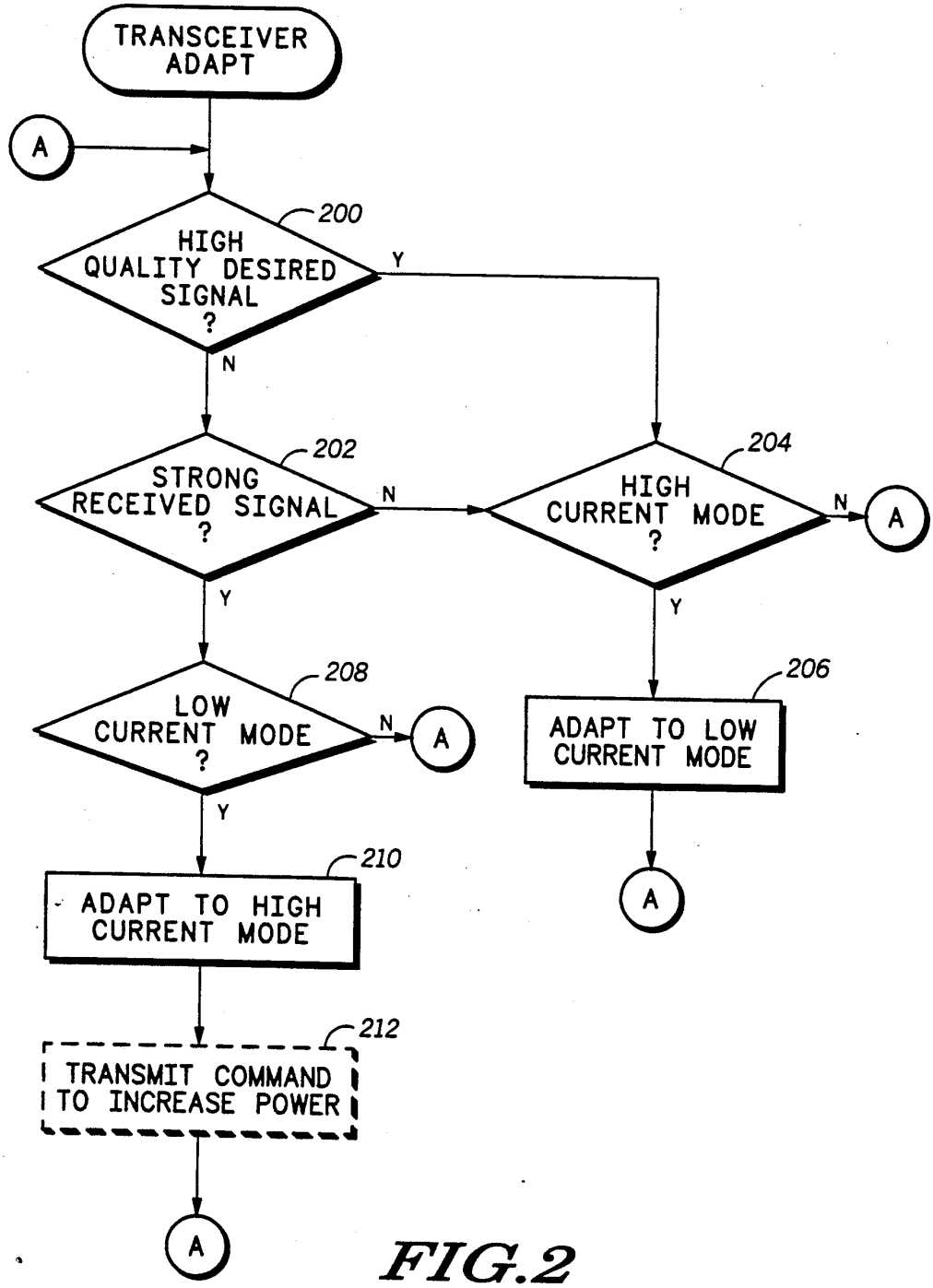
TRANSCEIVER ADAPT
A
200
HIGH QUALITY DESIRED SIGNAL ?
Y
N
202
STRONG RECEIVED SIGNAL ?
N
204
HIGH CURRENT MODE ?
N
A
Y
Y
208
LOW CURRENT MODE ?
N
A
206
ADAPT TO LOW CURRENT MODE
Y
210
ADAPT TO HIGH CURRENT MODE
A
212
TRANSMIT COMMAND TO INCREASE POWER
A

FIG.2

COMMUNICATION SYSTEM WITH ADAPTIVE TRANSCEIVERS TO CONTROL INTERMODULATION DISTORTION

TECHNICAL FIELD

This invention relates generally to radio frequency (RF) transceivers, and more specifically to RF tranceivers designed to conserve a battery power source, and is particularly directed toward adapting the power consumption of battery powered RF transceivers to control intermodulation distortion while maximizing the operational lifetime of the tranceiver's battery.

BACKGROUND ART

In an RF receiver, intermodulation distortion is caused by an interfering signal of sufficient signal strength mixing with a local oscillator (or injection) signal that results in an undesired signal appearing in the passboard of a receiver's intermediate frequency (IF) section. Generally, a desired signal is also mixed into the IF passboard, and the comtemporaneous presence of the undesired signal distorts the desired signal thereby reducing the intelligibilty of the desired signal.

It is known that the third order IM distortion of a balanced commutation mixer may be represent by:

$$IM \, \alpha \left(t_r x f_{lo} \frac{V_s}{V_c} \right)^2 \quad (1)$$

Where,
IM is the third order intermodulation distortion;
V_c is the peak-to-peak local oscillator voltage;
V_s is the peak received signal voltage;
t_r is the rise (and fall) time of V_c; and
f_{lo} is the frequency of the local oscillator.

As is known, the peak received signal voltage (V_s) may be viewed as a random parameter, and the frequency of the local oscillator (f_{lo}) is typically determined by the frequency of the desired signal Accordingly, for a given received signal level and frequency, analysis of equation (1) reveals that the IM of the mixer (and thus the receiver) may be minimized (theoretically to zero) by increasing the peak-to-peak local oscillator voltage (V_c), or by reducing the rise (and fall) time of the local oscillator waveform (t_r), such as by using a square wave. However, signal amplification and square wave generation require high current to enable active devices to operate at high speed. Thus, this practice may be detrimental to battery powered RF receivers since the radio's operational lifetime may be reduced to an impractically short interval. Conversely, merely adding more batteries (or cells) to an RF receiver may so increase the weight and physical size of the receiver as to make it undesirable to the comsuming public.

SUMMARY OF THE INVENTION

Accordingly, it is an object of the present invention to provide an Rf communication system transceiving devices capable of adapting their operation to minimize intermodulation distortion.

Briefly, according to the invention, a receiver (or the receiving section of a transceiver) determines the signal quality of a desired signal, and the combined strength of all received signals (i.e., both desired and interfering signals). When the signal quality of the desired signal is low, and the combined signal strength of all received signals is high (indicating a strong interfering signal), the receiver is adapted to operate in a higher current mode, which minimizes intermodulation distortion. Conversely, when the quality of the desired signal is low and the combined strength of all received signals is also low, or when the quality of the desired signal is above a threshold, the receiver operates in a lower current mode to conserve power and maximize battery lifetime.

In another embodiment of the present invention, a transceiver operates as described above to determines the quality of a desired signal and the combined strength of all received signals. When the transceiver adapts to operator in the higher current mode, a command is sent instructing the transmitting party to increase the quality of the transmitted message, such as, by increasing transmitter power, adding error correction information to the transmitted message, or decreasing the transmssion rate. By increasing the quality fo the transmitted message, the signal quality of the desired signal may increase to the point where the transceiver may adapt (return) to the lower current mode.

BRIEF DESCRIPTION OF THE DRAWINGS

FIG. **1** is a block diagram of a transceiver in accordance with the present invention;

FIG. **2** is a flow diagram illustrating the steps executed by the transceiver of FIG. **1** in accordance with the present invention.

DETAILED DESCRIPTION OF THE PREFERRED EMBODIMENT

Referring to FIG. **1**, a block diagram of a transceiver **100** in accordance with the present invention is shown. Operationally, signals received by an antenna **102** are directed via an antenna switch **103** to a pre-selector **104**, which appropriately band-limits the frequency spectrum of the transceiver **100**. The signals residing in the band-limited spectrum provided by the pre-selector **104** may be amplified in a radio frequency (RF) amplifier **108**, the output of which is routed to a mixer **110**. As a second input, the mixer **110** accepts an injection signal **112** provided by a local oscillator **114**. The local oscillator **114** comprises and oscillattor **116**, which may be a VXCO or other source of suitable stability. The oscillator **116** is coupled to an amplifier/limiter **118**, which controls the peak-to-peak voltage of the injection signal **112**. By controlling the amplifier/limiter **118**, the injection signal may be provided in the form of a square wave so that the rise (and fall) time of the injection signal **112** is minimized.

The output of the mixer **110** comprises an intermediate frequency (IF) signal, which is further filtered in an IF filter **120** the band-width of which determines the received signals that will be processed to recover a desired information signal (either data or voice). Typically, the filtered IF signal is amplified in an intermediate frequency amplfier **122**, prior to being routed to a signal recovery section **124**. The signal recovery section **124** may comprise a demodulator of conventional design for recovering voice messages, and may further comprise any suitable data detector for recovering data messages, which are routed (via data line **125**) to a controller **130**.

According to the invention, a "front end" signal detector **126**, is coupled to the output of the RF amplifier **108**, and operates to provide a DC output voltage signal

127 that varies in proportion to the signal strength of all received signals (i.e., both desired signals and interfering signals). The signal detector **126** is referred to herein as a "front end" detector since it operates before the IF section (i.e., the IF filter **120** and the IF amplifier **122**) of the transceiver **100**. Additionally, a "back end" signal detector **126'** is coupled to the output of the IF amplifier **122**, and operates to provide a DC output voltage signal **127'** that varies in proportion to the signal quality of a desired signal. According to the invention, the quality parameter of the desired signal monitored by the detector **126'** preferably comprises received signal strength for voice signals, and bit error rate (BER) for data signals, but may also comprise signal-to-noise ratios, intersymbol interference measurements, or other such parameters used to relate or connote signal quality. The signal detector **126'** is referred to herein as a "back end" detector since it operates after the IF section (i.e., the filter **120** and the IF amplifier **122**) of the transceiver **100**. Such signal detectors are well known in the art and any suitable implementation of a signal detector capable of providing a signal strength indicator (**127** or **127'**) may be used in conjunction with the present invention.

The signal strength indicators **127** and **127'** are digitized vai an analog-to-digit (A/D) convertors (**128** and **128'** respectively) prior to being routed to a controller **130**. The controller **130** compares the digital representation of the received signal strength (**127**) and the desired signal quality (**127'**) to at least one threshold to determine whether the received signal contains an interfering signal capable of promoting intermodulation distortion of the desired signal. So long as the quality of the desired signal is high, the transceiver **100** operates in a lower current mode so as to conserve power. Conversely, when the quality of the desired signal is low, the signal strength of the "front end" received signals is examined. A weak "front end" signal indicates the absence of any significant interfering signal, while a strong "frone end" signal strength indicates the presence of a strong interfering signal capable of promoting intermodulation distortion of the known low quality desired signal. According to the invention, the transceiver **100** operates to adapt to a higher current operating mode in the presence of a poor (or low) quality desired signal and a strong "front end" signal strength as indicated below in Table 1. Optionally, when both the "front end" signal strength and the "back end" signal quality are high, the high current mode may be more desirable than the low current mode for some applications.

TABLE 1

Desired Signal Quality	Received Signal Strength	Operating Mode
Low	Low	Low Current
Low	High	High Current
High	Low	Low Current
High	High	Low Current

To minimize intermodulation distortion, the controller **130** of the transceiver **100** operates to adapt at least the peak-to-peak voltage of the injection **112** by controlling (via a control line **134**) the amplifier/limiter **118**. Depending upon the command of the controller **130**, the amplifier/limiter **118** increases the peak-to-peak voltage of the injection signal **112** to a suitable level, and may generate a large amplitude square wave so as to further minimize IM distortion. Additionally, the controller **130** may vary (via a control line **132**) the current consumption of the mixer **110** to enable switching transistors and other circuits to operate at an increased speed or enhanced performance, which also reduces IM distortion.

According to the invention, the Rf transceiver **100** is preferably a battery powered device. Thus, it will be appreciated that the gain achieved by the present invention in reducing IM distortion is not without cost. As previously mentioned, the injection signal modifications, the mixer switching speed adaptions, and other performance enhancements made to minimize IM distortion require high current. Accordingly, prolonged operation in a high current mode may cause the battery of the transceiver **100** to be prematurely exhausted. Thus, the present invention operates to balance current drain and battery life against signal distortion and message intelligibility. This balance is achieved and maintained by the controller **130** as it compares the "back end" signal quality and the "front end" signal strength against thresholds selected to correspond to varying degrees of desired signal intelligibility. So long as the desired signal quality remains sufficiently high, the transceiver **100** may operate in a lower power mode to conserve power. However, as the quality of the desired signal falls, the injection signal **112** may be adjusted to counteract any distorting effects that a strong interfering signal may cause. Conversely, for interfering signals with lower signal strength, certain degradations in the desired signal's intelligibly may be permitted in favor of increased battery life.

Optionally, the controller **130** may adapt additional parameters when adapting between a lower current and a higher current mode. For example, the oscillator **116** may be shut down or its operation appreciably slowed (via the control line **136**). Also, the amplification factors (and thus the current drain) of the RF amplifier **108** and the IF amplifier **122** may be varied (via control lines **138** and **140** respectively) by the controller **130**. Finally, the controller **130** may shut down (or slow down) certain stages of the signal recovery section **124** (via a control line **142**), such as, digital signalling processors (DSP) or other circuits known to consume large amounts of current.

In another embodiment of the present invention, the transceiver **100** operates to coupler (**101**) a transmitter **144** to the antenna **102** and send a command to other tranceiver's when adapting to operate in the higher current mode. That is, the signal quality of the desired signal is typically associated with another transceiver that is also a party to a conversation in progress. When the received signal strength (both desired and interfering signals) is high, and desired signal quality is low, the listening transceiver adapts to a higher current mode as discussed above to minimize IM distortion. Additionally however, the listening transceiver may send a command code to the transmitting transceiver that instructs the transmitting transceiver to increase the quality of its signal. This may be accomplished by increasing the transmitter power (via control line **146**), adding error correction codes to the signal (via data line **148**), or slowing the transmission rate (via control line **146**). The purpose of this exchange is to cause the quality of the desired signal at the listening transceiver to increase to a point where the listening transceiver may adapt (return) to the lower current mode and conserve battery power.

Referring to FIG. **2**, a flow diagram illustrating the steps executed by the transceiver **100** is shown. The

routine begins in decision **200**, which determines whether the quality of the desired signal is sufficiently high. If the determination of decision **200** is that a low quality desired signal has been received, the routine proceeds to decision **202**, which determines whether the strength of all received signal (both desired and interfering) at least equal to (or exceeds) a threshold. A negative determination of either decision **200** or decision **202** routes control to decision **204**, which determines whether the transceiver **100** is currently operating in a higher current mode (i.e., adapting to minimize IM distortion). If not, the routine proceeds to reference letter A (decision **200**). However, if the determination of decision **204** is that the transceiver is currently operating in the high current mode, the routine proceeds to step **206**, which adapts the receiver from the higher current mode to a lower current mode thereby conserving battery power.

Assuming, however, that the determination of decision **202** is that the strength of the "front end" signal is above the threshold, and thus likely to increase intermodulation distortion (due to the low quality of the desired signal), the routine proceeds to decision **208**, which determines whether the transceiver **100** is currently oerating in the lower current mode. If so, the routine proceeds to step **210**, which adapts the receiver to a higher current mode, including, at least adapting the injection signal **112**. Optionally, amplification factors of the RF amplifier **108** and the IF amplifier **122** may be varied when adapting from the higher current mode to the lower current mode, and also within either the higher or lower current modes to provide a fine adjustment. Finally, one or more stages of the signal recover section **124** may be provided with more or less current drive to vary their performance thereby facilitating recovery of the desired information signal, while conserving battery power.

Optionally, the transceiver may transmit a command to another transceiver to increase the quality of its signal (step **212**). Following this, the routine returns to decision **200**, which again determines the quality of the desired signal. If the quality of the desired signal has sufficiently improved, the routine proceeds through decision **204** to step **206**, which adapts (returns) the transceiver to the lower power mode. In this way, each tranceiver operating within the communication system cooperates to minimize intermodulation distortion.

What is claimed is:

1. In a two-way radio frequency communication system having at least two transceiving devices, a method for receiving an information signal that may be corrupted by an interfering signal, comprising the steps of: in at least one transceiving device:

(a) receiving a signal to provide a received signal comprising at least a desired signal;

(ai) mixing the received signal with an injection signal to provide a mixed signal;

(b) determining whether said desired signal has a signal quality above a first threshold after the received signal has been mixed;

(c) determining whether said received signal has a signal strength above a second threshold before the received signal is mixed; and

(d) controlling intermodulation distortion by adjusting at least said injection signal when said signal quality of said desired signal is below said first threshold and said signal strength of said received signal is above said second threshold:

(e) transmitting a command code when said signal quality of said desired signal is below said first threshold and said strength of said received signal is above said second threshold:

(f) determining whether said desired signal has a signal quality above a first threshold:

(g) adjusting at least said injection signal when said signal quality of said desired signal is above said first threshold.

2. The method of claim **1**, wherein step (d) comprises increasing peak voltage of said injection signal when said signal quality of said desired signal is below said first threshold and said signal strength of said received signal is above said second threshold.

3. The method of claim **2**, wherein step (d) further comprises reducing rise time of said injection signal when said signal quality of said desired signal is below said first threshold and said signal strength of said received signal is above said second threshold.

4. The method of claim **1**, wherein step (d) comprises reducing rise time of said injection signal when said signal quality of said desired signal is below said first threshold and said signal strength of said received signal is above said second threshold.

5. The method of claim **1**, wherein step (d) comprise adjusting at least a portion of said receiver to operate in a higher current mode when said signal quality of said desired signal is below said first threshold and said signal strength of said received signal is above said second threshold.

6. The method of claim **5**, wherein step (d) further comprises adjusting said receiver to operate in a lower current mode when said signal quality of said desired signal is above said first threshold.

7. In a two-way frequency communication system having at least two transceiving devices, a method for receiving an information signal in the presence of an interfering signal, comprising the step of: in a first one transceiving device:

(a) a receiving a signal to provide a received signal comprising at least a desired signal;

(b) determining whether said received signal has a signal strength above a second threshold before mixing an injection signal with said received signal;

(c) determing whether said desired signal has a signal quality above a first threshold after mixing said injection signal with said signal; and,

(d) controlling intermodulation distortion by adjusting at least said injection signal when said signal quality of said desired signal is below said first threshold and said signal strength of said received signal is above said second threshold:

(e) transmitting a command code when said signal quality of said desired signal is below said first threshold and said signal strength of said received signal is above said second threshold:

(f) determining whether said desired signal has a signal above a first threshold:

(g) adjusting at least said injection signal when said signal quailty of said desired signal is above said first threshold: at a second transceiving device:

(a) transmitting said desired signal: p1 (b) receiving said command code:

(c) adjusting said second transceiving device and/or said desired signal in response to receiving said command code: and

(d) transmitting said desired signal.

8. The method of claim 7, wherein step d further comprises adjusting at least a portion of said receiver to operate in a higher current mode when said signal quality of said desired signal is below said first threshold and said signal strength of said received signal is above said second threshold.

9. The method of claim 7, wherein step (e) further comprises adjusting said receiver to operate in a lower current mode when said said signal quality of said desired signal is below said first threshold and said signal strength of said received signal is above said second threshold.

10. In a two-way radio frequency communication system having at least two battery powered transceiving devices having at least one converter capable of mixing a received signal with an injection signal to facilitate recovery of an information signal, a method for controlling intermodulation distortion in the battery powered transceiving devices comprising the steps of: in a first transceiving device:

(a) receiving a signal to provide a received signal comprising at least a desired signal;
(b) determining whether said desired signal has a signal quality above a first threshold after mixing said received signal with an injection signal;
(c) determining whether said received signal has a signal strength above a second threshold before mixing said received signal with said injection signal; and
(d) controlling intermodulation distortion by adjusting at least said injection signal when said signal quality of said desired signal is below said first threshold and said signal strength of said received signal is above said second threshold;
(e) transmitting a command code when said signal quality of said desired signal is below said first threshold and said signal strength of said received signal is above said second threshold;
(f) determining whether said desired signal has a signal quality above a first threshold;
(g) adjusting at least said injection signal when said signal quality of said desired signal is above said first threshold; at a second transceiving device:
(a) transmitting said desired signal;
(b) receiving said command code;
(c) adjusting said second transceiving device and/or said desired signal in reponse to recieving said command code; and,
(d) transmitting said desired signal.

11. A radio frequency transceiving device capable of receiving an information signal that may be corrupted by an interfering signal, comprising:

means for receiving a signal to provide a received signal comprising at least a desired signal;
means for filtering said received signal to substantially provide said desired signal;
means for determining whether said desired signal has a signal quality above a first threshold after the received signal is filtered to provide said desired signal;
means for determining whether said received signal has a signal strength above a second threshold before the received signal is filtered to provide said desired signal; and,
means for controlling intermodulation distortion by adjusting at least an injection signal when said signal quality of said desired signal is below said first threshold and said signal strength of said received signal is above said second threshold; and,
means for transmitting a command code when said signal quality of said desired signal is below said first threshold and said signal strength of said received signal is above said second threshold.

12. The radio frequency receiver of claim 11, wherein said means for controlling comprises means for increasing peak voltage of said injection signal quality of said desired signal is below said first threshold and said signal strength of said received signal is above said second threshold.

13. The radio frequency receiver of claim 12, wherein said means for controlling further comprises means for reducing rise time of said injection signal when said signal quality of said desired signal is below said first threshold and said signal strength of said received siganal is above said second threshold.

14. The radio frequency receiver of claim 11, wherein said means for controlling further comprises means for reducing rise time of said injection signal when said signal of said desired signal is below said first threshold and said signal strength of said received siganal is above said second threshold

15. The radio frequency receiver of claim 11, which includes means for adjusting at least a portion of said receiver to operate in a higher current mode when said signal quality of said desired signal is below said first threshold and said signal strength of said received signal is above said second threshold.

16. The radio frequency receiver of claim 15, which includes means for adjusting said receiver to operate in a lower current mode when said signal quality of said desired signal is above said first threshold,

17. A battery powered radio frequency transceiver for use in a two-way radio frequency communication system having at least two of said battery powered radio frequency transceivers each having at least one convertor for receiving an injection signal and a received signal to facilitate recovery of an information signal that may be corrupted by an interfering signal, and each of said at least two battery powered radio frequency transceivers being capable of controlling intermodulation distortion by adjusting between a low current mode and a high current mode which includes adjusting at least the peak voltage and rise time of said injection signal, said battery powered radio frequency transceiver comprising:

a battery source;
means for receiving a signal to provide a received signal comprising at least a desired signal;
means for mixing said received signal to substantially provide said desired signal;
means for determining whether said desired signal has a signal quality above a first threshold after mixing said received signal;
means for determining whether said received signal has a signal strength above a second threshold before mixing said received signal; and,
means for controlling intermodulation distortion by adjusting at least an injection signal when said signal quality of said desired signal is below said first threshold and said signal strength of said received signal is above said second threshold; and,
means for transmitting a command code when said signal quality of said desired signal is below said first threshold and said signal strength of said received signal is above said second threshold.

* * * * *