UNITED STATES PATENT AND TRADEMARK OFFICE

BEFORE THE PATENT TRIAL AND APPEAL BOARD

APPLE INC.,
Petitioner

v.

THETA IP, LLC.,
Patent Owner

Case No. IPR2024-00817
Patent No. 10,129,825

PETITIONER'S REPLY TO PATENT OWNER'S RESPONSE

TABLE OF CONTENTS

I. INTRODUCTION **1**

A. Procedural History **5**

II. ARGUMENT **6**

A. Behbahani's Variable Bandpass Filter Block is a "Component" and "Circuit" "in the Signal Path" that is Dynamically Adjusted **6**

B. PO's Narrow Interpretation Finds No Support in the Record **9**

1. PO identifies no support in the intrinsic record for excluding Behbahani's approach *9*

a. PO's reliance on inventor Tsividis's articles does not support its narrow construction *11*

2. Patent Owner's Box Drawing Finds No Support in the Intrinsic Record *16*

C. Inventor Tsividis's Publications Do Not Support PO's Position **17**

1. The 2003 Article Embraces Behbahani's Approach *18*

2. The 2003 Article Does Not Describe Dynamically Varying a Filter's Structure *22*

D. The Prior Art Renders Obvious a Signal Strength Indicator Circuit **23**

III. CONCLUSION **28**

I. INTRODUCTION

There are remarkably few remaining disputes in this proceeding. The parties appear to agree on the scope and content of the prior art. There is no apparent dispute as what Behbahani describes. Nor is there any apparent dispute that the three references—Behbahani, Leete, and Tan—describe the same research project and should be treated conjunctively for purposes of assessing obviousness. Indeed, with one minor exception related to signal strength measurements, the remaining dispute is identical to the sole substantive issue assessed at institution—whether the claims exclude Behbahani's approach of switching between two low-pass filter branches within its variable bandpass filter block. The claims do not exclude Behbahani's approach.

At institution, the Board correctly concluded that the record failed to support excluding Behbahani's approach. Paper 11, 41 ("[W]e preliminarily agree with Petitioner that the language of limitation 1(e) encompasses Behbahani's filter swap. Limitation 1(e) merely requires that "the power dissipation reduction in the receiver is achieved by *causing a bias current to vary in one or more of the plurality of circuits in the receiver signal path* of the wireless transceiver," without specifying any particular structure for effectuating this bias (or impedance) variance."). The POR contains no evidence or arguments that would support the Board reversing its preliminary findings. Indeed, even PO's expert disagrees with the POR's

interpretation of the intrinsic record and of inventor Tsividis's publications—the two categories of evidence proffered.

As it did pre-institution, the POR focuses on Fig. 6 in the intrinsic record to support its narrow claim interpretation. But PO's own expert critically disagrees with PO's interpretation. Namely, PO mischaracterizes Fig. 6, suggesting that the signal path on the left ***becomes***[1] the signal path on the right by simply changing the values of R and C. From this, PO insists Behbahani's approach of switching between ***different*** filter branches is excluded from the claimed invention. But PO's own expert disagrees:

> Q. Could Driver 612 be a different circuit than Driver 622 based on the description in the '330 Patent?[2]
>
> A. It could be different. It could be the same. The patent is silent on this issue.

Ex. 1043, 33:10-14. Dr. Larson is correct. There is nothing in the intrinsic record that narrowly demands adjusting individual resistors or capacitors ***to the exclusion*** of more comprehensive changes within a function block.

With no intrinsic support for its position, PO dedicates a substantial portion of the POR to inventor Tsividis's non-patent publications, including Ex. 1011—the

---

[1] All emphases added unless otherwise noted.

[2] The '330 and '825 Patents share a common specification. Accordingly, Dr. Larson's testimony regarding the specification of the '330 Patent applies equally to the '825 Patent.

2003 article (discussed in the Petition) that identifies Behbahani's approach as "one way to achieve" the patented dynamic impedance scaling. PO argues that Apple's interpretation of the article is "misleading and wrong." Paper 15, 61. But it is PO that has mischaracterized and/or misunderstood the article's teachings.

First, PO insists that the article "teaches away from" Behbahani's approach because the article notes that Behbahani's filter switch causes transients that can temporarily lead to data loss. *Id*., 60-61. But the '825 Patent expressly acknowledges that transients may briefly lead to data loss and recommends making dynamic adjustments during a preamble to ensure no valuable data is lost. Ex. 1001, 12:36-40. Indeed, related U.S. Patent 7,010,330 even ***claims*** this approach. IPR2024-00816, Ex.1001, Claim 2 (requiring a dynamic adjustment "while receiving the preamble portion"). It cannot be correct, as PO argues, that the Challenged Patent ***excludes*** systems that experience temporary transients where a claim deriving support from the same specification recites a technique for ***accommodating*** those very transients.

Second, PO argues the exclusive concept captured by the '825 Patent is referred to by the article as "'vary[ing] structure dynamically' in a single filter," citing the article's Fig. 12 as an example. *Id*., 60-62; *see also id*. at 8-11. But Dr. Larson rejected that Fig. 12 is the allegedly new approach of varying filter structure:

Q. Do you consider Figure 12 . . . to vary the structure of the circuit?

> A. Yeah, it's an interesting question. I would have to say . . . it doesn't vary the structure of the circuit, but it varies the elements within the structure of the circuit. . . . So, [] the structure [] of the circuit doesn't change.

Ex. 1043, 105:25-106:18. Even if it were proper, in a claim construction analysis, to credit inventor Tsividis's article for details left out of his patent (it is not), that PO misunderstands the article's key teachings is fatal to its attempted reliance.

In sum, neither PO's view of the intrinsic record nor its view of inventor Tsividis's related article support deviating from the conclusions reached at institution. The Board should make those conclusions final.

Finally, the POR introduces a new challenge that was not addressed at institution. Focusing on limitations in Claims 1, 3, 5, 7, and 8 that require a "circuit" for measuring signal strength in the signal path, PO argues that the Behbahani is deficient because it fails to describe the internal details of its signal strength measurement circuit. Among the many issues with PO's criticisms, the claims do not require any *specific* measurement circuit, and the specification describes no *specific* circuit for taking such measurements. Accordingly, PO's argument fails at least because it demands detail from the prior art that is not claimed and for which there is no intrinsic support.

A. Procedural History

PO's Preliminary Response ("POPR") did not dispute that Behbahani's variable filter block switches from a high-power to a low-power filter branch in response to signal strength measurements, and that this changes the impedance or bias current of the filter block. Paper 8, 33-50. The POPR argued only that Behbahani's filter swap fails to teach adjusting an impedance (or bias) "in the signal path" because (1) the individual filter branches are static (i.e., the impedance and current within each filter branch does not change) and (2) switching between the two scaled filters changes the signal path. *Id*. PO advanced three main arguments in alleged support. First, PO argued that the '825 Patent teaches making adjustments within a function block (e.g., functional block 820), which "may be a filter," insisting this excludes Behbahani's variable bandpass filter because Behbahani's variable bandpass filter includes multiple filter branches. *Id*., 38-39. Second, PO argued that "Figure 6 ***does not*** depict a circuit swap like Behbahani's, but rather a single RC circuit before and after its impedance is dynamically scaled." *Id*., 40. Finally, PO argued that bit errors resulting from temporary transients resulting from Behbahani's filter switch places its teachings outside the claims. *Id*., 36.

The Board correctly rejected PO's arguments at institution. Paper 11, 41-44. First, it noted that the patent "described Function Block 820 broadly" and found "no reason why Function Block 820 could not include multiple filters, such as the ones

used in Behbahani's filter swap." *Id*., 42. Second, the Board was "not persuaded by Patent Owner's reliance on Figure 6, which the '825 patent describes as merely '***an example*** of how a circuit's impedances may be scaled to reduce drive currents.'" *Id*. Finally, the Board was "not persuaded by Patent Owner's argument that Behbahani's filter swap 'causes discontinuity and bit errors,' because the claims include no limitations concerning discontinuity or bit errors[.]" *Id*., 43.

II. ARGUMENT

The POR reasserts the argument advanced in the POPR that all the Challenged Claims must be narrowly construed to exclude Behbahani's approach of switching between filter branches within its variable bandpass filter block. Paper 15, 48-66. Indeed, it relies on the same intrinsic evidence and extrinsic evidence preliminarily rejected by the Board. As set forth herein, PO has advanced no new evidence or arguments that favor reaching a different conclusion than the Board's preliminary findings.

A. Behbahani's Variable Bandpass Filter Block is a "Component" and "Circuit" "in the Signal Path" that is Dynamically Adjusted

The Petition identified Behbahani's variable filter block—a "variable bandwidth adaptive dynamic range band pass filter"—as the component or circuit in the signal path whose impedance and bias current is dynamically varied, as claimed. Paper 1, 30, 40-56; Paper 9, 1. As illustrated below, this variable filter block is dynamically adjusted by switching between two scaled low pass filter ("LPF")

paths—one high power ("HP LPF") and the other low power ("LP LPF")—both of which feed back into the same high pass filter ("HPF"):

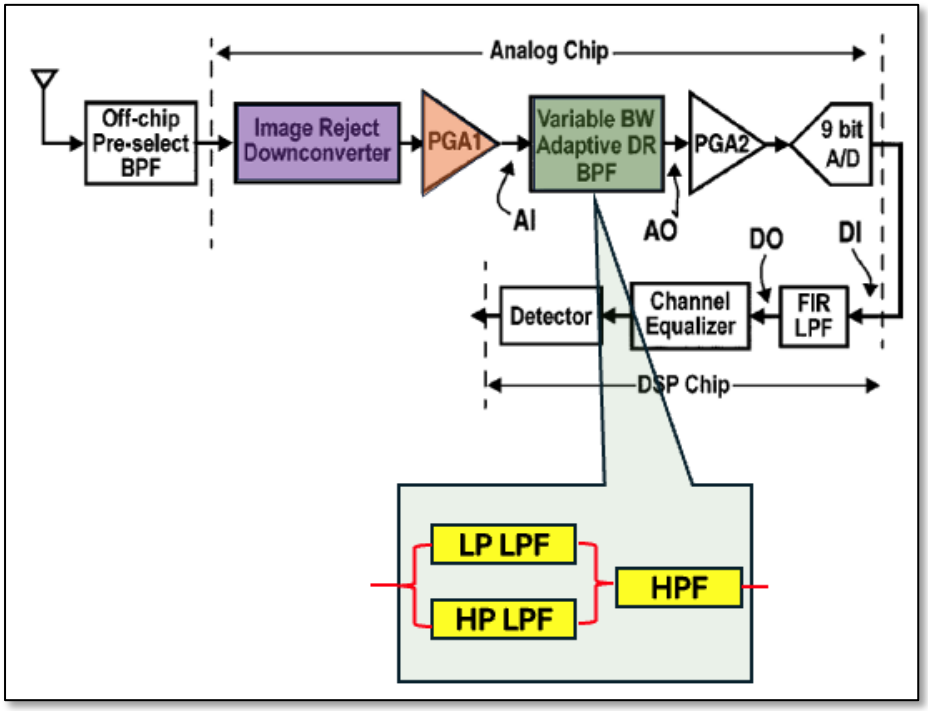

Ex. 1042, ¶¶4-6 (explaining that a signal enters the variable BPF block, traverses one of the two LPF branches, and then passes through the HPF). Neither this operation nor the fact that each of Behbahani's LPF branches have scaled impedances appears to be disputed on this record. Indeed, PO's expert annotated the following figure to show the scaled impedances between these two filter branches:

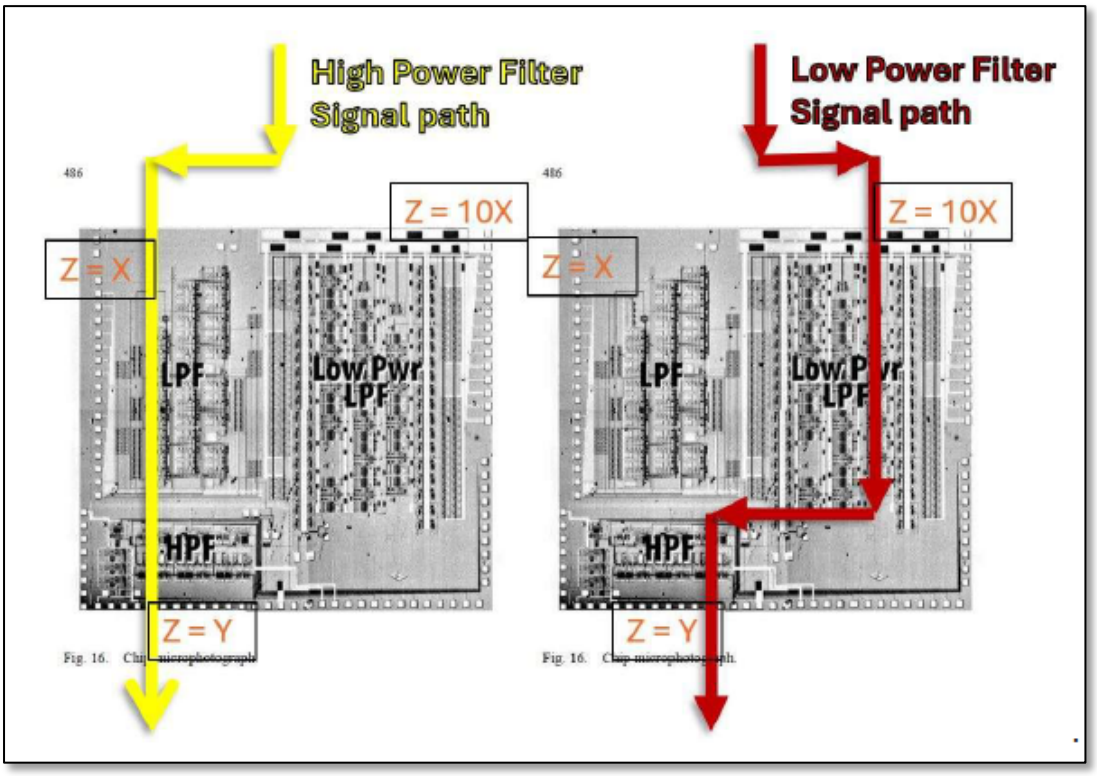

Ex. 2020, ¶82. Dr. Larson confirmed that, regardless of which LPF branch is switched in operation, the signal flows through the same HPF within the overall variable bandpass filter block. Ex. 1043, 64:6-10. He also confirmed that the bias current applied to each of these LPF branches is similarly scaled. *Id*., 67:12-68:9.

Given the apparent agreement as to Behbahani's operation, the Board need only resolve whether the record supports interpreting the claims to exclude this scaled filter approach. As set forth below, the record provides no support for such a narrow construction.

B. PO's Narrow Interpretation Finds No Support in the Record

1. PO identifies no support in the intrinsic record for excluding Behbahani's approach

PO attempts to impress upon the Board that the Challenged Claims (1) require adjusting the value of an individual circuit element (e.g., a resistor) and (2) exclude more comprehensive adjustments such as Behbahani's variable filter block switching between filter branches. Paper 15, 48-66. But the POR merely reprises arguments advanced in the POPR and correctly rejected at institution, providing the Board no reason to deviate from its preliminary determinations.

As it did pre-institution, PO focuses on Figure 6 of the '825 Patent as the sole specific example of dynamic impedance adjustment. Paper 15, 2–3, 25, 50-51. Namely, PO argues that Fig. 6 depicts varying a resistor within a filter circuit by simply increasing its impedance from R to 2R:

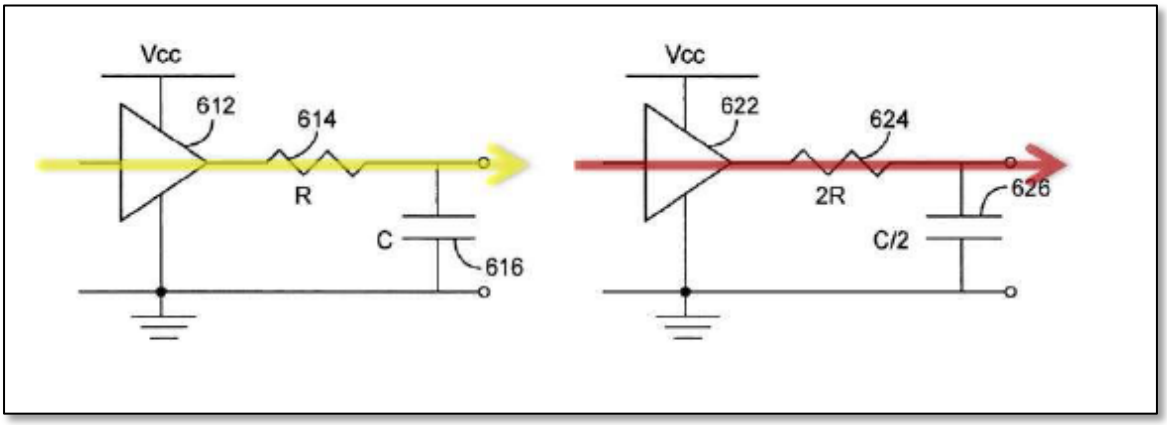

Paper 15, 50-51 (noting that Fig. 6 was "annotated to show signal path before the R to 2R change in yellow, and after in red"). PO mischaracterizes this figure,

suggesting that the signal path on the left ***becomes*** the signal path on the right by simply changing the values of R and C. *Id*., 2-3 (claiming "the signal path does not change, and no circuit needs to be swapped in or out of operation"). From this, PO insists Behbahani's approach of switching between ***different*** filter branches is excluded from the claimed invention. *Id*., 3, 51. Underlying PO's discussion of Fig. 6 is the presumption that driver 612 (on the left) and driver 622 (on the right) are the ***same*** circuit.[3] Indeed, if they were not the same driver, PO's interpretation of Fig. 6—that the left ***becomes*** the right by changing the values of R and C—crumbles. PO's own expert disagrees. Dr. Larson explained that the patent does not specify the relationship between the drivers:

> Q. Could Driver 612 be a different circuit than Driver 622 based on the description in the '330 Patent?
> A. It could be different. It could be the same. The patent is silent on this issue.

[3] As the Board correctly observed at institution, Figure 6 is insufficient to support PO's narrow interpretation. Paper 11, 42 ("[W]e are not persuaded by Patent Owner's reliance on Figure 6, which the '825 patent describes as merely '***an example*** of how a circuit's impedances may be scaled to reduce drive currents.'"). Accordingly, even if PO had correctly interpreted Fig. 6 (it has not), the intrinsic record does not support excluding Behbahani's approach.

Ex. 1043, 33:10-14. Having focused on this single circuit[4] as alleged support for its narrow construction, it is fatal that Dr. Larson rejects PO's interpretation. There is simply nothing in the intrinsic record that narrowly demands adjusting individual resistors or capacitors ***to the exclusion*** of more comprehensive changes within a function block. The Board correctly interpreted the intrinsic record at institution and should make those preliminary determinations final.

a. PO's reliance on inventor Tsividis's articles does not support its narrow construction

Seeking to supplement the anemic intrinsic record on the key dispute, PO repeatedly points to inventor Tsividis's articles related to the patented technology. But, as set forth below, the details in these articles hurt, rather than help, PO's cause.

First, PO analogizes Fig. 6 of the '825 Patent to Figure 12 of Inventor Tsividis's 2003 article. It argues Fig. 12 of Tsividis's 2003 article, like Fig. 6 of the '825 Patent, dynamically changes to R/2 by adding a second resistor in parallel with the original:

[4] PO's focus on Fig. 6 is not incidental. There are no other circuits described in the patent on which PO could have relied. PO's expert, Dr. Larson, admitted that the patent does not describe any specific functional blocks other than Fig. 6. Ex. 1043, 41:19-44:6.

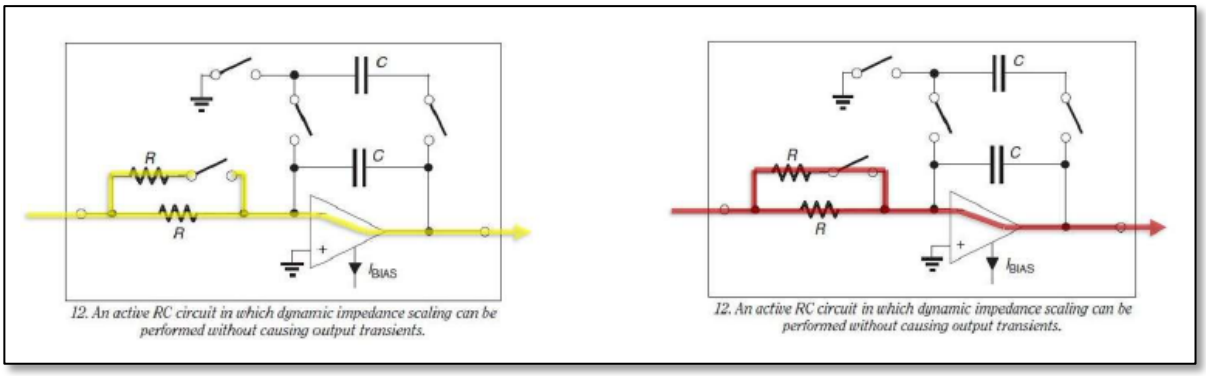

Paper 15, 50-51 ("annotat[ing] to illustrate signal path before the R to R/2 impedance change in yellow, and after in red"). PO's annotations reveal a flaw in its primary theory. As shown above, PO depicts both the upper and lower resistors in yellow—suggesting they are both part of "the signal path"—even when the upper resistor is switched out and conducting no current. Ex. 1043, 53:4-20 (confirming no signal flows through the upper resistor when the switch is open). But PO's primary argument in this proceeding is that the signal path ***excludes*** whichever Behabahni LPF branch is switched "off" and not conducting the signal.

Cross examination of PO's expert on this point reveals that the Tsividis patents do not in fact exclude Behbahani's approach. Instead, they capture switching between two paths. Posed with a hypothetical modification to Fig 12 in which (1) the resistors have different values and (2) ***either*** the upper or lower resistor is switched in at any given time, PO's expert confirmed that this would indeed be consistent with the '825 Patent. *Id.*, 57:7-58:24 (that routing signal either through

the upper or lower resistor is "consistent with the Tsidivis patents"). The following illustrations depict this hypothetical on which Dr. Larson opined:

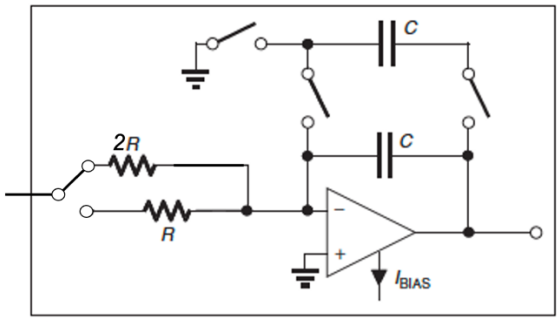

12. An active RC circuit in which dynamic impedance scaling can be performed without causing output transients.

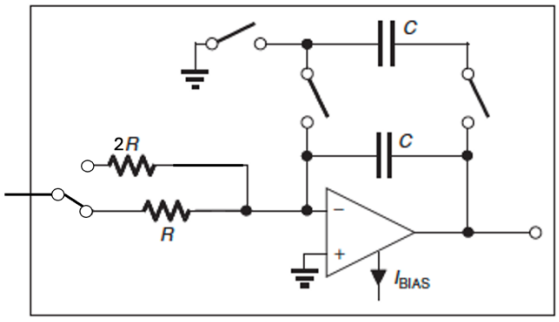

12. An active RC circuit in which dynamic impedance scaling can be performed without causing output transients.

Ex. 1042, ¶¶7-10 (explaining that the example on the left passes signal only through the upper resistor and the example on the right passes signal only through the lower resistor). A POSITA would understand that the Behbahani approach is no different. As illustrated below, signal entering the variable BPF block is routed either through the upper LPF branch or the lower LPF branch:

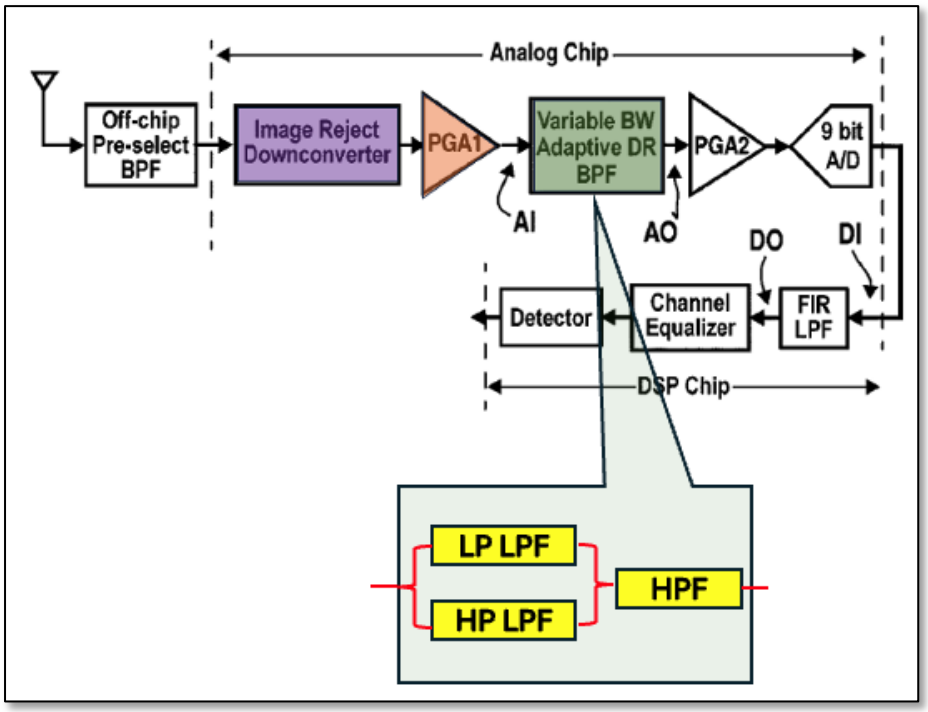

Ex. 1042, ¶¶7-11. According to PO's expert, that one branch is "off" or not passing signal at any given point in time does not mean Behbahani's approach is inconsistent with the '825 Patent, as PO alleges. Ex. 1043, 57:7-58:24.

Second, the POR compares Fig. 6 of the '825 Patent with Fig. 16 of Tsividis's 2018 article, claiming that both exemplify dynamic impedance scaling by modifying elements (i.e., resistors and capacitors) already "in the signal path." Paper 15, 24–25. PO claims that Fig. 16 in the 2018 article is "an example showing a combination of both impedance scaling (multiplying RC impedance by *n* via nR_x combined with C/*n*), and also bias current scaling (dividing I_{bias} by *n*)." *Id.*, 24.

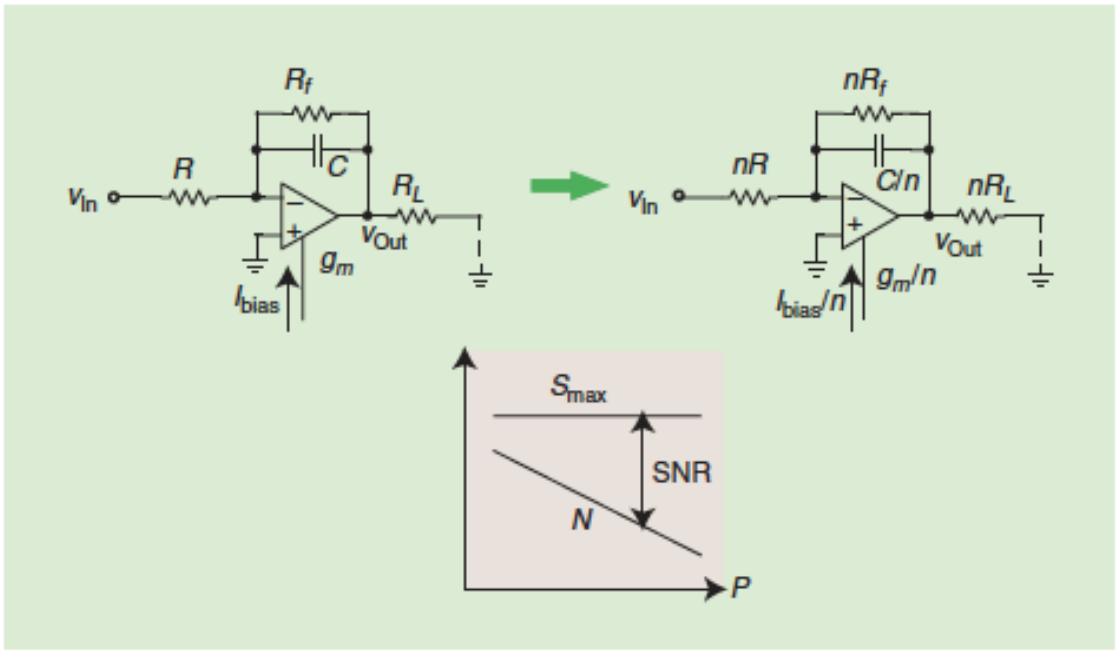

FIGURE 16: Bias-impedance scaling for an active *RC* circuit.

Ex. 2004, Fig. 16. As it did with the '825 Patent's Fig. 6, however, PO focuses on the individual resistor and capacitor value changes, ignoring the more substantial changes to the op-amp circuitry that is also taught by the 2018 article. As the article explains, bias and impedance scaling not only scales the resistances, capacitances, and bias currents, but also divides the transconductances by the same "n" scaling factor. Ex. 2004, 65-67 (indicated as g_m/n); *see also id*. at Fig. 12 (depicting multiple transconductors in parallel as a means of adjusting the circuit's transconductance). Accordingly, inventor Tsividis's 2018 article does not support PO's interpretation of the invention as capturing only minimal changes (e.g., to the values of resistors and capacitors). Instead, this article confirms that his alleged invention contemplates and captures much more substantial scaling, including to resistor and capacitor

values, but also by switching transconductors in and out of circuit to scale the entire filter block. As explained in the Petition and supporting expert declaration, this precise set of adjustments—scaling resistances, capacitances, transconductances, and bias currents—is what Behbahani describes. *See* Paper 1, 40-54; Ex. 1003, ¶¶110-139.

In sum, the intrinsic record provides no support for construing the claims narrowly to require adjusting individual resistors or capacitors ***to the exclusion*** of more comprehensive changes within a function block. And PO's attempt to supplement (or even supplant) the limited intrinsic record on this issue actually demonstrates the opposite—that inventor Tsividis intended to capture both rerouting signals within a function block and comprehensive changes to a function block.

2. Patent Owner's Box Drawing Finds No Support in the Intrinsic Record

With no support for its attempt to exclude Behbahani, PO seeks to shift the focus, advancing the unremarkable position that all independent claims uniformly require adjusting an "individual impedance," attempting to convey the idea—unsupported in the record—that the '825 Patent is limited to changing the value of resistors or capacitors, excluding more significant changes within a function block. Paper 15, 48-49. The Board has already found that Behbahani's filter swap varies an impedance and/or bias current "in one or more of the plurality of circuits in the receiver signal path[.]" Paper 11, 42. This preliminarily accepted Petitioner's core

theory: that Behbahani's entire variable filter block is the claimed "circuit", and that its impedance and bias current is dynamically adjusted by switching between two alternative filter paths within that "circuit." Instead of rebutting this theory, PO simply rejects this box drawing, supplanting it with PO's own narrower box drawing, and then insists that the record supports only PO's narrower box. Paper 15, 55-59, 63-66. As set forth above, there is simply no support for excluding Behbahani's larger filter block from being a "circuit" in the claims.

C. Inventor Tsividis's Publications Do Not Support PO's Position

With no intrinsic support for its position, PO dedicates a substantial portion of the POR to inventor Tsividis's non-patent publications, including Ex. 1011—the 2003 article (discussed in the Petition) that identifies Behbahani's approach as "one way to achieve" the patented dynamic impedance scaling. PO argues that Apple's interpretation of the article is "misleading and wrong." Paper 15, 60-61. PO insists that inventor Tsividis discouraged Behbahani's approach, rather than embracing it. PO also accuses Apple of ignoring the allegedly new and unexplored technique of dynamically varying the structure of an individual filter—an approach PO contends is the exclusive focus of the '825 Patent. In fact, PO has mischaracterized and/or misunderstood the article's teachings on both points.

1. The 2003 Article Embraces Behbahani's Approach

As discussed in the Petition, inventor Tsividis's 2003 article describes techniques he refers to as "dynamic impedance scaling" and "dynamic biasing." Ex. 1011, 8-9. The article explains how these techniques are used in conjunction to save power when signal conditions are better than worst-case: "when the desired signal happens to be strong and no strong blocker is present[,] . . . lowering capacitances and transconductances allows one to lower I_{BIAS} and thus the total power dissipation can be made small." *Id*., 8. The article continues, "[o]ne way to achieve the above scenario would be to use two filters, designed with different capacitance values, and place one or the other in service as required [34], turning the other filter off." *Id.* The parties agree that the reference to "[34]" is the Behbahani paper. PO's expert also concedes that the preceding description accurately describes Behbahani's operation. Ex. 1043, 75:18-77-10 (agreeing that Behbahani's filter branches are scaled in their transconductance values, capacitator values, and DC bias currents).

Yet PO insists that the article "teaches away from" Behbahani's approach because the article notes that Behbahani's filter switch causes transients that can temporarily lead to data loss. Paper 15, 60-61. This argument fails for several reasons. Most importantly, the '825 Patent expressly acknowledges that transients may briefly lead to data loss and recommends making dynamic adjustments during a preamble to ensure no valuable data is lost. Ex. 1001, 12:36-40; *see also* Ex. 1043,

108:16-109:25, 111:11-113-9 (PO's expert confirming that switching during a preamble is intended to accommodate transients). Indeed, related U.S. Patent 7,010,330 even ***claims*** this approach. IPR2024-00816, Ex.1001, Claim 2 (requiring a dynamic adjustment "while receiving the preamble portion"). It cannot be correct, as PO argues, that the Challenged Patent ***excludes*** systems that experience temporary transients where a claim deriving support from the same specification recites a technique for ***accommodating*** those very transients.

The record shows that this approach to accommodating transients was well established. Both Behbahani and the 2003 article propose dynamic adjustments made during a preamble specifically to avoid data loss due to those transients. Ex. 1004, 3 ("An abrupt switch from the low-power to the high-power filter causes the BER to increase momentarily. However, as data transmitted in frames is preceded by a preamble and training sequence, the desired filter is switched during the preamble and settles during that time, eliminating increase in bit error rate (BER) during the data sector."); Ex. 1011, 6 (identifying "undesirable transient [that may] occur[] at the system output[,]" but noting that, "[i]n some applications this is not a problem, as these changes may occur before the time comes to process the useful signal (for example, during the preamble slot in certain wireless protocols)").

As the Board correctly observed at institution, the'825 Patent claims contain no limitations excluding systems on the basis of transients. Paper 11, 43 (finding

PO's argument unpersuasive "because the claims include no limitations concerning discontinuity or bit errors, and Patent Owner does not sufficiently explain how Behbahani would teach away from the approach it proposes"). Because the record establishes that accommodating transients was well understood and certain claims even ***require*** preamble switching specifically to accommodate transients, PO cannot be correct that Behbahani's approach is excluded simply because its switching generates temporary transients.

Second, PO's expert explained that Fig. 12 in the 2003 article would also experience transients. Ex. 1043, 93:18-95:23 (explaining that the Fig. 12 process of equalizing an upper capacitor before switching into the circuit minimizes transients, but it does not eliminate them). PO has unequivocally stated that Fig. 12 is an approach captured by the '825 Patent, so transients alone cannot justify excluding a system.

Third, even if avoiding transients were somehow relevant to the Challenged Claims, inventor Tsividis has proposed multiple ways to avoid transients when implementing a two-filter path approach like Behbahani's. A first example is described in the 2003 article, proposing that both filter branches can be on during a brief "handoff" period to avoid transients associated with abrupt switching:

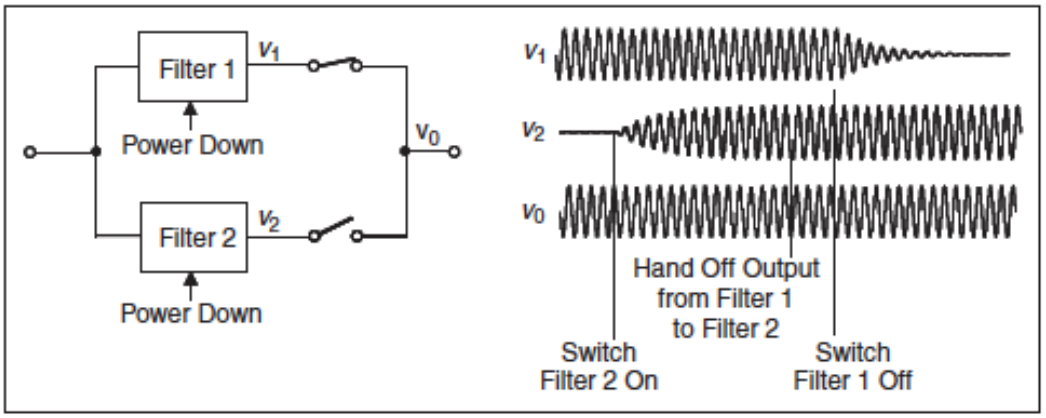

11. Method to switch between two signal processors with the same input-output behavior, without causing output transients.

EX1011, Fig. 11. As the 2003 article explains, the approach depicted in Figure 11 prevents the system from seeing output transients. "Before the output is to be switched, both filters are switched on; after the outputs of both filters become the same, the output can be handed off to the second filter, and then the first filter can be turned off." EX1011, 8. A second proposal is found in one of inventor Tsividis's other patents, U.S. Patent No. 7,436,251 (the "'251 Patent") (Ex. 1044). The '251 Patent acknowledges that switching between filter branches may generate transients due to capacitors in the newly selected branch needing to charge and proposes pre-charging the capacitors in the standby branch prior to switching. '251 Patent, 9:2-12; 9:54-64.

In sum, PO's assertion that Tsividis taught away from Behbahani's filter-swap architecture is contradicted by the record. Tsividis repeatedly embraced the

architecture and described multiple transient-minimizing solutions to ***accommodate*** Behbahani's filter-swap architecture.

2. *The 2003 Article Does Not Describe Dynamically Varying a Filter's Structure*

Throughout the POR, PO insists that Ex. 1011 distinguishes Behbahani in favor of a "'vary[ing] structure dynamically' in a single filter," citing the article's Fig. 12 as an example. Paper 15, 59-61; *see also id*. at 1, 8-10. PO even alleges that "Apple omits the forward-looking discussion at the end of the article wherein Professor Tsividis discusses a new, not yet fully investigated approach—that was disclosed, discussed, and claimed in the '825 Patent" of "us[ing] a single filter and vary its structure dynamically." *Id*., 11. PO is simply wrong that Fig. 12 is an example of dynamically varying a filter's structure. Its expert expressly rejected this interpretation:

> Q. Do you consider Figure 12 . . . to vary the structure of the circuit?
> A. Yeah it's an interesting question. I would have to say . . . it doesn't vary the structure of the circuit, but it varies the elements within the structure of the circuit. . . . So, [] the structure [] of the circuit doesn't change.

Ex. 1043, 105:25-106:18. Petitioner's expert, Dr. Abidi, confirms that Fig. 12 is merely a high-level example of a filter circuit that seeks to minimize transients by bringing both capacitors to an equal charge before switching the upper capacitor into

the filter signal path. Ex. 1042, ¶¶7-11. It does not represent a new and previously unexplored technique of dynamically varying the structure of a filter. *Id*.

D. The Prior Art Renders Obvious a Signal Strength Indicator Circuit

The claims recite a conventional "circuit" for determining signal strength. *See* Ex. 1001, Claim 1. According to the '825 Patent, a first signal strength is determined by comparing a cumulative signal strength of a first node to a cumulative signal strength at a second node. Paper 1, 31. The Petition established that "*Behbahani* teaches a nearly identical process for determining relative signal strengths," including "a first signal strength measured at node A_I." *Id*., 32-39.

PO argues that *Behbahani* is deficient because it does not dictate the specific circuitry used to measure signal strength at node A_I. POR, 67-70. This argument is flawed at least because it demands more specificity from the prior art than the '825 Patent itself provides. The claims recite a generic "circuit" and the specification does not describe any specific circuitry for measuring signal strength, depicting Signal Strength Indicator ("SSI") circuits as generic boxes in Figs. 4 and 14:

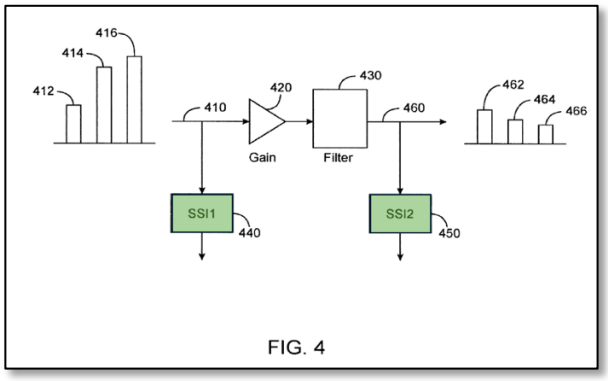

FIG. 4

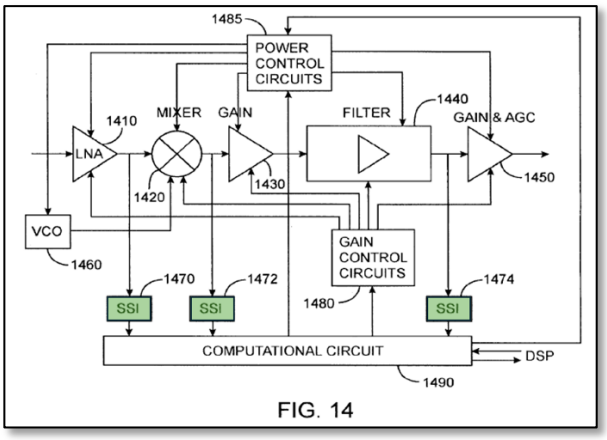

FIG. 14

Ex. 1001, Figs. 4, 14 (annotated). The specification provides no description of the *specific* circuit inside these generic boxes. Ex. 1042, ¶¶12-14 (explaining that the patent does not elaborate on their internal makeup).

Commensurate with the detail in the '825 Patent, Petitioner provided uncontested expert testimony from Dr. Abidi, a co-author of *Behbahani*, to support that *Behbahani's* signal strength measurement at nodes A_I and A_O suggests circuity for taking that measurement. Petition, 32-39 (citing EX1003, ¶¶ 96-105). Dr. Abidi confirmed on cross-examination that while *Behbahani* did not recite specific circuitry to measure signal strengths, "signal detection [was] well known at the time this circuit was developed" and was suggested by *Behbahani*. EX2021, 93:9-22; Ex. 1042, ¶¶12-16 (confirming that Behbahani suggests a signal strength measurement for A_I and A_O, but does not describe any specific circuit given how well-known signal strength measurement circuits were at the time).

Notably, PO's expert does not dispute that *Behbahani* suggests circuitry for measuring signal strength or that signal strength measurement circuits were in fact well known. Indeed, Dr. Larson does not weigh on this issue at all. Given the scant detail in the '825 Patent, Dr. Abidi's uncontested opinion alone is sufficient to meet the claims. *Bradium Techs., LLC v. Iancu*, 923 F.3d 1032, 1049 (Fed. Cir. 2019) (affirming Board's obviousness finding that a claim requiring a specific prioritization value was obvious over prior art that did not expressly disclose such a value, but fairly suggested it to a POSITA); *Uber Techs., Inc. v. X One, Inc.*, 957 F.3d 1334, 1339 (Fed. Cir. 2020) ("The specification is entirely silent on [claimed function,]...suggesting that a person of ordinary skill in the art was more than capable of selecting between the known methods of accomplishing this"); *Omega Liner Co., Inc, v. Buergofol GMBH*, IPR2023-01372, Paper 85, at *47 (Mar. 14, 2025) (where a component served a similar function as in the prior art, the patent's silence on specific implementation details indicated that overcoming them was an exercise of ordinary skill in the art).

Even if specific circuitry for measuring signals strength were required by the claims, the Petition establishes that *Behbahani* in view of *Tan* teaches express circuity for measuring signal strength. Paper 1, 36-39. PO's expert does not engage this theory either. Relying exclusively on attorney argument, PO insists that (1) *Tan* cannot be used to measure signal strength at A_I and A_O *because* its primary purpose

is to measure peak values[5] and (2) the *Behbahani* papers should be read to exclude the suggested measurement circuit because the authors' proof of concept prototype chip did not include any such circuitry. Paper 15, 68-70.

PO's first argument ignores that prior art must be read "for all that they disclose," accounting for the inferences and creative steps a POSITA would employ. *AliveCor, Inc. v. Apple Inc.*, 130 F.4th 1006, 1015 (Fed. Cir. 2025). This includes applying references in different contexts. *Id.*; *see also Perfect Web Techs., Inc. v. InfoUSA, Inc.*, 587 F.3d 1324 (Fed. Cir. 2009). Dr. Abidi provided well-reasoned analysis that *Tan's* peak measurement circuit would also measure signal strength at *Behbahani's* nodes, and PO's attorney argument cannot change that. Ex. 1003, ¶¶179-181; *In re Publicover*, 813 Fed. Appx. 527, 532 (Fed. Cir. 2020) ("attorney argument is not evidence" and rejecting "attorney argument as to the capabilities of

---

[5] PO cites to the Final Written Decision in 2023-00817, involving the '825 Patent. It claims that the Board there affirmed the validity of the claims because the alleged detector circuit in the prior art "could not perform both functions" of determining interferer and desired signal strengths. Paper 15, 67 (citing Ex. 2022, 35, 37). In fact, the Board in that proceeding found that the prior art's detector circuit provides *either* the signal strength of the desired channel *or* the neighboring channel from a wireless signal having a desired signal and an interferer signal, but not both at once. Ex. 2022, 37. There is no similar issue here. PO does not dispute, nor could it, that Behbahani takes measurements at A_I and A_O that contain both the desired signal and interferer signals.

a skilled artisan"). In response to the POR challenge, Dr. Abidi explains in his supplemental declaration how Tan's circuit provides cumulative signal strength measurements at A_I and A_O and further explains that a POSITA would have readily appreciated this given well-established nature of signal measurement circuits. Ex. 1042, ¶¶15-16.

PO's attorney argument surrounding *Behbahani's* test chip should also be rejected. First, Petitioner's obviousness theory does not rely on this prototype, nor can it. 35 U.S.C. § 311(b). Second, nothing in *Behbahani* suggests its system is limited to the specific details of any test chip. *DJI Europe B.V., v. Daedalus Blue LLC*, IPR2020-01475, Paper 31, at *27 (Feb. 3, 2022) (finding prototype as merely an example operation of the prior art disclosure and claim limitation still suggested by prior art patented system even if prototype did not include claimed component). Third, Dr. Abidi's explanation of why no measurement circuitry was built in the test chip supports, rather than detracts, from an obviousness finding. Indeed, Dr. Abidi testified that, because signal strength measurement circuits were ***so well understood***, they did not include such circuits in the prototype to "contain the amount of labor involved" in the project. Ex. 2021, 89:4-94:14. Regardless of the prototype design, the *Behbahani* papers measure signal strengths at various points along a signal path and teach or suggest the circuitry to effectuate those signal strength measurements, rendering the claims obvious.

III. CONCLUSION

Petitioner respectfully requests the Board find all Challenged Claims unpatentable.

Respectfully submitted,

BY: *__/s/ Paul R. Hart_____*
Paul R. Hart, Reg. No. 59,646
Adam P. Seitz, Reg. No. 52,206

COUNSEL FOR PETITIONER

APPENDIX OF EXHIBITS

Exhibit 1001	U.S. Patent Number 10,129,825 (the "'825 Patent")
Exhibit 1002	File History for U.S. Patent 10,129,825 (the "*'825 File History*")
Exhibit 1003	Asad Abidi Declaration ("*Dec.*")
Exhibit 1004	Farbod Behbahani et al., *Adaptive Analog IF Signal Processor for a Wide-Band CMOS Wireless Receiver*, 36 IEEE Journal of Solid-State Circuits 1205, (Aug. 2001) ("*Behbahani*")
Exhibit 1005	Farbod Behbahani et al., *A 2.4-GHz Low-IF Receiver for Wideband WLAN in 0.6μm CMOS – Architecture and Front-End*, 35 IEEE Journal of Solid-State Circuits 1908, (Dec. 2000) ("*Leete*")
Exhibit 1006	Farbod Behbahani et al., *A Broad-Band Tunable CMOS Channel-Select Filter for a Low-IF Wireless Receiver*, 35 IEEE Journal of Solid-State Circuits 476, (April 2000) ("*Tan*")
Exhibit 1007	Theta IP, LLC's Response Claim Construction Br., Dec. 08, 2023 *(Theta Markman Br.)*
Exhibit 1008	Joint Claim Construction Statement, Jan. 18, 2024 *(Joint Markman Statement)*
Exhibit 1009	Theta IP, LLC's Sur-Reply Claim Construction Br., Jan. 16, 2024 *(Theta Markman Br. Sur-Reply)*
Exhibit 1010	*June A. Munford Declaration ("Munford Dec.")*
Exhibit 1011	Y. Tsividis et al*., Internally Varying Analog Circuit Minimize Power Dissipation,* IEEE Circuits & Devices Magazine, Jan. 2003
Exhibit 1012	Mihai Banu & Yannis Tsividis, *Fully Integrated Active RC Filters in Technology*, 18 IEEE Journal of Solid-State Circuits 644, (Dec. 1983) ("Fully Integrated")
Exhibit 1013	Farbod Behbahani et. al, *An Adaptive 2.4GHz Low-IF Receiver in 0.6μm CMOS for Wideband Wireless LAN*, IEEE International Solid-State Circuits Conference, 2000 ("*Kishigami*").
Exhibit 1014	U.S. Patent No. 6,335,952 to Lee et al. ("*Lee*")
Exhibit 1015	Reinhold Ludwig, et. al, *RF Circuit Design,* 2000, *("Ludwig")*
Exhibit 1016	"AN-844 Integrated LNA and Mixer Basics" by Texas Instruments (April 1993) ("*Texas*")
Exhibit 1017	*Intentionally left blank*
Exhibit 1018	*Intentionally left blank*
Exhibit 1019	Rex Miller & Mark R. Miller, *Barron's Electronics The Easy Way* (4th ed.) (2002) ("*Barron")*
Exhibit 1020	*Intentionally left blank*

Exhibit 1021	Thomas Byunghak Cho & Paul R. Gray, *A 10 b, 20 Msample/s, 35 mW Pipeline A/D Converter,* IEEE Journal Of Solid-State Circuits Conference 166 (Mar. 1995*) ("Cho")*
Exhibit 1022	*Intentionally left blank*
Exhibit 1023	Roubik Gregorian & Gabor C. Temes, *Analog MOS Integrated Circuits for Signal Processing* (Robert A. Johnson & George Szentirmai eds., 1986) ("*Gregorian*")
Exhibit 1024	John Pritiskutch & Brett Hanson, *UNDERSTANDING LDMOS DEVICE FUNDAMENTALS,* AN1226 App. Note (July 2000) *("STMicroelectronics")*
Exhibit 1025	*Intentionally left blank*
Exhibit 1026	John G. Proakis & Masoud Salehi, *Communications Systems Engineering,* (1994) ("*Proakis*")
Exhibit 1027	S. Khorram et. al, *A CMOS Limiting Amplifier and Signal-Strength Indicator*, 1995 Symposium on VSLI Circuits Digest of Technical Papers, (1995) ("*Khorram*")
Exhibit 1028	The Evolution of Wi-Fi Technology, IEEE Standards Association, (May 16, 2023) ("IEEE")
Exhibit 1029	Kevin Werbach, *Open Spectrum The New Wireless Paradigm*, New America Foundation, Spectrum Series Working Paper #6 (Oct. 2002) ("*Werbach*")
Exhibit 1030	Robert G. Fichman et. al, *Information-Rich Commerce At A Crossroads: Business and Technology Adoption Requirements*, (July 2002) ("*Fichman*")
Exhibit 1031	U.S. Patent No. 6,480,700 to Groe et al. ("*Groe*")
Exhibit 1032	Gary J. Saulnier et. al, *A VLSI Demodulator for Digital RF Network Applications: Theory and Results*, 8 IEEE Journal On Selected Areas In Communications 1500 (Oct. 1990) ("*Saulnier*")
Exhibit 1033	*Intentionally left blank*
Exhibit 1034	*Intentionally left blank*
Exhibit 1035	Arthur D. Spaulding et al, *Optimum Reception in an Impulsive Interference Environment-Part I: Coherent Detection,* COM-25 IEEE Transactions on Communications 910 (Sept. 1997) *(Spaulding")*
Exhibit 1036	*Intentionally left blank*
Exhibit 1037	*Intentionally left blank*
Exhibit 1038	Marvin E. Frerking, *Digital Signal Processing In Communication Systems*, (1994) ("Frerking")
Exhibit 1039	*Intentionally left blank*
Exhibit 1040	*Intentionally left blank*

Exhibit 1041	Jacques C. Rudell et. al, *Recent Developments in High Integration Multi-Standard CMOS Transceivers for Personal Communication Systems*, 1998 ("*Rudell*")
Exhibit 1042	Supplemental Declaration of Dr. Asad Abidi
Exhibit 1043	Transcript of Deposition of Dr. Lawrence E. Larson
Exhibit 1044	U.S. Patent No. 7,436,251 (the "'251 Patent")

CERTIFICATION OF COMPLIANCE WITH 37 C.F.R. 42.24

Pursuant to 37 C.F.R. § 42.24(c)(1), the undersigned certifies that the foregoing Petitioner's Reply to Patent Owner's Response contains 5,320 words, exclusive of the table of contents, certificate of service, certificate of word count, and appendix of exhibits.

BY: *_/s/ Paul R. Hart_*
Paul R. Hart, Reg. No. 59,646

COUNSEL FOR PETITIONER

CERTIFICATE OF SERVICE ON PATENT OWNER UNDER 37 C.F.R. § 42.6

Pursuant to 37 C.F.R. §§ 42.6(e) and 42.105(b), the undersigned certifies that on June 20, 2025, a complete and entire copy of this *Reply In Support Of Petition For Inter Partes Review Of U.S. Patent No. 10,129,825* was served on Patent Owner via email.

Aaron R. Hand (ahand@bdiplaw.com)
Corey Johanningmeier (cjohanningmeier@bdiplaw.com)
BDIP_ThetaIP-Apple@bdiplaw.com

Respectfully submitted,

By: *__/s/ Paul R. Hart_____*
Paul R. Hart, Reg. No. 59,646

COUNSEL FOR PETITIONER