UNITED STATES PATENT AND TRADEMARK OFFICE

BEFORE THE PATENT TRIAL AND APPEAL BOARD

APPLE INC.,
Petitioner,

v.

THETA IP, LLC,
Patent Owner.

Case IPR2024-00816, -00817, -00818, -00819, & -00820
U.S. Patent Nos. 7,010,330, 10,129,825, 10,524,202, 11,564,164, & 11,638,210

DECLARATION OF LAWRENCE E. LARSON IN SUPPORT OF PATENT OWNER'S PRELIMINARY RESPONSES

I, Lawrence E. Larson, declare as follows:

INTRODUCTION

1. My name is Larry Larson. I have been retained by Theta IP, LLC ("Theta") to provide information and assistance regarding U.S. Patent No. 7,010,330 ("the '330 Patent"), U.S. Patent No. 10,129,825 ("the '825 Patent"), U.S. Patent No. 10,524,202 ("the '202 Patent"), U.S. Patent No. 11,564,164 ("the '164 Patent"), and U.S. Patent No. 11,638,210 ("the '210 Patent") (collectively, the "Tsividis Patents"). Specifically, I have been asked to consider the Petitions for *Inter Partes* Review numbered IPR2024-00816, IPR2024-00817, IPR2024-00818, IPR2024-00819, and IPR2024-00820 ("Petitions") regarding the Tsividis Patents, and specifically the Declarations of Professor Asad Abidi (EX1003) that accompany the Petitions.

2. For the purposes of this declaration, I have been asked to provide information and opinions about the state of the art and knowledge of a person of ordinary skill in the art, what such a person would understand from the Tsividis Patents, what such a person would find disclosed in or obvious from the prior art references relied on in the Petitions, and related issues in response to the opinions expressed by Professor Abidi.

3. I have personal knowledge of the facts and opinions set forth in this declaration, and, if called upon to do so, I would testify competently thereto.

4. I am currently Professor of Engineering at the School of Engineering, Brown University. I have also held the positions of Interim Provost of Brown University, as well as Sorensen Family Dean and Founding Dean of the School of Engineering. I hold a Ph.D. in Electrical Engineering, as well as a M.B.A. degree, from the University of California, Los Angeles, and Master of Engineering and Bachelor of Science degrees in Electrical Engineering from Cornell University. I have over 40 years of experience in the design of high-performance circuits for RF communications and other applications, both in industry and academia. I have published hundreds of papers in refereed journals and conference proceedings, and am a named inventor on at least 43 issued patents. My experience will be described further below under Qualifications and Background, and in my CV (EX2006).

5. I am being compensated for my work in connection with this matter at my standard hourly consulting rate. My compensation for my work in this matter is not dependent in any way on my conclusions and opinions, the contents of this declaration, the substance of any further opinions or testimony that I may provide, or the outcome of this matter or any matter involving the Tsividis Patents.

6. The materials I have reviewed in forming the opinions in this declaration include the following:

a. The ’330 Patent, ’825 Patent, ’202 Patent, ’164 Patent, and ’210 Patent (EX1001 to each Petition) and their prosecution histories (EX1002 to each Petition).

b. The *Behbahani* (EX1004), *Leete* (EX1005), and *Tan* (EX1006) references cited in the Petitions.

c. Professor Tsividis’ 2003 article (EX1011) cited in the Petitions.

d. The Declarations of Professor Asad Abidi (EX1003 to each Petition) and the materials discussed therein.

e. The Petitions and their remaining exhibits.

7. In addition, I have considered the relevant legal standards, as they have been explained to me by counsel and as I understand them. I have also considered the knowledge and understanding of a person of ordinary skill at the time of the filing of the ’330 Patent and as of the filing of its provisional patent applications, of which I am familiar.

8. I have previously submitted a report concerning some of the Tsividis Patents, in the concluded litigation *Theta IP, LLC v. Samsung Electronics Co. Ltd.*, No. W-20-CV-00160-ADA (W.D. Tex.). I have also submitted declarations and deposition testimony concerning the ’330, ’825, and ’202 Patents in three IPR proceedings filed by Lenovo (United States) Inc. and Motorola Mobility LLC, IPR2023-00694, IPR2023-00697, IPR2023-00698.

QUALIFICATIONS AND BACKGROUND

9. My education and professional background is in Electrical Engineering, with a particular focus on high-speed integrated circuit design. I hold a Ph.D. (1986) in Electrical Engineering from the University of California, Los Angeles, as well as a M.B.A. degree (1996) from that university, and Master of Engineering (1980) and Bachelor of Science (1979) degrees in Electrical Engineering from Cornell University.

10. I am currently a Professor of Engineering at the School of Engineering at Brown University. I recently completed an appointment as Interim Provost for Brown University. I have also been the Sorensen Family Dean (Inaugural Chair Holder) and Founding Dean of the School of Engineering there. I held that position beginning in 2011, during which time I oversaw a large expansion in the number of tenure-track engineering faculty, substantial increases in external research funding, the creation of new graduate programs, and the construction of a state-of-the-art research and teaching facility.

11. Over the course of my career, I have held a variety of positions in academia and industry. These include but are not limited to the following:

12. From 1980 to 1988, I was a Member of Technical Staff at Hughes Aircraft and Hughes Research Laboratories, where I was responsible for the development of CMOS and III-V analog and digital integrated circuits, modeling

and characterization of MESFETs and HEMTs and the development of improved III-V process techniques. During my tenure, among other things, I helped developed the first high-performance GaAs switched-capacitor circuits with clock rates in excess of 100 MHz, demonstrated the first use of low-temperature buffer GaAs MESFET technology with digital integrated circuits, setting a record for digital divider performance (22 GHz), and developed GaAs MESFET operational amplifier with record GBW (10 GHz).

13. From 1988 to 1992, I was an Adjunct Associate Professor at UCLA, where I was responsible for senior level digital and analog integrated circuit design courses and a graduate analog MOS integrated circuit design course.

14. From 1992 to 1994, I was an Assistant Manager for the DARPA / Hughes MIMIC Program, where I was responsible for Program Management of the Advanced Technology Portion of DARPA/Hughes MIMIC Program, with a budget of approximately $8M/yr. In that capacity, I was responsible for the technical and program direction of GaAs HBT and PHEMT efforts. I also directed insertion of advanced GaAs-based technology into next generation communication and radar systems.

15. From 1988 to 1994, I was also a Manager in the HEMT Technology Department, Microwave Devices and Circuits Laboratory, at Hughes Research Laboratories, where I directed research in high-speed III-V materials, devices, and

circuits, and was responsible for approximately $4M/yr. in Corporate IR&D and Government Research Contracts. In that capacity, I helped develop the first space-qualified InP low-noise millimeter wave HEMT. This effort was awarded the 1996 Lawrence Hyland Award - the highest technical achievement award at Hughes Electronics. I also helped develop the first micromachining (MEMS) switch and tuner applications for RF and microwave applications (1991). This technology has now become an extremely active area of worldwide research and development. I also helped demonstrate the first InP-based HEMT low-noise and high- power MMICs from 2 - 60 GHz, with world record noise figures and power-added efficiencies. I further helped establish a state-of-the-art InP HEMT MMIC foundry at HRL, developed the first low-power/high-speed InP HEMT digital IC technology with ring oscillator delays of 4.2 pS, and directed the research program that demonstrated HEMTs with record fT's and fMAX's above 300 GHz (1993), which produced the highest frequency room temperature integrated circuit ever reported - a 210 GHz VCO (IEDM 1994).

16. From 1994 to 1996, I was a Manager in the Telecommunications Technology Department, Microwave Devices and Circuits Laboratory, at Hughes Research Laboratories, where I directed the research and development of integrated circuits for commercial RF and microwave communications applications, including DBS, cellular telephone, VSAT, and PCS.

17. From 1996 to 2011, I held the CWC Industry Chair Professor in Wireless Communications, in the Department of Electrical and Computer Engineering at the University of California, San Diego (UCSD). Among other things, I helped develop improved integrated circuit techniques and novel device structures for wireless communications applications. This required development of high-frequency integrated circuits, devices, and packaging techniques for ultra-wide bandwidth telecommunications applications, and development of novel data converter and analog-signal processing architectures that are matched to communications applications.

18. From 2000 to 2001, while on academic leave from UCSD, I was a Director at IBM's West Coast Design Center of Excellence in IBM Research Division, where I directed development of Radio Frequency Integrated Circuits for SiGe RFICs for 3rd Generation wireless cellular applications. I was also responsible for leading the team that developed a complete Wideband CDMA chip set for several "first tier" cellular telephone providers.

19. From 2001 to 2006, I was the Director of the UCSD Center for Wireless Communications (http://cwc.ucsd.edu), which is one of the largest industry-funded University Research Centers in the world. Involving over 20 professors, and supporting roughly 50 PhD graduate students during my tenure, with an annual budget in excess of $3M, the CWC conducted research in all areas of wireless

communications, from fundamental devices and materials to software applications. I was responsible for all aspects of the Center, from new member development to financial management and establishing the research direction.

20. From 2007 to 2011, I was the Chair of the Department of Electrical and Computer Engineering at the University of California, San Diego. The ECE Department at UCSD is the largest graduate program on the UCSD campus. As Chair, I oversaw the faculty development (hiring, promotion, and tenure process), educational policy and teaching, successful accreditation review, department resource allocation, and external relations. I also led the development (with CS) of the Executive Masters of Advanced Study in Embedded Wireless Systems program.

21. I have authored more than 125 refereed journal publications and more than 250 peer reviewed conference publications. I have authored and/or edited 12 books or chapters, including:

- L. E. Larson, P. T. Greiling, and J. F. Jensen, "GaAs Device Physics and Circuit Design", in **Microprocessor Design for GaAs Technology**, V. Milutinovic, Ed., (Prentice Hall, York, 1989).
- L. E. Larson, "High-Speed Analog-to-Digital and Digital-to-Analog Conversion with GaAs Technology: Prospects, Trends, and Obstacles", in **GaAs Technology and Devices and Their Impact on Circuits and Systems**, D. Haigh, Ed., (Peter Peregrinus, Ltd, 1989).
- L. E. Larson and G. C. Temes, "Signal Conditioning and Interface Circuits", in **McGraw-Hill Handbook of Digital Signal Processing**, S. Mitra, Ed., 1993.

- L. E. Larson, "GaAs Operational Amplifier Design", in **High-Speed Analog Integrated Circuits**, R. Goyal, Ed., (Wiley Interscience, York, 1995).

- L. E. Larson, **RF and Microwave Circuit Design for Wireless Communications** (Artech House, Inc., 1996).

- M. Matloubian and L. E. Larson, "InP-Based Power HEMTs", in **Pseudomorphic HEMT Technology and Applications**, Ed. R. L. Ross et al., (Kluwer Academic Publishers, Netherlands, 1996).

- J. Groe, and L. E. Larson, **CDMA Mobile Radio Design: Systems, Algorithms, and Circuits** (Artech House, Inc., 2000).

- L. Larson and F. Chang, "Si/SiGe HBT Technology for Low-Power Mobile Communications Systems Applications," **in RF Technologies for Low-Power Wireless Communications**, Ed. T. Itoh, G. Haddad, and J. Harvey, Wiley Interscience, 2001.

- X. Zhang, L. Larson, and P. Asbeck, **Design of Linear Outphasing Power Amplifiers for Wireless Communications**, Artech House, 2002. 196 pages. BOOK

- **Digital Communications Using Chaos and Nonlinear Dynamics**, Larson, Lawrence E; Liu, Jia-Ming; Tsimring, Lev S. (Eds.) 2006, XIV, Springer.

- **Circuits and Systems for Future Generations of Wireless Communications**, A. Tasic, W. Serdijn, L. Larson, G. Setti, G. (Eds.), 2009, VIII, Springer.

- **Fast Hopping Frequency Generation in Digital CMOS**, Mohammad Farazian, Lawrence E. Larson, Prasad S. Gudem. 2012 Springer.

I am also named inventor on at least 43 US patents.

22. I have been elected a Fellow of the IEEE. The Fellow is the highest grade of membership of the IEEE, a world professional body consisting of over 300,000 electrical and electronics engineers, with only one-tenth of one percent (0.1%) of the IEEE membership being elected to the Fellow grade each year. Election to Fellow is based upon votes cast by existing Fellows in IEEE. I have also served on a number of IEEE Committees and as a Paper Reviewer.

23. EX2006 contains a true and correct copy of my *Curriculum Vitae* further describing my background and experience.

UNDERSTANDING OF RELEVANT LEGAL STANDARDS

24. In forming my opinions here, I have applied the following understanding of certain legal concepts related to anticipation, obviousness, combinations of references, and knowledge of one of ordinary skill in the art. This understanding was supplied to me by counsel.

25. I understand that in order for a patent claim to be invalid as anticipated by a prior art reference, each and every element of that patent claim must be found disclosed in that reference, explicitly or inherently, to a person of ordinary skill in the art. Inherent disclosure requires that the claimed element be the only possible option given the other disclosures of the reference. If any single element of a claim is not disclosed in the reference, the entire claim is not anticipated.

26. I understand that a patent may be invalid if the differences between the claimed subject matter and the prior art are such that the subject matter as a whole would have been obvious at the time the invention was made to a person of ordinary skill in the pertinent art.

27. I understand that a person of ordinary skill in the art provides a reference point from which the prior art and claimed invention should be viewed. This reference point prevents one from using his or her own insight or hindsight in deciding whether a claim is obvious.

28. I also understand that an obviousness determination includes the consideration of various factors such as (1) the scope and content of the prior art; (2) the differences between the prior art and the asserted claims; (3) the level of ordinary skill in the pertinent art; and (4) the existence of secondary considerations such as commercial success, long-felt but unresolved needs, failure of others, etc.

29. I understand that in considering the scope and content of the prior art, references must be reasonably related (i.e., analogous) to the claimed invention of that patent.

30. I understand that the test for determining whether a prior art reference constitutes analogous art to the claimed invention is (1) whether the reference is from the same field of endeavor, regardless of the problem addressed and, (2) if the

reference is not within the field of the inventor's endeavor, whether the reference still is reasonably pertinent to the particular problem the inventor is trying to solve.

31. I also understand that the existence of each and every element of the claimed invention in the prior art does not necessarily prove obviousness of the combination of those elements, and that inventions usually rely on building blocks of prior art.

32. I understand that one may consider whether a reason existed at the time of the invention that would have prompted a person of ordinary skill in the art in the relevant field to combine the known elements in the way the claimed invention does. The reason could come from the prior art, the background knowledge of one of ordinary skill in the art, the nature of the problem to be solved, market demand, or common sense. But it cannot come from hindsight.

33. I understand that in considering whether a claimed invention is obvious, one may, but is not required to, find obviousness if at the time of the claimed invention there was a reason that would have prompted a person having ordinary skill in the field of the invention to combine the known elements in a way the claimed invention does, taking into account such factors as: (1) whether the claimed invention was merely the predictable result of using prior art elements according to their known function(s); (2) whether the claimed invention provides an obvious solution to a known problem in the relevant field; (3) whether the prior art teaches

or suggests the desirability of combining elements claimed in the invention; (4) whether the prior art teaches away from combining elements in the claimed invention; (5) whether it would have been obvious to try the combinations of elements, such as when there is a design need or market pressure to solve a problem and there are a finite number of identified, predictable solutions; and (6) whether the change resulted more from design incentives or other market forces. To find it rendered the invention obvious, the prior art must provide a reasonable expectation of success. Obvious to try is not sufficient in unpredictable technologies.

34. I understand that each claim must be evaluated separately for obviousness, and that it is improper to use hindsight. In other words, one must consider only what was known at the time of the invention.

35. I understand that, when present, secondary indicia of non-obviousness must always be considered and can serve as an important check on hindsight bias. These factors may include (1) a long felt but unmet need in the prior art that was satisfied by the invention of the patent; (2) commercial success or lack of commercial success of processes covered by the patent; (3) unexpected results achieved by the invention; (4) recognition and praise of the invention by others skilled in the art; (5) taking of licenses under the patent by others; (6) skepticism, disbelief in or incredulity on the part of those skilled in the art that the patentee's approach worked; (7) rapid replacement of the prior art devices in the industry; (8)

unsuccessful attempts by those skilled in the art to make the invention; (9) teaching away by those skilled in the art; and (10) deliberate copying of the invention. I also understand that there must be a relationship, or nexus, between any such secondary indicia and the invention.

36. I have been informed and understand that the obviousness analysis requires a comparison of the properly construed claim language to the prior art on a claim-by-claim basis.

37. I understand that questions of fact concerning obviousness, such as the knowledge of a person of skill in the art, ordinarily must be proven by clear and convincing evidence. For an obviousness combination, obviousness must be proven by clear and convincing evidence such that a person of ordinary skill in the art at the time of the alleged invention would have had a reason (or reasons) for combining the teachings of those prior art references to achieve the claimed invention, and that same person of ordinary skill in the art would have had a reasonable expectation of success from combining those teachings.

38. I understand that the disclosures in a patent or prior art reference are viewed from the perspective of a person of ordinary skill in the art at the time of the invention.

39. I understand that a person having ordinary skill in the art is a hypothetical person and the concept is used to analyze the relevant art without the

benefit of hindsight. A person of ordinary skill in the art is presumed to be one who thinks along the lines of conventional wisdom in the art. I understand that the hypothetical person of ordinary skill is presumed to have knowledge of all references that are sufficiently related to one another and to the pertinent art, and to have knowledge of all arts reasonably pertinent to the particular problem that the claimed invention addresses.

THE TSIVIDIS PATENTS

40. I have reviewed each Tsividis Patent (EX1001 to each Petition) and their file histories (EX1002 to each Petition). The parent '330 Patent issued from U.S. Patent Application No. 10/784,613, which was filed on February 23, 2004. And each of the Tsividis Patents claims priority to effective priority date of U.S. Provisional Application Nos. 60/451,229 and 60/451,230, filed March 1, 2003.

41. In the early 2000s, wireless connectivity was becoming increasingly prevalent – in cellular phones, laptops, etc. Reducing power consumption in cellular phones—in order to increase battery life and increase the length of time that the device could operate before recharging—was an ever-present concern.

42. As explained in the Tsividis Patents, electronic circuits are generally designed to function under "worst-case" operating conditions. A worst-case operating condition occurs when reception of a desired signal is low while interfering signals and spurious noise are high. These conditions are typically

accompanied by a worst-case power consumption because of the need for increased amplifier gain and bias and impedance changes to achieve and maintain adequate connectivity.

43. The Tsividis Patents recognize that a wireless transceiver does not always operate in these worst-case conditions—such as when the received signal is strong or interfering signals are weak or non-existent. In these improved conditions, dynamic adjustments can be made to circuits (which the patents refer to as function blocks) or their components, to reduce power. For example, receiver circuit bias currents can be reduced below what is necessary for the worst-case condition. As another example, signal path circuit or component impedances can be raised, introducing some additional noise but also reducing current consumption. As a third example, gain can be reduced, also reducing current consumption in amplifier circuits. The patents explain that if these adjustments are done appropriately, power dissipation is reduced while signal-to-noise ratio is appropriately managed, increasing battery life.

44. Professor Tsividis' patented inventions use bias current control, varying impedance, gain, and other dynamic changes (separately or in combination) to reduce power dissipation when conditions are better than a worst-case. For example, they describe reducing bias currents in response to a need for reduced signal handling capability; or varying/controlling impedances in the signal path

thereby reducing required drive and other bias currents in response to a strong received signal; or varying gain and/or impedances in response to a received signal in the presence of interfering signals that are weak or non-existent.

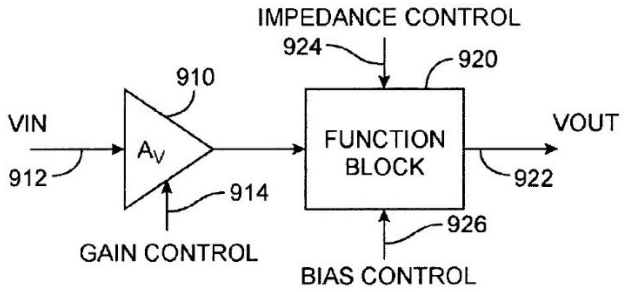

FIG. 9A

45. The Tsividis Patents teach various implementations of these inventions. Information about the desired signal and interferer signal is used to adjust the operating characteristics of circuits or their components in the receiver's signal path—for example, the amplifier(s), mixer(s), and/or filter(s)—relative to a worst-case condition. The patents describe multiple separate adjustments, dynamically changing operating parameters, including bias current, impedance, and gain, either separately or in combination, to reduce power dissipation in better-than-worst case conditions. This allows for significant reduction in the power consumed by wireless receivers by responding to the changing signal spectrum conditions experienced by the mobile device.

46. The Tsividis Patents teach these adjustments as changes effected in a single circuit block. *See, e.g.*, '330 patent, 8A, 9A ("Function Block"), 8:20-25 ("Functional block 820, like the functional blocks in the following diagrams, may be a filter, mixer, amplifier, or other circuit"), 8:36-39 ("one or more bias currents in the function block are under control of one or more signals on bias control lines 826"), 9:36-59 ("one or more impedance in the function block 920 may be increased"), 10:1-18 ("the noise floor is increased by increasing impedances in the function block 1020"). The patents refer to adjustments in or to a single circuit. *See, e.g.*, *id.* 7:44-46 ("FIG. 6 is an example of how ***a circuit's*** impedances may be scaled"), 7:57-59 ("In this way, an impedance can be scaled in order to decrease ***a circuit's*** required drive current.").

47. Language of the challenged claims also refers to adjustments as occurring within a single circuit—and many specify a circuit within "the signal path." *See, e.g.*, '330 Patent, 12:57-67 (claim 1: "dynamically changing an impedance of a component in the signal path"), 14:15-28 (claim 23: "an impedance in the signal path is configured to be dynamically adjusted"), 13:10-22 (claim 9: "component … included in the low-pass filter"). In my opinion, a person of ordinary skill in the art would readily understand this claim language to be referring to dynamic adjustments made to a parameter (*e.g.*, "an impedance" or "a bias current" or gain) of a circuit via the internal components or structure of one circuit block.

ONE OF ORDINARY SKILL

48. I have been asked to provide my opinion of the level of education and experience that would have been possessed by one of ordinary skill in the art at the time of the ’330 Patent, which I take for purposes of this declaration to be as of the current earliest undisputed priority date on March 1, 2003. I understand that factors such as the education level of those working in the field, the sophistication of the technology, the types of problems encountered in the art, prior art solutions to those problems, and the speed at which innovations are made, may help establish the level of skill in the art at the time.

49. I have previously considered and given an opinion on this question with respect to the Tsividis Patents in District Court case *Theta IP, LLC v. Samsung Electronics Co. Ltd.*, No. W-20-CV-00160-ADA (W.D. Tex.), as well as in IPR2023-00694, -00697, and -00698, and my opinion has not changed.

50. In my opinion, a person of ordinary skill in the art would have at least a Bachelor’s Degree in Electrical or Electronics Engineering, and approximately five years of relevant experience in the design of transceiver architecture, RF systems and components, and analog and mixed signal circuits, as well as experience in control algorithms for such system and familiarity with wireless standards—with additional education substituting for experience and vice versa.

51. As described above, I obtained my Ph.D. in Electrical Engineering in 1986, and I had more than fifteen years of professional experience in the analysis and design of high-performance RF circuits prior to the priority date of the Tsividis Patents. I believe that my own education and experience exceeds that of a person of ordinary skill in the art, under my definition or Apple's definition, today and as of March 1, 2003.

52. I understand that Professor Abidi's declarations give a definition of a person of ordinary skill in the art that is similar to mine, but that substitutes a requirement for a Master's degree for less professional experience. *See, e.g.*, IPR2024-00816, EX1003, ¶40 ("a master's degree in electrical engineering, or an equivalent, and two or more years of experience with wireless communications devices").

53. I disagree with Professor Abidi about his opinions concerning what a person of ordinary skill would find disclosed or obvious from the prior art, as detailed below. I have considered both his and my opinion concerning the level of skill, and my opinions as expressed in this declaration do not change if I instead apply his definition. For example, no person of skill with a degree in Electrical Engineering, and any professional experience with RF electronics, would find disclosure of dynamically adjusting an impedance or bias of a single circuit block in

a signal path, from the static filter swap of the *Behbahani* papers that Apple and Professor Abidi identify.

THE BEHBAHANI PAPERS

54. I have reviewed EX1004, EX1005, and EX1006, which purport to be academic papers published in the IEEE Journal of Solid-State Circuits between April 2000 and August 2001. I understand these to be papers discussing research at UCLA supervised by Professor Abidi, who is listed as a co-author on each. I understand that Apple has referred to these as *Behbahani* (EX1004), *Leete* (EX1005), and *Tan* (EX1006). For convenience I will also refer to them collectively as "the *Behbahani* papers."

55. The *Behbahani* papers describe aspects of circuits for use in "a Wide-Band CMOS Wireless Receiver" for wireless communication, in particular directed to a 2.4GHz WLAN band. *See, e.g.*, EX1004, 1205. Implementing high-speed wireless communication in CMOS technology was a very active area of research and development for many universities and companies in the early 2000s, because it was understood that CMOS technology would have significant commercial benefits if it could be successfully utilized at these frequencies. The *Behbahani* papers discuss the need for "an RX design with the largest possible [dynamic range] DR" and that "the [band-pass filter] BPF is usually the bottleneck to DR." *See, e.g.*, *id.*

56. Behbahani and his colleagues addressed this challenge—of designing a filter that could handle sufficient dynamic range—by instead including two filters, one a version of the other but scaled up ten times. *Id.* at 1207 (emphasis added):

> In the first two instances [Fig. 3(a) and (b)], a BPF dissipating low power is employed for nominal RX DR. However, in the worst-case scenario, ***the high-power scaled filter is switched in*** raising total DR. Since the worst-case scenario is infrequent, the low-power filter determines the average RX power consumption.

The *Behbahani* papers discuss this as a "switch" or "substitution" of circuit blocks. *Id.* at 1205 ("adaptive use of circuit blocks"), 1206 ("substituting a scaled version of a nominal circuit"), Fig. 4(b) ("substitution of a scaled circuit block"):

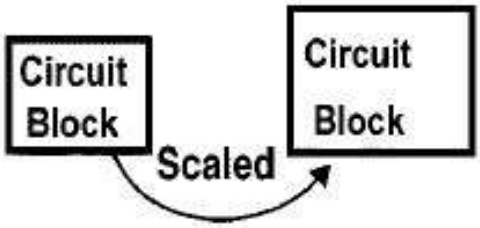

(b)

57. Although not shown in the figures, a person of ordinary skill in the art would understand that the "substitution" of filter circuit blocks that *Behbahani* discloses involves changing the signal path—to remove the first circuit block from the path, turning it off to save power, and instead turning on and sending the signal through the second circuit block. *Id.,* 1213 ("the high-power, low-noise LPF is now activated"), Fig. 4 (excerpts annotated below to show alternative signal paths):

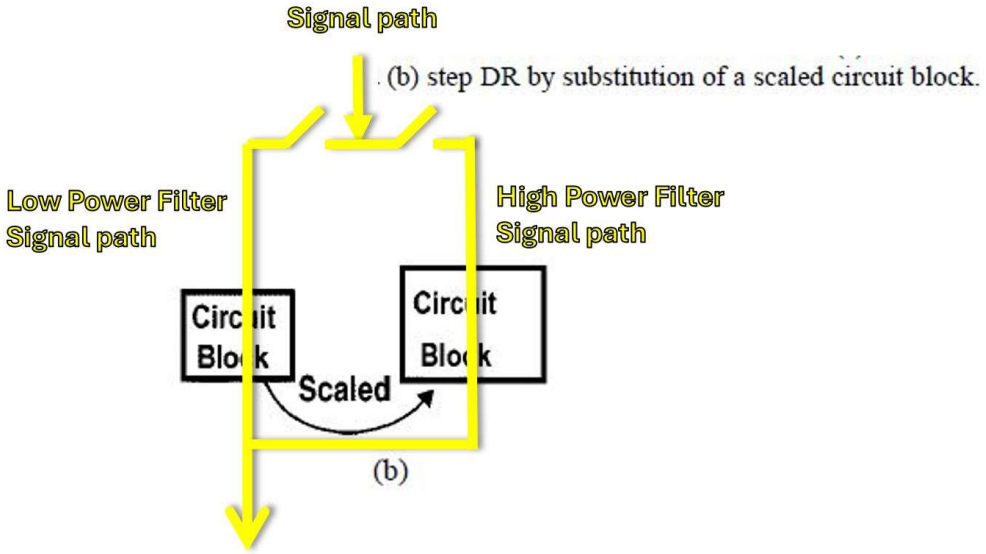

Behbahani acknowledges that this approach causes an "abrupt switch from the low-power to the high-power filter" that "causes the [bit error rate] BER to increase momentarily." *Id.* at 1207; *see also id.* at Fig. 18(a) (showing a large step up in power consumption on the switch between the low-power and high-power low-pass filter "LPF" circuits).

58. The *Tan* paper shows a microphotograph depicting the two [low-pass filter] LPF circuits, and explains that the high-power filter circuit draws about ten times more power. EX1006, 486 ("drain 5.4 and 56 mA from 3.3 V, respectively"), Fig. 16:

486

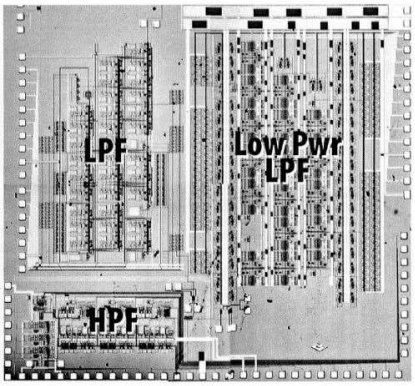

Fig. 16. Chip microphotograph.

PROFESSOR TSIVIDIS' 2003 ARTICLE

59. I have reviewed EX1011, which is an article by Professor Tsividis and colleagues titled "Internally Varying Analog Circuits Minimize Power Dissipation," that was published in the IEEE Circuits and Devices Magazine in January of 2003.

60. The 2003 article broadly discusses and suggests methods for implementing "internally varying" circuits in order to reduce power across the operating range of portable, battery-operated devices—as opposed to designing for the worst-case operating conditions. EX1011, 63.

61. Among many other techniques and potential approaches to the design problems being discussed, the 2003 article discusses and cites to *Behbahani* and its filter swap. *Id.*, 70 ("One way to achieve the above scenario would be to use two filters, designed with different capacitance values, place one or the other in service as required [34], turning the other filter off."). Immediately after this, Professor

Tsividis mentions some drawbacks to this approach, including the fact that it "causes transients at the output, which may take a long time to die out," and can result in errors and "loss of data." *Id.* The article then goes on to suggest an improvement over *Behbahani*, namely "delayed output switching," in which both filters are turned on for a hand-off period. *Id.*, 70, Fig. 11:

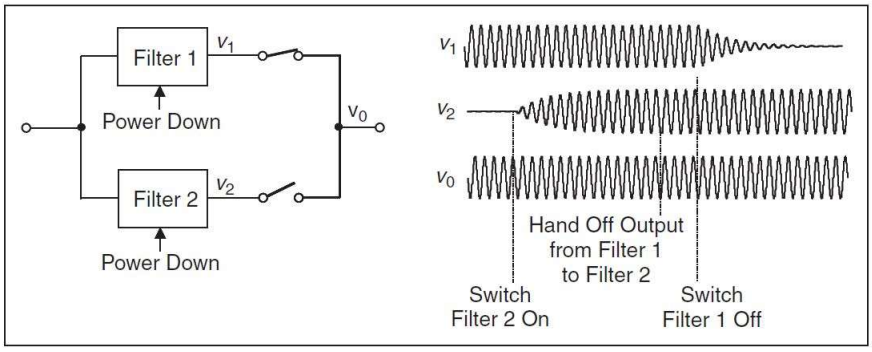

11. Method to switch between two signal processors with the same input-output behavior, without causing output transients.

This improvement still has the drawback of "delay" for implementing the handoff. *Id.*

62. Immediately thereafter, the 2003 article discusses yet another alternative solution and improvement over the *Behbahani* approach, namely "individual element switching." *Id.* at 70 ("One can diminish the delay involved above by switching individual filter elements rather than entire filters. An example is shown in Figure 12"). The article discusses individual resistors and capacitors being "switched out of the circuit," referring to Figure 12 and the section below on

"dynamic biasing." *Id.*, at 71-71, Fig. 12 (annotated below to show signal path in yellow):

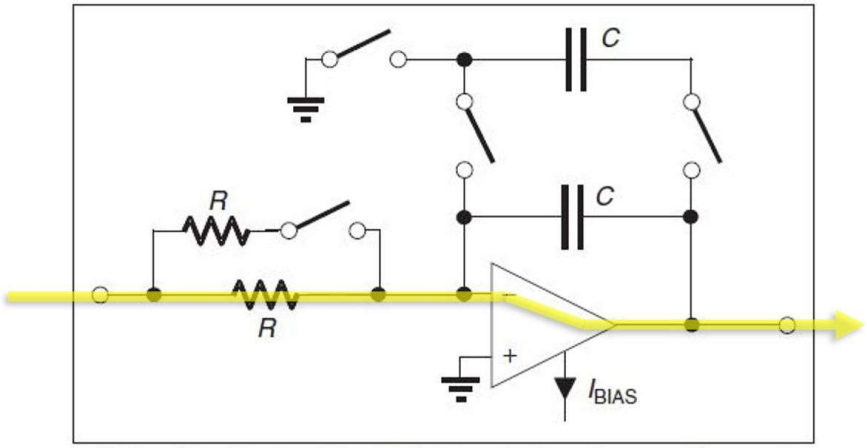

12. An active RC circuit in which dynamic impedance scaling can be performed without causing output transients.

Figure 12 is captioned "An active RC circuit in which dynamic impedance scaling can be performed without causing output transients" and referred to as an example of "dynamic impedance scaling (Figure 12)." *Id.* at 71. It is included in a section titled "Dynamic Structure Variation." *Id.* The article mentions the possibility of using "a single filter and vary[ing] its structure dynamically," and notes that "this approach has not been investigated to any extent yet." *Id.* at 71-72.

63. In my opinion, a person of ordinary skill in the art would understand from Professor Tsividis' 2003 article that this approach discussed therein—of "dynamic biasing" or "dynamic impedance scaling" a single circuit by varying its internal structure—was different from, and a potential improvement upon, the hard switch between two completely separate filters as disclosed in *Behbahani*.

64. The article teaches that the different approach proposed by Professor Tsividis—adjusting bias or impedance through internal, structural, variation of a circuit block—could be accomplished "dynamically, without interrupting the filter operation," and "without causing major output disturbances." *See, e.g.*, EX1011, 70-71, Fig. 3 (detail below), Fig. 13 (annotated below to show effect of adjusting bias within a single circuit during operation):

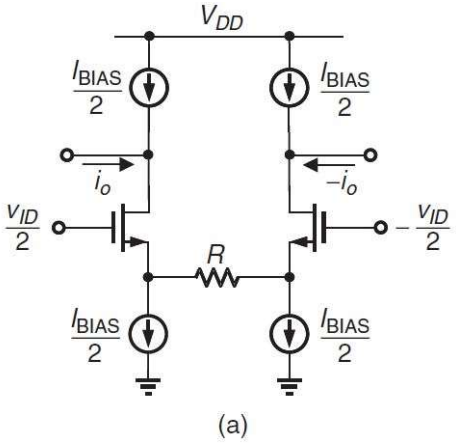

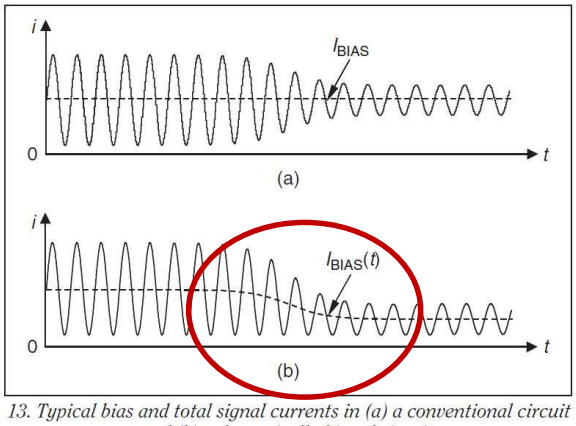

13. Typical bias and total signal currents in (a) a conventional circuit and (b) a dynamically biased circuit.

SPECIFIC RESPONSES TO PROFESSOR ABIDI'S OPINIONS

65. Apple and Prof. Abidi point to the filter swap of *Behbahani* as supposedly disclosing the elements requiring variation of impedance, and bias current, as in the challenged claims of the Tsividis Patents. *See, e.g.*, IPR2024-00816, EX1003, ¶¶107, 124, 127. I disagree, for multiple reasons.

66. As I stated above, Professor Tsividis' 2003 article teaches a person of ordinary skill about the differences—and relative advantages and disadvantages—

between adjusting the internal structure or components of a single filter or other circuit block, and *Behbahani*'s swap of a completely different filter circuit block into the signal path. A person of ordinary skill would understand that these are different approaches, and that *Behbahani*'s filter substitution does not teach or suggest the challenged claim language.

67. A person of ordinary skill would understand from the *Behbahani* papers that the switch from one low-pass filter (LPF) to another low-pass filter changes the signal path through the receiver, and that the unused filter is turned off to save power. *See, e.g.*, EX1006, Fig. 16 (annotated below to show alternative signal paths):

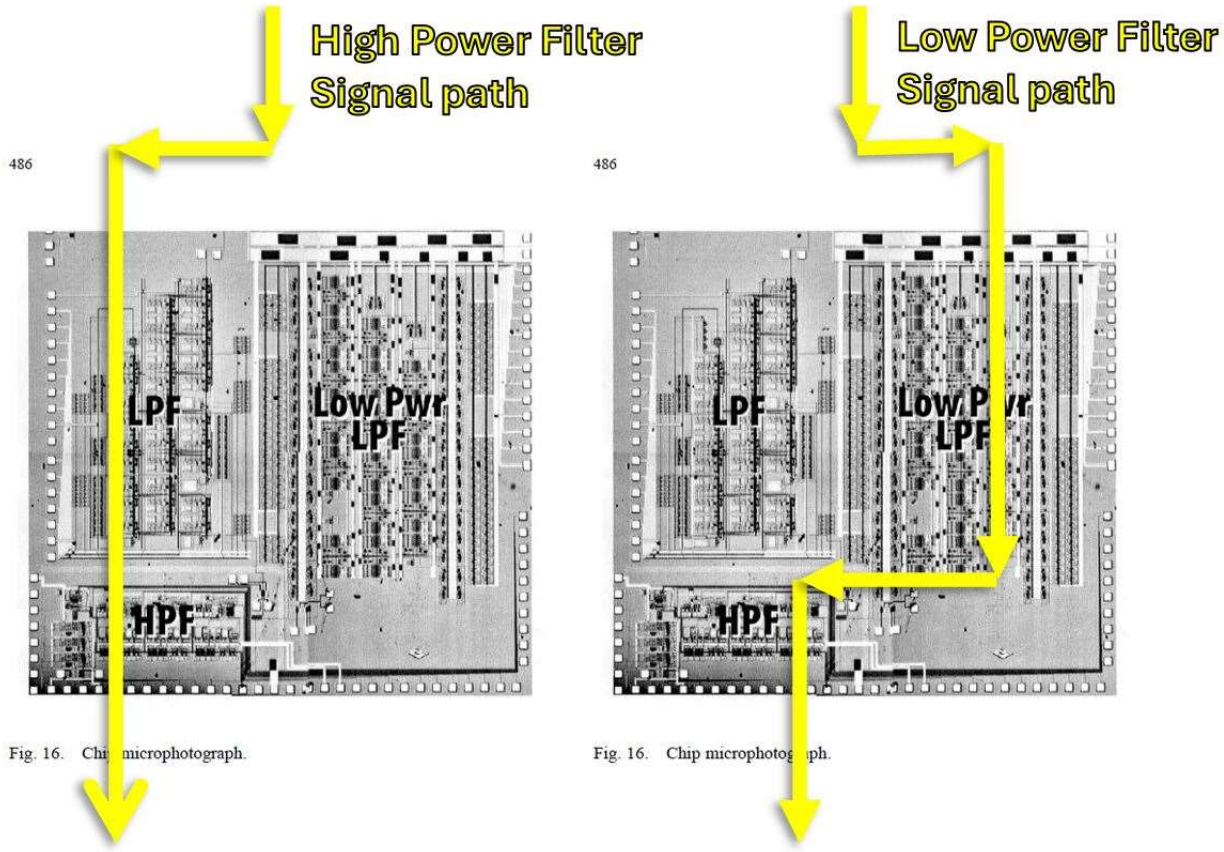

68. A person of ordinary skill in the art would understand that the impedance, and the bias current required for operation, of each of *Behbahani*'s filters is not changed by virtue of being switched into the signal path or turned off. Each filter is described as having been designed for a particular impedance and current consumption. *See, e.g.*, EX1004, 1207 ("Two filters are implemented with the same topology, but one, scaled up to consume 10x more power, offers 10x lower mean square noise but the same linearity."); EX1006, 486 ("drain 5.4 and 56 mA from 3.3 V, respectively"). The impedance and required bias of the low-power filter is not changed by *Behbahani*'s filter substitution. The impedance and required bias of the high-power filter is not changed by *Behbahani*'s filter substitution.

69. As I discussed above, the teachings and challenged claim language of the Tsividis Patents would be understood by a person of ordinary skill in the art to be referring to impedance and bias current adjustments made dynamically for a single function block, such as a filter—in other words, adjustments to an impedance or a bias current in or for a particular circuit. *See, e.g.*, '330 patent, Fig. 9A:

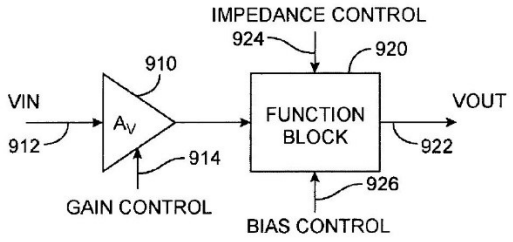

FIG. 9A

This is not the same approach as the filter block substitution of *Behbahani*, in which the impedance, and bias current, of each filter is static and does not change.

70. To give an illustrative example, *Behbahani*'s filter swap is like replacing a 25W light bulb with a 100W light bulb. While the room may be brighter and more power may be used after the switch, the brightness and the current draw parameters of each light bulb, when powered on, did not change; they remain 25W or 100W bulbs. By contrast, the dynamic variation elements of the challenged claims are like installing a <u>single</u> dimmable light bulb with a dimmer control to adjust its brightness.

71. I also note that while Professor Abidi opines that "*Behbahani's* switch from high-power to low-power filter does in fact increase the signal path impedance" (*see, e.g.*, IPR2024-00816, EX1003, ¶124), he never appears to apply the claim language or opine that this increase to the signal path impedance meets the claim elements. In my opinion the challenged claim language is not met, because no

impedance of any circuit block changes by virtue of the block being switched in or out of the changed signal path in *Behbahani's* filter swap, as discussed above.

72. Similarly, while Professor Abidi opines that "the DC bias current is lower when the low-power filter is in use" (*see, e.g.*, IPR2024-00816, EX1003, ¶127), he never appears to apply the claim language or opine that the bias current for either circuit is dynamically adjusted or changes. In my opinion the challenged claim language is not met, because no bias current of any circuit block changes by virtue of the block being switched in or out of the changed signal path in *Behbahani's* filter swap—other than being turned on or off, as discussed above.

73. For these reasons, it is my opinion that the elements of claims of the Tsividis Patents that require dynamically adjusting or varying an impedance, or a bias current, are not disclosed by the *Behbahani* papers. It is also my opinion that these impedance or bias varying elements would not be obvious to a person of ordinary skill in the art from the filter swap teachings of the *Behbahani* papers, which instead discuss a different, and less optimal solution.

74. Each of the challenged claims includes a requirement to adjust an impedance or bias current within a circuit—also referred to as "dynamically" changing, and also variously referring to an adjustment to a circuit in the signal path. The hard filter swap disclosed in *Behbahani* is not such a solution, and would not be understood to be. For all of the reasons given herein, in my opinion the challenged

claims of the Tsividis Patents all contain elements that are not anticipated by the *Behbahani* papers, and the challenged claims are also not rendered obvious by the *Behbahani* papers, alone or in the combinations described in the Petitions.

CONCLUSION

75. This declaration and the opinions and statements herein are made to the best of my knowledge and understanding, based on the material available to me at the time. All statements made on my knowledge herein are true and all statements made on my belief are believed to be true.

Executed this 27th day of August, 2024 in Providence, Rhode Island.

By: _____
Lawrence E. Larson, Ph.D