Trials@uspto.gov
571-272-7822

Paper 32
Entered: October 16, 2024

UNITED STATES PATENT AND TRADEMARK OFFICE

BEFORE THE PATENT TRIAL AND APPEAL BOARD

LENOVO (UNITED STATES) INC. and
MOTOROLA MOBILITY LLC,
Petitioner,

v.

THETA IP, LLC,
Patent Owner.

IPR2023-00697
Patent 10,129,825 B2

Before JEFFREY S. SMITH, THOMAS L. GIANNETTI, and BARBARA A. BENOIT, *Administrative Patent Judges*.

BENOIT, *Administrative Patent Judge*.

JUDGMENT
Final Written Decision
Determining No Challenged Claims Unpatentable
35 U.S.C. § 318(a)

I. INTRODUCTION

In this *inter partes* review instituted pursuant to 35 U.S.C. § 314, Lenovo (United States) Inc. and Motorola Mobility LLC (collectively, "Petitioner") challenge the patentability of claims 1, 3, 4, and 8 ("the challenged claims") of U.S. Patent No. 10,129,825 B2 (Ex. 1001, "the 825 patent"), owned by Theta IP, LLC ("Patent Owner").

We have jurisdiction under 35 U.S.C. § 6. Having reviewed the arguments of the parties and the supporting evidence, we determine that Petitioner has not proven by a preponderance of evidence that any of the challenged claims are unpatentable for the reasons set forth in this Final Written Decision pursuant to 35 U.S.C. § 318(a).

A. Procedural History

Petitioner filed a Petition requesting *inter partes* review of the challenged claims (Paper 1, "Pet."), to which Patent Owner filed a Preliminary Response (Paper 9). On October 23, 2023, we instituted *inter partes* review as to all challenged claims on all grounds asserted by Petitioner. Paper 10 ("Dec." or "Institution Decision").

Subsequent to institution of the trial, Patent Owner filed a Response (Paper 15; PO Resp."), Petitioner filed a Reply (Paper 20, "Pet. Reply"), and Patent Owner filed a Sur-reply (Paper 22, "PO Sur-reply"). Additionally, Petitioner filed a Motion to Exclude certain exhibits filed by Patent Owner (Paper 26; "Motion"), Patent Owner filed an Opposition to Petitioner's Motion (Paper 27; "Opposition), and Petitioner filed a Reply to Patent Owner's Opposition (Paper 28; "Reply to Opp.").

A consolidated oral hearing with IPR2023-00698 was held on July 24, 2024. A transcript of the hearing is part of the record. Paper 31 ("Tr." or "Transcript").

B. Real Parties-in-Interest

Petitioner identifies Lenovo (United States) Inc., Motorola Mobility LLC, and Lenovo Group Ltd as real parties in interest. Pet. 1. Patent Owner identifies itself as a real party in interest. Paper 4 (Patent Owner's Mandatory Notices), 2.

C. Related Matters

As required by 37 C.F.R. § 42.8(b)(2), each party identifies various judicial or administrative matters that would affect or be affected by a decision in this proceeding. Pet. 3; Paper 4, 2. The parties each identify *Theta IP, LLC v. Motorola Mobility LLC*, No. 1:22-cv-03441 (N.D. Ill.). Pet. 1; Paper 4, 2. Patent Owner additionally identifies two concluded cases: *Theta IP, LLC v. Samsung Electronics Co.*, No. WA:20-cv-00160 (W.D. Tex.) and *Theta IP, LLC v. Samsung Electronics Co.*, No. 2:16-cv-527 (E.D. Tex.) that involved a patent related to the '825 patent. Paper 4, 2.

The parties also each identify two concurrently filed petitions challenging different patents: IPR2023–00694 and IPR2023–00698. Pet. 1–2; Paper 4, 2. In IPR2023-00694, a trial was not instituted for a petition challenging U.S. Patent No. 7,010,330. *See* IPR2023-00694, Paper 10 (decision denying institution of *inter partes* review). Trial was instituted for a petition challenging U.S. Patent No. 10,524,202 in IPR2023–00698. *See* IPR2023-00698, Paper 10 (decision instituting *inter partes* review).

D. The '825 Patent

The '825 patent is titled "Power Dissipation Reduction in Wireless Transceivers." Ex. 1001, code (54). The patent relates to "improving battery life by reducing battery power-drain of battery-powered devices using wireless transceivers." Ex. 1001, code (57).

1. The Written Description

The patent describes drain on battery life resulting from power consumed by wireless transmitters and receivers on various types of mobile devices. *Id.* at 1:22–33. According to the patent, a reason for high power drain "is that electronic circuits are typically designed to function properly under worst-case operating conditions . . . when a desired signal reception strength is low, while other transceivers or nearby electronic equipment generate interfering signals, and other spurious noise." *Id.* at 1:34–40. The patent explains that "[w]hen a receiver is actively received a desired signal, each block in the signal path has at its input the desired signal as well as noise and possibly interfering signals" or "interferers." *Id.* at 5:20–22, 28–30. "The desired signal is the useful, information-carrying portion of a received signal." *Id.* at 5:22–24. Figures 2A and 2B, reproduced below, show desired signals and interfering signals that may be received by a circuit in a wireless receiver.

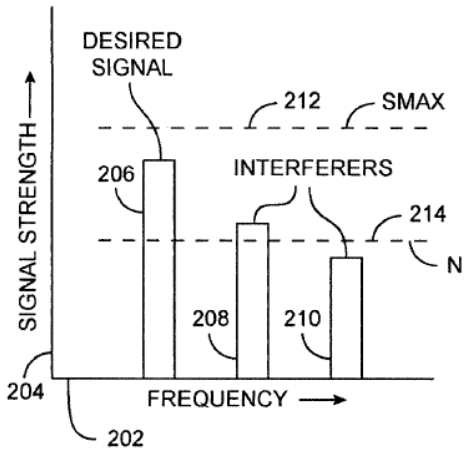

FIG. 2A

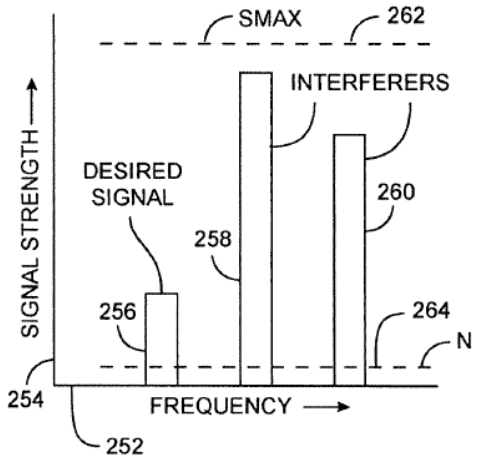

FIG. 2B

Id. at 5:31–33, Figs. 2A, 2B.

As shown in Figure 2A, "received desired signal 206 is large in comparison to interfering signals 208 and 210," which represents "the best-case input signal." *Id.* at 5:36–37, 6:14–15. The best-case input signal is "a robust desired signal accompanied by no or low-level interferers." *Id.* at 6:15–16. In such a case, the receiver circuit can save significant power by allowing noise floor 214 to rise and reducing the maximum signal power that can be handled with an acceptably low distortion (Smax 212). *Id.* at 6:16–19, 5:46–48. For example, bias currents may be lowered to reduce the maximum signal handling capability. By contrast, as shown in Figure 2B, received "desired signal 256 is relatively weak compared to the large interferers 258 and 260," which "is generally considered the worst-case input signal." *Id.* at 5:54–56, 6:6–7.

Figure 4 is reproduced below and illustrates "a portion of a receiver consistent with an embodiment of the present invention."

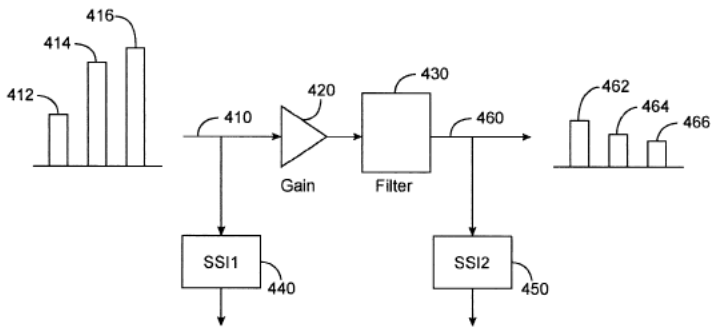

FIG. 4

Ex. 1001, 6:50–51.

In the example of Figure 4, "input signal spectrum on line 410 is shown as desired signal 412 and interferers 414 and 416" and the "signal spectrum at the output line 460 is shown as desired signal 462 and interferers 464 and 466." *Id.* at 6:55–59. Included in the portion of the receiver shown in Figure 4 is "optional gain element 420 [that] is placed in front of the filter 430 in order to increase signal levels." *Id.* at 6:52–53.

In the example shown in Figure 4, the patent explains that a "comparison of the signal levels provided by signal strength indicators 440 and 450 indicates that much of the combined received signal on line 410 has been filtered." *Id.* at 7:4–6. This indicates "that large interfering signals present in the input are being filtered by filter 430," which allows optimizing "the bias, impedance, and gain of the gain stage 420 and filter 430" to reduce power dissipation. *Id.* at 7:8–11.

2. *Challenged Claims*

Claims 1, 3, 4, and 8 of the '825 patent are challenged, of which claims 1, 3, and 8 are independent. Illustrative claim 1 follows, with emphasis added identifying a disputed limitation:

> 1. A method for power dissipation reduction in a receiver of a wireless transceiver of a battery powered portable wireless device, and a corresponding increase in battery life of the battery powered portable wireless device, the method comprising:
>
> *receiving a wireless signal having a desired signal and an interferer signal, by the wireless transceiver of the battery powered portable wireless device*, the wireless transceiver having a receiver signal path comprising a plurality of circuits, wherein the plurality of circuits includes an amplifier, a filter, and a mixer, and *wherein the wireless transceiver comprises a circuit for determining a signal strength of the interferer signal and a circuit for determining a signal strength of the desired signal*;
>
> wherein a worst-case power dissipation condition results when the signal strength of the desired signal is low and the signal strength of the interferer signal is high; and
>
> wherein the power dissipation reduction in the receiver is achieved by causing a bias current to vary in one or more of the plurality of circuits in the receiver signal path of the wireless transceiver as the signal strength of the interferer signal and the signal strength of the desired signal vary according to the following:
>
> (i) when the signal strength of the interferer signal is high and the signal strength of the desired signal is low, and the desired signal is larger than in the worst-case power dissipation condition, causing the bias current of the one or more of the plurality of circuits in the receiver signal path of the wireless transceiver to be reduced compared to the worst-case power dissipation condition, thereby saving power; and
>
> (ii) when the signal strength of the interferer signal is weak and the signal strength of the desired signal is weak, causing the

> bias current of the one or more of the plurality of circuits in the receiver signal path of the wireless transceiver to be decreased compared to the worst-case power dissipation condition, thereby saving power.

Ex. 1001, 12:60–13:31 (emphases added).

E. Prior Art and Other Evidence

Petitioner relies upon the references:

Name	Patent Document	Exhibit
Rauhala	EP 0 999 649 A2 (May 10, 2000)	1004
Masaaki	JP H8-228118 (Sept. 3, 1996)	1005

Pet. 3. Petitioner asserts Rauhala and Masaaki are prior art under pre-AIA 35 U.S.C. § 102(b). Pet. 4.

Petitioner relies on declaration testimony of R. Jacob Baker, P.E., Ph.D. in support of its Petition (Ex. 1002) and its Reply to Patent Owner's Response (Ex. 1019). Patent Owner relies on declaration testimony of Lawrence Larson, Ph.D. (Ex. 2015). Additionally, the parties have made of record deposition transcripts of Dr. Baker (Ex. 2016) and Dr. Larson (Ex. 1018).

F. Instituted Grounds of Unpatentability

We instituted trial on the following grounds asserted by Petitioner:

Claim(s) Challenged	35 U.S.C. §[1]	Reference/Basis
1, 3, 8	102(b)	Rauhala

[1] The Leahy-Smith America Invents Act, Pub. L. No. 112-29, 125 Stat. 284 (2011) ("AIA"), amending 35 U.S.C. §§ 102 and 103, was effective on March 16, 2013. The '825 patent claims the filing benefit of a patent that issued from an application filed on May 20, 2010, which is before the effective date of the applicable AIA amendment. Ex. 1001, code (63), 1:7–15. We, therefore, apply the pre-AIA versions of §§ 102 and 103 for purposes of this proceeding.

Claim(s) Challenged	35 U.S.C. §[1]	Reference/Basis
4	103(a)	Rauhala and Masaaki

Dec. 7, 41.

II. ANALYSIS

A. Legal Standards Concerning Demonstrating Unpatentability

To prevail in challenging the patent claims, Petitioner must demonstrate by a preponderance of the evidence that the claims are unpatentable. 35 U.S.C. § 316(e) (2012); 37 C.F.R. § 42.1(d) (2017). "In an [*inter partes* review], the petitioner has the burden from the onset to show with particularity why the patent it challenges is unpatentable." *Harmonic Inc. v. Avid Tech., Inc.*, 815 F.3d 1356, 1363 (Fed. Cir. 2016) (citing 35 U.S.C. § 312(a)(3) (requiring *inter partes* review petitions to identify "with particularity . . . the evidence that supports the grounds for the challenge to each claim")); *see also* 37 C.F.R. § 42.104(b) (requiring a petition for *inter partes* review to identify how the challenged claim is to be construed and where each element of the claim is found in the prior art patents or printed publications relied on). This burden never shifts to Patent Owner except in limited circumstances not present here. *See Dynamic Drinkware, LLC v. Nat'l Graphics, Inc.*, 800 F.3d 1375, 1378 (Fed. Cir. 2015) (citing *Tech. Licensing Corp. v. Videotek, Inc.*, 545 F.3d 1316, 1326–27 (Fed. Cir. 2008)) (discussing the burden of proof in *inter partes* review).

Petitioner asserts that certain claims of the challenge patent are unpatentable under 35 U.S.C. § 102(b). As relevant here, a claim is anticipated if a single prior art reference discloses all the claimed limitations arranged or combined in the same way as in the claim." *HTC Corp. v. Cellular Commc'ns Equip., LLC*, 877 F.3d 1361, 1368 (Fed. Cir. 2017); *see*

also 35 U.S.C. § 102. Although the elements must be arranged or combined in the same way as in the claim, "the reference need not satisfy an *ipsissimis verbis* test," i.e., identity of terminology is not required. *In re Gleave*, 560 F.3d 1331, 1334 (Fed. Cir. 2009); *accord In re Bond*, 910 F.2d 831, 832 (Fed. Cir. 1990). Additionally, an anticipatory reference can disclose each limitation of the claimed invention either expressly or inherently. *Eli Lilly & Co. v. Los Angeles Biomedical Rsch. Inst. At Harbor-UCLA Med. Ctr.*, 849 F.3d 1073, 1074 (Fed. Cir. 2017). Furthermore, a reference can anticipate "without a particular disclosure of the specific combination recited in the disputed claims" if "that reference teaches that the disclosed components or functionalities may be combined and one of skill in the art would be able to implement the combination." *Blue Calypso, LLC v. Groupon, Inc.*, 815 F.3d 1331, 1344 (Fed. Cir. 2016) (discussing *Kennametal, Inc. v. Ingersoll Cutting Tool Co.*, 780 F.3d 1376, 1379–81 (Fed. Cir. 2015)).

Petitioner asserts that a claim of the challenged patent is unpatentable under 35 U.S.C. § 103(a). A claim is unpatentable under 35 U.S.C. § 103(a) if the differences between the claimed subject matter and the prior art are such that the subject matter, as a whole, would have been obvious at the time of the invention to a person having ordinary skill in the art. *KSR Int'l Co. v. Teleflex, Inc.*, 550 U.S. 398, 406 (2007). The question of obviousness is resolved on the basis of underlying factual determinations including (1) the scope and content of the prior art; (2) any differences between the claimed subject matter and the prior art; (3) the level of ordinary skill in the art; and

(4) when in evidence, objective evidence of nonobviousness.[2] *Graham v. John Deere Co.*, 383 U.S. 1, 17–18 (1966).

B. Level of Ordinary Skill in the Art

We review the grounds of unpatentability in view of the understanding of a person of ordinary skill in the art at the time of the invention ("POSITA"). In determining the level of ordinary skill in the art, various factors may be considered, including the "type of problems encountered in the art; prior art solutions to those problems; rapidity with which innovations are made; sophistication of the technology; and educational level of active workers in the field." *In re GPAC, Inc.*, 57 F.3d 1573, 1579 (Fed. Cir. 1995) (quotation marks omitted).

Relying on declaration testimony from Dr. Baker, Petitioner asserts that a person of ordinary skill in the art "would have had a bachelor's degree in electrical engineering, electronics engineering, or the equivalent, and two or more years of experience in electronic circuits and mobile communication devices including transceivers." Pet. 4 (citing Ex. 1002 ¶¶ 27–31). Petitioner also indicates that "[m]ore practical experience could qualify one not having the aforementioned education as a POSITA, while a higher level of education could offset lesser experience." *Id.*

Relying on declaration testimony from Dr. Larson, Patent Owner asserts, as Patent Owner did in its Preliminary Response, that a person of ordinary skill "would have had at least a Bachelor's Degree in Electrical or Electronics Engineering, along with approximately five years of relevant experience in the design of transceiver architecture, RF systems and

[2] Patent Owner has not offered objective evidence of non-obviousness. *See generally* PO Resp.; PO Sur-reply.

components, and analog and mixed signal circuits, as well as experience in control algorithms for such system and familiarity with wireless standards—with additional education substituting for experience and vice versa." PO Resp. 24–25 (citing Ex. 2015 ¶ 48); *see* Prelim. Resp. 24 (citing Ex. 2005 ¶ 48); Dec. 9. Dr. Larson indicates that his opinions would not change if Petitioner's proposed level of ordinary skill were applied. Ex. 2015 ¶ 51.

As we noted in the Institution Decision, the two proposals are materially similar in the educational requirement but differ in professional experience required. Dec. 9; *compare* Pet. 4 *with* PO Resp. 24–25. In the Institution Decision, we determined that Petitioner's proposal of certain education plus a minimum of two years of experience was a better reflection of the level of skill in the prior art. Dec. 9–10. We also determined that Petitioner's proposal was consistent with the problems and solutions in the '825 patent and prior art of record. Dec. 9–10. Accordingly, we adopted Petitioner's definition of the level of ordinary skill for purposes of determining whether to institute an *inter partes* review. Dec. 10.

Following institution, Patent Owner maintained the same level of ordinary skill proposed in its preliminary response and did not address our discussion of the level of ordinary skill in the art in the Institution Decision. PO Resp. 24–25; *see also* Prelim. Resp. 24. For the reasons discussed in the Institution Decision, we adopt and apply for this Decision the level of ordinary skill articulated by Petitioner and used previously in our Institution Decision. *See* Dec. 8–10. In light of our review of the complete record, we find that this formulation is consistent with the '825 patent, the prior art of record, and is supported by the testimony of Dr. Baker. *See* Ex. 1002 ¶¶ 27–

31. Our decision would not change, however, if we had applied Patent Owner's proposed level of ordinary skill.

C. Claim Construction

In an *inter partes* review, the Board construes a claim using the same claim construction standard employed in a civil action under 35 U.S.C. § 282(b). 37 C.F.R. § 42.100(b) (2020). Under this standard, the "words of a claim 'are generally given their ordinary and customary meaning,'" as would have been understood by a person of ordinary skill in the art in question at the time of the invention. *Phillips v. AWH Corp.*, 415 F.3d 1303, 1312 (Fed. Cir. 2005) (en banc) (quoting *Vitronics Corp. v. Conceptronic, Inc.*, 90 F.3d 1576, 1582 (Fed. Cir. 1996)). "In determining the meaning of the disputed claim limitation, we look principally to the intrinsic evidence of record, examining the claim language itself, the written description, and the prosecution history, if in evidence." *DePuy Spine, Inc. v. Medtronic Sofamor Danek, Inc.*, 469 F.3d 1005, 1014 (Fed. Cir. 2006) (citing *Phillips*, 415 F.3d at 1312–17).

Additionally, we construe claim terms only as relevant to the parties' contentions and only to the extent necessary to resolve the controversy. *Realtime Data, LLC v. Iancu*, 912 F.3d 1368, 1375 (Fed. Cir. 2019) ("The Board is required to construe 'only those terms . . . that are in controversy, and only to the extent necessary to resolve the controversy.'" (quoting *Vivid Techs., Inc. v. Am. Sci. & Eng'g, Inc.*, 200 F.3d 795, 803 (Fed. Cir. 1999))).

1. The Circuit Limitations

In the Institution Decision, we analyzed the claim scope of "the wireless transceiver comprises a circuit for determining a signal strength of the interferer signal and a circuit for determining a signal strength of the

desired signal challenged independent claims," which each challenged independent claim recites. *See* Ex. 1001, 13:4–7 (claim 1), 13:49–52 (claim 3), 16:21–24 (claim 8). Dec. 11–17. Based on the claim language, the written description, and prosecution history, we interpreted "wherein the wireless transceiver comprises a circuit for determining a signal strength of the interferer signal and a circuit for determining a signal strength of the desired signal" as encompassing, but not requiring, the same circuit determining a signal strength of the interferer signal and determining a signal strength of the desired signal. Dec. 10–17.

After institution, both parties agreed with our interpretation. Patent Owner, in its Patent Owner Response, agreed that the challenged claims "are not limited to a particular number of circuits or exact timing of their use."[3] PO Resp. 32. Petitioner also agreed with the claim construction set forth in our Institution Decision. Pet. Reply 5.

Having considered whether the construction set forth in the Institution Decision should be changed in light of evidence introduced during trial, we are not persuaded any modification is necessary. Therefore, we maintain the interpretation of "wherein the wireless transceiver comprises a circuit for

[3] To be sure, Patent Owner contends that the prior art does not disclose the determining as required by the challenged claims, particularly in light of the limitation "receiving a wireless signal having a desired signal and an interferer signal." *See, e.g.,* PO Resp. 35 ("Petitioners failed to show that *Rauhala* discloses 'a circuit for determining a signal strength of the interferer signal and a circuit for determining a signal strength of the desired signal.'"); PO Sur-reply 13 ("There is simply no teaching or suggestion in *Rauhala* of the elements requiring 'receiving a wireless signal having a desired signal and an interferer signal,' and then 'determining a signal strength of the interferer signal and . . . determining a signal strength of the desired signal' within that received wireless signal.").

determining a signal strength of the interferer signal and a circuit for determining a signal strength of the desired signal" found in our Institution Decision as "encompassing, but not requiring, the same circuit determining a signal strength of the interferer signal and determining a signal strength of the desired signal." Dec. 17.

2. Other Claim Terms

In addition, we discuss claim interpretation to the extent it is necessary in the context of analyzing the asserted grounds.

D. Summary of Prior Art Disclosures

1. Disclosure of Rauhala (Ex. 1004)

Rauhala discloses "a method and an arrangement for linearizing a radio receiver" that can be "applied in the reception circuits of mobile stations." Ex. 1004 ¶ 1. Rauhala explains that "[t]he quality of a signal in a radio receiver is degraded by noise and interference added to the signal on the transmission path, noise in the reception circuitry, as well as by indirectly caused by other radio signals" when a signal on a neighboring channel "is considerably stronger than the signal to be received." Ex. 1004 ¶ 2. Rauhala further indicates that "the signal quality can be improved by using more energy in the receiver" but notes that this "shortens the battery life." Ex. 1004 ¶ 3.

Rauhala summarizes the "basic idea of the invention" as a receiver monitoring the signal strength on the receive channel and neighboring channels and determining the quality of the detected signal. Ex. 1004 ¶ 6. "[W]hen the signal strength is satisfactory on the receive channel and ordinary on the neighboring channels, the supply currents of the receiver's

front-end amplifiers and at least the first mixer are kept relatively low." *Id.* "If the signal strength goes below a certain value on the receive channel or exceeds a certain value on the neighboring channel, said supply currents are increased." *Id.* Rauhala indicates that an "advantage of the invention is that the energy consumption of the receiver can be reduced without degrading the signal quality," which "means longer life for the battery." *Id.* ¶ 7.

Figure 1 of Rauhala, shown below, is "a simplified example of a radio receiver without the low-frequency components." *Id.* ¶ 12.

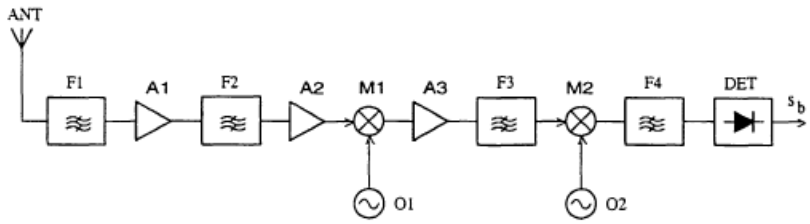

Fig. 1

The radio receiver depicted in Figure 1 includes antenna ANT coupled to a series of "linear units" of filters (F1–F4), amplifiers (A1–A3), and mixers (M1, M2), with each mixer connected to an oscillator (O1, O2). *Id.* As shown, the output of filter F4 is coupled to detector DET, which provides baseband signal s_b. *Id.*

Figure 4, below, is similar to Figure 1 and illustrates an example of supply current control for linear units.

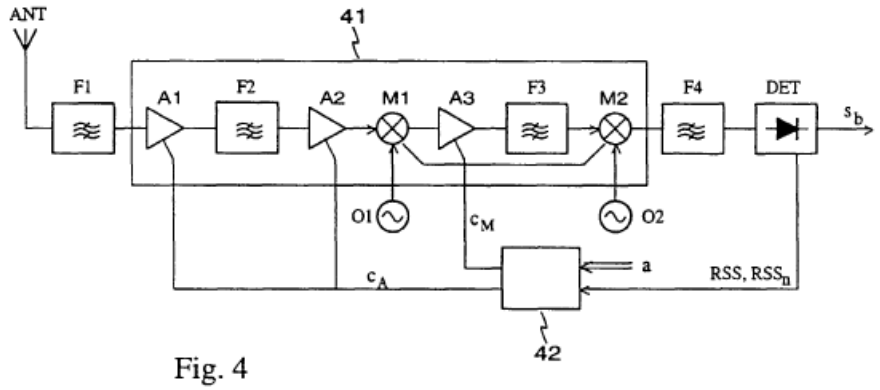

Fig. 4

Id. ¶ 17. In addition to the antenna, oscillators, detector DET, and linear units of filters, amplifiers, and mixers shown in Figure 1, Figure 4 includes control unit 42 that "receives from detector DET an indication about either the receive channel signal strength RSS or the strength of any signal on the reception band." *Id.* (emphasis added). RSS is the receive channel strength (as noted above) and RSS_n is the signal strength of the neighboring channel in which the signal strength is greater. *Id.* ¶ 17. Figure 4 also depicts another input to control unit 42—"signal a" that is received "from the receiver's tuner control [that] indicates the channel." *Id.* ¶ 17, Fig. 4.

"The control unit 42 provides two one-bit control signals c_A and c_M" to various linear units. *Id.* ¶ 17, Fig. 4. Control signal c_A is provided to amplifiers A1 and A2, whereas control signal c_M is provided to mixer M1, amplifier A3, and mixer M2. *Id.* ¶ 17. The control signals are used to control the supply current provided to the respective linear units. *Id.*

2. Disclosure of Masaaki (Ex. 1005)

Masaaki describes "an automatic gain control circuit which improves intermodulation characteristics of an amplification circuit used in a radio receiver such as a pager, and minimizes power consumption in the radio

receiver." Ex. 1005, code 57 ("Abstract"). Figure 1, shown below, "is a circuit block diagram of a reception unit 40 of a pager." *Id.* ¶ 20.

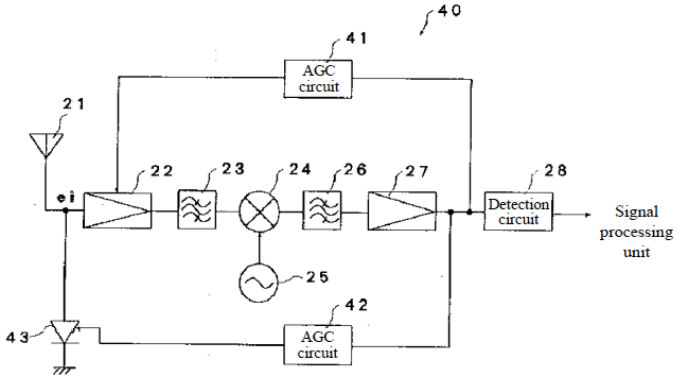

FIG. 1

As shown in Figure 1, reception unit 40 "is configured by an antenna 21, an RF amplifier[4] 22, a bandpass filter 23, a mixer 24, a local oscillator 25, a bandpass filter 26, an IF amplifier[5] 27, a detection circuit 28, a bias control AGC [automatic gain control] circuit 41, an input attenuation AGC circuit 42, and an attenuation diode 43." *Id.* ¶ 21.

E. Asserted Anticipation of Claims 1, 3, and 8 by Rauhala

Petitioner asserts that the three challenged independent claims—claims 1, 3, and 8—are anticipated by Rauhala. Pet. 20–49. Patent Owner contends that Rauhala fails to disclose each limitation recited in the independent claims. PO Resp. 33–59.

Upon consideration of Petitioner's arguments and supporting evidence and Patent Owner's arguments and supporting evidence, we are not persuaded that Petitioner has demonstrated by a preponderance of the

[4] A RF amplifier is a common abbreviation for a radio frequency amplifier.
[5] An IF amplifier is a common abbreviation for an intermediate frequency amplifier.

evidence that claims 1, 3, and 8 are anticipated by Rauhala for the reasons that follow.

1. Claim 1

Petitioner asserts that each limitation of claim 1 is disclosed by Rauhala and provides an element-by-element analysis. Pet. 20–30. Petitioner relies on Rauhala's disclosure of a radio receiver used in a mobile phone and techniques for reducing energy consumption without degrading signal quality that result in longer battery life. *See, e.g.,* Pet. 20–21 (citing Ex. 1004 ¶¶ 1, 6, 7, 12). Petitioner identifies amplifiers, mixers, and filters of the radio receiver shown in Rauhala's Figure 1 as the recited "the wireless transceiver having a receiver signal path comprising a plurality of circuits, wherein the plurality of circuits includes an amplifier, a filter, and a mixer." Pet. 22 (citing Ex. 1004 ¶¶ 12, 13–20, Fig. 1). For achieving a power dissipation reduction "by causing a bias current to vary in . . . circuits in the receiver signal path of the wireless transceiver as the signal strength of the interferer signal and the signal strength of the desired signal vary" in particular ways as enumerated in the claim, Petitioner identifies additional circuit components implemented on the receiver configuration in Figure 1 that are used to adjust currents to these signal path components based on signal conditions. Pet. 22–23, 25–30. Specifically, Petitioner identifies controller 42 in Rauhala's Figure 4 and Rauhala's table in paragraph 17 that specifies how "the linear unit supply currents are controlled" based on outputs from controller 42. Pet. 24 (quoting Ex. 1004 ¶ 17); *see* Pet 24 (identifying a particular table row as disclosing the "worst-case power dissipation condition"); Pet. 27–30 (identifying rows in table for various limitations).

Petitioner also indicates that "*Rauhala* discloses a 'detector DET' configured to provide "an indication about either the receive channel signal strength RSS or the strength of any signal on the reception band, which may include 'RSS_n [that] stands for the signal strength of the neighboring channel.'" Pet. 21 (quoting Ex. 1004 ¶ 17) (alteration in original). As discussed previously, the scope of claim 1 encompasses, but does not require, the same circuit determining both a signal strength of the interferer signal and a signal strength of the desired signal. As such, Petitioner's identifying both recited circuits as Rauhala's detector DET is not itself problematic.

a. The Parties' Dispute

The dispositive issue is whether Rauhala discloses, either expressly or inherently, "receiving a wireless signal having a desired signal and an interferer signal, by the wireless transceiver . . . wherein the wireless transceiver comprises a circuit for determining a signal strength of the interferer signal and a circuit for determining a signal strength of the desired signal" (hereinafter, "the disputed limitation"), as arranged or combined in the same way as recited in claim 1.

(i) Dispute regarding receiving the desired signal and the interferer signal at the same time

Patent Owner contends, based on the plain language of the claim as well as the specification description, that claim 1 requires the desired signal and the interferer signal to be received at the same time. *See, e.g.,* PO Sur-reply 8 ("Simply from reading the claim language, it is clear that the desired signal and the interferer signal are ***parts of the same received wireless signal***—in other words, they are received together."); PO Resp. 35 ("The

'825 Patent teaches that the desired signal and the interferer signal are part of the same signal input spectrum—in other words, they are received together." (citing Ex. 1001, 5:20–30; 13:4–7 (claim 1))).

In Reply, Petitioner contends that the "determining" limitations do not recite "a temporal requirement." Pet. Reply 6. We agree that the "determining" limitations in isolation do not recite a temporal requirement. Patent Owner's argument in its Response, however, additionally focuses on the "receiving" limitation.[6] PO Resp. 35. Petitioner does not address directly in its Reply the temporal effect of the claim requirement that the desired signal and the interferer signal are parts of the same received wireless signal. *See, e.g.,* Pet. Reply 6–9.

We agree with Patent Owner that the desired signal and interferer signal must be received at the same time. The plain language of the claim requires the wireless transceiver to "receiv[e] a wireless signal having a desired signal and an interferer signal," the determining of a signal strength of the interferer signal and the determining of a signal strength of the desired signal must be performed at the same time; otherwise, the determinations of signal strengths would not be of the same wireless signal. The specification supports this understanding. "When a receiver is actively receiving a desired signal, each block in the signal path has at its input the desired signal as well as noise and possibly interfering signals." Ex. 1001, 5:20–22; *see also id.* at 5:31–33 ("FIGS. 2A and 2B illustrate examples of desired signals, interferers, and noise that may be received by one of the various circuits in a

[6] The Institution Decision did not address whether the receiving limitation required the determining of the signal strength of the interferer signal and the determining of the signal strength of the desired signal to be performed at the same time. *See* Inst. Dec. 11–17.

wireless receiver."), Figs. 2A, 2B. "The desired signal is the useful, information-carrying portion of a received signal." *Id.* at 5:22–24.

Additionally, as Patent Owner indicates, Dr. Baker's testimony supports that determining the signal strength of two parts of the same received wireless signal requires the determining be performed at the same time. Ex. 2016, 65:7–17[7]; *see* PO Resp. 35 (citing Ex. 2016, 64:10–22, 65:7–17); PO Sur-reply 9 (contending Petitioner's "expert agreed that in order for an interferer signal to interfere, it must be received along with the desired signal" (citing Ex. 2016, 64:10–22, 65:7–17[8])).

Petitioner contends that Patent Owner's argument "invites the Board to read" temporal requirements into the claim. Pet. Reply 6. We disagree because Patent Owner's arguments rely on the plain language of the claim, supporting description in the specification, and Dr. Baker's testimony.

Accordingly, for these reasons, we determine that claim 1 requires the desired signal and the interferer signal to be received at the same time.

(ii) Dispute regarding Rauhala disclosure

For the disputed limitation, Petitioner notes in its Petition that Rauhala's receiver "monitors the signal strength on the receive channel and the neighboring channels." Pet. 21 (quoting Ex. 1004 ¶ 6); Pet. 23 (quoting Ex. 1004 ¶ 6). Petitioner contends that Rauhala's receive channel discloses

[7] "Q. Do the interferers have to be present at the same time as the desired signal in order to interfere with the desired signal?. . . [A.] I think I've answered that already. But just to keep it short and incorporate my previous answers, yes. There has to be — if the interferers are present, they can interfere at the same time with the desired signal."
[8] Patent Owner mistakenly cites to Ex. 2017, which we find to be harmless error.

the recited "desired signal"; Rauhala's neighboring channel signal discloses the recited "interferer signal"; and "these signals are received" at Rauhala's radio receiver. Pet. 21 (citing Ex. 1004 ¶¶ 6, 17, 1, 7; Ex. 1002 ¶¶ 78–80, 83).

Petitioner relies on Rauhala's detector DET in Figure 4 and related disclosures in paragraph 17 for both the recited "a circuit for determining a signal strength of the interferer signal" and the recited "a circuit for determining a signal strength of the desired signal." Pet. 13–14, 23. As Petitioner indicates, quoting Rauhala: "the receiver includes a control unit (e.g., control unit 42) that 'receives . . . an indication about either the receive channel signal strength RSS or the strength of any signal on the reception band' and, based on the strengths of the receive channel signal and the neighboring channel signal, 'provides two one-bit control signals C_A and C_M' to the amplifiers and mixers in the receiver" to control the level of current to be supplied. Pet. 13; *see* Pet. 21 (indicating "*Rauhala* discloses the recited 'desired signal' as the receive channel signal and the recited 'interferer signal' as the neighboring channel signal"), 23 (indicating Rauhala's detector DET corresponds to both recited circuits).

Petitioner does not explain in its Petition more particularly how Rauhala's detector DET in Figure 4, which provides *either* the receive channel signal strength *or* the neighboring channel signal strength, is arranged or combined as in the claim that requires the desired signal and the interferer signal to be parts of the same received wireless signal, and as such, to be received together at the same time. *See* Pet. 13–16, 21, 23. Specifically, Petitioner acknowledges that "*Rauhala* discloses *a* 'detector DET' configured to provide" *either* the receive channel signal strength *or*

the neighboring channel signal strength. Pet. 21 (emphasis added); *see also* Pet. 23 (quoting same). As such, Petitioner indicates in its Reply that Rauhala discloses a single detector DET and does not argue expressly that Rauhala discloses multiple detectors. Petitioner's counsel at the hearing acknowledged that the Petitioner did not specifically argue in the Petition that Rauhala's detector receives the received channel signal strength and the neighboring channel signal strength at the same time. Tr. 16:22–17:11.

In response to the Petition, Patent Owner contends that Petitioner has failed to show Rauhala anticipates the circuit limitations. PO Resp. 1, 2–4, 33–34, 35–45; PO Sur-reply 1, 8–14. Patent Owner argues that Rauhala's detector does not detect an interferer signal strength of the received wireless signal, as required by the claim. *See, e.g.,* PO Resp. 3 ("*Rauhala* nowhere discloses or suggests 'determining' 'the interferer signal' component of a received signal spectrum."); PO Sur-reply 1 ("*Rauhala's* detector does not detect an interferer signal strength of a received wireless signal, when it is re-tuned to detect total received signal strength of a different wireless signal."). Rather, according to Patent Owner, Rauhala's detector "detects received signal strength of a different wireless channel." PO Sur-reply 1; *see* PO Resp. 3 ("Measuring the total signal strength when tuned to channel B is not the same as measuring the interference contribution of channel B on channel A when tuned to channel A.").

Patent Owner correctly notes that Rauhala expressly describes detector DET as providing *either* the receive channel signal strength RSS *or* the strength of any signal on the reception band, including (as shown in Figure 4) the signal strength RSS_n of the neighboring channel. PO Resp. 37 (quoting Ex. 1004 ¶ 17; citing Pet. 13). As such, according to Patent Owner,

detector DET "can at most give one indication" of the receive channel signal strength RSS or the neighboring channel signal strength RSS_n depending on the channel to which the receiver is tuned. PO Resp. 37 (citing Ex. 1004 ¶¶ 17, 13, Fig. 4; Ex. 2015 ¶¶ 70–72). According to Patent Owner, Rauhala's detector DET makes sequential determinations of signal strength of the receive channel signal and signal strength of the neighboring channel, which means the determination of signal strength after being tuned to the neighboring channel is of "a different signal spectrum" and not as arranged or combined in claim 1. PO Resp. 38.

In Reply, Petitioner contends that "*Rauhala* unmistakably describes supply current control signals that vary based on simultaneous determinations of RSS and RSS_n." Pet. Reply 8. For support, Petitioner quotes Rauhala's description of control unit 42 providing one control signal "when signal RSS is greater than [a threshold value] S4 and signal RSS_n is at the ***same time*** smaller than [another threshold value] Sn" and another similar example. Pet. Reply 8–9 (quoting Ex. 1004 ¶ 17). From this description, Petitioner contends a "POSITA therefore would have understood that detector DET must simultaneously determine a desired signal strength (RSS) and [a neighboring channel signal strength] (RSS_n)." Pet. Reply 8–9 (citing Ex. 1004 ¶ 17; Ex. 1019 ¶¶ 47–49). Petitioner further contends that "a POSITA would have recognized that the consideration of signal strength detected at the same time would be essential to the proper functioning of *Rauhala*'s receiver." Ex. 1019 ¶ 48; Pet. Reply 9 (citing Ex. 1019 ¶¶ 47–49). Petitioner also disputes that Rauhala's detector DET requires "'re-tuning' after determining the desired signal strength (RSS) but before

determining the [neighboring channel] signal strength (RSS_n)." Pet. Reply 8 (citing PO Resp. 36–38; Ex. 2015 ¶¶ 70, 72; Ex. 1019 ¶¶ 46–51).

In its Sur-reply, Patent Owner maintains its position that Rauhala does not disclose measuring the signal strength of two parts of the same received wireless signal—the desired signal and the interferer signal—that are received together, as arranged or combined in the claim. PO Sur-reply 8. Rather, according to Patent Owner, Rauhala discloses a different approach to monitoring signal strength of the receive channel and neighboring channels that involves the measurement of different wireless signals. PO Sur-reply 8.

b. Rauhala's Disclosure in Paragraph 17 and Figure 4

We turn first to whether Rauhala discloses in Figure 4 or paragraph 17 determining a signal strength of the interferer signal and a circuit for determining a signal strength of the desired signal as arranged or combined in the claim that requires the desired signal and the interferer signal to be parts of the same received wireless signal, and as such, to be received together and signal strength determined at the same time.

Rauhala describes a detector DET that provides an indication to control unit 42 of either the signal strength of the receive channel or the signal strength of the neighboring channel, but does not describe providing simultaneous determinations of the receive channel signal strength and the neighboring channel signal strength, as Petitioner contends in its Reply. *See* Pet. Reply 8–9. Rauhala in paragraph 17 states in pertinent part:

> Fig. 4 relates to a second example of supply current control for the linear units. A control unit 42 receives from detector DET about *either* the receive channel signal strength RSS *or* the strength of any signal on the reception band. Signal a from the receiver's tuner control indicates the channel. Signal RSS has one threshold value S4 which corresponds to a relatively low

> signal strength. Signal RSS_n also has one threshold value Sn, which corresponds to a relatively high signal strength on the channel. The control until 42 provides two one-bit control signals c_A and c_M. Signal c_A is 0 when signal RSS is greater than S4 and signal RSS_n is *at the same time* smaller than Sn. Otherwise, signal c_A is 1. . . . Signal c_M is 1 when signal RSS is not greater than S4 and signal RSS_n is *at the same time* at least Sn. Otherwise, signal c_M is 0.

Ex. 1004 ¶ 17 (emphases added); *see, e.g.,* Pet. 21, 23; Pet. Reply 7–9.

In paragraph 17, Rauhala expressly states that the control unit in the Figure 4 example receives one type of indication from detector DET at a time—either an indication of the signal strength of the receive channel or an indication of the signal strength of another channel. In other words, detector DET provides an indication of the signal strength of one or the other channel, but not both. The following sentence in Rauhala then explains that a signal (namely, "[s]ignal a") is provided to control unit 42 from the receiver's tuner control to indicate the channel to which the signal strength indication applies.

We next turn to Rauhala's Figure 4, which appears below.

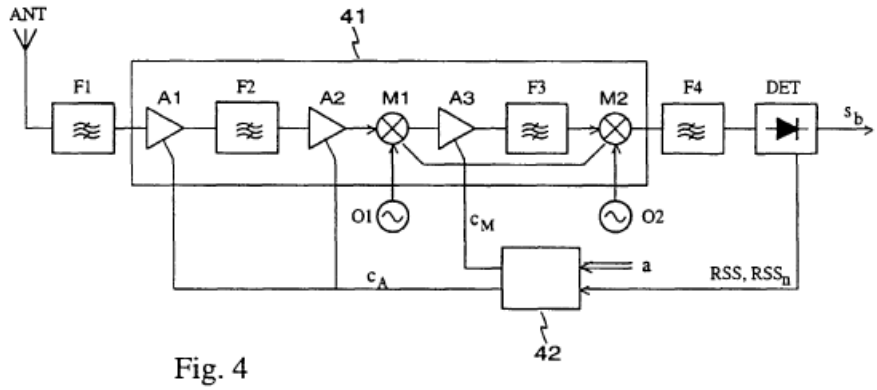

Fig. 4

Figure 4 shows a rectangle labeled "DET" that includes "the common and well-known diode symbol" ⊣▶⊢ used in circuit figures, according to

Dr. Larson.[9] Ex. 2015 ¶ 60; *see* PO Resp. 36 (discussing Ex. 2015 ¶ 60). To be clear, we do not credit Dr. Larson's speculation that a particular type of diode—"I would *assume* that the detector is a simple type of envelope detector known as a 'diode detector'"—is used in Rauhala's receiver. Ex. 2015 ¶ 60 (emphasis added). Dr. Larson's testimony in this regard is insufficiently supported. Ex. 1004, Fig. 4; Ex. 2015 ¶ 60; *see also* 37 C.F.R. 42.65(a) ("Expert testimony that does not disclose the underlying facts or data on which the opinion is based is entitled to little or no weight."); *see also Xerox Corp. v. Bytemark, Inc.*, No. IPR2022-00624, 2022 WL 3648989, at *6 (PTAB 2022) (precedential) (Director affirming because "the cited declaration testimony is conclusory and unsupported, adds little to the conclusory assertion for which it is offered to support, and is entitled to little weight."); *see also* Ex. 1019 ¶ 45 (Dr. Baker disagreeing with Dr. Larson's assertion that Rauhala's detector DET is a diode detector).

Dr. Baker and Dr. Larson agree, as do we, that Rauhala does not describe how detector DET operates to generate the receive channel signal strength (RSS) and a neighboring channel signal strength (RSS_n). *See* Ex. 1004 ¶ 17; Ex. 1019 ¶ 45 (Dr. Baker testifying, "[a]lthough *Rauhala* discloses that the detector detects both a receive channel signal strength (RSS) and a neighboring channel signal strength (RSS_n), and how these indications are used to generate a corresponding control signal to increase or decrease currents supplied to the linear units, *Rauhala* does not specify the

[9] Although Dr. Baker disagrees with the particular type of diode hypothesized by Dr. Larson, Dr. Baker does not contest that the symbol used for detector DET in Figure 4 is a diode symbol. Ex. 1019 ¶ 46 (acknowledging the symbol is "a symbol of a diode"); *see* Pet. Reply 7–8 (citing Ex. 1019 ¶¶ 46–47).

type of detector or the components constituting the detector."); Ex. 2015 ¶ 60 (Dr. Larson testifying, "Rauhulu does not give any details about the internal functioning of the detector."). Even so, this does not bolster Petitioner's position because the salient issue is whether Rauhala discloses a detector that provides the signal strength of the receive channel and the neighboring channel to meet the claim requirements, not the structure of Rauhala's detector DET.

Figure 4 identifies as an input to control unit 42 the two types of indications of channel signal strength described in paragraph 17—either "RSS" identifying "the receive channel signal strength" or "RSS_n" that "stands for the signal strength of the neighboring channel in which the signal strength is greater." Ex. 1004, ¶ 17. Although the control unit 42 input label shown on Figure 4 uses a comma to separate the two types of indications ("RSS, RSS_n"), the text in paragraph 17 describing the input is unambiguous—"[a] control unit 42 receives from detector DET about either the receive channel signal strength RSS or the strength of any signal on the reception band."[10] Ex. 1004, ¶ 17, Fig. 4. Figure 4 further shows control unit 42 as receiving "signal a" as input, which paragraph 17 describes as indicating the channel to which "the receiver's tuner control is tuned." Ex. 1004 ¶ 17.

Petitioner and Dr. Baker disagree that Rauhala's discloses in paragraph 17 and Figure 4 providing one or the other signal strength but not both, and, in Reply, point to the portion of paragraph 17 that describes

[10] Dr. Baker cites to this input line in Rauhala's Figure 4. Ex. 1019 ¶¶ 46–47. Petitioner's counsel at the hearing, however, acknowledged that in Figure 4 "[t]he same line, by itself doesn't necessarily tell you about the timing." Tr. 14:23–15:2.

control unit 42 providing two one-bit control signals based on a comparison of signal strengths to thresholds. Petitioner and Dr. Baker rely on the "at the same time" statements to conclude that Rauhala discloses "that detector DET must simultaneously determine a desired signal strength (RSS) and [neighboring channel signal strength] (RSS_n)." Pet. Reply 9 (quoting Ex. 1004 ¶ 17; citing Ex. 1019 ¶¶ 47–49); Ex. 1019 ¶ 47 ("In generating the control signals, the control unit 42 considers signal strength of the two signals that are measured "at the same time.") (citing Ex. 1004 ¶ 17[11]).

Patent Owner contends that Rauhala describes meeting the two conditions "at the same time" to determine how control unit 42 is to set control signals, which does not require that the determination of RSS and RSS_n happen simultaneously. PO Sur-reply 13.

We agree with Patent Owner that Rauhala does not state that the signal strengths are measured simultaneously or at the same time. Indeed, as discussed above, Rauhala indicates unequivocally in the same paragraph the opposite—that detector DET provides to control unit 42 "an indication about either the receive channel signal strength RSS or the strength of any signal on the reception band." Ex. 1004 ¶ 17. Rauhala describes that "control unit 42 provides two one-bit control signals c_A and c_M" based on indications received from detector DET. *Id.* Importantly, Rauhala indicates that "at the same time as" describes how the control unit 42 uses the received inputs RSS and RSS_n shown in Figure 4, which are described earlier in paragraph 17 as indications of either RSS or RSS_n from detector DET. *Id.* ("Signal c_A is 0 when signal RSS is greater than S4 and signal RSS_n is at the

[11] Dr. Baker's reply declaration correctly quotes Rauhala paragraph 17 but cites to paragraph 18. We deem this harmless error.

same time smaller than Sn. . . . Signal c_M is 1 when signal RSS is not greater than S4 and signal RSS_n is at the same time at least Sn. Otherwise, signal c_M is 0.”).

The burden remains on Petitioner to demonstrate by a preponderance of the evidence that Rauhala discloses the disputed limitations as arranged or combined in the claim. Petitioner does not persuasively reconcile these “either/or” statements regarding the functioning of detector DET with the “at the same time as” statements regarding control signals output by control unit 42 in paragraph 17. We do not find persuasive Petitioner counsel’s position expressed at the hearing that Rauhala’s “either/or” statements are “simply an imprecise description” (Tr. 16:22–24). We do not see a lack of precision in Rauhala’s “either/or” statements.

When asked at his deposition to explain Rauhala’s use of the word “or” regarding the functioning of detector DET, Dr. Baker asserted that “[detectors] can be designed to determine RSS or RSS_n.” Ex. 2016, 85:5–12. We find Dr. Baker’s testimony that “it’s reasonable that if you can design . . . the detector to detect one or the other, you can also design it to detect both” to be without factual support. *Id.* at 85:13–16. He points to no textbook or other independent evidence to support that would have led one of ordinary skill to design such a detector or to support that one of ordinary skill would have understood Rauhala’s detector to be so designed. Furthermore, Dr. Baker recognizes that “Rauhala doesn’t teach the details of what’s in the detector.” *Id.* at 91:6–7.

We give little weight to Dr. Baker’s unsupported testimony that one could design a detector to detect both RSS and RSS_n from the same wireless signal. *See* 37 C.F.R. 42.65(a) (“Expert testimony that does not disclose the

underlying facts or data on which the opinion is based is entitled to little or no weight."); *see also Xerox Corp. v. Bytemark, Inc.*, No. IPR2022-00624, 2022 WL 3648989, at *6 (PTAB 2022) (precedential) (Director affirming because "the cited declaration testimony is conclusory and unsupported, adds little to the conclusory assertion for which it is offered to support, and is entitled to little weight").

Accordingly, Petitioner has not met its burden of demonstrating that Rauhala discloses in paragraph 17 and Figure 4 receiving a wireless signal having a desired signal and an interferer signal, by the wireless transceiver . . . wherein the wireless transceiver comprises a circuit for determining a signal strength of the interferer signal and a circuit for determining a signal strength of the desired signal," as arranged or combined in the same way as recited in claim 1.

c. Rauhala's Monitoring Signal Strengths

For "receiving a wireless signal having a desired signal and an interferer signal," Petitioner relies in its Petition on Rauhala's disclosure that the basic idea of the invention is a receiver that "monitors the signal strength on the receive channel and neighboring channels." Pet. 21 (quoting Ex. 1004 ¶ 6). Petitioner also notes more generally that Rauhala's express advantage of the invention is "the energy consumption of the receiver can be reduced without degrading the signal quality," which "means longer battery life." Pet. 20–21 (citing Ex. 1004 ¶¶ 1, 6, 7). Petitioner, in reply to Patent Owner's arguments, again points to Rauhala paragraph six indicating that Rauhala monitors the signal strength on the receive channel *and* neighboring channels, and accordingly adjusts the supply currents to solve the problem of signal quality degraded by noise and interference caused by other radio

signals. PO Resp. 8 (citing Ex. 1004 ¶ 6). Petitioner contends that these disclosures support its position that one of ordinary skill "would have understood that Rauhala's detector DET must simultaneously determine a desired signal strength (RSS) and [signal strength of the neighboring channel] (RSS_n)." Pet. Reply 8–9 (citing Ex. 1019 ¶¶ 47–49).

Rauhala describes in paragraph six that "the basic idea of the invention" is a receiver that "monitors the signal strength on the receive channel and neighboring channel," as Petitioner points out. Ex. 1004 ¶ 6; *see* Pet. Reply 9; Pet. 20-21 (citing Ex. 1004 ¶¶ 6, 7), Pet. 23 (quoting Ex. 1004 ¶ 6). But Rauhala then describes a particular manner of using the monitored signal strengths:

> In normal conditions, i.e., when the signal strength is satisfactory on the receive channel and ordinary on the neighboring channels, the supply currents . . . are kept relatively low. If the signal strength goes below a certain value on the receive channel or exceeds a certain value on a neighboring channel, said supply currents are increased."

Ex. 1004 ¶ 6; *see* Pet. 20-21 (citing Ex. 1004 ¶¶ 6, 7), Pet. 23 (quoting Ex. 1004 ¶ 6).

None of these statements indicates measuring the signal strength of the receive channel and the signal strength of the neighboring channel at the same time, as required by the claim 1. Rauhala discloses increasing supply currents under two different conditions—(1) if the signal strength on the receive channel "goes below a certain value" or (2) if the signal strength on the neighboring channel "exceeds a certain value." This does not describe or otherwise support Petitioner's contention that Rauhala's "monitoring" measures the signal strengths of the receive channel and neighboring channel at the same time. As such, Rauhala's statements concerning a

receiver that "monitors the signal strength on the receive channel and neighboring channel" do not rise to the level of an anticipatory disclosure for claim 1 that recites "receiving a wireless signal having a desired signal and an interferer signal, by the wireless transceiver . . . wherein the wireless transceiver comprises a circuit for determining a signal strength of the interferer signal and a circuit for determining a signal strength of the desired signal." *Net MoneyIN, Inc. v. VeriSign, Inc.*, 545 F.3d 1359, 1371 (Fed. Cir. 2008 ("[U]nless a reference discloses within the four corners of the document not only all of the limitations claimed but also all of the limitations arranged or combined in the same way as recited in the claim, it cannot be said to prove prior invention of the thing claimed and, thus, cannot anticipate under 35 U.S.C. § 102.").

Moreover, the references to monitoring signal strength or adjusting supply currents in Rauhala's paragraph six do not describe measuring RSS and RSS_n at the same time when Rauhala's paragraph 17 is clear that detector DET provides an indication of the strength of either signal, but not both. *See* Pet. Reply 8–9.

Accordingly, Rauhala does not disclose in paragraph six determining circuits as arranged or combined in claim 1. Rather, Rauhala's invention is described as performing the monitoring of the signal strength of the receive channel and neighboring channel differently from determining the signal strength of the desired signal and determining the signal strength of the interferer signal that is part of the same received wireless signal as claimed.

Petitioner further contends that one of ordinary skill "would have also recognized that because signal conditions could change in an instant, adjusting the current supplied to the linear units [in Rauhala] based on

determinations made at different times would result in a faulty device that does not actually function as intended." Pet. Reply 9 (citing Ex. 1019 ¶¶ 47–49). Petitioner argues that "such a system would be impractical—so impractical, in fact, that Rauhala does not and would not describe such a system." Pet. Reply 9 (citing Ex. 2015 ¶ 70).

We do not agree with this argument. Rather, we agree with Patent Owner that Rauhala discloses "a different approach [from the challenged patent] involving measurement of different wireless signals." PO Sur-reply 8 *see* PO Sur-reply 11 ("Rauhala discloses a single detector that it describes as detecting a signal strength on 'either' one channel, 'or' another at one time.") (citing Ex. 1004 ¶¶ 14, 17; Ex. 2015 ¶¶ 69–72).

Responding to Petitioner's argument that a system that determines signal strength at different times is "impractical" and therefore Patent Owner's understanding of Rauhala is incorrect (Pet. Reply 9), Patent Owner contends that Rauhala merely provides an inferior solution to that claimed by the challenged patent. PO Sur-reply 12 ("There is no requirement that *Rauhala* disclose a good solution, and [Petitioner] cannot provide anticipation by arguing that the separate channel detections (*i.e.*, what was actually disclosed by *Rauhala*) wouldn't work as well as what [Petitioner] wishes that *Rauhala* disclosed.") (citing Pet. Reply 8–9; Ex. 1019 ¶¶ 48–49).

We recognize Dr. Larson's testimony, cited by Petitioner, referring to "the significant impractical handicap" of providing an indication of either one channel or another. Pet. Reply 9 (citing Ex. 2015 ¶ 70). But we do not agree with Petitioner's characterization that Dr. Larson agrees with Petitioner's position that "adjusting the current supplied to the linear units based on determinations made at different times would result in a faulty

device that does not actually function at intended." Pet. Reply 9 (citing Ex. 2015 ¶ 70). Rather, we understand Dr. Larson's testimony as recognizing the benefits of the claimed invention over Rauhala's techniques. Ex. 2015 ¶ 70; Pet. Reply 9 (citing Ex. 2015 ¶ 70); *see also* PO Resp. 3, 36, 37, 40 (citing Ex. 2015 ¶ 70); PO Sur-reply 9, 10, 12 (citing Ex. 2015 ¶ 70).

We are not persuaded by Petitioner's argument that, because Rauhala's disclosure is "impractical" and "would result in a faulty device," one of ordinary skill would have discounted a clear teaching that Rauhala discloses measuring either RSS or RSS_n, but not both at the same time. *See* Ex. 1004 ¶ 17; Pet. Reply 9; PO Sur-reply 8–13. We are not persuaded by Dr. Baker's insufficiently supported testimony that Rauhala's invention as described—the comparison of receive channel signal strength and neighboring channel signal strength measured at different times to thresholds—would be meaningless. Ex. 1019 ¶ 48; *see* Pet. Reply 9 (citing Ex. Ex. 1019 ¶¶ 48–49). Rather, because Dr. Larson's testimony is consistent with express disclosures in Rauhala, we give more weight to Dr. Larson's testimony that recognizes the claimed invention is superior to Rauhala's receiver. *See* Ex. 2015 ¶ 70; Pet. Reply 9 (citing Ex. 2015 ¶ 70). As such, we agree with Patent Owner that Rauhala discloses an invention that is different—perhaps inferior or even impractical in a dynamic system—from the invention claimed by the challenged patent. *See* PO Sur-reply 12 (citing Pet. Reply 8–9; Ex. 1019 ¶¶ 48–49; Ex. 2015 ¶ 70); Ex. 2015 ¶ 70 (Dr. Larson testifying that in a dynamic system the inability to determine both a desired signal strength and an interferer signal strength within the same received spectrum "is a significant impractical handicap.").

We, therefore, are not persuaded that one of ordinary skill would understand Rauhala's receiver to operate as arranged or combined in claim 1—"receiving a wireless signal having a desired signal and an interferer signal, by the wireless transceiver . . . wherein the wireless transceiver comprises a circuit for determining a signal strength of the interferer signal and a circuit for determining a signal strength of the desired signal."

Petitioner additionally disputes Patent Owner's contention that Rauhala's detector requires "re-tuning" after determining the desired signal strength (RSS) but before determining the neighboring channel signal strength (RSS_n). Pet. Reply 13; *see, e.g.,* PO Resp. 36–37 ("It is also apparent from *Rauhala* that the detector must be re-tuned to another channel in order to provide a second indication from it."); PO Sur-reply 1 ("*Rauhala's* detector does not detect an interferer signal strength of a received wireless signal, when it is re-tuned to detect total received signal strength of a different wireless signal."). Because we find Petitioner's analysis to be deficient in explaining how Rauhala discloses determining the two required signal strengths at the same time, we do not need to decide whether Rauhala discloses "re-tuning" of the receive to another channel in order to provide a second signal strength indication from the detector DET.

d. Claim 1 Conclusion

We do not see inconsistency between Rauhala's disclosure in paragraphs six and 17 nor in Rauhala's disclosure describing the indications provided by detector DET in paragraph 17. If there were inconsistency in Rauhala, however, it would be fatal to Petitioner's anticipation case. "It has long been understood that ambiguous references do not, as a matter of law,

anticipate a claim." *Wasica Fin. GmbH v. Cont'l Auto. Sys., Inc.*, 853 F.3d 1272, 1284 (Fed. Cir. 2017) (citing cases).

In sum, for the reasons discussed above, we find that Rauhala does not disclose a detector that determines the signal strength of the desired signal and determines the signal strength of an interferer signal from the same wireless signal having a desired signal and an interferer signal, as required by claim 1. Accordingly, we determine that Petitioner has not demonstrated by a preponderance of the evidence that claim 1 is anticipated by Rauhala.

2. Claims 3 and 8

Claims 3 and 8 include limitations similar to claim 1. Ex. 1001, 12:65–13:7 (claim 1), 13:43–52 (claim 3), 16:16–25 (claim 8). Petitioner similarly relies on Rauhala paragraphs 6, 17 and Figure 4 for these claims. Pet. 31–32, 33–34, 40, 42. Patent Owner does not separately address these claims. PO Resp. 33–34.

For the reasons given for claim 1, we determine that Petitioner has not demonstrated by a preponderance of the evidence that these claims are anticipated by Rauhala.

3. Summary and Conclusion

For the reasons given, we find that Petitioner has failed to demonstrate by a preponderance of the evidence that claims 1, 3, and 8 are anticipated by Rauhala.

F. Obviousness of Claim 4 over Rauhala and Masaaki

Petitioner also contends that claim 4 would have been obvious under 35 U.S.C. § 103 based on the combined teachings of Rauhala and Masaaki. Pet. 50–56. Petitioner relies on its arguments that Rauhala anticipates each

limitation of independent claim 3, from which claim 4 depends. Pet. 50. Petitioner additionally relies on Masaaki for teaching varying a current by varying an impedance of a circuit and that the impedance comprises a capacitor. Pet. 52–53 (citing Ex. 1005 ¶¶ 36, 38). Petitioner does not rely on Masaaki to disclose the limitations disputed by Patent Owner and discussed above. *See* Pet. 50–56.

For the reasons given above, we find that Petitioner has failed to demonstrate by a preponderance of the evidence that claim 4 would have been obvious in light of Rauhala and Masaaki.

G. Petitioner's Motion to Exclude

Petitioner moves to exclude Exhibits 2002, 2003, 2004, 2017, 2018, and 2020. Paper 26. We have not relied on any of these exhibits in our analysis. Accordingly, we deny the motion as moot.

III. CONCLUSION

Having considered all the arguments and evidence of record, we determine for the foregoing reasons that Petitioner has not demonstrated by a preponderance of the evidence that any of the challenged claims of the '825 patent are unpatentable.

In summary:

Claims	35 U.S.C. §	Reference(s)/Basis	Claims Shown Unpatentable	Claims Not Shown Unpatentable
1, 3, 8	102(b)	Rauhala		1, 3, 8
4	103(a)	Rauhala and Masaaki		4
Overall Outcome				1, 3, 4, 8

IV. ORDER

For the foregoing reasons, it is

ORDERED that claims 1, 3, 4, and 8 of the '825 patent have not been proven unpatentable by a preponderance of the evidence;

FURTHER ORDERED that Petitioner's Motion to Exclude (Paper 26) is denied; and

FURTHER ORDERED that, because this is a Final Written Decision, parties to the proceeding seeking judicial review of the decision must comply with the notice and service requirements of 37 C.F.R. § 90.2.

For PETITIONER:

Dinesh Melwani
Sangwoo Ahn
BOOKOFF MCANDREWS, PLLC
dmelwani@bomcip.com
sahn@bomcip.com

For PATENT OWNER:

Aaron Hand
BUNSOW DE MORY LLP
ahand@bdiplaw.com