UNITED STATES PATENT AND TRADEMARK OFFICE

BEFORE THE PATENT TRIAL AND APPEAL BOARD

APPLE INC.,
Petitioner

v.

THETA IP, LLC.,
Patent Owner

Inter Partes Review Case Nos.
IPR2024-00816
IPR2024-00817
IPR2024-00818
IPR2024-00819
IPR2024-00820

SUPPLEMENTAL DECLARATION OF DR. ASAD ABIDI

TABLE OF CONTENTS

I. INTRODUCTION 3

II. SUPPLEMENTAL OPINIONS 4

A. Behbahani's Variable Bandpass Filter Block Is A "Component" And "Circuit" "In The Signal Path" That Is Dynamically Adjusted 4

B. Dr. Tsividis's 2003 Article 6

C. The Prior Art Renders Obvious a Signal Strength Indicator Circuit 10

III. CONCLUSION 14

I, Asad Abidi, hereby declare the following:

I. INTRODUCTION

1. My name is Asad Abidi and I am over 21 years of age and otherwise competent to make this Declaration. I make this Declaration based on facts and matters within my own knowledge and on information provided to me by others.

2. I submitted declarations (Ex. 1003) in support of Petitioner's Petition for *Inter Partes* Review of U.S. Patent Nos. 7,010,330, 10,129,825, 10,524,202, 11,564,164, and 11,638,210 (the "Challenged Patents"). I understand the PTAB instituted the requested review of all five proceedings. I have been asked to address a few additional issues raised by Patent Owner in Patent Owner's Response dated March 21, 2025, and the accompanying expert declaration of Dr. Lawrence E. Larson (Ex. 2020). All of my opinions expressed in my original declaration (Ex. 1003) remain the same. My supplemental opinions set forth below cite the record in IPR2024-00816, which involves the '330 Patent. I do not intend these supplemental opinions to be limited to that proceeding, however. Each of the opinions set forth below is intended to apply equally to all five proceedings referenced on the title page.

3. As part of my work and in forming my opinions in connection with this proceeding, I have reviewed the following materials. For any prior art listed below,

it is my opinion persons of ordinary skill in my field would reasonably rely upon such prior art in forming opinions regarding the subject matter of this proceeding:

- Materials relied on for my previous Declaration
- Declaration of Dr. Lawrence E. Larson (Ex. 2020)
- Transcript of Deposition of Dr. Lawrence E. Larson (Ex. 1043)

II. SUPPLEMENTAL OPINIONS

A. Behbahani's Variable Bandpass Filter Block Is A "Component" And "Circuit" "In The Signal Path" That Is Dynamically Adjusted

4. The Petition, and my declaration (Ex. 1003) identified Behbahani's variable filter block—a "variable bandwidth adaptive dynamic range band pass filter"—as the component or circuit in the signal path whose impedance is dynamically varied, as claimed. Paper 1, 25, 35–51; Ex. 1003, ¶¶77-83, 85-86, 124.

5. As illustrated below, this variable filter block is dynamically adjusted by switching between two scaled low pass filter ("LPF") paths—one high power ("HP LPF") and the other low power ("LP LPF")—both of which feed into the same high pass filter ("HPF"):

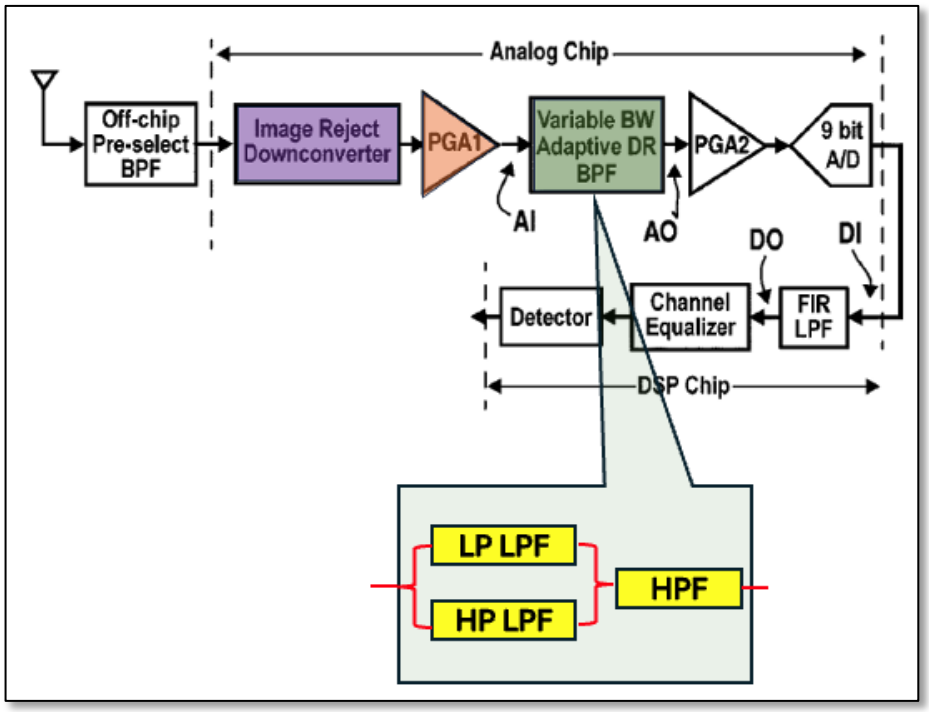

Ex. 1004, Fig. 2 (annotated). As illustrated above, a signal enters the variable BPF block, traverses one of the two LPF branches, and then passes through the HPF.

6. I understand that PO's expert, Dr. Larson, annotated the figure 16 of Tan (Ex. 1006) to show the scaled impedances between Behbahani's two filter branches:

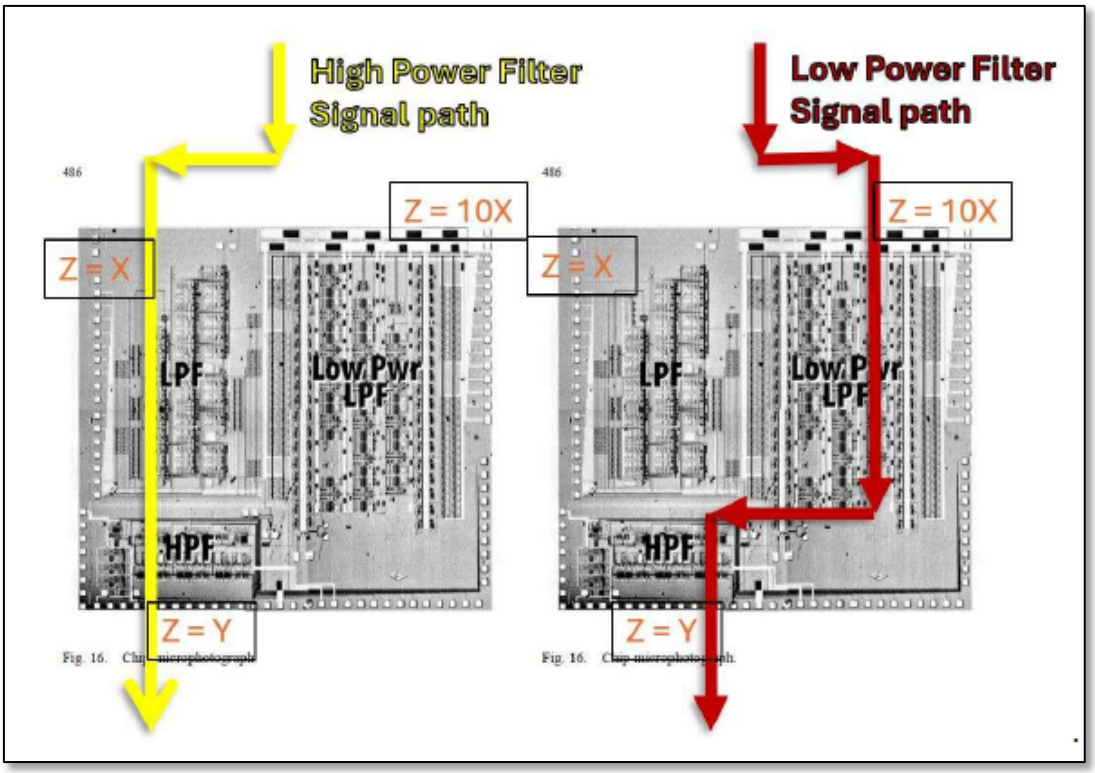

Ex. 2020, ¶82. I agree with Dr. Larson's assessment that Fig. 16 of Tan shows that regardless of which LPF branch is switched in operation, the signal flows through the same HPF within the overall variable bandpass filter block. I also agree with Dr. Larson's annotations that indicate a higher impedance of the variable bandpass filter block when the low power LPF is switched in than when the high power LPF is switched in.

B. Dr. Tsividis's 2003 Article

7. As explained in my declaration, I have read the January 2003 article titled, "Internally Varying Analog Circuits Minimize Power Dissipation," by the '330 patent's inventor, Dr. Tsividis (Ex. 1011). Importantly, Dr. Tsividis' January

2003 article points to Behbahani's filter branch switching approach as an exemplary means by which dynamic impedance scaling can be implemented. Ex. 1003, ¶100.

8. I understand the POR and Dr. Larson's declaration have focused on Fig. 12 of Tsividis's 2003 article. I have reviewed this circuit, which depicts an active RC circuit in which dynamic impedance scaling can be performed:

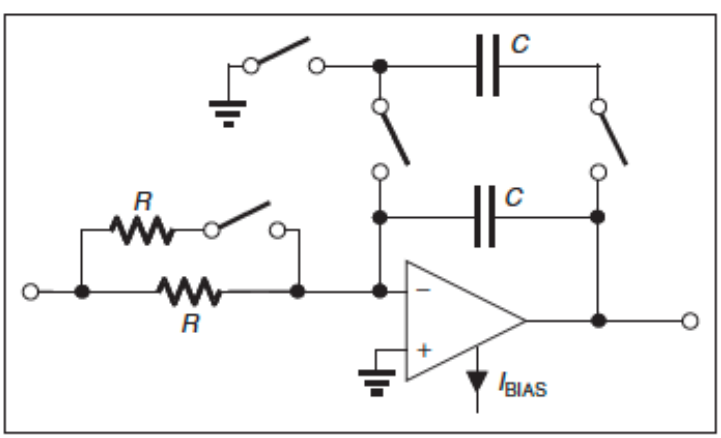

12. An active RC circuit in which dynamic impedance scaling can be performed without causing output transients.

Ex. 1011, Fig. 12. Fig. 12 of the Tsividis's 2003 article is a high-level example of a filter circuit that seeks to minimize transients by bringing both capacitors to an equal charge before switching the upper capacitor into the filter signal path:

> [W]hen it is acceptable to increase the noise floor, the upper resistor and upper capacitor are switched out of the circuit, and the op amp's bias can be reduced . . . .When the system is needed to process again signals with a low noise floor, the above two elements should be switched in; in order to avoid output transients, the op-amp bias is first increased; then the upper capacitor is switched between output and

> ground, so that its voltage becomes equal to that of the lower capacitor; and, finally, the two capacitors are connected in parallel.

Ex. 1011, 8.

9. I understand that the POR argues that the 2003 article's brief discussion of "Technique 4: Dynamic Structure Variation" captures Fig. 12. I disagree. As set forth in the preceding paragraph, Fig. 12 is a high-level active RC filter that seeks to minimize transients by equalizing both capacitors before switching the upper capacitor into the circuit. It does not dynamically vary the structure of the filter, but instead varies only the filter's cutoff frequency following the switching.

10. I have reviewed Dr. Larson's deposition testimony concerning Fig. 12 of the Tsividis's article. He was asked to consider a hypothetical modification to Fig. 12 as illustrated below:

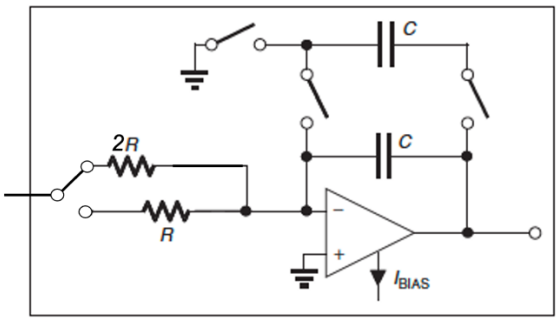

12. An active RC circuit in which dynamic impedance scaling can be performed without causing output transients.

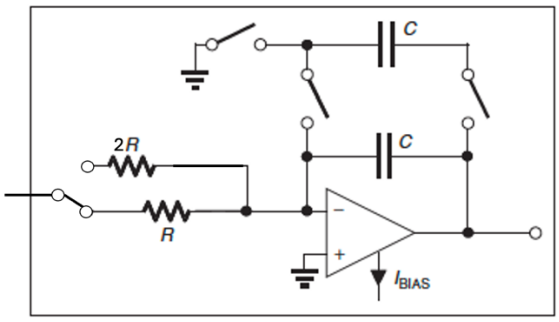

12. An active RC circuit in which dynamic impedance scaling can be performed without causing output transients.

Ex. 1011, Fig. 12 (modified per hypothetical); Ex. 1043, 57:7-58:24. As illustrated, rather than two resistors with equal value, (1) the resistors have different values and (2) either the upper or lower resistor is switched in at any given time. This is similar

to Behbahani's filter branch switching approach in many material respects. I understand that Dr. Larson testified this hypothetical is consistent with the Tsividis patents. Ex. 1043, 57:7-58:24. I agree. Routing the signal within a filter block as part of dynamically adjusting impedance and bias is entirely consistent with the Tsividis patents.

11. A POSITA would recognize that Behbahani's approach is functionally equivalent to this modified version of Fig. 12. As illustrated below, signal entering the variable BPF block is routed either through the upper LPF branch or the lower LPF branch, but not both simultaneously:

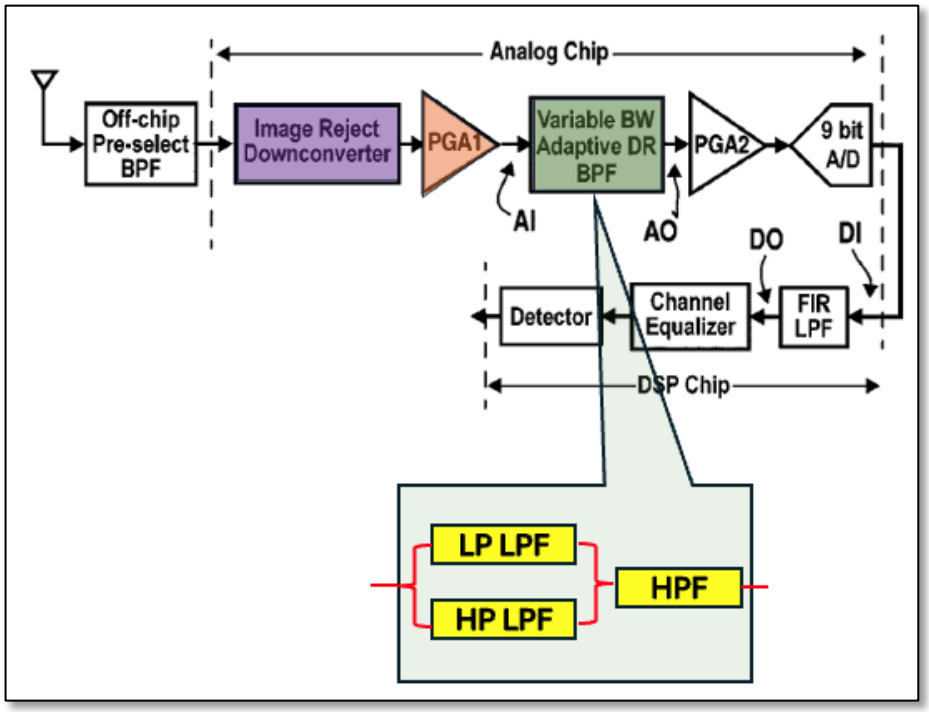

Ex. 1004, Fig. 2 (annotated). The fact that one filter branch is "off" or not passing signal at a given time remains within the scope of the Challenged Patents' disclosure and the Challenged Claims.

C. The Prior Art Renders Obvious a Signal Strength Indicator Circuit

12. As explained in the Petition and my declaration, the '330 Patent explains that a first signal strength is determined by comparing a cumulative signal strength of a first node to a cumulative signal strength at a second node. Paper 1, 30; Ex. 1003, ¶¶92-98. The Petition, and my declaration, established that "Behbahani teaches a nearly identical process for determining relative signal strengths," including "a first signal strength measured at node A_I." Paper 1, 31-32, 60-62; Ex. 1003, ¶¶92-98.

13. While I acknowledged that Behbahani "does not provide details about the specific circuit used to measure signal strength," a POSITA would indeed have understood that Behbahani suggested some circuit for measuring signal strength at A_I and A_O. Indeed, the purpose of Behbahani was to accommodate "a fully integrated receiver." It was our intent, which a POSITA would have understood, to include the described functionality integrated on a single chip, including circuitry for measuring signal strength at A_I and A_O. As I discussed in my original declaration, there is functionality described in the digital domain that was intended to be off chip (i.e., on a DSP chip), but the analog measurements A_I and A_O were taken on the "Analog

Chip" illustrated in Fig. 2 and an on-chip measurement circuit accomplished this functionality.

14. The claims recite a generic "signal strength indicator circuit" and the specification does not describe any specific circuitry for measuring signal strength, depicting Signal Strength Indicator ("SSI") circuits as generic boxes in Figs. 4 and 14:

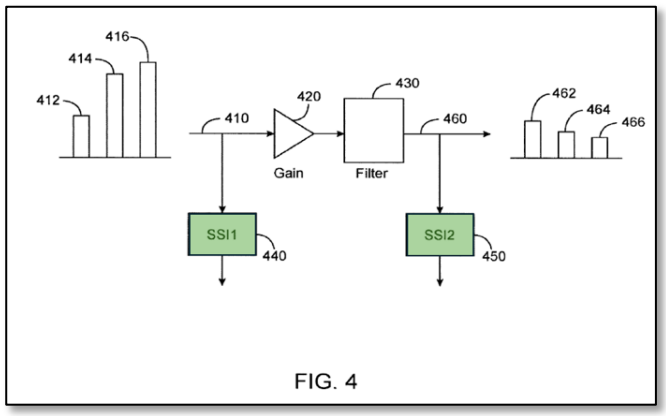

FIG. 4

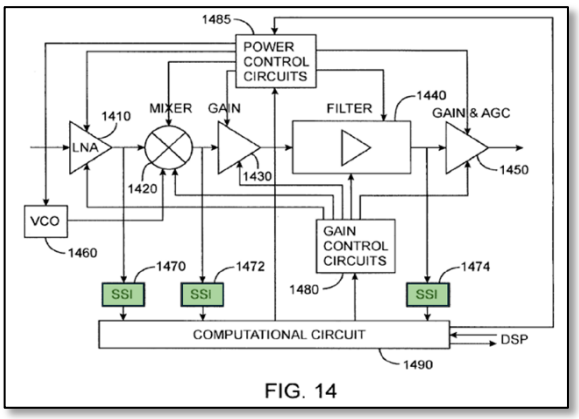

FIG. 14

Ex. 1001, Figs. 4, 14 (annotated). These figures offer no information regarding the circuitry, logic, or algorithms that perform the signal strength measurements. The accompanying text in the specification similarly lacks any technical detail, treating the SSI circuits as functional blocks without elaboration. A POSITA would therefore understand that the '330 Patent assumes the use of conventional, well-understood techniques for measuring signal strength. Consistent with this understanding, Behbahani also assumes that a POSITA would have understood how to implement a conventional and well-understood technique for measuring signal strength.

15. My original declaration noted that Tan describes a signal strength measurement circuit that was intended to be used in conjunction with Behbahani. Ex. 1003, ¶180. As illustrated in Tan's Fig. 8 below, peak detector circuits are placed at each node along the filter:

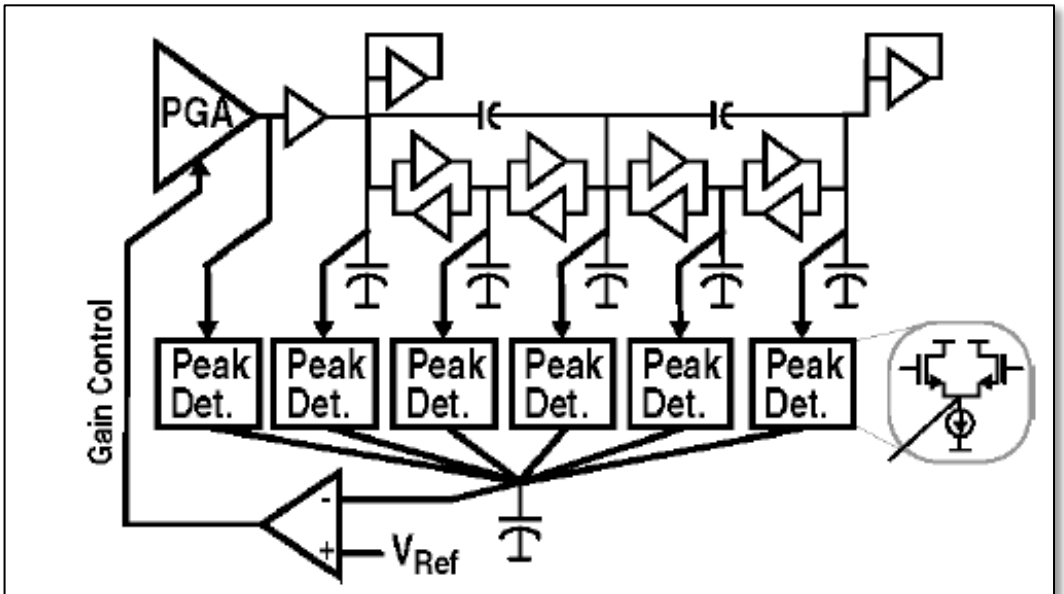

Fig. 8. Prefilter AGC prevents saturation at internal nodes.

Ex. 1006, Fig. 8. As I explained in my original declaration, "signal peaks are detected by current summing circuitry that is designed to 'lower the input signal' via gain control when peak values exceed a predefined limit." Ex. 1003, ¶180. I also explained that Tan's circuit detects signal strengths via these peak detectors at each of the illustrated points along the filter signal path and selects the largest peak value among them as a DC voltage that is compared with V_{Ref}. *Id*. I understand that Patent Owner (though not Patent Owner's expert, Dr. Larson) has disputed whether Tan's

circuit could properly function to provide A_I and A_O. It can, and I believe a POSITA would have considered using a simplified version of Tan's circuit to provide A_I and A_O a straightforward use of the circuit. Namely, each peak detector in Tan's circuit rectifies the total composite waveform at a given point along the filter path and outputs a representation of the maximum value across all points as a DC voltage. This means that it is measuring the strength of the desired signal and any interferers at each point along the filter path. Because there are peak detectors at the input (A_I) and output (A_O) of the filter, Tan's circuit provides a measure of the signal strength, capturing the desired and interferer signals, at both A_I and A_O, as I explained in my original declaration.

16. My original declaration also discussed the Khorram signal strength measurement circuit (Ex. 1027). I pointed to Khorram, which represents work I was involved in years before the Behbahani papers, as evidence that a POSITA would have understood how to implement a signal strength measurement in Behbahani's receiver. Ex. 1003, ¶181. I also noted that the Khorram circuit "produces a logarithmic signal-strength measurement to an accuracy of 1dB over a 80 dB dynamic range." *Id*. The Khorram circuit is, in some respects, similar to the Tan circuit in that they both provide measures of total energy across the spectrum of frequencies. But the Khorram circuit provides an improved dynamic range over the Tan circuit and, given this feature, would have been our preference at the time.

Indeed, we were contemplating the Khorram signal strength measurement circuit for Behbahani's receiver, but we did not discuss this circuit because we considered signal strength measurement well settled as of the Behbahani papers and not worth distracting from the new and novel subject matter that was our focus.

III. CONCLUSION

17. I declare that all statements made herein of my knowledge are true, and that all statements made on information and belief are believed to be true, and that these statements were made with the knowledge that willful false statements and the like so made are punishable by fine or imprisonment, or both, under Section 1001 of Title 18 of the United States Code.

Date: June 20, 2025

By: Asad A. Abidi

Asad Abidi

Asad Abidi Digitally signed by Asad Abidi Date: 2025.06.20 15:11:00 -07'00'