Trials@uspto.gov
571-272-7822

Paper 31
Date: November 24, 2025

UNITED STATES PATENT AND TRADEMARK OFFICE

BEFORE THE PATENT TRIAL AND APPEAL BOARD

APPLE INC.,
Petitioner,

v.

THETA IP, LLC,
Patent Owner.

IPR2024-00818
Patent 10,524,202 B2

Before KARA L. SZPONDOWSKI, AARON W. MOORE, and RUSSELL E. CASS, *Administrative Patent Judges*.

SZPONDOWSKI, *Administrative Patent Judge*.

JUDGMENT
Final Written Decision
Determining No Challenged Claims Unpatentable
Denying Patent Owner's Motion to Strike
35 U.S.C. § 318(a)

I. INTRODUCTION

We instituted an *inter partes* review of claims 1, 2, and 4–23 of U.S. Patent No. 10,524,202 B2, issued on December 31, 2019 (Ex. 1001, "the '202 patent"), in response to a Petition (Paper 1, "Pet.") filed by Apple Inc. ("Petitioner"). Paper 11 ("Inst. Dec."). Theta IP, LLC ("Patent Owner") filed a Response (Paper 15, "PO Resp."), Petitioner filed a Reply (Paper 17, "Reply"), and Patent Owner filed a Sur-reply (Paper 23, "Sur-reply"). Patent Owner also filed a Motion to Strike Petitioner's New Reply Arguments and Evidence (Paper 22, "Mot."), Petitioner filed an Opposition to Patent Owner's Motion to Strike (Paper 25, "Opp. Mot."), and Patent Owner filed a Reply in Support of the Motion to Strike (Paper 26, "Mot. Reply").

We held an oral hearing in this proceeding on August 27, 2025, and a copy of the transcript is entered into the record. Paper 30 ("Tr.").

We have jurisdiction under 35 U.S.C. § 6. This Decision is a Final Written Decision under 35 U.S.C. § 318(a) as to the patentability of the claims on which we instituted trial. Petitioner has the burden of proving unpatentability of a claim by a preponderance of the evidence. 35 U.S.C. § 316(e).

Based on the complete record, we determine that Petitioner has *not* shown, by a preponderance of the evidence, that claims 1, 2, and 4–23 of the '202 patent are unpatentable.

II. BACKGROUND

A. Real Parties-in-Interest

Petitioner identifies itself as the real party-in-interest. Pet. 78. Patent Owner also identifies itself as the real party-in-interest. Paper 3, 2 (Patent Owner's Mandatory Notices).

B. Related Matters

The parties identify the following district court cases and IPRs involving the '202 patent:

- *Theta IP, LLC v. Apple Inc.*, Case No. 6:23-cv-00314-ADA (W.D. Tex.) ("related litigation");
- *Theta IP, LLC v. Motorola Mobility LLC, et al.*, Case No. 1:22-cv-03441 (N.D. Ill.);
- *Theta IP, LLC v. Samsung Electronics Co., Ltd., et al.*, Case No. 6:20-cv-00160-ADA (W.D. Tex.); and
- *Lenovo et al., v. Theta IP, LLC*, IPR2023-00698.

Pet. 78; Paper 3, 2. The parties also identify the following district court cases and IPRs involving patents related to the '202 patent: *Theta IP, LLC v. Samsung Electronics Co., Ltd., et al*., Case No. 2:16-cv-527-JRG-RSP (E.D. Tex.), IPR2023-00694, IPR2023-00697, IPR2024-00816, IPR2024-00817, IPR2024-00819, and IPR2024-00820. Paper 3, 2–3; Pet. 78.

C. The '202 Patent (Ex. 1001)

The '202 patent is titled "Power Dissipation Reduction in Wireless Transceivers" and is generally directed to "[m]ethods and circuits for reducing power dissipation in wireless transceivers and other electronic circuits and systems." Ex. 1001, codes (54), (57). The '202 patent states

that in wireless networking, connectivity to the Internet can result in a corresponding drain on battery life in portable devices, such as notebooks and handheld computers. *Id.* at 1:24–32. The problem is further described as follows:

> One reason why this power drain is high is that electronic circuits are typically designed to function properly under worst-case operating conditions. For a wireless transceiver, the worst case condition is when a desired signal reception strength is low, while other transceivers or nearby electronic equipment generate interfering signals and other spurious noise.
>
> But a wireless transceiver does not always operate in these worst-case conditions. For example, a base station, router or access point may be nearby such that the received signal is strong. Also, there may be no interfering signals, or they may be relatively weak. In these situations, receiver circuit currents can be reduced below what is necessary for the worst case condition. If this is done, power dissipation is reduced, and battery life is increased.

Ex. 1001, 1:36–50.

The ’202 patent describes embodiments that “use bias current reduction, impedance scaling, gain, and other dynamic changes either separately or in combination to reduce power dissipation in response to better-than-worst case conditions.” Ex. 1001, 1:60–63.

Figures 2A and 2B, reproduced below, “illustrate examples of desired and interfering signals and noise that may be received by a circuit in a wireless receiver.” Ex. 1001, 3:19–21.

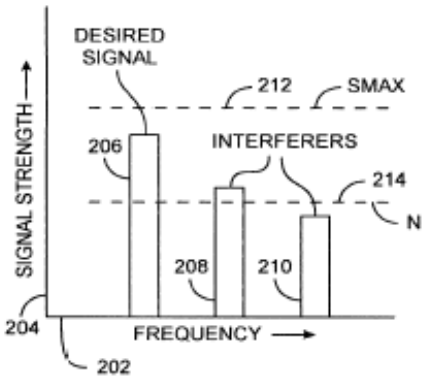

FIG 2A

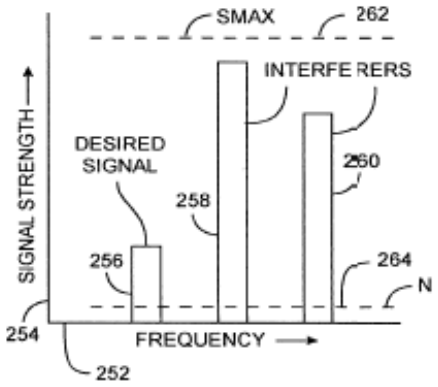

FIG. 2B

Figures 2A and 2B depict examples of desired signals. *Id.* at 5:33. Figure 2A shows received desired signal 206 is large in comparison to interfering signals 208 and 210, and is considered the best-case input signal. *Id.* at 5:38–39, 6:16–17. Figure 2B shows desired signal 256 is relatively weak compared to large interferers 258 and 260, and is considered the worst-case input signal. *Id.* at 5:56–58, 6:8–9.

Figure 6, reproduced below, "is an example of how a circuit's impedances may be scaled to reduce drive currents, and, depending on the circuit configuration used, associated bias currents as well." Ex. 1001, 7:49–51.

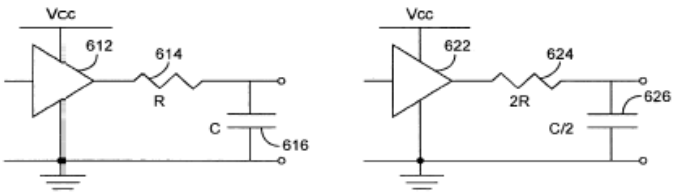

FIG 6

On the left, Figure 6 shows driver 612 with load R 614 and C 616. *Id.* at 7:52. On the right, Figure 6 shows driver 622 driving an impedance of 2R 624 and C/2 626. *Id.* at 7:53–54. The frequency response of the circuits are the same, "[b]ut the impedance of the load seen by driver 622 is double that seen by 612, thus the output current required by the driver 622 is reduced by one-half." *Id.* at 7:54–57.

Figures 8A–8D "illustrate some of the possible power saving techniques that may be used when received desired and interferer signals are all at a low power level." Ex. 1001, 3:35–37. Figure 8A, reproduced below, "is a block diagram of a functional block 820 and optional gain element 810 in accordance with an embodiment of the present invention." Ex. 1001, 8:25-27.

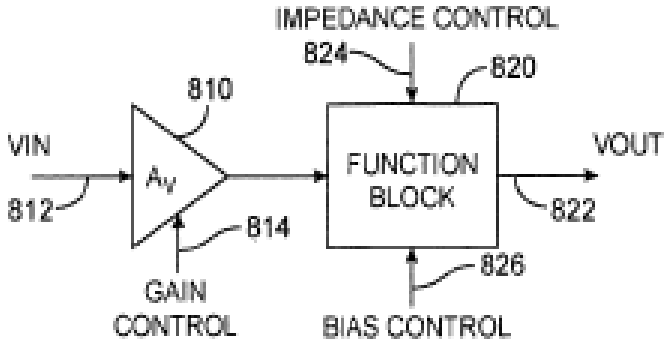

FIG. 8A

Figure 8A shows functional block 820 with bias control lines 826 and impedance control lines 824, and optional gain block 810 with gain control lines 814. Functional block 820 "may be a filter, mixer, amplifier, or other circuit or circuits in a wireless transceiver or other electronic circuits or system." *Id.* at 8:27–30. Figures 9A–9C similarly "illustrate one of the possible power saving techniques that may be used when a received desired

signal is strong while all interfering signals are at a low power level" and Figures 10A–10C "illustrate one of the possible power saving techniques that may be used when received desired and interferer signals are all at a high power level." *Id.* at 3:38–44.

D. Illustrative Claims

Of the challenged claims, claims 1, 6, 7, 11–14, 16, 18, 19, and 22 are independent. Ex. 1001, 12:63–18:42. Independent claim 1, reproduced below with Petitioner's identifiers in bolded brackets, illustrates the claimed subject matter:

> 1. **[(Pre(a)]** A method of reducing the power consumption of a receiver of a battery operated transceiver having a plurality of circuits, wherein the plurality of circuits comprise a receiver signal path comprising at least an amplifier, a mixer and a filter, **[(Pre(b)]** wherein the plurality of circuits are designed to function between a worst-case operating condition and a best case operating condition, wherein the worst-case operating condition is when a desired signal strength is low and an interferer signal strength is high and the receiver operates with a maximum power dissipation and the best-case operating condition is when the desired signal strength is high and the interferer signal strength is low and the receiver operates with a minimum power dissipation, the method comprising:
>
> **[1(a)]** receiving a signal comprising a desired signal and an interferer signal;
>
> determining a strength of the desired signal;
>
> determining a strength of the interferer signal;
>
> comparing the strength of the desired signal to the strength of the interfere signal; and

> **[1(b)]** dynamically adjusting at least one of an impedance, a bias or a gain of at least one of the amplifier, filter or mixer in the receiver signal path, responsive to the comparing.

Ex. 1001, 12:63–13:19. Independent claims 6, 7, 11–14, 16, 18, 19, and 22 recite similar method claims, with slight differences in the claim language. Ex. 1001, 13:41–18:37.

E. Prior Art and Asserted Challenges to Patentability

Petitioner asserts that claims 1, 2, and 4–23 are unpatentable based on the following challenges (Pet. 11):

Claim(s) Challenged	35 U.S.C. §[1]	Basis/References
1, 2, 4–23	103(a)	Behbahani,[2] Leete,[3] Tan[4]

In support of its proposed challenges, Petitioner relies on the Declaration of Dr. Asad Abidi.[5] *See* Exs. 1003, 1042. Patent Owner relies on the Declaration of Lawrence E. Larson, Ph.D. Ex. 2020. Deposition

---

[1] Because the earliest possible effective filing date of the '202 patent is before March 16, 2013, patentability is governed by the version of 35 U.S.C. § 103 preceding the Leahy-Smith America Invents Act ("AIA"), Pub L. No. 112–29, 125 Stat. 284 (2011). *See* Pet. 7.

[2] Behbahani et al., "Adaptive Analog IF Signal Processor for a Wide-Band CMOS Wireless Receiver," IEEE Journal of Solid-State Circuits, Vol. 36, No. 8, 1205–1217, August 2001 (Ex. 1004) ("Behbahani"). Petitioner contends Behbahani is prior art under 35 U.S.C. § 102(b). Pet. 12.

[3] Behbahani et al., "A 2.4-GHz Low-IF Receiver for Wideband WLAN in 0.6µm CMOS – Architecture and Front-End," IEEE Journal of Solid-State Circuits, Vol. 35, No. 12, 1908–1916, December 2000 (Ex. 1005) ("Leete"). Petitioner contends Leete is prior art under 35 U.S.C. § 102(b). Pet. 16.

[4] Behbahani et al., "A Broad-Band Tunable CMOS Channel-Select Filter for a Low-IF Wireless Receiver," IEEE Journal of Solid-State Circuits, Vol. 35, No. 4, 476–489, April 2000 (Ex. 1006) ("Tan"). Petitioner contends Tan is prior art under 35 U.S.C. § 102(b). Pet. 17.

[5] Dr. Abidi is a co-author on Behbahani, Leete, and Tan. Pet. 12, 16, 17.

transcripts for Dr. Abidi and Dr. Larson have been entered into the record. *See* Exs. 2021, 1043.

III. PATENT OWNER'S MOTION TO STRIKE

Patent Owner moves to strike the Supplemental Declaration of Dr. Abidi (Exhibit 1042) and portions of the Reply that discuss Exhibit 1042. Motion 1. We deny Patent Owner's motion for the reasons set forth below.

Patent Owner argues that Petitioner improperly attempts to gap-fill new testimonial evidence via the Reply Declaration in two ways. Motion 2–8. First, Patent Owner argues that, the Petition identified the high- and low-power low-pass filter portions of Behbahani as the components being dynamically adjusted, but the Reply identifies the whole Variable BW Adaptive DR BPF (hereafter also referred to as "Variable Bandpass Filter Block"). *Id.* at 3–6 (citing, *e.g.*, Ex. 1042 ¶¶ 4–6; Reply 6–8).

We agree with Petitioner that Petitioner's reliance on Behbahani's Variable Bandpass Filter Block is not a new theory raised in the Reply. *See* Opp. Mot. 4–6. Patent Owner's argument that the Petition "did not identify the filter block as 'the component' at issue" is incorrect. *See* Motion 4 (emphasis omitted). Each of the independent claims recites a "plurality of circuits . . . compris[ing] a [receiver] signal path comprising . . . a filter," (e.g., 1Pre(a), 6(Pre)), "a signal path comprising a plurality of circuits including . . . a filter" (e.g., 7Pre(a), 11Pre, 13Pre, 14Pre, 16Pre, 18Pre), "a signal path comprising . . . a filter" (e.g., 12Pre), or "a signal path comprising a plurality of circuits" (e.g., 19Pre, 22Pre).

In the arguments for element 1Pre(a),[6] the Petition states that Behbahani's "Variable BW Adaptive DR BPF satisfies the claimed 'filter'," which identifies the entire filter block as teaching one of the recited "plurality of circuits" and/or the "filter," depending on the claim language. Pet. 29; *see also id.* at 59 (claim 6), 61 (claim 7), 64 (claim 11), 65 (claims 12, 13), 66 (claim 14), 67–68 (claim 16), 69 (claim 18), 70 (claim 19), 72 (claim 22; Ex. 1003 ¶ 93 (same); Opp. Mot. 4–5 (identifying identification of the Variable Bandpass Filter Block in the Petition). Patent Owner's argument that the Variable Bandpass Filter Block was not cited for these limitations (Mot. 3–4) is not persuasive, given Petitioner's statement on page 29 of the Petition, addressing element 1Pre(a). Moreover, we understand Petitioner's statement at pages 50–51 of the Petition (addressing limitation 1(b))[7] that "switching from *Behbahani's* high-power filter to its low-power filter changes . . . a component (i.e., the filter)," refers to a change in the entire filter, i.e., Variable Bandpass Filter Block. Accordingly, Patent Owner's arguments are not persuasive.

Second, Patent Owner argues that Petitioner also improperly provides new, unsupported testimony from Dr. Abidi for the signal strength limitations, e.g., limitations 1(a) and 7(a). Mot. 6 (citing Ex. 1042 ¶¶ 12–16). Patent Owner contends the new testimony includes self-serving and unsupported testimony about what the Behbahani reference intended to convey to a person of ordinary skill in the art. *Id.* at 6–7 (citing Ex. 1042

---

[6] Petitioner references element 1(Pre(a)) for the equivalent elements in all of the independent claims.
[7] Similarly, Petitioner references limitation 1(b) for the equivalent limitation in all of the independent claims.

¶¶ 12–13). Patent Owner also argues that Dr. Abidi's Reply Declaration is improper because it offers new testimony about what a person of ordinary skill in the art would understand from Behbahani, which is new evidence not found or discussed in the Petition. *Id.* at 7. Patent Owner, therefore, argues that this testimony and related arguments should be stricken or otherwise excluded. *Id.* at 8 (citing Ex. 1042 ¶¶ 12–16; Reply 23–27).

Pursuant to 37 C.F.R. § 42.23(b), a reply "may only respond to arguments raised in the corresponding . . . patent owner response." We agree with Petitioner, for the reasons stated in the Opposition, that the arguments in the Reply and Reply declaration testimony are responsive to arguments raised in the Patent Owner Response. *See* Opp Mot. 7–12 (explaining the positions taken in the Petition, Patent Owner's arguments in Response, and the arguments presented in Reply); *see Corephotonics, Ltd. v. Apple Inc.*, 84 F.4th 990, 1008–1009 (Fed. Cir. 2023). Petitioner does not provide a new theory of unpatentability; rather, Petitioner responds and elaborates on the theory presented in the Petition to explain why Patent Owner's arguments are incorrect. *E.g., Chamberlain Grp., Inc. v. One World Techs., Inc.*, 944 F.3d 919, 925 (Fed. Cir. 2019) ("Parties are not barred from elaborating on their arguments on issues previously raised."); *Belden Inc. v. Berk-Tek LLC*, 805 F.3d 1064, 1081–82 (Fed. Cir. 2015) (reasoning that rebuttal evidence should be responsive such that it is offered "to explain, repel, counteract, or disprove the evidence of the adverse party"). "[T]he introduction of new evidence in the course of the trial is to be expected in [IPR] trial proceedings" and permissible "as long as the opposing party is given notice of the evidence and an opportunity to

respond to it." *Genzyme Therapeutic Prods. Ltd. P'ship v. Biomarin Pharm. Inc.*, 825 F.3d 1360, 1366 (Fed. Cir. 2016).

We also note that our Consolidated Trial Practice Guide ("CTPG") states that

> In most cases, the Board is capable of identifying new issues or belatedly presented evidence when weighing the evidence at the close of trial, and disregarding any new issues or belatedly presented evidence that exceeds the proper scope of reply or sur-reply. As such, striking the entirety or a portion of a party's brief is an exceptional remedy that the Board expects will be granted rarely.

CTPG at 80, 84 Fed. Reg. 64,280 (Nov. 21, 2019). We follow that guidance here.

Further, Patent Owner argues that Dr. Abidi's testimony as a co-author of Behbahani is "self-serving and unsupported." Mot. 6–7. The fact that Dr. Abidi is a co-author of Behbahani, as well as Petitioner's expert, is not, in and of itself, sufficient to discredit Dr. Abidi's testimony. The CTPG provides that "[t]he Board has broad discretion to assign weight to be accorded expert testimony." CTPG 35. We are capable of discerning from the testimony and the evidence presented whether Dr. Abidi's testimony should be entitled to any weight, either as a whole or with regard to specific issues. We will weigh the testimony on an issue-by-issue basis as appropriate. Moreover, to the extent that Patent Owner has pointed out the inadequacies of Dr. Abidi's testimony, we are also capable of noting those inadequacies and weighing that testimony accordingly.

For the foregoing reasons, Patent Owner's motion to strike is denied.

IV. ANALYSIS

A. Legal Standards

A claim is unpatentable under 35 U.S.C. § 103(a) if "the differences between the subject matter sought to be patented and the prior art are such that the subject matter as a whole would have been obvious at the time the invention was made to a person having ordinary skill in the art to which said subject matter pertains." *KSR Int'l Co. v. Teleflex Inc.*, 550 U.S. 398, 406 (2007). The question of obviousness is resolved on the basis of underlying factual determinations, including (1) the scope and content of the prior art; (2) any differences between the claimed subject matter and the prior art; (3) the level of skill in the art; and (4) objective evidence of nonobviousness, i.e., secondary considerations. *See Graham v. John Deere Co.*, 383 U.S. 1, 17–18 (1966). "In determining whether a claim is invalid as obvious, we compare the prior art to the claim language, and if necessary, after the claim language has been properly construed when the meaning or scope is in dispute." *Corephotonics*, 84 F.4th at 1003.

A patent claim "is not proved obvious merely by demonstrating that each of its elements was, independently, known in the prior art." *KSR*, 550 U.S. at 418. An obviousness determination based on a combination of references requires finding "both 'that a skilled artisan would have been motivated to combine the teachings of the prior art references to achieve the claimed invention, and that the skilled artisan would have had a reasonable expectation of success in doing so.'" *Intelligent Bio-Sys., Inc. v. Illumina Cambridge Ltd.*, 821 F.3d 1359, 1367–68 (Fed. Cir. 2016) (quoting *Kinetic Concepts, Inc. v. Smith & Nephew, Inc.*, 688 F.3d 1342, 1360 (Fed.Cir.2012)). Further, an assertion of obviousness "cannot be sustained

by mere conclusory statements; instead, there must be some articulated reasoning with some rational underpinning to support the legal conclusion of obviousness." *KSR*, 550 U.S. at 418.

In an *inter partes* review, the petitioner bears the burden of persuasion to prove "unpatentability by a preponderance of the evidence." *Dynamic Drinkware, LLC v. Nat'l Graphics, Inc.*, 800 F.3d 1375, 1378 (Fed. Cir. 2015) (quoting 35 U.S.C. § 316(e)). This burden of persuasion never shifts to the patent owner. *Dynamic Drinkware*, 800 F.3d at 1378 (citing *Tech. Licensing Corp. v. Videotek, Inc.*, 545 F.3d 1316, 1326–1327 (Fed. Cir. 2008). Petitioner must explain with particularity how the prior art would have rendered the challenged claims unpatentable. 35 U.S.C. § 312(a)(3); 37 C.F.R. § 42.104(b)(4) (2024) ("The petition must specify where each element of the claim is found in the prior art patents or printed publications relied upon.").

B. Level of Ordinary Skill in the Art

Petitioner contends a person of ordinary skill in the art "would have had a master's degree in electrical engineering or the equivalent, and two or more years of experience with wireless communications devices" and that "[a]dditional education or experience might substitute for the above requirements." Pet. 10 (citing Ex. 1003 ¶¶ 39–41).

Petitioner thus proposes a Master's degree with two years of experience, while Patent Owner proposes a Bachelor's degree with five years of experience. At the institution stage, we did not see a material difference in the proposals given that both parties also indicate that more education could substitute for less experience and vice versa, and thus adopted Patent Owner's proposal. Inst. Dec. 11. We requested that the

parties address during trial if either believed that the choice of one proposal over the other would make a difference in the patentability analysis. *Id.* Neither party has done so. Accordingly, because nothing in the record persuades us that our preliminary finding in the Institution Decision was incorrect, and because neither party has challenged our finding, we maintain our adoption of Patent Owner's proposed level of ordinary skill in the art.

C. Claim Construction

A claim "shall be construed using the same claim construction standard that would be used to construe the claim in a civil action under 35 U.S.C. § 282(b), including construing the claim in accordance with the ordinary and customary meaning of such claim as understood by one of ordinary skill in the art and the prosecution history pertaining to the patent." 37 C.F.R. § 42.100(b) (2024); *see also Phillips v. AWH Corp.*, 415 F.3d 1303 (Fed. Cir. 2005) (en banc).

Petitioner "applies the plain and ordinary meaning of all claim terms as understood by a [person of ordinary skill in the art] for all claim terms," as preliminarily adopted by the district court in the related litigation. Pet. 8–9; Ex. 2015. Following the Markman hearing, the district court maintained that the terms should be given their plain and ordinary meaning. Ex. 2025, 53–54.

In the related litigation, the parties disputed whether the "signal path" excludes the "digital signal processing" block, i.e., is limited only to analog components. Pet. 9; PO Resp. 41. The district court preliminarily agreed with Patent Owner that "signal path" should be given its "plain and ordinary meaning" and should not be limited to analog components. Pet. 8–9; Ex. 2015, 1; PO Resp. 41. After the Markman hearing, the district court

maintained that the term "signal path" should be construed according to its plain and ordinary meaning, i.e., that a "signal path" means the "path of the signal" and is not limited to analog signals. *See Theta IP, LLC v. Apple Inc.*, Case No. 6:23-cv-00314-ADA, Dkt. No. 118, 11–14 (W.D. Tex.); Ex. 2025, 11–14 (cited at Sur-reply 10 n.2).

Petitioner requests that the Board adopt the interpretation of "signal path" advanced by Patent Owner and adopted by the district court, i.e., that the signal path can be both analog or digital at different points. Pet. 10 (citing *Western Digital Corporation v. SPEX Technologies, Inc.*, IPR2018-00084, Paper 14 at 11 (PTAB Apr. 25, 2018); *General Electric v. Vestas*, IPR2018-00928, Paper 9 at 16–17 (PTAB Nov. 5, 2018); *10x Genomics, Inc. v. Bio-Rad Laboratories, Inc.*, IPR2020-00086, Paper 8 at 19 (PTAB Apr. 27, 2020)).

Patent Owner argues, as it did in the Preliminary Response, that Petitioner takes inconsistent positions in this IPR and in the related litigation regarding the claim interpretation of "signal path." PO Resp. 40–41. That is, Patent Owner argues that based on Petitioner's disagreement in the related litigation with Patent Owner's proposed construction, Petitioner has failed to meet the particularity requirements of 37 C.F.R. § 42.104(b)(3). *Id.*

In our Institution Decision, we disagreed with Patent Owner's argument. *See* Inst. Dec. 14–15. Specifically, we determined that Patent Owner relied on a flawed understanding of the Board's non-precedential decision in *Samsung Elecs. Am., Inc. v. Cobblestone Wireless LLC*, IPR2024-00319, Paper 16 at 13–23 (PTAB Jun. 24, 2024); Inst. Dec. 14–15; PO Resp. 40–41. We explained that in *Samsung*, the Board determined that Petitioner had failed to establish a reasonable likelihood of success because

it offered and relied on a claim construction that it failed to support, disagreed with, and disparaged, and that this claim construction was not agreed upon by the patent owner or adopted by a district court. *Samsung*, Paper 21 at 13–23. Specifically, in *Samsung*, the petitioner argued and submitted testimony from its expert that its proffered construction was "expressly excluded" by the specification of the challenged patent and was "contrary to [the term's] plain and ordinary meaning." *Id.* at 14–15, 19–20 (emphasis omitted). In reaching its decision in *Samsung*, the Board expressly "distinguish[ed] this case from situations where a petitioner relies on the ordinary meaning of a claim term, offers alternative constructions of a claim term, or relies on a construction agreed upon by the parties in the proceeding at issue." *Id.* at 21. Here, unlike in *Samsung,* Petitioner relies on the plain and ordinary meaning of the term "signal path," which was preliminarily and finally adopted by the district court in the related litigation. And, Patent Owner does not dispute that the term "signal path" should be given its ordinary meaning in this proceeding. PO Resp. 41. We similarly found the facts in *Hologic, Inc. v. Enzo Life Sciences, Inc.*, IPR2018-00019, Paper 21 at 5–7 (PTAB Nov. 28, 2018) distinguishable from those presented here. Inst. Dec. 15; s*ee Hologic*, Paper 21 at 4 (stating, for example, that "[n]early every time [p]etitioner discusses its use in the [p]etition of [p]atent [o]wner's proposed construction, [p]etitioner affirmatively disagrees with the construction it adopts.").

On November 3, 2025, the Director issued a precedential Decision in *Revvo Techs., Inc. v. Cerebrum Sensor Techs., Inc.*, IPR2025-00632, Paper 20 at 3–5 (Director Nov. 3, 2025) (precedential) addressing situations where a petitioner takes different claim construction positions before the Board and

a district court. In *Revvo*, the petitioner advanced its own proposed claim construction in a related district court litigation but adopted in the IPR a different proposed construction, which was advanced by the patent owner in the district court litigation. *Revvo* at 2. The Director acknowledged that "a petitioner is not necessarily precluded from arguing different claim construction positions before a district court and the Board," but that if the petitioner does so, it "should explain sufficiently why the different positions are warranted." *Id.* at 5. "For example," the Director explained, "if a party advances a narrow construction in the district court and the district court declines to adopt the narrow construction, the party would have sufficient reason for advancing the broader, court-adopted construction in a proceeding before the Board." *Id.*

Here, as in the Director's example, Petitioner advanced a narrower construction of "signal path" before the district court ("path for [the] analog signal"), which the district court declined to adopt. Pet. 9; Ex. 2015. Instead, the district court adopted a "plain-and-ordinary meaning" construction, which Patent Owner proposed. PO Resp. 41; PO Sur-reply 10 n.2; Ex. 2015; Ex. 2025, 5–14. In the Petition, Petitioner proposed applying the plain and ordinary meaning construction that had already been preliminarily adopted by the district court. *Compare* Pet. (filed May 1, 2024) *with* Ex. 2015 (preliminarily adopting plain and ordinary meaning construction on March 25, 2024). Applying *Revvo*, we find that Petitioner had a sufficient reason for advancing the broader, court-adopted construction in this IPR.

Thus, the parties do not dispute the meaning of "signal path," and we adopt the district court's construction of plain and ordinary meaning, as

agreed by the parties. *See* PO Resp. 41; Pet. 1-; Ex. 2025, 14. The dispute concerns the application of this and the surrounding claim language (i.e., "in the receiver signal path," "in the signal path") to the disclosures in Behbahani. *See* PO Resp. 41–45. Therefore, we will provide further discussion in the context of the parties' arguments regarding Behbahani below. However, we agree with Patent Owner's plain reading of the claim language in limitation 1(b) and the corresponding limitations in independent claims 6, 7, 11–14, 16, 18, 19, and 22 – i.e., we agree with Patent Owner that "[t]he plain language requires adjusting the impedance [or bias current] of a filter or other circuit, while it is in the signal path." *See* PO Resp. 49.

The parties also address the meaning of the terms "dynamically changing/adjusting,"[8] which Petitioner refers to as the "dynamic limitation." Pet. 9–10; PO Resp. 38–39. Petitioner similarly proposes the Board adopt Patent Owner's proposed construction, which was adopted by the district court in the related litigation both preliminarily and following the Markman hearing. Pet. 10, 42; Ex. 2015, 2–3; Ex. 2025, 40. In the Institution Decision, we adopted the district court's construction, that the term should be given its plain and ordinary meaning, which is "adjusting during operation based, at least in part, on information gathered during operation,"[9]

---

[8] The challenged claims recite "dynamically adjusting" (claims 1, 7, 14, 15, 18, 19, 21, 23); "dynamically decreasing/decreased" (claims 2, 5, 11, 17); "dynamically increasing/increased" (claims 4, 6, 8, 13, 22); and "dynamically reducing" (claims 9, 20). Independent claim 12 recites "causing an impedance . . .to be increased." Ex. 1001, 15:6–9.

[9] The district court's full construction is "[adjusting / adjusted / adjust / changing / decreased / increasing / increased / reducing / reduced / varying / vary] during operation based, at least in part, on information gained during

because there was no dispute between the parties. Inst. Dec. 14. We continue to do so for purposes of this Decision, for the same reasons as set forth above. That is, applying *Revvo*, we find that Petitioner had a sufficient reason for advancing the broader, court-adopted construction in this IPR.

We determine that it is not necessary to provide an express interpretation of any other claim terms for purposes of this Decision. *See Nidec Motor Corp. v. Zhongshan Broad Ocean Motor Co.*, 868 F.3d 1013, 1017 (Fed. Cir. 2017); *Vivid Techs., Inc. v. Am. Sci. & Eng'g, Inc.*, 200 F.3d 795, 803 (Fed. Cir. 1999) ("[O]nly those terms need be construed that are in controversy, and only to the extent necessary to resolve the controversy.").

D. Alleged Obviousness Over Behbahani, Leete, Tan

Petitioner contends claims 1, 2, and 4–23 would have been obvious over the combination of Behbahani, Leete, and Tan. Pet. 18–72. Patent Owner disputes Petitioner's contentions. PO Resp. 45–72. Specifically, Patent Owner argues that (1) Behbahani does not teach or render obvious determining a signal strength of the interferer signal or comparing signal strengths; and (2) Behbahani does not teach or render obvious dynamically adjusting a bias current or an impedance of a circuit in the receiver signal path. *Id.*

Claims 1, 6, 7, 11–14, 16, 18, 19, and 22 are all independent method claims. Ex. 1001, 12:63–18:42. Based on the similarities between the claims, we analyze independent claim 1 as representative. After reviewing the record developed at trial, we determine that Petitioner has *not* shown by

---

operation," which takes into account the variance in the claim language in the independent claims. Ex. 2025, 40.

a preponderance of the evidence that claim 1 would have been obvious over the combination of Behbahani, Leete, and Tan. Petitioner's contentions, Patent Owner's arguments in opposition, and our analysis are set forth below.

1. Behbahani (Ex. 1004)

Behbahani is titled "Adaptive Analog IF Signal Processor for a Wide-Band CMOS Wireless Receiver" and generally describes a receiver that implements adaptive dynamic range ("DR") in the IF section. Ex. 1004, 1205. Behbahani explains that

> Most wireless systems are designed for the worst case; that is, the dynamic range is specified for the desired signal at a minimum detectable level, accompanied by the largest anticipated interferers. In practice, the receiver only infrequently needs this high instant DR. DR is obtained at the expense of a disproportionate rise in power consumption: doubling the power consumed by a circuit lowers its noise floor by 3 dB with constant IP3, thus raising its spurious-free dynamic range (SFDR) by only 2 dB. An important idea here, which has also been noted elsewhere [4], is that providing no more than the required DR at any given time lowers the *average* power consumption.

Id.

Figure 2, reproduced below, shows a block diagram of the receiver.

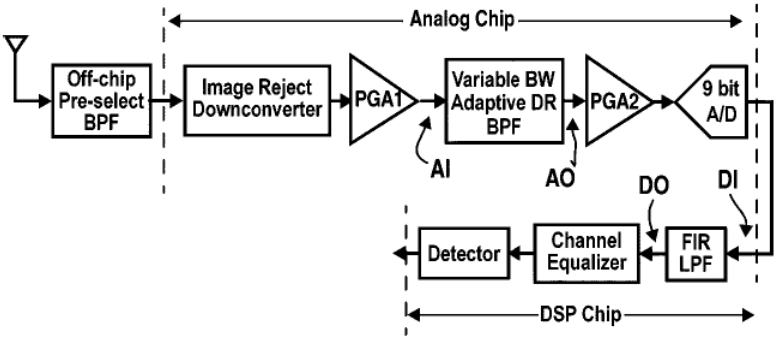

Fig. 2. Block diagram of complete WLAN receiver.

Ex. 1004, 1205. Figure 2 depicts a "Block diagram of [a] complete WLAN receiver," and focuses on the IF section of the receiver, which follows image rejection, and includes a prefilter programmable gain amplifier ("PGA1"), Variable BW Adaptive DR Bandpass Filter ("BPF"), post-filter PGA ("PGA2"), and a continuously variable gain amplifier ("VGA"). *Id.* at 1205. Behbahani states that Figure 2 "is taken from [Tan]" and "[t]he front-end and image-reject downconversion sections of the RX are described in [Leete]." *Id.* Behbahani also states that "[t]he details of the BPF design are presented elsewhere," and cites to Tan. *Id.* at 1210.

Figure 3 of Behbahani, which depicts three different scenarios for received signals, is reproduced below.

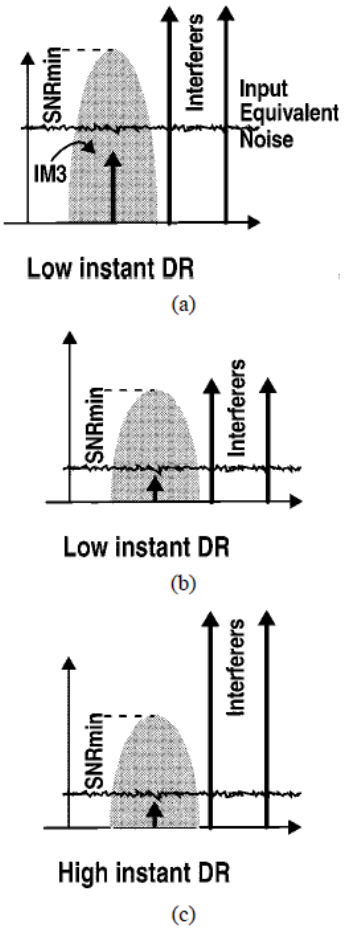

Fig. 3. Three different scenarios for received signals. (a) Strong desired signal. High noise can be tolerated. (b) Weak desired signal and weak interferers. Low linearity can be tolerated. (c) Weak desired signal and large interferers. Low noise and high linearity is required.

Ex. 1004, 1206. Figure 3 depicts three scenarios for received signals. *Id.* Figure 3(a) depicts a strong desired signal where high noise can be tolerated. *Id.* Figure 3(b) depicts a weak desired signal and weak interferers, where low linearity can be tolerated. *Id.* Figure 3(c) depicts a weak desired signal and large interferers where low noise and high linearity is required, and is the "worst-case." *Id.*

Behbahani describes two types of adaptive DR, sliding and step, and states that the circuits comprising the receiver shown in Figure 2 use both types. Ex. 1004, 1206. "In sliding DR, the *instant* DR of the RX is constant

but slides to best accommodate the input signal," whereas in step DR, the "DR may be *stepped up* by substituting a scaled version of a nominal circuit." *Id.*

Figure 4 of Behbahani, reproduced below, depicts an illustration of how to achieve slide and step DR.

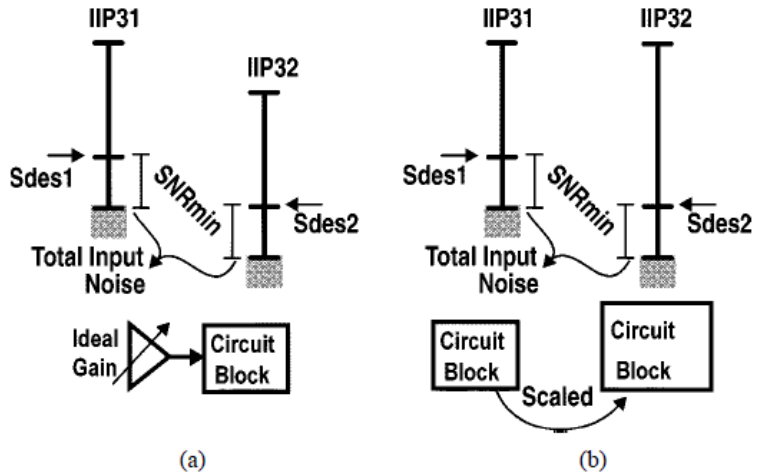

Fig. 4. An illustration of how to achieve: (a) slide DR with preamplification and (b) step DR by substitution of a scaled circuit block.

Ex. 1004, 1206. Figure 4(a) "shows how, by adding a gain stage in front of a noisy and nonlinear circuit block, input referred noise and IIP3 drop by the gain of the amplifier" which "*slides* down the entire DR and enables detection of a weaker signal accompanied by weak interferers." *Id.* Figure 4(b) shows scaling up all the transistors in a circuit and scaling down all resistors by the same factor, i.e., substituting a scaled version of a nominal circuit. *Id.* Behbahani states that Figure 4(b) results in lowering input mean square noise and raising bias current proportional to the scale factor, while IIP3 remains unchanged, allowing the scaled circuit to pass a weak desired signal accompanied by strong interferers. *Id.*

Behbahani explains that "[t]he on-chip filter is usually the bottleneck to achievable DR in a fully integrated RX." Ex. 1004, 1207. In the scenario shown in Figure 4(b), "[t]wo filters are implemented with the same topology, but one, scaled up to consume 10x more power, offers 10x lower mean square noise but the same linearity." *Id.* An algorithm, described below, senses which conditions are present and in the first two instances (shown in Figures 3(a) and 3(b)), employs a BPF dissipating low power. *Id.* In the instance shown in Figure 3(b), i.e., the worst-case scenario, "the high-power scaled filter is switched in raising total DR." *Id.* In the algorithm, "[s]ignal power is sensed at four points along the IF strip (Fig. 2): input and output of the analog BPF and input and output of the digital channel select filter." *Id.* "These measured signal levels indicate how much of the received signal is being rejected, respectively, by the analog filter and the digital filter." *Id.* This process is further described as follows;

> The signal at the output of the digital filter (point D_O in Fig. 2) is only the desired channel, with possibly some possible IM3 from adjacent interferers. By comparing the signal level at the output of the analog BPF *(A_O)* and at the input of the A/D *(D_I)*, the post-filter gain is measured. Then, by comparing the signal level at the input and the output of the digital filter *(D_I* and *D_O)*, the relative strength of the out-of-channel signal that passes through the analog filter is calculated. The signal level at A_I and A_O is a measure of the out-of-band interferers being rejected by the analog BPF. If the *desired* signal at the output of the analog BPF is strong, as measured by Power_{Do}–$\text{Gain}_{\text{Post-analog-filter}}$, the scenario is as shown in Fig.3(a). If the total signal power is comparable at A_I and A_O, and at D_I and D_O, the condition is like Fig. 3(a) or (b). In both cases, the required instant DR is low. If the signal levels are significantly different at either of the above pairs of nodes *(A_I* and *A_O* and *D_I* and *D_O*) and there is a weak signal at D_O, the condition must be the one

shown in Fig. 3(c).

Id.

2. Leete (Ex. 1005)

Leete is titled "A 2.4-GHz Low IF Receiver for Wideband WLAN in 0.6µm CMOS – Architecture and Front-End," and generally describes the "2.4–GHz front-end and the first downconversion section of a fully integrated low-IF receiver." Ex. 1005, 1908.

Figure 1, reproduced below, shows a block diagram of the dual-conversion low-IF receiver.

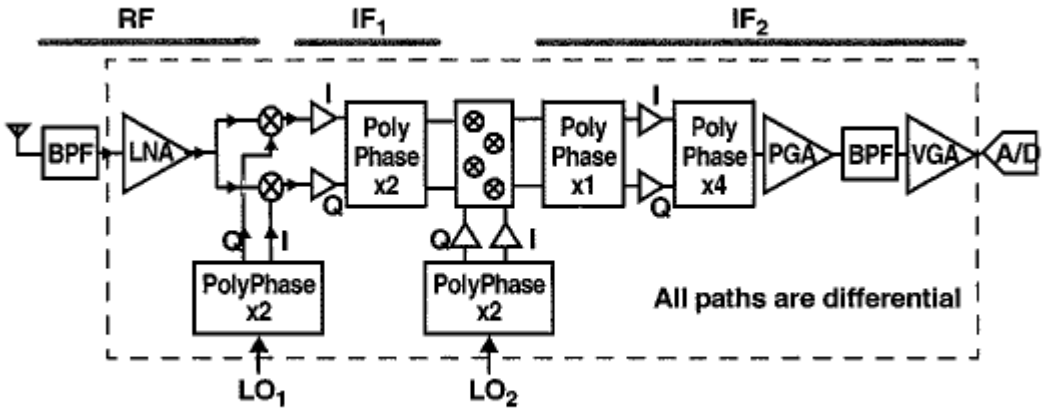

Fig. 1. Receiver block diagram.

Ex. 1005, 1090. Figure 1 shows a receiver block diagram with RF front-end comprising a low noise amplifier (LNA) and an RF quadrature mixer, which downconverts the RF signal to the first IF (IF1). *Id.* at 1908–1909.

3. Tan (Ex. 1006)

Tan is titled "A Broad-Band Tunable CMOS Channel-Select Filter for a Low-IF Wireless Receiver," and generally describes "a broad-band bandpass filter (BPF) designed as a channel-select filter for wireless applications" that "is implemented as a low-pass filter (LPF) in series with a

high-pass filter (HPF) for lower power consumption compared to true BPF." Ex. 1006, 476. Tan's Figure 1, which shows a block diagram of a receiver, is similar to Behbahani's Figure 2, reproduced above. *Id.* at 477. Tan describes the "Variable BW BPF" block. *Id.* at 476–488.

Figure 16, reproduced below, depicts a chip microphotograph of variable-gain BPF.

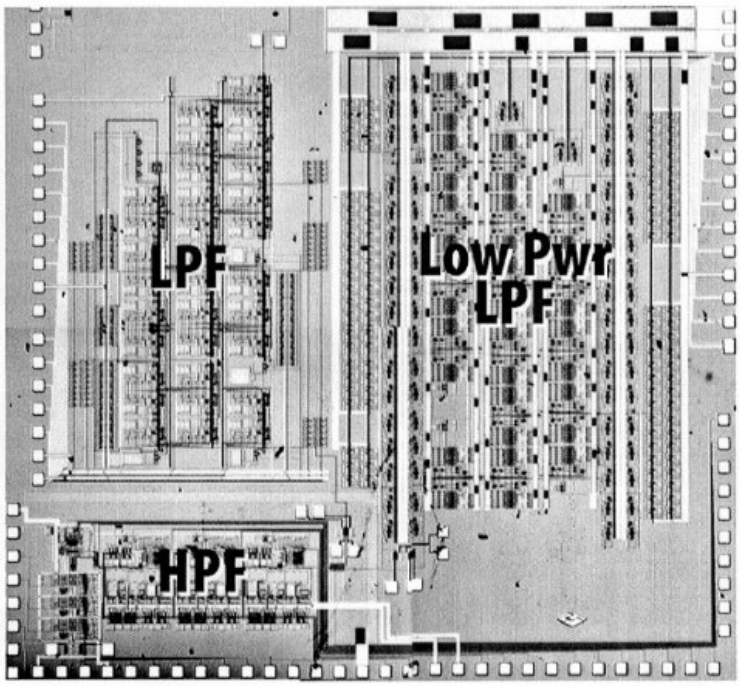

Fig. 16. Chip microphotograph.

Ex. 1006, 486. Figure 16 depicts a chip microphotograph of variable-gain BPF, including LPF, HPF, and Low Pwr LPF. *Id.*

4. Analysis of Independent Claim 1

a) Preamble

Petitioner contends that the combination of Behbahani and Leete teaches the preamble. Pet. 18–41.

Preamble 1Pre(a) recites "[a] method of reducing the power consumption of a receiver of a battery operated transceiver having a plurality of circuits, wherein the plurality of circuits comprise a receiver signal path comprising at least an amplifier, a mixer, and a filter." Ex. 1001, 12:62–67.

Petitioner contends that that Behbahani's "focus is saving power in a wireless device" and it does so by implementing "an 'adaptive dynamic range' method to save power by decreasing the dynamic range when conditions are better than worst case." Pet. 19–20 (citing Ex. 1005, 1205). Petitioner also asserts that a person of ordinary skill in the art would understand that Behbahani is intended for a "battery-operated transceiver" for several reasons and "would have been motivated to implement the described receiver in such a device." *Id.* at 20–21 (citing Ex. 1005, 1205, 1216; Ex. 1003 ¶¶ 64–73). In addition, Petitioner contends that a person of ordinary skill in the art would have understood that Behbahani teaches that its receiver circuitry is intended to be used in a mobile device with a complete transceiver. *Id.* at 21–22 (citing Ex. 1005, 1207–1208; Ex. 1003 ¶¶ 62–63).

Petitioner relies on the combination of Behbahani and Leete to teach "wherein the plurality of circuits comprise a receiver signal path comprising at least an amplifier, a mixer, and a filter." Pet. 22. According to Petitioner, Behbahani and Leete "describe the same research, focusing on different aspects of the same receiver circuit, and were intended to be used in conjunction." *Id.* (citing Ex. 1003 ¶ 75). Specifically, Behbahani's Figure 2 describes the "complete WLAN receiver" circuitry, where "[t]he front-end and image-reject downconversion sections of the [fully integrated receiver,

RX] are described in [Leete]," and "the IF section is the main focus of [Behbahani]." Ex. 1004, 1205 (cited at Pet. 22–23).

Petitioner contends that Leete provides the details of the "Image Reject Downconverter" box in Behbahani's Figure 2, including low noise amplifier (LNA) and RF quadrature mixer, which are depicted in Leete's Figure 1. Pet. 23–24. Petitioner provides an annotated Figure 2 of Behbahani, modified with Figure 1 of Leete, reproduced below.

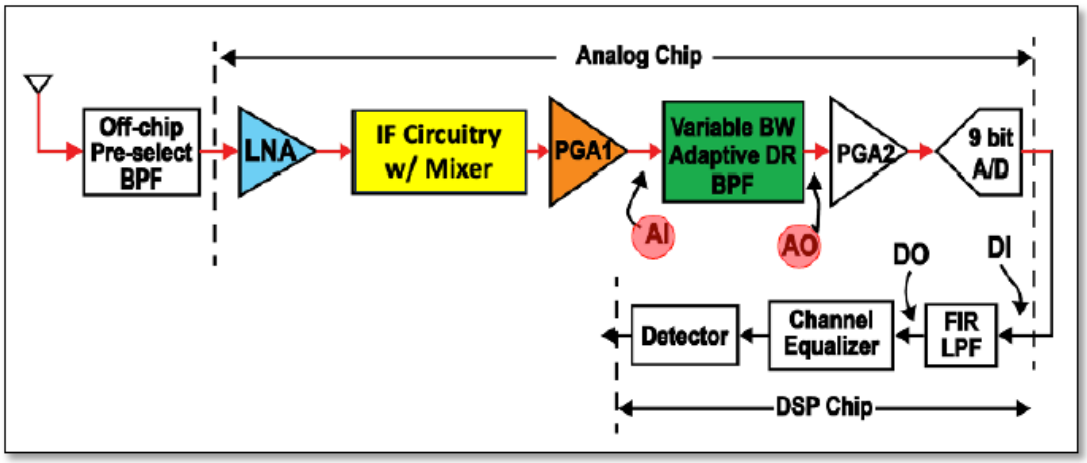

Pet. 25. Petitioner's annotated Figure 2 of Behbahani replaces the "Image Reject Downconverter" box with the LNA and other IF circuitry, including the mixer stage, as shown in Leete's Figure 1.

Petitioner contends that a person of ordinary skill in the art would have been motivated to combine Behbahani and Leete for several reasons, including (1) that Behbahani expressly motivates the combination because it teaches that Leete provides the receiver details; (2) the "LNA->mixer->filter topology is commonplace"; (3) that placing Leete's LNA in Behbahani's circuit uses a known technique to improve a similar device in the same way; and (4) that Leete's LNA would provide benefits, including "the ability [to]

introduce gain without significant noise, improving the receiver's ability to recover a desired signal." Pet. 25–26 (citing Ex. 1003 ¶¶ 75–87).

Therefore, Petitioner contends that any of the LNA or two programmable gain amplifiers (PGA1 or PGA2) in Behbahani and Leete teach the claimed "amplifier," and that Leete's quadratic RF mixer teaches the claimed "mixer." Pet. 26–28. Petitioner further contends that Behbahani's "Variable BW Adaptive DR BPF satisfies the claimed 'filter.'" Pet. 29.

Preamble 1(Pre(b)) recites "wherein the plurality of circuits are designed to function between a worst-case operating condition and a best case operating condition, wherein the worst-case operating condition is when a desired signal strength is low and an interferer signal strength is high and the receiver operates with a maximum power dissipation and the best-case operating condition is when the desired signal strength is high and the interferer signal strength is low and the receiver operates with a minimum power dissipation, the method comprising." Ex. 1001, 12:67–13:9.

Petitioner contends that Behbahani uses step and slide based adaptive DR method to save power. Pet. 30 (citing Ex. 1004, 1205–1207). Relying on Figure 3, Petitioner contends that Behbahani describes three different desired and interferer signal scenarios, where Figures 3(a) and 3(b) depict better than worst-case, and Figure 3(c) depicts worst-case conditions. *Id.* at 31 (citing Ex. 1004, Fig. 3). Petitioner contends that Behbahani's receiver uses the high-power filter, operating with maximum power dissipation, during worst-case conditions (i.e., Figure 3(c)). *Id.* at 31–32 (citing Ex. 1004, 1205–1207; Ex. 1003 ¶¶ 103–105). Petitioner contends that when Behbahani's "system transitions from worst-case conditions (e.g., Fig. 3(c))

to a strong desired signal (e.g., Fig. 3(a)), it saves power by switching from the high-power filter to low-power filter." *Id.* (citing Ex. 1003 ¶¶ 101–107). According to Petitioner, a person of ordinary skill in the art "would have understood that under a best-case operating condition Behbahani's receiver operates with a minimum power dissipation (i.e., using the low powered filter and decreasing the gain at PGA1, which slides the dynamic range up and increases the noise floor.)" *Id.* at 33–34 (citing Ex. 1004, 1206–1207; Ex. 1003 ¶ 100).

Patent Owner does not respond to Petitioner's arguments as to the preamble. *See generally* PO Resp. We will set forth and address Patent Owner's contentions as to Behbahani's Variable BW Adaptive DR BPF (Variable Bandpass Filter Block) below in connection with limitation 1(b).

After considering the evidence and arguments of the complete record, we determine that Petitioner has shown, by a preponderance of the evidence, that Behbahani and Leete teach the preamble, for the reasons set forth by Petitioner. Because we are persuaded that Petitioner has shown that Behbahani and Lette teach the subject matter recited in the preamble, we do not decide whether the preamble is limiting for purposes of this Decision. Neither party presents arguments as to whether the preamble is limiting.

b) Limitation 1(a)

Limitation 1(a) recites "receiving a signal comprising a desired signal and an interferer signal; determining a strength of the desired signal; determining a strength of the interferer signal; comparing the strength of the desired signal to the strength of the interfere signal." Ex. 1001, 13:14–15.

(1) Petitioner's Contentions

Petitioner contends that Behbahani's "wireless receiver receives a wireless signal" that "includes a desired signal component and interferer signals." Pet. 35–36 (citing Ex. 1005, 1205, 1207; Ex. 1003 ¶¶ 95–96)). Petitioner contends that Behbahani "teaches a nearly identical process [to that described in the '202 patent] for determining *relative* signal strengths and using that information to employ its adaptive sliding DR and adaptive step DR techniques." Pet. 37; *see id.* at 35–36, 39. In support of this argument, Petitioner relies on Figure 4 of the '202 patent, which "compar[es] a cumulative signal strength at a first node to a cumulative signal strength at a second node." *Id.* at 36.

Petitioner contends that Behbahani also "teaches additional measurement nodes that allow the system to determine *absolute* signal strengths in addition to relative signal strengths." Pet. 37. Petitioner argues that in Behbahani "signal power is sensed at the input and output of filters to indicate how much of the received signal is being rejected." *Id.* at 37–38 (citing Ex. 1004, 1207). Specifically, Petitioner argues that Behbahani "teaches determining desired and interferer signal strengths by taking signal strength measurements at two nodes on the analog signal path–A_I and A_O– and at two nodes on the digital signal path–D_I and D_O." *Id.* at 38 (referring to Ex. 1004, 1207, Fig. 2).

Petitioner argues that Behbahani "expressly teaches comparing the desired and interferer signal strengths." Pet. 38. That is, Petitioner argues that as in the '202 patent, in Behbahani "[t]he interferer signal power that remains after the *analog* filter is then calculated by comparing the difference between signal levels into and out of the *digital* filter." *Id.* at 38–39 (citing

Ex. 1004, 1207). Petitioner contends that "[f]rom these two sets of measurements, Behbahani can determine the total interferer signal strength received on the signal path." *Id.* at 39 (citing Ex. 1003 ¶ 117). Petitioner additionally relies on Figure 3 of Behbahani, which "describes three different desired and interferer signal scenarios, each of which turns on determining the relative desired and interferer signal strengths." *Id.* at 40 (citing Ex. 1004, Fig. 3; Ex. 1003 ¶ 118). Petitioner also contends that Behbahani expressly teaches determining absolute desired signal strength, and renders obvious determining absolute interferer strength. *Id.* at 38–41.

(2) Patent Owner's Arguments

Patent Owner argues that Behbahani does not disclose any mechanism for performing the functions in limitation 1(a). PO Resp. 68. Patent Owner further argues that Petitioner has failed to show "comparing" the alleged determined desired signal with an alleged determined interferer signal. *Id.* Without this required "comparison," Patent Owner argues that all subsequent limitations that require actions "responsive to" or "based on" that comparison also fail. *Id.* at 70.

(3) Analysis

We agree with Patent Owner that Petitioner has not shown that Behbahani teaches "comparing the strength of the desired signal to the strength of the interfere signal," as recited in limitation 1(a). *See* PO Resp. 68–69; Sur-reply 21–23. Although Petitioner argues that Behbahani "expressly teaches comparing the desired and interferer signal strengths," Petitioner does not cite to sufficient evidence in support of this statement. Pet. 38.

The basis of Petitioner's argument is that Behbahani teaches the same process for determining signal strengths as shown in Figure 4 of the '202 patent. Figure 4 of the '202 patent is reproduced below:

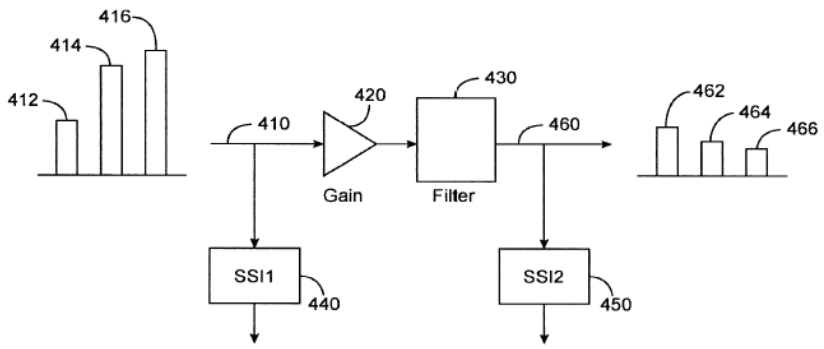

FIG. 4

Figure 4 shows, among other things, signal strength indicator circuits 440 and 450 connected to input line 410 and output line 460, on either side of gain element 420 and filter 430. Ex. 1001, 6:53–57. The input signal on input line 410 is shown as desired signal 412 and interferers 464 and 466. *Id.* at 59–61. Figure 4 is further described as follows.

> The signal strength indicators 440 and 450 do not provide information as to the relative sizes of the desired and interfering signals. Rather, a cumulative signal level is provided at their outputs. For example, *the first signal strength indicator 440 outputs a level corresponding to the sum of desired signal 412 and interfering signals 414 and 416*, while *the second signal strength indicator 450 provides a signal level corresponding to the sum of desired signal 462 and interfering signals 464* and 466. In this specific example, the gain of the gain and filter circuit combinations is shown as approximately one, while the interfering signals 414 and 416 signal levels are reduced.

> *A comparison of the signal levels provided by the signal strength indicators 440 and 450 indicates that much of the combined received signal on line 410 has been filtered.* Accordingly, it may be deduced that large interfering signals present at the input are being filtered by the filter 430. From this information, as will be shown in greater detail below, the bias, impedance, and gain of the gain stage 420 and filter 430 combination may be optimized to reduce power dissipation.

Ex. 1001, 6:61–7:13 (emphasis added). In other words, Figure 4 shows a comparison of a *sum of the desired and interferer signals output from the strength indicator circuits*, not a comparison of the strength of the desired signal and the strength of the interferer signal, as required by the claim language. *See* Sur-reply 22–23. The '202 patent describes Figure 4 as "an embodiment," and claims are not limited to specific embodiments described in the specification. *See Phillips v. AWH Corp.*, 415 F.3d 1303, 1323 (Fed. Cir. 2005) (en banc). Petitioner even admits that Figure 4 "compar[es] a *cumulative* signal strength at a first node to a *cumulative* signal strength at a second node." Pet. 36 (emphasis added).

In the Reply, Petitioner argues that Patent Owner "ignores the substance of the mapping" in arguing that Petitioner focused solely on the measurements of the signal strength. Reply 23–24. But we agree with Patent Owner that Petitioner's contentions do not sufficiently or clearly explain how Behbahani teaches comparing the strength of the desired signal to the strength of the interferer signal. Rather, Petitioner focuses on the determination or measurement of the signal strength, as well as arguments relating to *how* the signal strength is measured. *E.g.*, Reply 23–27. Even if Behbahani teaches the same process for determining signal strengths as described in the '202 patent, this does not inform whether Behbahani teaches

"comparing the strength of the desired signal to the strength of the interfere signal," as recited in claim 1.

We also disagree with Petitioner that "Dr. Abidi provided well-reasoned analysis that Behbahani teaches determining and comparing desired and interferer signal strengths." Reply 27 (citing Ex. 1003 ¶¶ 179–181). We have reviewed the Dr. Abidi's testimony cited in the Petition and Reply for limitation 1(a) (Ex. 1003 ¶¶ 95, 96, 113–120, 179–181; Ex. 1042 ¶¶ 12–16), and we disagree that Dr. Abidi provided well-reasoned analysis that Behbahani teaches comparing desired signal strengths with interferer signal strengths. Rather, Dr. Abidi's testimony focuses on determining or measuring desired and interferer signal strengths, generally simply repeats what is in the Petition, and only provides a conclusory assertion that Behbahani expressly teaches comparing the strengths of the desired and interferer signals without providing any explanation. *See TQ Delta, LLC v. Cisco Sys., Inc.*, 942 F.3d 1352, 1358–59 (Fed. Cir. 2019) ("Conclusory expert testimony does not qualify as substantial evidence."). Accordingly, Dr. Abidi's supporting testimony is also deficient. *See* 37 C.F.R. § 42.65(a) ("Expert testimony that does not disclose the underlying facts or data on which the opinion is based is entitled to little or no weight."). As Patent Owner points out, the only comparison mentioned by Petitioner in Behbahani is to derive the strength of the interferer signal. Sur-reply 22 (citing Pet. 38–39); Ex. 1004, 1207 ("[B]y comparing the signal level at the input and the output of the digital filter (D_I and D_O), the relative strength of the out-of-channel signal that passes through the analog filter is calculated").

Accordingly, for the foregoing reasons we determine that Petitioner has *not* shown that Behbahani teaches limitation 1(a).

c) Limitation 1(b)

Limitation 1(b) recites "dynamically adjusting at least one of an impedance, a bias or a gain of at least one of the amplifier, filter or mixer in the receiver signal path, *responsive to the comparing*." Ex. 1001, 13:17–19 (emphasis added). Because Petitioner has not shown that Behbahani teaches the comparing recited in limitation 1(a), it follows that Petitioner has also *not shown* that Behbahani teaches actions taken that are *responsive to the comparing*.

Nonetheless, we address the remaining elements in limitation 1(b) for completeness. As described above, independent claims 6, 7, 11–14, 16, 18, 19, and 22 recite slightly different language regarding the adjusting, decreasing, or increasing of an impedance, a bias, or a gain of one or more of the plurality of circuits, or one or more of the amplifier, filter or mixer in the signal path of the receiver or the receiver signal path. The parties address these limitations as a group, and we will do the same. To the extent our analysis differs depending on the claim language, we will identify that in our analysis.

(1) Petitioner's Contentions

Petitioner contends that Behbahani, Leete, and Tan teach this limitation. Pet. 41–53. Petitioner contends that when Behbahani's "system switches from its high-power filter to its low-power filter, it increases the 'opposition to the flow of alternating current' (i.e., impedance) in the analog signal path, and in a reduced current that carries the AC signal through a load (i.e., through the filter load). This switch to a low-power filter also reduces the DC bias current applied to the filter stage." *Id.* at 42. Petitioner states that "Behbahani's dynamic DR process . . . satisfies all the limitations

[in the challenged claims] requiring dynamically adjusting a signal path impedance, a DC bias current, or any combination thereof." *Id.*

In support, Petitioner contends that in a January 2003 article co-authored by the inventor of the '202 patent ("the Tsividis article"),[10] Behbahani's "scaled filter approach [was identified] as an example of how one might dynamically adjust impedance, and the related bias current, in the signal path to respond to changing signal strengths." Pet. 43; *see also id.* at 44–46. Petitioner also contends that a person of ordinary skill in the art "would understand that switching back—from the high-power filter to the low-power filter—when conditions improve is one means through which Behbahani's system saves power during periods of better than worst-case conditions." *Id.* at 47 (referring to Ex. 1004, Fig. 4(b); citing Ex. 1003 ¶¶ 129–132). Petitioner contends that Tan "provides additional details about the scaled filters discussed in Behbahani, and these additional details confirm that transitioning from the high-power to low-power filter increases signal path impedance and reduces bias current." *Id.* at 48–50.

Petitioner asserts that Behbahani's "low-power filter has higher resistance . . . , lower capacitance, and lower bias current than its high-power filter" which is "precisely the arrangement disclosed in the '202 Patent and Dr. Tsividis' January 2003 paper." Pet. 50 (citing Ex. 1001, Fig. 6, 7:49–8:5; Ex. 1011, 70; Ex. 1003 ¶ 147). Therefore, Petitioner argues, a person of

[10] Tsividis et al., *Internally Varying Analog Circuits Minimize Power Dissipation, Significant Power Dissipation Savings Can Be Obtained by Allowing the Internal Circuit Attributes to Vary Dynamically As Needed for the Task At Hand*, IEEE Circuits & Devices Magazine, 63–72 (January 2003) (Ex. 1011).

ordinary skill in the art "would have understood that . . . switching from Behbahani's high-power filter to its low-power filter changes (increases) an impedance and changes (reduces) the bias current of a component (i.e., the filter) in the signal path." *Id.* at 50–51 (citing Ex. 1003 ¶ 147). Petitioner further argues that Behbahani teaches that when worst-case conditions are experienced, Behbahani's "switched DR process uses the high-power filter to expand the DR and accommodate a low desired signal and high interferers," and "when signal strength measurements indicate better than worst-case conditions, Behbahani's system switches in the low-power filter, saving power, and implements the sliding DR process to track the desired signal strength." *Id.* at 52–53 (citing Ex. 1004, 1206; Ex. 1003 ¶¶ 153–157).

Therefore, Petitioner argues that "switching from the high-power filter to low-power filter is based on signal strength measurements of the desired and interferer signal strengths taken at multiple points in the receiver signal path of the wireless transceiver." Pet. 53 (citing Ex. 1003 ¶¶ 157–158).

(2) Patent Owner's Contentions

Patent Owner argues that Petitioner has failed to show that Behbahani, alone or in combination with Tan, "disclose or render obvious . . . dynamically adjusting 'an impedance'—or 'a bias current'—of a circuit that is 'in the receiver signal path,' as required by each independent challenged claim." PO Resp. 44.

Patent Owner argues that the plain language of the claims "does not comport with switching out one circuit for another, without changing a bias current or an impedance of either, by re-routing the signal path." PO Resp. 49–50. Patent Owner contends that "[t]he 'plurality of circuits in the receiver signal path' in each claim includes '***an*** amplifier,' '***a*** mixer,' or '***a***

filter.'" *Id.* at 49. According to Patent Owner, the "claims are directed to dynamic changes of, e.g., 'an' individual impedance or bias current of an individual circuit that is, and remains 'in the signal path' for the adjustment," "not the overall impedance or overall DC bias of multiple components grouped together." *Id.* at 50; *see also id.* at 51–52.

Patent Owner argues that Behbahani's "filter swap" does not teach this limitation because "[n]o impedance or bias current—of either filter—changes or is adjusted by that swap." PO Resp. 52; *see also id.* (arguing that in Behbahani "one filter is taken completely out of operation to be replaced by another"). Patent Owner contends that Behbahani's "filter swap" is a change effected by re-routing the signal path rather than varying something in the signal path. *Id.* at 52; *see also id.* at 53(arguing that "the parameters of each filter are not changed"), 53–54 (arguing that Behbahani "re-rout[es] the signal path among static circuits"), 55 (arguing that the parameters of each filter are static), 59 (arguing that re-routing the signal path changes the overall impedance of the receiver, but not dynamically changing an impedance of a circuit that is in the signal path). Patent Owner argues that a person of ordinary skill in the art "would know that Behbahani's 'substitution' of filter circuit blocks involves changing the signal path—to remove the first circuit block from the path, turning it off to save power, and instead turning on and sending the signal through the second circuit block." *Id.* at 55–56 (citing Ex. 2020 ¶ 58).

Patent Owner provides annotated Figure 4 of Behbahani, showing the filter swap:

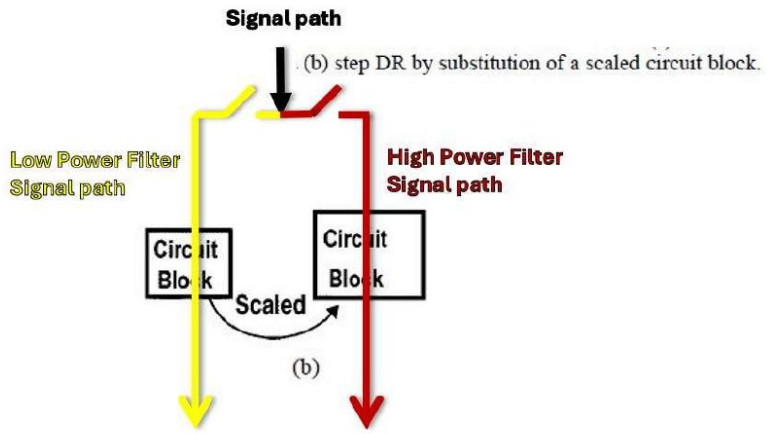

PO Resp. 56. Patent Owner's annotated Figure 4 adds a black arrow pointing downward indicating "Signal path," with two branches below, a yellow arrow indicating "Low Power Filter Signal path" on the left and a red arrow indicating "High Power Filter Signal path" on the right. Patent Owner also provides annotated Figure 9 of Behbahani, showing the circuitry for the filter swap:

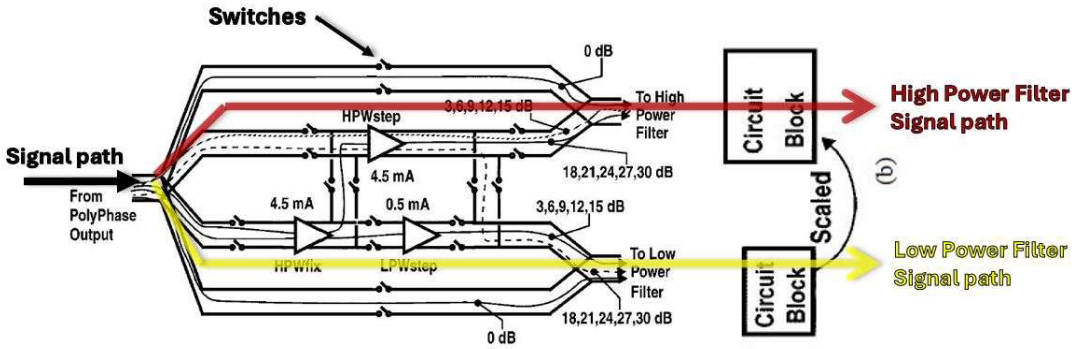

Id. at 57. Patent Owner's annotated Figure 9 adds a black arrow on the left side indicating "signal path," with two branches coming out on the right

side, a red arrow indicating "High Power Filter Signal path" on the top, and a yellow arrow indicating "Low Power Filter Signal path" on the bottom.

Patent Owner contends that "drawing a larger box around more of the receiver block diagram does not change the underlying circuits or their operation." PO Resp. 58. Patent Owner argues that "[a] change to the overall impedance of the receiver, or of a section of the receiver chain containing multiple circuit blocks—that results only from re-routing the signal path—is not dynamically changing 'an impedance,' of a circuit that is '***in*** the signal path' as used in claims." *Id.* at 59 (citing Ex. 2020 ¶¶ 75, 82, 83). Patent Owner also provides annotated Figure 16 from Tan, showing the signal path, which will be discussed further below. *Id.* at 59. Patent Owner argues "[s]witching operation from one static filter to another is a different, and inferior, approach–versus dynamically changing the components or structure of a single filter block in the signal path in operation." *Id.* at 60 (citing Ex. 2020 ¶¶ 77–80; Ex. 1011, 8–9).

Patent Owner also argues that Petitioner improperly relies on the Tsividis article, which does not define the scope of the claims, and "completely misconstrues, and ignores contrary portions of" the Tsividis article. PO Resp. 60–61. According to Patent Owner, the Tsividis article "***teaches improvements on*** Behbahani's approach—specifically relevant here is ***dynamic*** scaling of a ***single filter's structure via individual elements***." *Id.* at 61 (citing Ex. 1011, 8; Ex. 2020 ¶¶ 66–74). Patent Owner contends that the Tsividis article "refers to ***dynamic*** impedance scaling only with reference to its own Figure 12—which shows a single RC circuit, adjusted via switching individual elements." *Id.* (citing Ex. 1011, 9, Fig. 12). Patent Owner further argues that the Tsividis article teaches away from

Behbahani's approach and "towards 'vary[ing] structure dynamically' in a single filter and using 'individual filter elements rather than entire filters.'" *Id.* at 61 (quoting Ex. 1011, 8, 9, Fig. 12; Ex. 2020 ¶¶ 66–74).

Patent Owner contends that separately from the Tsividis article, which was published in January 2003, Professor Tsividis was developing techniques for dynamically varying circuit structure via adjusting internal components. PO Resp. 62. According to Patent Owner, this development resulted in provisional patent applications, and the related '330 patent, which issued on February 23, 2004. *Id.* at 62–63. Patent Owner argues that Behbahani, Tan, and the Tsividis article were cited in the '330 patent and the '202 patent. *Id.* at 63 (citing Ex. 1002, 65; Ex. 2019, 62).

(3) Analysis

There is no dispute as to what Behbahani teaches or how Behbahani operates. The parties agree that Behbahani teaches a variable bandpass filter that switches from a high-power filter to a low-power filter. *See, e.g.*, Pet. 13, 42; PO Resp. 3, 51–52. The dispute is whether Behbahani's "filter swap" functionality "dynamically adjust[s] at least one of an impedance, a bias or a gain of at least one of the amplifier, filter or mixer in the receiver signal path," as recited in claim 1, "dynamically increas[es] an impedance of at least one of the amplifier, filter or mixer in the signal path of the receiver," as recited in claim 6, "dynamically adjust[s] one or more of an impedance, a bias or a gain of one or more of the plurality of circuits in the signal path," as recited in claim 7, "caus[es] a bias current of one or more of the plurality of circuits in the receiver signal path of the wireless transceiver to be dynamically decreased," as recited in claim 11, "caus[es] an impedance of one or more of amplifier, filter or the mixer in the receiver signal path of

the wireless transceiver to be increased," as recited in claim 12, "caus[es] a bias current of one or more of the plurality of circuits in the receiver signal path of the wireless transceiver to be dynamically increased," as recited in claim 13, "dynamically adjust[s] at least one of an impedance, a bias current or a gain of one or more of the amplifier, filter or mixer in the signal path of the receiver," as recited in claim 14, "dynamically adjust[s] at least one of an impedance, a bias current or a gain of one or more of the amplifier, filter or mixer in the signal path of the receiver," as recited in claim 16, "dynamically adjust[s] an impedance of at least one of the plurality of circuits in the signal path," as recited in claim 18, "dynamically adjust[s] one or more of an impedance, a bias or a gain of one or more of the plurality of circuits in the receiver signal path," as recited in claim 19, and "dynamically increas[es] an impedance of one or more of the plurality of circuits in the signal path of the receiver," as recited in claim 22. Ex. 1001, 12:63–18:37.

We agree with Petitioner that Patent Owner's arguments rely on a narrower reading of the claim language than is supported by the record. *See* Reply 1–4; *see In re Hiniker Co.*, 150 F.3d 1362, 1369 (Fed. Cir. 1998) ("The invention disclosed . . . may be outstanding in its field, but the name of the game is the claim."). Patent Owner argues that Behbahani's approach is different from the approach claimed in the '202 patent. *See, e.g.*, PO Resp. 1–13; Sur-reply 1–13. We determine that the *claim language* does not exclude Behbahani's approach. Although Patent Owner argues that Dr. Larson "testified plainly and without rebuttal that a [person of ordinary skill in the art] would understand the challenged claims (and this distinction) this way," we have reviewed Dr. Larson's cited testimony, and disagree with

Patent Owner's assertions, as discussed further below. *See* Sur-reply 1 (citing Ex. 2020 ¶¶ 58, 62, 70, 71, 74–77, 85).

(a) Behbahani's Variable Bandpass Filter Block as "one or more of the plurality of circuits" or "filter"

As discussed above, Petitioner relies on Behbahani's Variable Bandpass Filter Block to teach the recited "filter," which, in some of the independent claims is also one of the recited "plurality of circuits." Pet. 29 (element 1(Pre)(a)).[11] Patent Owner argues the entire Variable Bandpass Filter Block "containing multiple filters, is not a single circuit block." Sur-reply 3 (citing, *e.g.*, Ex. 2020 ¶¶ 46–48, 71, 74, 76, 77, 79, 80, 82, 83); *see also id.* at 4, 13 (citing, *e.g.*, Ex. 2020 ¶¶ 46–48, 71, 74–83).

Under Patent Owner's theory, the low-pass and high-pass filters within the Variable Bandpass Filter Block are separate circuits where no adjustment or change to the impedance or bias of those distinct circuits occurs (i.e., they are static filters), whereas Petitioner contends that the Variable Bandpass Filter Block as a whole, which includes the low-pass and high-pass filters, teaches the "circuit" or "filter" and adjustments or changes to the impedance and/or bias of the Variable Bandpass Filter Block as a whole occurs.

---

[11] We disagree with Patent Owner's arguments in the Sur-reply that Petitioner's reliance on the Variable Bandpass Filter block is a new theory raised in the Reply. *See* Sur-reply 3, 11–12. Patent Owner's argument that the "Petition never identified the entire bandpass as the claimed 'circuit' or 'component'" is incorrect. *Id.* at 11. In the arguments for element 1(Pre(a)), the Petition states that Behbahani's "Variable BW Adaptive DR BPF satisfies the claimed 'filter'," which identifies the entire filter block as teaching the "filter" or one of the recited "plurality of circuits." Pet. 29; *see also* Ex. 1003 ¶ 93 (same).

Patent Owner's arguments generally fail to address why Behbahani's Variable Bandpass Filter Block does not teach the recited "plurality of circuits includ[ing] . . . a filter" or a "filter," and instead focus on why the low-pass and high-pass filter circuits do not teach the limitation, which is not Petitioner's position. As stated above, we agree with Patent Owner's plain reading of the claim language – i.e., that it "requires adjusting the impedance [or bias current] of a filter or other circuit, while it is in the signal path." *See* PO Resp. 49. However, Patent Owner's reading of the claim does not persuasively address why the Variable Bandpass Filter Block does not teach the recited "circuit" or "filter."

We have reviewed Dr. Larson's cited testimony and disagree with Patent Owner that he provided "a well-supported opinion . . . as to why a [person of ordinary skill in the art] ***would not*** understand the entire bandpass box to be a single 'circuit,' or to reflect variation in 'an impedance' or 'a bias' in the claims." Sur-reply 4 (citing Ex. 2020 ¶¶ 46–48, 71, 74–83).

Dr. Larson testifies that the '330 patent (which has the same specification as the '202 patent) "teach[es] these adjustments [that dynamically change operating parameters] as changes effected in a *single circuit block*." Ex. 2020 ¶ 46 (citing, e.g., Ex. 1001, Figs. 8A, 9A, 8:20–25, 8:36–39, 9:36–59, 10:1–18 (emphasis added)). Dr. Larson does not provide further explanation as to what he means by a "single circuit block," but relies on Figures 8A and 9A, which show a "function block," and other disclosures referring to a "function block." *Id.* There is no dispute that the recited "circuit" in the receiver signal path is referring to these "function blocks." *See* Tr. 22:20–23:4. The '202 patent states that Figure 8A, which includes function block 820, is "an embodiment of the present invention"

that describes a "possible power saving technique[]." Ex. 1001, 3:35–37, 8:25–27. Similarly, Figure 9A, which includes function block 920, "illustrate[s] one of the possible power saving techniques." *Id.* at 3:38–39. The '202 patent describes that "[f]unctional block 820 . . . may be *a filter*, mixer, amplifier, *or other circuit or circuits* in a wireless transceiver or other electronic circuits or system." Ex. 1001, 8:27–30 (emphasis added). Based on these disclosures, we are not convinced that Function Block 820 or 920 cannot include multiple filters in a Variable Bandpass Filter Block, or that Behbahani's Variable Bandpass Filter Block does not teach the recited "circuit" or "filter."

Dr. Larson also relies on Figure 6 of the '202 patent to conclude that "[t]he patents refer to adjustments in or to a single circuit." Ex. 2020 ¶ 46; *see also id.* at ¶ 47; PO Resp. 51–52. However, Figure 6 is described as "*an example* of how a circuit's impedances may be scaled to reduce drive currents." Ex. 1001, 3:29–30, 7:49–50 (emphasis added). Claims are not limited to specific embodiments described in the specification. *E.g.*, *SuperGuide Corp. v. DirecTV Enterprises, Inc.*, 358 F.3d 870, 875 (Fed Cir. 2004) (stating that "a particular embodiment appearing in the written description may not be read into a claim when the claim language is broader than the embodiment"). We find persuasive Petitioner's arguments that drivers 612 and 622 in Figure 6 may not be the same, and, therefore, do not support "adjusting individual resistors or capacitors ***to the exclusion*** of more comprehensive changes within a function block." Reply 9–11.

Patent Owner argues that the claims require adjustment of parameters within a "single circuit," a "single function block," or an "individual circuit," but does not explain why Behbahani's Variable Bandpass Filter

Block does not teach a "single circuit," "single function block," or "individual circuit." *E.g.*, PO Resp. 49–51, 54–55, 60; Sur-reply 11–14. Rather, Patent Owner's arguments are generally directed to the low-power and high-power filters in the Variable Bandpass Filter Block, which does not effectively rebut Petitioner's arguments. *E.g.*, PO Resp. 55–60. Although Patent Owner refers to Dr. Larson's testimony "about why the bandpass would not be understood as a single circuit, component, or impedance in the signal path," (Sur-reply 12) it is not entirely clear what testimony Patent Owner is referring to. Dr. Larson testifies that "the teachings and challenged claim language of the Tsividis Patents would be understood by a person of ordinary skill in the art to be referring to impedance and bias current adjustments made dynamically for a single function block, such as a filter—in other words, adjustments to an impedance or a bias current in or for a particular circuit." Ex. 2020 ¶ 77. But this, too, does not explain why Behbahani's Variable Bandpass Filter Block does not teach the recited "circuit" or filter or why the Variable Bandpass Filter Block is not a single function block. Therefore, we are persuaded that Petitioner has shown that Behbahani's Variable Bandpass Filter Block teaches the recited "circuit" or filter.

(b) Changing Internal Components or Structure

Patent Owner and Dr. Larson also argue limitations not recited in the claims relating to the change, adjustment, or variance in the one or more plurality of circuits or the filter. For example, Patent Owner's argument that Behbahani's switching from one filter to another is different from "dynamically *changing the components or structure* of a single filter block

in operation" is not commensurate with the claim language, which is broader. *See* PO Resp. 60 (emphasis added); *see also id.* at 62.

Similarly, Dr. Larson's testimony that "a person of ordinary skill in the art would readily understand this claim language to be referring to dynamic adjustments made to a parameter (*e.g.*, 'an impedance' or 'a bias current' or gain) of a circuit 'in the signal path,' *via the internal components or structure of one circuit block*" is also not commensurate with the claim language, which does not recite adjustments made "via the internal components or structure of one circuit block." *See* Ex. 2020 ¶ 48 (emphasis added). Dr. Larson provides similar unpersuasive testimony in paragraph 70 (stating that "dynamic impedance scaling" "a single circuit by *varying its internal structure*—was different from, and a potential improvement upon, the hard switch between two completely separate filters as disclosed in Behbahani") and paragraph 72 (comparing "adjusting *the internal structure or components of a single filter* or other circuit block," as compared to Behbahani's "swap of a completely different filter circuit block into the signal path"). Ex. 2020 ¶¶ 70, 72 (emphasis added).

The parties both rely on the Tsividis article—Petitioner to support that Behbahani's approach is captured by the scope of the claims, and Patent Owner to argue the opposite. Pet. 43–46; PO Resp. 60–64. We agree with Patent Owner that the Tsividis article is extrinsic evidence and is "***not*** a determiner of the scope" of the claims. PO Resp. 60; Sur-reply 18. Nonetheless, we address the parties' arguments regarding the Tsividis article.

The Tsividis article "review[s] several recently proposed techniques" to "allow the *internal* attributes of the circuit to vary." Ex. 1011, 63. As one

example, Tsividis article describes techniques for "dynamic impedance scaling," including Behbahani's technique of "us[ing] two filters, designed with different capacitance values, and place one or the other in service as required [34], turning the other filter off."[12] Ex. 1011, 70. However, the Tsividis article explains that this approach "causes transients at the output" so "the result may be loss of data." *Id.* The Tsividis article proposes an approach shown in Figure 11 to prevent the output transients. *Id.* The Tsividis article also proposes an approach for "dynamic impedance scaling" shown in Figure 12, described as "switching individual filter elements rather than entire filters." *Id.*

The Tsividis article also describes a technique for "dynamic structure variation," i.e. "to dynamically vary the very structure of the circuit (e.g., change the architecture of a filter dynamically)". Ex. 1011, 71. The Tsividis article states:

> A straightforward way to accomplish this is to use two or more filters with different structures and make sure that output transients are avoided using the technique in Figure 11. ***It may also be possible to use a single filter and vary its structure dynamically, using techniques related to the ones discussed. This approach has not been investigated to any extent yet.***

Ex. 1011, 71–72 (emphasis added).

Dr. Larson testifies that the approach shown in Figure 12 of the Tsividis article is an example of what is claimed in the '202 patent, whereas the approach shown in Figure 11 is similar to the approach in Behbahani, which swaps the filters. Ex. 2020 ¶¶ 67, 71. That is, Patent Owner argues that Figure 12 shows dynamically adjusting a filter's internal structure. Ex.

[12] [34] referenced in this statement is the Behbahani reference.

2020 ¶¶ 69, 70. As discussed above, the claims do not recite adjusting the structure of a circuit or filter. Nonetheless, we are persuaded by Petitioner's arguments that Figure 12 does not show dynamically adjusting the structure of the circuit. *See* Reply 22–23. Further, the Tsividis article states that the approach of varying the structure of a *single filter* dynamically "has not been investigated to any extent yet," which also tends to support that this is not shown in Figure 12. Ex. 1011, 72. Finally, even if the disclosure of Figure 12 is captured by the claim language, this does not mean that Behbahani's approach is excluded. *E.g.*, Reply 16. Figure 11 is referenced in the section of the Tsividis article titled "dynamic structure variation," but Figure 12 is not—it is referenced in the "dynamic impedance scaling" section. Dr. Larson testifies that Figure 11 is similar to Behbahani's approach, and that approach *is* mentioned in the "dynamic structure variation" section of the Tsividis article, which implies that Behbahani's approach supports the "dynamic structure variation" that Patent Owner contends is recited in the claims of the '202 patent. Moreover, as discussed above, our focus is on the language of the claims, which are broader than Patent Owner's arguments. Finally, we do not agree with Patent Owner's argument that the Tsividis article teaches away from Behbahani's approach for the reasons set forth by Petitioner. *See* Reply 18–22.

(c) In the Receiver Signal Path, In the Signal Path, In the Signal Path of the Receiver

Each of the independent claims recites the adjustment of the impedance or bias current of the circuit or filter "in the receiver signal path," "in the signal path," or "in the signal path of the receiver." The parties treat these limitations as having the same meaning, as do we. We are persuaded

that Petitioner has shown that Behbahani's Variable Bandpass Filter Block is in the receiver signal path, and also persuaded that Petitioner has shown that the bias current and impedance is dynamically adjusted, increased, or decreased, as recited in each of the independent claims.

Petitioner provides an annotated version of Behbahani's Figure 2 as modified by Leete, showing the receiver signal path in red:

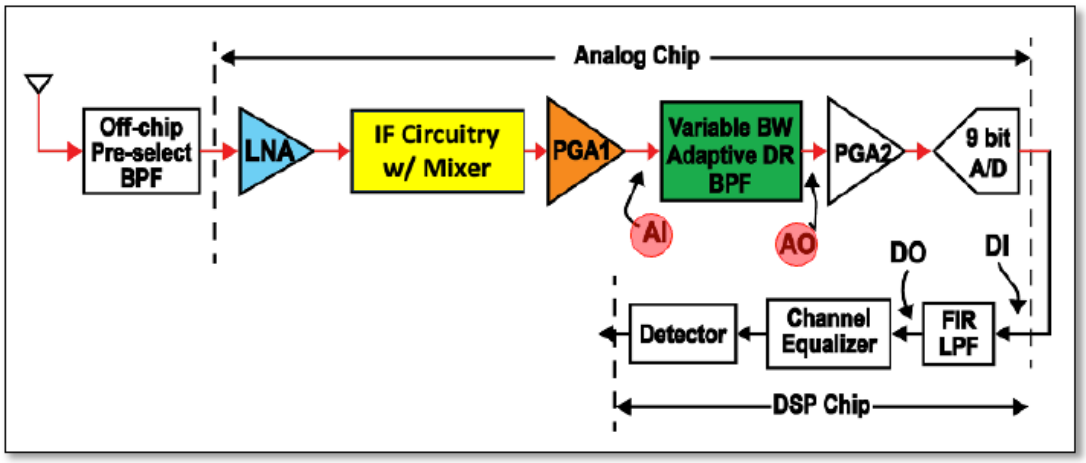

Pet. 27; *see also id.* at 35 (limitation 1(a), same, describing nodes A_I and A_O on the analog signal path, and nodes D_I and D_O on the digital signal path); *e.g.*, Ex. 1003 ¶ 113. Petitioner's annotated Figure 2 of Behbahani replaces the "Image Reject Downconverter" box with the LNA and other IF circuitry, including the mixer stage, as shown in Leete's Figure 1, and highlights red arrows showing the receiver signal path from left to right, and nodes A_I and A_O on the analog signal path on either side of the Variable Bandpass Filter Block. Pet. 27. As shown, the receiver signal path goes in the left side of the Variable Bandpass Filter Block and out on the right side.

We are not persuaded that "substitution" of filter circuit blocks (i.e., switching between filters) involves changing the signal path, as Patent Owner argues. PO Resp. 55–56; Sur-reply 14; *see* Ex. 2020 ¶ 58. Rather, as

shown in Petitioner's annotated Figure 2, the signal path goes into one side of the Variable Bandpass Filter Block and out the other side. This is the signal path. We are not persuaded that different routing *within* the Variable Bandpass Filter Block "changes" or "re-routes" the signal path.

Patent Owner's annotated Figures 4 and 9 do not show the receiver signal path out of Variable Bandpass Filter Block, but rather show only the signal path in (in black) and the path inside the Variable Bandpass Filter Block. *See* PO Resp. 56–57. The signal path is not "re-routed" or "changed," as Patent Owner argues – it just chooses which filter to put into operation and follows that signal path. To that end, many of Patent Owner's arguments regarding "re-routing" or "changing" the signal path incorrectly assume that the low power filter and high power filter are the recited "circuit," which is not Petitioner's position, and are therefore not persuasive. Similarly, Dr. Larson's testimony largely makes the same assumption, so is not persuasive. E.g., Ex. 2020 ¶¶ 67, 75, 76.

We find persuasive Dr. Abidi's testimony that the signal enters the variable BPF block, traverses one of the two LPF branches, and then pass through the HPF. *See* Reply 6–7 (citing Ex. 1042 ¶¶ 4–6). This is shown in Petitioner's annotated Figure 2 of Behbahani:

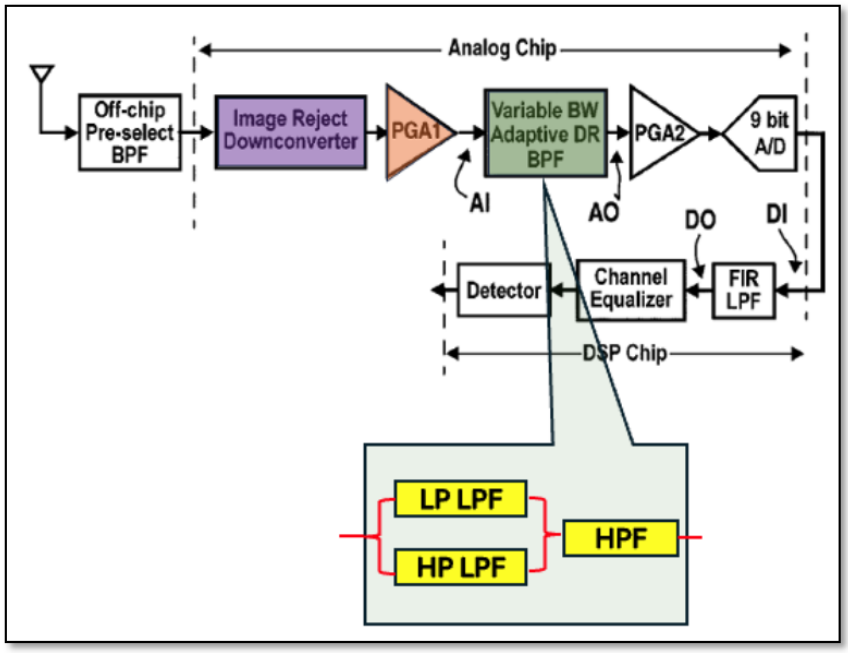

Reply 7, 14; Ex. 1042 ¶ 5. Petitioner's annotated Figure 2 shows a blow out of the Variable Bandpass Filter Block, with signal path in red going into alternating branches of either LP LPF or HP LPF, and outputting into HPF. This is consistent with Patent Owner's annotated Figure 16 of Tan, reproduced below.

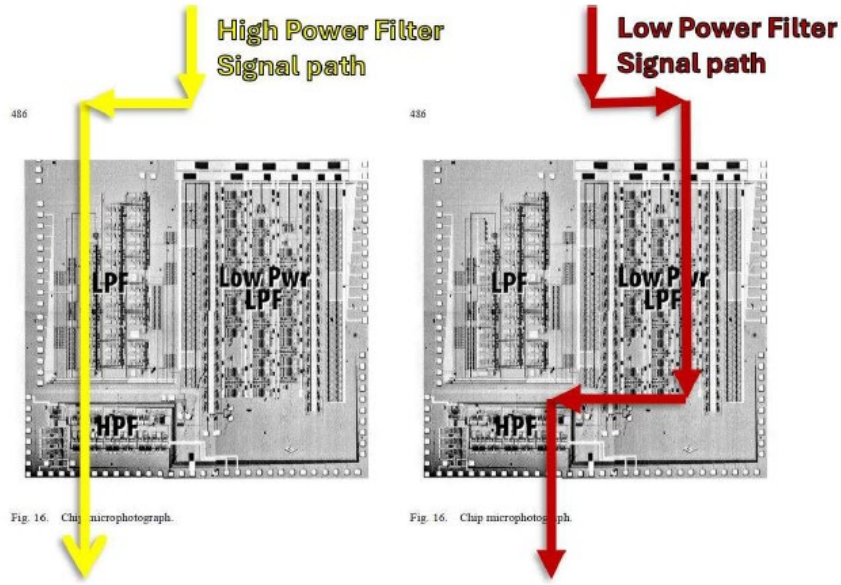

PO Resp. 59. Patent Owner provides two annotations of Tan's Figure 16. On the left, Patent Owner highlights in yellow the "High Power Filter Signal path" which goes through LPF and then through HPF. On the right, Patent Owner highlights in red the "Low Power Filter Signal Path" which goes through Low Pwr LPF and then through HPF. In other words, Patent Owner's annotated Figure 16 also reflects that the signal ultimately flows through the same HPF within and out of the overall Variable Bandpass Filter block. *See* PO Resp. 59; Ex. 2020 ¶ 82; Ex. 1042 ¶ 6; *see also e.g.*, Ex. 2020 ¶ 67 (annotated Figure 11 of Ex. 1011); Reply 7–8. We fail to see why this disclosure is not "in the receiver signal path," "in the signal path," or "in the signal path of the receiver."

We also determine that Petitioner has established that Behbahani's switching between the high-power filter and low-power filter increases the impedance and reduces the DC bias current in the Variable Bandpass Filter Block. *See* Pet. 41–42, 46–51 (citing, *e.g.*, Ex. 1003 ¶¶ 129–147). Dr. Abidi provides persuasive testimony explaining why a person of ordinary skill in the art "would have understood consistent with the '202 Patent and Dr. Tsividis's 2003 paper, that Tan's teachings confirm switching from Behbahani's high-power filter to its low-power filter increases signal path impedance and reduces the bias current of a component (i.e., the filter) in the signal path." Ex. 1003 ¶ 147 (emphasis added); *see id.* ¶¶ 127–146; Pet. 46–51.

Patent Owner argues that "no portion of the entire bandpass changes impedance or bias while it is 'in the signal path.'" Sur-reply 13 (citing Ex. 2020 ¶¶ 81–83); *see also id.* at 14 (citing Ex. 2020 ¶¶ 73–80). Similarly, Patent Owner also contends that, even drawing a larger box (i.e., including

Behbahani's Variable Bandpass Filter), "does not change the underlying circuits or their operation" because Behbahani's Variable Bandpass Filter Block "does not have any individual filter circuit impedance 'in the receiver signal path' that changes dynamically during operation." PO Resp. 58–59 (citing Ex. 2020 ¶ 82); *see also* Ex. 2020 ¶¶ 83–85. However, these arguments improperly focus on the low-power filter and high-power filters individually, which is not consistent with Petitioner's contentions. Additionally, Patent Owner's argument, and Dr. Larson's supporting testimony, is based on the underlying theory that the receiver signal path is re-routed or changed, and we disagree with that argument, as discussed above.

Patent Owner also argues that Dr. Abidi's testimony in paragraph 135 "only opines that *Behbahani*'s swap of filters increases 'signal path impedance'—he ***does not*** say that this is the dynamic adjustment of '***an*** impedance' of a circuit '***in*** the signal path.'" PO Resp. 53. We do not find this argument persuasive. As quoted previously, Dr. Abidi testifies that "Tan's teachings confirm switching from Behbahani's high-power filter to its low-power filter ***increases signal path impedance and reduces the bias current of a component (i.e., the filter) in the signal path***." Ex. 1003 ¶ 147. Dr. Abidi identifies that the increase in signal path impedance and reduction of the bias current is of a component—i.e., the Variable Bandpass Filter Block.

(d) Conclusion for Limitation 1(b)

As discussed above, limitation 1(b) does not specify any particular structure or manner for adjusting the impedance or bias in the circuit. We determine that, under the plain and ordinary meaning of the claim language,

nothing precludes adjusting the bias current and impedance in a circuit or filter (i.e., a variable bandpass filter) by swapping out a high-pass or low-pass filter in a variable bandpass filter, as taught by Behbahani. However, because we determine that Petitioner has not shown that Behbahani teaches the comparing recited in limitation 1(a), it follows that Petitioner has also *not shown* that Behbahani teaches actions taken that are *responsive to the comparing*, as recited in limitation 1(b). Accordingly, we determine that Petitioner has not shown that the combination of Behbahani, Leete, and Tan teaches limitation 1(b) and the corresponding limitations in the other independent claims.

(4) Previous IPRs

Patent Owner argues that Petitioner's contentions as to Behbahani are similar to those rejected at the institution stage in IPR2023-00694. PO Resp. 30–33. We disagree. In IPR2023-00694, Lenovo and Motorola challenged claims in the related '330 patent, primarily based on the Rauhala reference. *Id.*; Ex. 2007 (institution decision).[13] There, the Board determined that Petitioner had not sufficiently shown that the impedance of a component *in the signal path* was changed[14] because Petitioner relied upon a change in resistance in a control circuit 72 that was outside of the signal path through linear unit 71 (i.e., the mixer). IPR2023-00694, Paper 10, 19–20. On rehearing, the Board reiterated that Rauhala identified control circuit 72

[13] Exhibit 2007, which is purportedly the decision denying institution in IPR2023-00694, lacks the headers and footers, including page numbers, of the paper filed in the docket. We cite to the page numbers as reflected in Paper 10 of IPR2023-00694.

[14] The claim language at issue in the '330 patent is "dynamically changing an impedance of a component in the signal path."

separately from mixer 71, and Figures 1, 2, and 7 show the mixer's input and output, which is separate from the control circuit. IPR2023-00694, Paper 14, 6–11; Ex. 2008.[15] For example, the Board relied on the following annotated diagram of Rauhala's Figure 7:

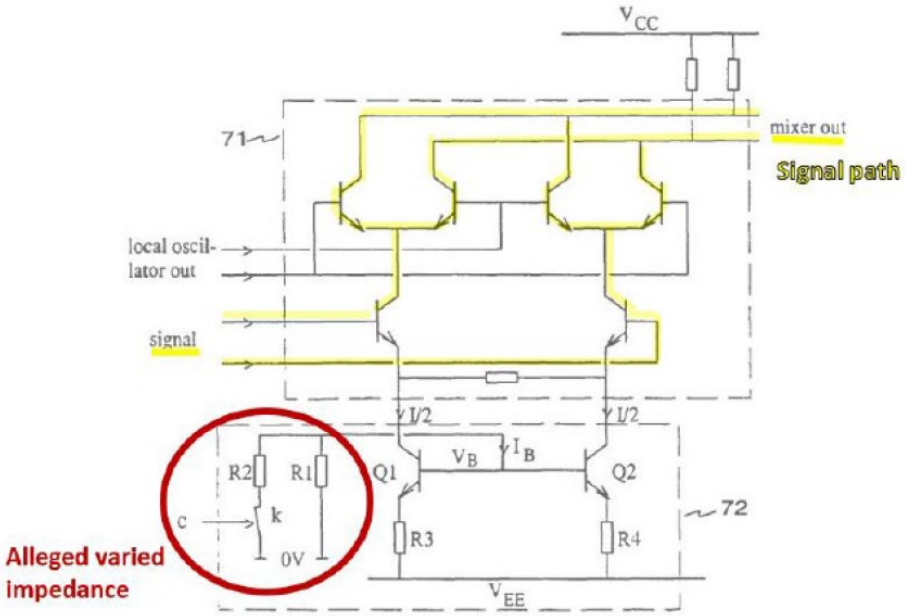

Fig. 7

IPR2023-00694, Paper 14, 9. Annotated Figure 7 shows a dotted line box around mixer 71 with yellow highlighting showing the signal path, and below it, a dotted line box around control circuit 72 with a red circle around a portion of the circuitry stating "Alleged varied impedance."

As shown, in that proceeding, both the petitioner's contentions and Rauhala's circuitry are different than Petitioner's contentions here and the

[15] Exhibit 2008, which is purportedly the decision denying rehearing in IPR2023-00694, lacks the headers and footers, including page numbers, of the paper filed in the docket. We cite to the page numbers as reflected in Paper 14 of IPR2023-00694.

disclosure in Behbahani, where Petitioner relies on the Variable Bandpass Filter Block. We also note that, on rehearing, the Board distinguished the claim language in the ’202 patent from the claim language in the ’303 patent. IPR2023-00694, Paper 14, 14–15. For example, claim 11 of the ’202 patent recites “causing a bias current of one or more of the plurality of circuits in the receiver signal path of the wireless transceiver to be dynamically decreased,” which the panel found Petitioner had sufficiently established was disclosed by Rauhala for purposes of institution in IPR2023-00698, unlike the claims that required changing an impedance of circuits in the receiver signal path. *Id.* at 14–15; IPR2023-00698, Paper 10; Ex. 2022. The Board ultimately found that Petitioner had not established unpatentability of the challenged claims in the ’202 patent because Petitioner had not shown that Rauhala’s detector DET disclosed determining the signal strength of the desired signal and determining the signal strength of the interferer signal that is part of the *same* received wireless signal, i.e., limitation 1(a). *See* IPR2023-00698, Paper 32. In that case, Petitioner acknowledged that the detector DET provided either the received channel strength or the neighboring channel signal strength, but did not argue that Rauhala’s detector DET receives both at the same time. *Id.* at 18–26. Therefore, the Board determined that the petitioner had not shown that the challenged claims were anticipated by Rauhala. *Id.* at 27.

d) Conclusion for Independent Claim 1

Therefore, we determine that, on this record, Petitioner has *not* shown by a preponderance of the evidence that independent claim 1 would have been obvious over the combination of Behbahani, Leete, and Tan.

5. Claims 6, 7, 11–14, 16, 18, 19, and 22

Petitioner also argues that independent claims 6, 7, 11–14, 16, 18, 19, and 22 and dependent claims 2, 4, 5, 8–10, 15, 17, 20, 21, and 23 are obvious over Behbahani, Leete, and Tan. Pet. 53–72. Petitioner essentially relies on the same arguments as set forth above for independent claim 1, and provides additional argument and evidence where necessary. *Id.* Patent Owner does not separately challenge Petitioner's contentions as to these claims, other than as argued above. *See generally* PO Resp.

Independent claims 6, 7, 11–14, 16, 18, 19, and 22 recite similar limitations to limitations 1(a) and 1(b) discussed above. For example, claim 6 also recites "comparing the strength of the desired signal to the strength of the interferer signal." Ex. 1001, 13:50–51. Claims 7, 11, 12, 13, 14, 16, and 18 recite "comparing the strength of the desired signal relative to the strength of the interferer signal." Ex. 1001, 14:7–8, 14:43–44, 14:66–67, 15:20–21, 15:48–49, 16:24–25, 17:2–3. Claim 19 recites "comparing the desired signal strength to the interferer signal strength to determine an operating signal condition of the receiver." Ex. 1001, 17:29–31. Claim 22 recites "comparing the desired signal strength to the interferer signal strength." Ex. 1001, 18:27-28. Independent claims 7, 11, 12, 14, 16, 19, and 22 also recite performing some action, i.e., dynamically adjusting, increasing, decreasing, determining an operating signal condition, etc., based on or responsive to the comparison, similar to the recitation in limitation 1(b). *Id.* at 14:9, 14:45, 15:1, 15:50, 16:26, 17:33, 18:31.

Therefore, for the same reasons as for claim 1, Petitioner has *not* shown by a preponderance of the evidence that claims 6, 7, 11–14, 16, 18, 19, and 22 are obvious over Behbahani, Leete, and Tan. And for the same

reasons, dependent claims 2, 4, 5, 8–10, 15, 17, 20, 21, and 23 have also *not* been shown to be nonobvious. *See In re Fritch*, 972 F.2d 1260, 1266 (Fed. Cir. 1992) ("[D]ependent claims are nonobvious if the independent claims from which they depend are nonobvious.").

V. PATENT OWNER'S ARGUMENT THAT THE PROCEEDING SHOULD BE DE-INSTITUTED AND DISMISSED

Patent Owner also argues that this *inter partes* review proceeding should not have been instituted because it is "an admitted follow-on challenge, to long-settled (indeed now expired) foundational patents—using art that was put before the Examiner for consideration decades ago." Sur-reply 8; *see id.* at 24–25. Patent Owner argues that "[d]e-institution and dismissal of these proceedings would serve justice and fairness, [Patent Owner's] settled expectations in long-standing patent rights, and Office policies and efficiency." *Id.* at 9; *see id.* at 25–26. Patent Owner's arguments essentially reassert the arguments made in the Preliminary Response that *inter partes* review should be discretionarily denied under 35 U.S.C. § 314(a) and 35 U.S.C. § 325(d). In the Institution Decision, we were not persuaded by these arguments. Inst. Dec. 15–22.

Patent Owner argues that in *Ecto World, LLC v. RAI Strategic Holdings, Inc.*, IPR2024-01280, Paper 13 (PTAB May 19, 2025) (§ A precedential) supports denial under 35 U.S.C. § 325(d). Sur-reply 25. However, *Ecto World* was designated precedential on May 19, 2025, and our Standard Operating Procedure 2 provides that "[a] precedential decision is binding Board authority in ***subsequent matters*** involving similar facts or issues." SOP2, 7 (emphasis added). Therefore, re-evaluation under *Ecto World* does not appear to be appropriate under the circumstances here.

Patent Owner also argues that proceedings can be properly dismissed post-institution in the Director's discretion. Sur-reply 26. In support, Patent Owner cites to *Hulu LLV v. Piranha Media Distribution, LLC*, IPR2024-01252, Paper 17, at 3 (PTAB April 17, 2025). *Id.* However, in *Hulu*, the patent owner timely sought Director Review after the institution decision, and upon Director Review, the institution decision was vacated and denied. IPR2024-01252, Papers 16, 19, 27. By contrast, here, Patent Owner raised this issue for the first time in the Sur-reply (filed August 5, 2025, nearly three months after *Ecto Worl*d was designated precedential), approximately three weeks prior to oral argument. Patent Owner also did not file a motion to terminate the proceeding.

Although we recognize that "that the Board has the inherent authority to reconsider institution decisions (beyond the regulatory time for a patentee's entitlement to seek reconsideration)," *Sling TV, L.L.C. v. Realtime Adaptive Streaming LLC*, 840 F. App'x 598, 598–99 (Fed. Cir. 2021), we decline to do so at this late stage in the proceeding.

VI. CONCLUSION

For the foregoing reasons, we are *not* persuaded that Petitioner has established by a preponderance of the evidence that claims 1, 2, and 4–23 of the '202 patent are unpatentable.

In summary:

Claims	35 U.S.C. §	Reference/Basis	Claims Shown Unpatentable	Claims Not Shown Unpatentable
1–8	103	Behbahani, Leete, Tan		1, 2, 4–23

VII. ORDER

In consideration of the foregoing, it is hereby:

ORDERED that claims 1, 2, and 4–23 of the ’202 patent have *not* been shown to be unpatentable; and

FURTHER ORDERED that Patent Owner’s Motion to Strike (Paper 22) is *denied*; and

FURTHER ORDERED that, because this is a final written decision, parties to this proceeding seeking judicial review of our Decision must comply with the notice and service requirements of 37 C.F.R. § 90.2.

IPR2024-00818
Patent 10,524,202 B2

For PETITIONER:

Paul R. Hart
Adam P. Seitz
ERISE IP, P.A.
paul.hart@eriseip.com
adam.seitz@eriseip.com

For PATENT OWNER:

Aaron R. Hand
Corey Johanningmeier
BUNSOW DE MORY LLP
ahand@bdiplaw.com
cjohanningmeier@bdiplaw.com