IEEE SOLID-STATE CIRCUITS MAGAZINE

FALL 2014 • VOL. 6 • NO. 4

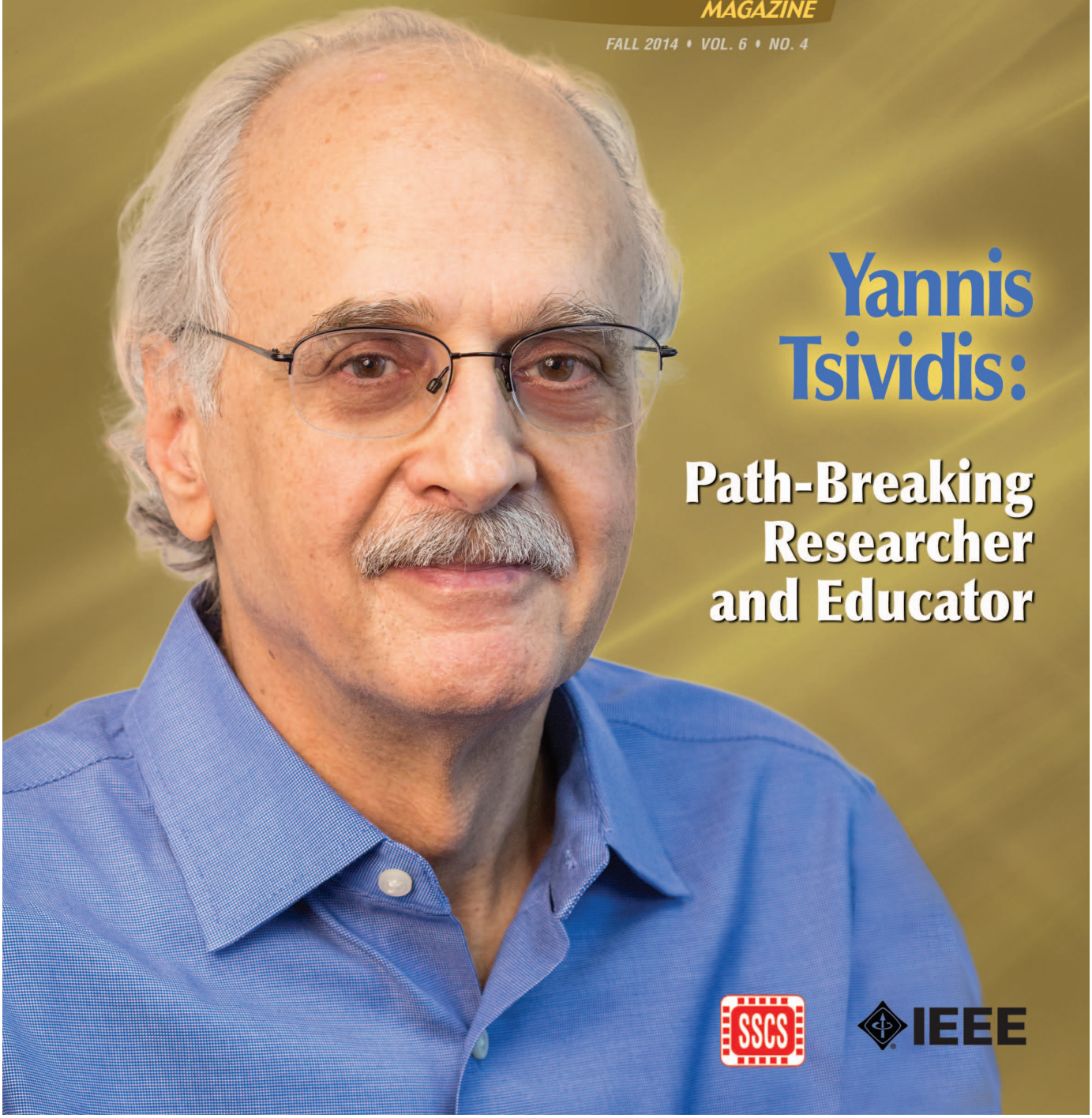

Yannis Tsividis:

Path-Breaking Researcher and Educator

THETA2021071

IPR2023-00819
Theta EX2002

GUEST EDITORIAL

Peter Kinget

A Born Educator and Researcher

It has been a distinct pleasure to coordinate the special section featuring the contributions of Yannis Tsividis to (solid-state) circuits and systems education, MOS modeling, and analog and RF IC design.

I came to know of Prof. Tsividis through his papers and books while starting out as a graduate student in Leuven. One summer we were fortunate to have a summer course on analog IC design on campus, and he was one of the instructors. I distinctly remember his crystal-clear lectures on continuous-time filters (with hands-on simulation exercises in the afternoon!). Most memorable was our discussion about my Ph.D. research topic, where, in a matter of minutes, he zoomed in on the key challenges and opportunities.

A few years later after presenting some of my Ph.D. results at the CICC, I received a letter in the mail from Columbia University. It was a handwritten note from Yannis saying that he liked my paper!

It was really thrilling and stimulating as a student, and later as a researcher and academic, to have these types of interactions and encouragements. Of course, by now I have learned that this is really the hallmark of Yannis, and the articles in this issue illustrate this amply. He is a born educator and researcher. He is genuinely interested in the research of others, stimulates the development of new ideas, and always strives to find the original source of ideas. But, like no other, he is able to identify new directions, even if it means going against what is considered common sense. His career sets an example for all of us in academia. It has been a distinct pleasure to have him as a colleague and mentor at Columbia.

> ***[Yannis] is genuinely interested in the research of others, stimulates the development of new ideas, and always strives to find the original source of ideas.***

Being a guest editor is often considered a "hard" or even "thankless" job. Not this time! All contributors were thrilled to write an article for this issue and were very punctual in delivering all materials in a short time frame, for which I would like to thank them.

Dr. Colin McAndrew highlights Yannis's contributions in MOS modeling. Dr. Khoury and Dr. Banu, former Ph.D. students with a distinguished career in the IC industry, discuss the early development of integrated continuous-time filters. Prof. Krishnapura and Prof. Pavan, former Ph.D. students who followed in Yannis's footsteps by choosing an academic career, recall their experiences as graduate students. Prof. Gabor Temes recounts the impact of Yannis's work in switched capacitor filters and other areas. Prof. Vallancourt has followed in his advisor's educational footsteps and highlights Yannis's unique contributions to circuits and systems education. Prof. Gray and Prof. Vandewalle provide sidebars recounting their interactions with Yannis. Thanks also to the editorial board for approving the proposal to feature Yannis in this issue. Last but not least, I would like to thank Editor-in-Chief Mary Lanzerotti for her skill and efforts putting together the issue.

Digital Object Identifier 10.1109/MSSC.2014.2347771
Date of publication: 12 November 2014

THETA2021072
IPR2023-00819
Theta EX2002

Exploring and Explaining Circuits

Yannis Tsividis

Early School Years – How I Got "The Bug"

I grew up in a suburb near Athens, Greece, to a middle-class family that went through very difficult times. One of my earliest memories is of an attraction to musical instruments, especially pianos, and of my parents pulling me away from them; I was later told that they were afraid I would become a musician, and that I "would starve". To this day, I regret not having learned to play an instrument well. Yet music is very much a part of my life. I credit it, in part, for my interest in radio and audio and, through those, in all things electronic.

School was a refuge for me, and overall I did very well in it, except in some subjects I truly disliked and had trouble with, like geography and history (and later chemistry). Those subjects were taught to us in a way that involved endless rote learning. I was born with limited memory, and found it very difficult to remember the huge amount of seemingly irrelevant information required to do well in those subjects. I would spend long evenings trying my best, ending up in crying episodes.

In contrast to the above troubles, I loved other subjects in elementary school, especially math and later physics. This love extended to things that, at the time, I did not know had anything to do with math; I will mention one of them, which I think is interesting even today. In first

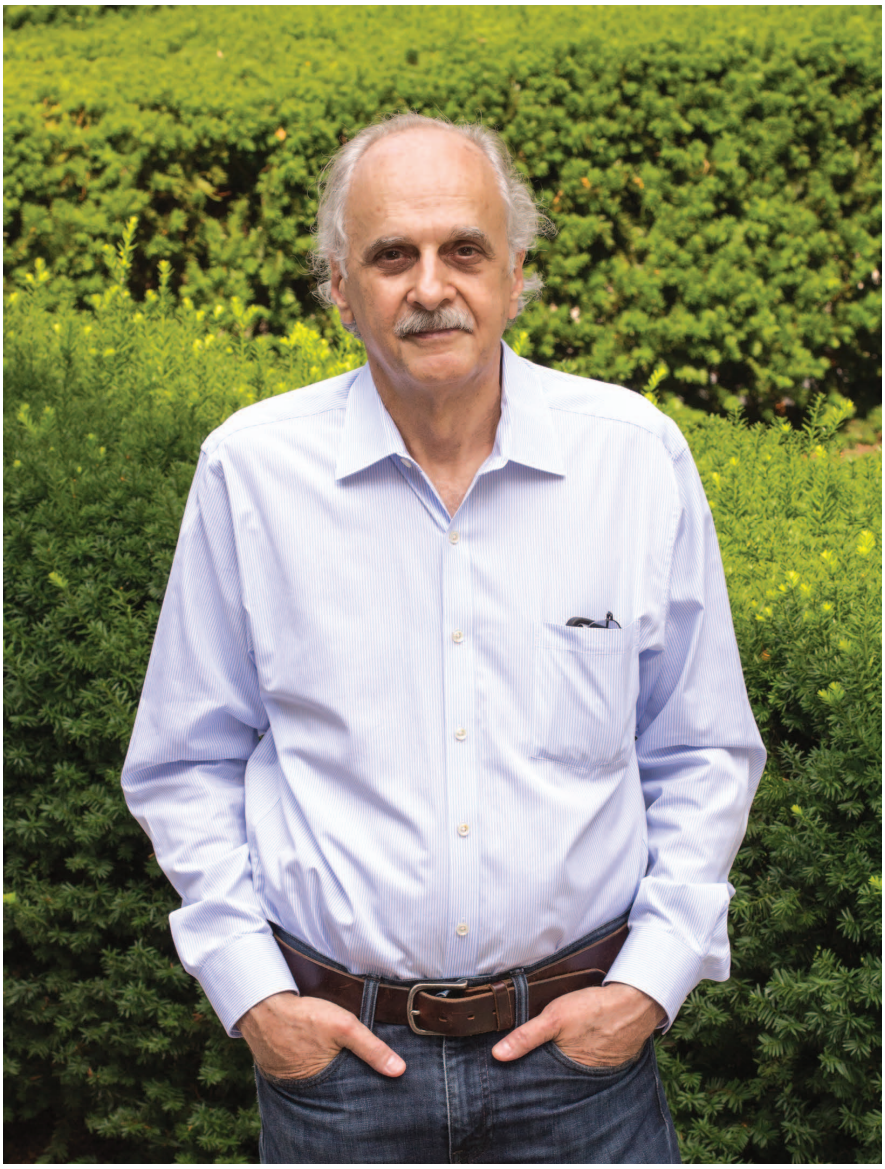

Photo by Barbara Alper.

Digital Object Identifier 10.1109/MSSC.2014.2348933
Date of publication: 12 November 2014

 1943-0582/14©2014IEEE

THETA2021073
IPR2023-00819
Theta EX2002

grade, during class, I used to doodle a lot. My favorite doodle was a continuous line turning and crossing itself a number of times, and ending at the same point it had started; sometimes I would draw more than one closed curves crossing themselves and each other. I had noticed that if I filled in one of the resulting closed spaces on the periphery and left unfilled a closed space next to that, then filled in one next to the second one, etc., there was *never* an instance where, by the time I had finished, two adjacent areas would have to be filled in (Fig. 1). I must have tried this hundreds of times and it was always verified. I was so sure of this that I started telling my classmates and betting on it.[1]

I used to ask a lot of questions in my favorite subjects and sometimes I got in trouble for it. I vividly recall an incident in third grade. The teacher had just introduced π to us, saying that the diameter of a circle fits "three times and fourteen hundredths" into the perimeter. Now, in Greek, the word for "hundredths" is used both to mean just that, and also to mean "hundredths of a meter," i.e. cm. I wanted to make sure I understand what the teacher had said, so I raised my hand and asked her, "Do you mean fourteen hundredths of the diameter, or fourteen hundredths of a meter?" She answered, "hundredths of a meter." That really troubled me. I said, "But how is this possible? No matter if the circle is this tiny, or this big (I made signs with my hands), the periphery is always three times and fourteen hundredths *of a meter*?" She said "yes." I was sure something was very wrong there, and tried to explain, but she cut me off with "Sit down, Tsividis! I *said* it's fourteen hundredths of a meter!" I had to shut up, or I would probably have suffered a few slaps with her ruler. But the incident made an indelible impression on me, as it suggested rather strongly that authority figures are not always right.

If a project looks conceptually interesting, if it helps me get deeper into fundamentals, I am often drawn to it.

From early on, I was interested in all things mechanical. I had been given a Meccano set (known in the US as an Erector Set), and I made all kinds of contraptions with it. I loved magnets. I was also fascinated with flashlights, and soon I was taking apart not only them, but also the batteries in them (I still remember the ammonia smell when I did this). There was a book in the house, something like "Introduction to Electricity," for kids, and I really wanted to read it, but my father kept hiding it from me, as "it was not for my age." I think he had mentioned something to the effect that, if kids get exposed to such things too early, they can become nerds; I guess this, in his mind, was as bad as "becoming a musician and starving." I eventually read that book a few years later, and started experimenting with electromagnets. But the book that played a decisive role in my life was one on the early years of Thomas Edison. I was totally fascinated by it. I kept reading it and re-reading it. I could relate to what was in that book! I could certainly understand Edison's fascination with experiments, as I was feeling it, too. Edison became my hero. Since Edison became a telegraph operator at a very young age, I decided to learn the Morse code, too. With a friend, we strung a pair of wires between our two houses and started sending each other messages. It was very exciting. For some reason, nobody complained that the wires went over a street crossed by cars.

At one point I made, with my Meccano kit plus a couple of other parts, a high-voltage generator of my own design; I would turn a crank, which would cause periodic interruptions in a circuit involving a large electromagnet; the sudden current changes would cause voltages large enough to give you a shock. I later found out that such things already existed.

One thing that intrigued me was that, when someone would ring our door bell, there would be interference on our AM radio, and it could be heard at all frequencies (talk about ultra wide band!) I started experimenting using my own bell, attaching long wires to it and moving them closer to the radio, changing the bell's repetition rate, etc. I had just gotten the radio bug. I later learned that sparks, like the one in my bell, had been in use in an earlier age in spark gap transmitters. Rather than disappointing me, finding out that my experiments and "inventions" were actually not new was encouraging; it seemed that I was in good company, and had found my calling.

I had no lab instruments, of course, so everything was done qualitatively. For example, I would test if the 4.5 V batteries I was using "had enough voltage" using my tongue; it had to sting just enough, and then I would approximately know. This would later lead to a very unpleasant experience. An aunt of mine, coming from abroad, brought me as a gift a portable radio (with vacuum tubes). I decided to make sure the battery in it had "enough voltage" using, as always, my tongue. I felt a horrible shock, not just in my tongue, but in my whole head, which violently

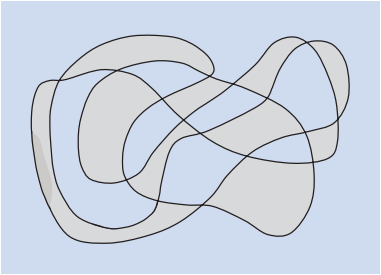

FIGURE 1: Doodle example.

1) About thirty years later, I decided to prove that childhood conjecture of mine; I was able to do it in a simple way, using dual graphs and a theorem I found in a graph theory book.

THETA2021074
IPR2023-00819
Theta EX2002

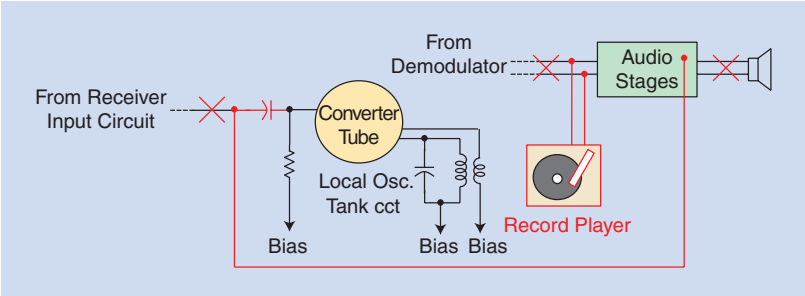

FIGURE 2: Surgery used to convert our old AM radio to a transmitter.

shot backwards. As it turned out, the battery in question was a 67.5 V one. I had no idea such batteries existed. For days after this, I had pain in my spine. I learned to be very careful with high voltage. A 400 V shock I experienced years later (fortunately, not on my tongue this time), while working on a power supply, completed my "training" in this respect.

At 12 years, I read in a children's magazine an article describing how to make a batteryless radio using a galena crystal. I built one, and it worked. I was fascinated. I started experimenting with longer and longer antennas, trying to increase the signal strength. I started collaborating in this quest with a neighborhood friend. At one point we decided to erect a vertical antenna on his roof. It was a very tall wooden pole, several times our height, with a wire wound around it. As we were raising it, we felt (too late) that we could not handle the weight; the thing fell right onto the neighbor's roof, causing serious damage. I still remember that neighbor, coming out in his underware, shouting that we were "shameless." We decided to stick to horizontal antennas (for the time being); those could be 40 m long with no problem. The signals started to get stronger and stronger.

Teenage Years

Soon I was a teenager, and started going to parties where they played American popular music. I really liked that music! But I could not understand a word of the lyrics; at our school, English was not taught (except for a few basic words and phrases near the end of elementary school), and my family could not afford outside language lessons. So I tried to learn some English by myself, just in order to understand some of the words in those songs, or at least their titles. I gradually made some progress, and could finally understand what "Unchain my heart" meant, although I was still puzzled by "Itsy bitsy teenie weenie yellow polka dot bikini." Anyway, this partial success was encouraging, so I kept up the effort. But what really gave a push to my self-training in English was a small book by A. Marcus et al., "Radio for Beginners," found and given to me by a friend. I opened it, and my mouth watered. Starting with a picture of a pebble falling into a lake and creating waves, the book went on to explain how my galena crystal radios worked, and gave schematics for several radios which used tubes for amplification. I really *had* to understand this book! I picked up a dictionary, and slowly worked my way through it. At the end of this effort, I had both understood, for the first time, how radios worked, and learned basic English. I have not had formal training in the language, before or since. Years later, I repeated this "self-training" with other languages and subjects.

So now I could understand both radio electronics, and what those songs were saying. I was fascinated by rock music, and for a time I participated in the rehearsals of a teenage rock group. I was trying to play the drums, the others in the band were trying to play other instruments, and none of us really knew what we were doing. We didn't last very long. But rock, as well as other popular genres at the time, became more and more important to us. Greek radio (at the time only four stations in Athens, all government–operated) had started playing some of this music, but not enough for us. And the formal way they used to announce the songs did not go well with the improvisation and downright craziness of rock. But there was, during the Cold War, an American radio station in Athens, and that was a different story. Announcers on it improvised, screamed, talked over songs, sang along with them, and somehow meshed with the music they were playing. They were having a ball! This fascinated us. We would listen to that station for hours each day.

Radio Pirate

I decided that improvisation had to come to Greek radio, and since the staid announcers on government stations were not doing it, I would try to do it myself. In the meantime, starting in 10th grade, I had enrolled in a correspondence course on radio repair, offered by a local school, which furthered my understanding of how radios worked. But my training so far included only receivers.

I started looking for a way to transmit. We had a beautiful Lafayette cathedral AM radio at home. It was a superheterodyne, with a self-oscillating mixer tube (or "converter" tube), and I now knew what that did. I connected a short antenna to its circuit. Sure enough, the local oscillator signal could now be received at some distance, as I could verify using a second radio (the one with the 67.5 V battery). This was extremely exciting; it was my first radio transmission (other than the more-than-ultra-wideband attempt using a bell, described above). I was now transmitting at a specific frequency, which I could control with the tuning knob. The problem was, this was only an unmodulated carrier. How could I modulate it, and make it carry music? The same mixer tube that generated this signal had multiple grids (for the young readers: an electron tube "grid" roughly

THETA2021075
IPR2023-00819
Theta EX2002

corresponds to a MOSFET's gate). One of those grids was connected to the radio's input circuit, which carried the signal of the station being received, for mixing purposes. But I did not want to receive a station; I wanted to make my own station, so this grid was being wasted. I disconnected the grid, and decided to try using it for modulation, motivated by a vague notion I had that mixing, which is what this tube did, is some sort of modulation. I had access to the input of the audio stages of the radio and I could connect there the output of a record player. The output power tube provided an amplified version of the record player's signal, so I thought of connecting *that* to the now-available grid of the mixer tube (Fig. 2). With the silent carrier being received on the second radio, I placed a record on the record player, and lowered the cartridge onto the record. The music came out of the second radio. I felt extremely excited and emotional. I was modulating and transmitting my own signal!

I began a series of experiments, trying to increase the transmitter's range by trying different pins on the converter tube for connecting the antenna, using a longer antenna, modifying the circuits, etc. Still, I could only transmit in my immediate neighborhood. I made a radio frequency (RF) amplifier on a piece of plywood, and connected my signal to it. This did something, but there was distortion. I started reading up on power amplifiers and how they are modulated, and kept building more and more circuits, until I finally could broadcast over several blocks. I could now have my own radio program. I bought a crystal mike, mixed its output with the record player's signal using a resistive summer with potentiometers, and I was ready. I started broadcasting rock and soul music in the afternoons, after school. I announced music as I pleased, made jokes, and in general felt free to improvise. This caught on with the teenagers in my neighborhood pretty quickly. I was a high-school junior at the time.

I kept up my efforts to increase the reach of my signal, now by "designing" transmitters from scratch. I reached a power of 10–20 W, which was enough to broadcast over several miles. My audience was now rather wide. At about the same time, I started hearing a couple of other kids, from other areas, doing similar things. It is not clear who was earliest, but from all I can tell I was among the first radio pirates in Greece. The phenomenon started spreading. More and more pirate radio stations sprung up, and soon they were dozens, then hundreds, just in the Athens area alone. Every neighborhood had its own radio pirate. Not once during this period did it occur to me that what we were doing may not have been legal. We freely broadcast, and even popular magazines would write about us. So we thought that what we were doing was fine; it was certainly tolerated by the authorities.

School was becoming more demanding. To the subjects I abhorred due to the rote learning they demanded, namely geography and history, another one was added: chemistry, especially the "organic" kind. Now I really started struggling. Whereas I could do my math homework with ease, I would have to spend the rest of the evening trying to memorize dates in history, areas of countries in geography, and formulas of substances with strange names in chemistry. As I was growing, my pains with such subjects kept growing, too. Fortunately, to compensate, I had my radio experiments at home, and at school I had math, physics and two new subjects that were a revelation to me: logic and philosophy. I took to those with an interest rivaling my interest in radio. At one point, a few years later, I considered majoring in philosophy; I didn't, but that discipline, together with electronics and music, fascinates me to this day.

Studying Physics at the University of Athens

I was now looking forward to university studies. Entrance exams in Greece were highly selective and very difficult at the time, requiring knowledge and skills that far surpassed what was provided at most high schools, including mine. But there were separate, private tutoring schools that specialized in preparing students for the university entrance exams. They were a must (and, unfortunately, they still are). Like all students preparing for the exam, I enrolled in such a school, starting in the 11th grade, and indeed I found it essential. Unfortunately, during the last year of high school I had to quit preparatory school, as I could no longer afford it; worsening troubles at home demanded that I get a job instead, and I did, working in amplifier assembly at a local factory. I now had little time to prepare; I failed the entrance exam to the main engineering school at the time, the National Technical University of Athens.

Instead, I was admitted to the physics department of the University of Athens. In retrospect, this turned out to be an advantage, as it broadened my perspective, and it would later complement my engineering education. The courses were extremely rigorous. First-year calculus was like a graduate course in real analysis. The real numbers were defined using "Dedekind cuts," and we had to prove everything rigorously, including, for example, that 1>0. In the exams, if we would successfully calculate an integral without first proving that *it existed*, we would get no credit. Frankly, all this was way above my head and that of most of my classmates; but it left something in me, which later matured and became a significant asset.

The university was nothing like what I would later find in the US. The professors did not trust the students, and the students did not trust the professors. Courses were year-long, and were very difficult to pass; the passing rate in some of them was 10 to 20 per cent. The climate was such that many of us would not go to most classes, preferring instead the local cafés. There was no homework.

THETA2021076
IPR2023-00819
Theta EX2002

At the end of the academic year, we would get together with classmates and pull all-nighters, cramming for the exams. We would pass some, fail others, and try again later in the year, or the year after that, until we passed, without having to re-enroll in the courses. That was the norm. For me, the situation was further complicated because I had to keep part-time jobs in order to make ends meet.

Nevertheless, I did not abandon electronics and my love of broadcasting. Rather, I found a way to incorporate them into my university activities. The university was housed, at the time, in a number of disjoint buildings in downtown Athens. To find out when and where an exam would be held, you had to look for an announcement outside the office of the corresponding professor, in the appropriate building, a few days before the probable date of the exam. If there was no announcement, too bad; you had to go look for one again the next day. This and other bureaucratic complications were a nightmare, especially for students who lived far from the center of Athens. I decided to start an "Information Radio Station for 1st-year Physics Students of the University of Athens." Our class president, who lived close to the university, would take daily rounds and collect all information regarding exam dates; he would phone them to me; and I would announce them on the radio, using my transmitter. Students tuned in every day to hear the latest bureaucratic details. This worked, and it was even reported in some newspapers.

At the same time, I continued to broadcast my regular music programs. I needed to increase my range further, to reach a larger audience. I partnered with friends, who became regular announcers and the main source of funding, whereas I happily resigned to the role of engineer. You can see one of my transmitters, with 40 W output power, and with audio mixer integrated, in Fig. 3. The stations became very successful, attracting a lot of young listeners. We would give out our phone number, and would be flooded by phone calls by listeners; the government phone company threatened to cut our phone off, because the large number of calls to the same number at the same time kept creating problems with their equipment. The highest power I reached was about 250 W, which was enough for us to be heard in a radius of about 25 miles, and we were told that at night our signal could be picked up in the island of Crete, over 200 miles away. High-quality amplitude modulation seemed to be my specialty. The modulation transformers I used were made by a local transformer shop to my detailed instructions, including the number of turns in each winding, and how the windings were to be split and interleaved for better high frequency response. Later, after years of AM broadcasting, I also got interested in trying FM, which was then being introduced in Greece. It may be surprising that I found it much easier than AM! I ended up using a single power tube in oscillating mode, and applied *amplitude* modulation to it. Since this was not a very stable oscillator, the resulting voltage variations on the tube's plate (corresponding to a MOSFET's drain) affected the oscillator frequency and resulted in frequency modulation, which for some reason was of exceptionally high quality. The circuit became popular with a number of FM radio pirates, who started becoming as numerous as AM pirates. This situation eventually led to FM private radio stations in Greece.

In the meantime, I had obtained my radio amateur license and had begun to make regular contacts on shortwave with other amateurs all over the world. Starting in the 2nd year of my university studies, I also got my first taste of "publishing." There was a magazine in Greece at the time, called "Electronic News," and they accepted to publish a variety of articles by me, mostly on construction of hobby circuits (amplifiers, receivers, transmitters, alarms, metal detectors, etc.), some resulting from modifications of circuits I would find in foreign magazines, and some of my own design. I wanted to include transistor circuits but, in contrast to vacuum tubes, which I knew a lot about, transistors were still a mystery

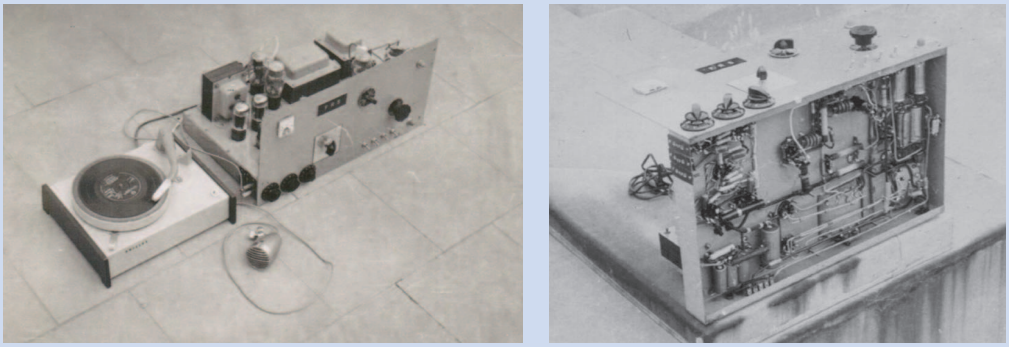

(a) (b)

FIGURE 3: (a) A 40 W transmitter I made while in college in Greece, with incorporated audio mixer. (b) View under the chassis.

THETA2021077
IPR2023-00819
Theta EX2002

to me, and I did not know what I was doing. One fun example of the sort of thing I came up with was a circuit for a "radio for the shipwrecked," using two batteries in series consisting of plastic thimbles in which copper and zinc electrodes were placed, and were filled with sea water — the one thing that these hypothetical users would never run out of. The circuit included two bipolar transistors; the *only* element connected to the base of one of them was a capacitor. These days, if a sophomore commits such a blunder, I consider it a mortal sin; but back then I did not know any better. Neither did the editors of the magazine, I guess, as they let me publish it. The funny thing is that those circuits *worked*! Decades later, as I leafed through some of the magazine issues I had kept, I was embarrassed to see those designs, and started wondering how on earth those circuits worked, if there was no path for DC base current to flow. Knowing by then how transistors worked, I solved the mystery: The collector-base reverse-bias leakage current, of which there was plenty in those germanium transistors, served as the base DC bias current.

It is clear from the above, and it became clear to me from other indications, that I needed better training. With money I had saved from repairing radios, I enrolled in a correspondence course called "Electronic Engineering Technology" from CREI (Capitol Radio Engineering Institute) in Washington, D.C. This course, which was at a rather high level, with lessons written by experienced engineers, really increased my understanding of electronics well beyond the hobby level. I could now publish more competent articles in Electronic News, including on theory, e.g. on resonant circuits, modulation, etc., as well as a series of articles I called "The Mathematics of Electronics."

Volunteering in the Electronics Lab

The physics department of the university had a sort of Master's program in electronics. The labs there attracted me like a magnet. I presented myself to the professors, and offered to help with anything I could. I was soon repairing instruments for the lab and helped build things, and they liked me. They asked me – to my surprise – to act as a teaching assistant for some of the lab classes for the Masters' students. I was thrilled, although I was not sure how this would go, as I was only an undergraduate. But it went well. There is one experience from those times, which I will never forget. One of the lab exercises was to build a power supply using a kit from Heathkit. One of the teams called me, complaining they had powered the unit up and were not getting a voltage out. I leaned over their chassis to investigate, and I spotted an electrolytic capacitor actually bulging, with the plastic around it melting and stripping off the metal. I screamed, "Pull the plug, quickly!" But before they could do this, the capacitor exploded, literally in my face. At the time I had a beard, and it was covered by a white substance from the capacitor; I looked like Santa Claus. Worse, one of the capacitor's terminals was blown over and got stuck, like a needle, into one of my eyebrows. I do not know where I got the calm, but I found this a perfect "teaching moment"; rather than cleaning myself up, I made the rounds in the lab and showed everybody there what can happen if they do not obey proper polarity with electrolytic capacitors, especially with a few hundred volts across them. I am sure they never forgot this.

But I also got to do research in the electronics lab. I had read in Popular Electronics (an American magazine, which back then you could find in some of the kiosks of Athens), that it is possible to convert a flame into a loudspeaker by applying a time-varying voltage across it. Not many details were given. Together with my classmates, Demetri Paraskevopoulos and George Keramidas, we decided to look into this. Working in Demetri's home, we connected a radio's audio signal (through a transformer) in series with a DC voltage, and applied the sum to two electrodes, one near the bottom and the other near the top of a flame, which was produced by a Bunsen burner fed from a butane gas tank. We turn the thing on, and we are suddenly listening to a highly distorted version of the evening news, coming out of the flame! We got really excited, and started a series of experiments, literally groping in the dark (nothing wrong with that). We tried various magnitudes for the DC and AC voltages; we varied the distance between the electrodes; and we tried introducing various substances into the flame (salt seemed to work particularly well). Finally, we tried lowering the flame temperature, by reducing the flow of gas, turning its color from blue to yellow. We found that lower temperatures resulted in less distortion; unfortunately, they also resulted in smoke which darkened the white walls, to the dismay of Demetris's mother. So we asked the Electronics Lab at the university to house the experiment, and they gave us a room and equipment for this purpose. You can see that setup in Fig. 4. We continued the experiments there, and developed a theory to explain our observations. We wrote a one-page report on it, in English, which we later used as part of our applications to US universities. All three of us ended up in the US.

Organic Chemistry Catches Up With Me

I mentioned earlier my problems with memory. Those problems, first noticed in elementary school, continued in high school, resulting in my spending far more time with subjects that required rote learning. At university, those problems caught up with me, in what turned out to be my nightmare for years: Organic Chemistry. This year-long subject required memorization of innumerable facts. The book was thick, and I was called to memorize most of it. I tried, and tried, but it was just impossible for me; I felt as if there were more facts to memorize than I had synapses in my brain. I could make some progress

THETA2021078
IPR2023-00819
Theta EX2002

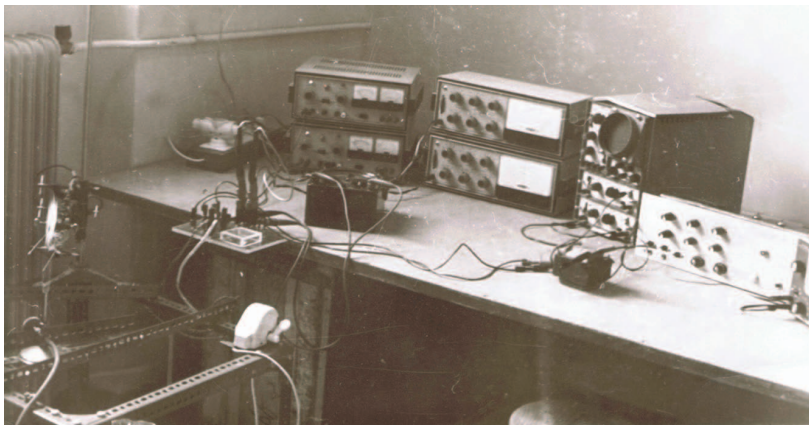

FIGURE 4: The singing flame experiment setup. The flame is visible on the extreme left.

with some of those facts, if I could deduce the underlying principles, as was the case with some reactions. But why was I called to remember some of those endless strings of symbols for existing substances, and why should I remember that the preparation of a certain substance requires heating the mix at 130 °C for 45 minutes? My poor memory, together with sheer anger towards what I considered an irrational demand of me, and the unacceptable way they were teaching the subject, conspired to make it impossible for me to pass the exams. I tried studying for long days and nights, until those C's, H's, and O's became nightmares; I tried getting tutoring; nothing worked.

As I said earlier, at that time university students could keep taking the exams for each course, twice a year, until they passed, without having to re-enroll in the course. My efforts to pass organic chemistry, a second-year course, continued for three-and-a-half years. I still have my student records; here are the grades I received in succession in organic chemistry (out of 10, with 5 being the minimum passing grade): 0, 1, 3, 3, 1, 1, 2. It finally became clear to me that this sequence was not converging to a number at least equal to 5, so I decided that I had to do something drastic about it.

I had heard that university education was excellent in the US, and that studies there were appealing; that students were respected and were considered individuals, not necessarily fitting into the same mold, and that the system was flexible enough to allow students to take advantage of their strong points. This sounded like a dream to me. I had already been thinking of coming to the US for graduate studies; organic chemistry pushed me to take the leap earlier.

I began a frantic effort to find the money required to come to the US. I worked at several jobs, including radio repair; TV antenna installation; tutoring high school kids in physics and math; etc. I was also hired as a stereo salesman. (I did not last very long in that job, as I could not sell a single unit; the problem was that I *really* wanted to explain to the customers why the particular stereo I was recommending was technically the best.) I even tried my luck in the local music industry; I wrote the lyrics for one song that was released as a record. But my main income came from making, selling, and installing transmitters (with audio mixers incorporated) for other pirates. Unfortunately, the needs of day-to-day existence left few of my earnings for savings, for me to accumulate in order to come to the US. Finally, a beloved aunt of mine offered me part of the alimony she had received from her recent divorce. That did it.

In the meantime, I had written to a couple of dozen US universities, and about half had answered and had sent me application forms. I filled them all in, using every piece of evidence I could come up with to convince the admissions committees that I would be good at what I wanted to study, namely, electrical engineering. I included a copy of the report on our research on the singing flame, which I mentioned above. I then waited, keeping my fingers crossed.

Months later, replies started coming in. Most universities did not admit me, I guess due to the uncertainties involved in accepting an undergraduate transfer student from a place they knew little about. But then a positive reply came in: it was from the University of Kansas. I recall vividly how I felt. I started jumping around the room. I took the train to Athens, and bought a record I knew, "Kansas City Here I Come," returned home, and started playing it and dancing to it. That same day, I tore my Organic Chemistry book to pieces.

Following that, I got two more acceptances, from Auburn University, and from the University of Minnesota, Minneapolis. They were all good schools. After considerable deliberation, I settled on the latter.

Studying Electrical Engineering - Finally!

I arrived at the University of Minnesota in the fall of 1970. From the very beginning, my time there was a dream come true. I found an exciting academic environment, with students from all over the world, a lot of freedom, and a lot of "my music," both on and off campus. I had a lot to see and learn, and was very excited about it. The bitter cold, of which I had been warned repeatedly, was nothing to me. So what if the temperature could reach – 30 °F (–34 °C)? I was in heaven. The professors recognized students as individuals and cared about them. Students asked a lot of questions, and received answers. The classes were appealing and challenging, and there were electives! There was weekly homework (I loved it!), and quarterly exams. I encountered open-book exams for the first time. And there was something called *take*

THETA2021079
IPR2023-00819
Theta EX2002

home exams: it seemed unbelievable to me that I was allowed to work out the exam problems at home, merely by signing a statement certifying that I did the work alone and did not spend more than three hours on it. I said to myself, "these people trust me!", and was brought to tears (literally).

I was given transfer credit for general science classes, and had to start from zero in engineering. I was not asked to take organic chemistry! By the way, I want to share an incident from my first days in Minneapolis. I had cut myself, and went to a pharmacy. I knew what I wanted, but for some reason the word would not come to me. The pharmacist kept showing me products I did not recognize, like betadyne. After a few frustrated attempts to explain what I wanted, I took a piece of paper and wrote on it "CH_3CH_2OH," and showed it to the pharmacist. He went, "Ohhh! Alcohol!..." So there *was* some use for the organic chemistry I had learned, after all. I felt mildly proud.

I plunged into my classes with enthusiasm, and learned a lot from them. I was experiencing, for the first time, what it is like to be *motivated* to study at a university. At the same time, I knew my limited money would be over in a few months, so I had to find a part-time job. Thanks to my electronics experience, I quickly found a job as a technician in research labs, and later at the Space Science Center. I kept taking a full-time academic load, and also took courses in the summer. I graduated in less than two years, "with high distinction."

In the quarter following graduation, I became a lab teaching assistant. I was told that there was a recurring problem with the students' ability to use the oscilloscope. I offered to make an instructional tape, called "Everything You Always Wanted to Know About the Tektronix 503 Oscilloscope, But Were Afraid to Ask"; students who felt they needed an introduction to the instrument or a refresher, would sit in front of the oscilloscope and be guided by the tape through a set of detailed instructions, trying things hands–on. I was given the OK, prepared the instructions–to–be–taped, and asked a professor to record them in his voice, so that students would not have to struggle with my strong accent. The tapes worked well, and I understand they continued to be used even after I left. I later repeated this approach as a teaching assistant at Berkeley.

I feel I owe a lot to the University of Minnesota, affectionately called "the U of M."[2] It provided me with a high-level education, motivated me, gave me an opportunity to show what I can do, and paved the path that allowed me to go on to a rewarding career. What more can a student ask for? I owe a lot to them. So it was very moving for me when, in 2013, the university gave me its Outstanding Achievement Award. To this day, the U of M has a special place in my heart.

Berkeley

In 1972, I started my graduate studies at the University of California, Berkeley. I arrived there with a desire to do true research. I had already received an invitation from Prof. Leon Chua, to work with him. So as soon as I arrived at Berkeley, I went to see him. He described to me his latest brainchild, the memristor, and showed me a large box full of electronics which, across its two terminals, behaved like a memristor. He told me that part of my research would involve the making of an improved circuit with memristive behavior. The whole thing sounded intriguing. But then he looked at me intensely in the eye, and said "I want you to work *very* hard!" That was something that worried me. I had no problem with working hard, but I had just arrived at Berkeley, a place full of life, not just work, and I wanted to taste that life, too. I had a fellowship, so I decided to politely decline Prof. Chua's offer and keep an eye for other possible projects/advisors. In the mean time, I started my class work, and I soon became a teaching assistant, which meant that there was no urgency to settle on an advisor.

The department of electrical engineering and computer science was a very exciting place. I attended and/or audited classes on integrated circuit (IC) design taught by Paul Gray, Dave Hodges, and Bob Meyer, and learned a lot from them. All three had industrial experience, and this permeated their classes; you could bet that what they taught you was highly relevant. In addition, those classes were full of Silicon Valley engineers, most of them studying for a Master's degree. They asked very relevant questions, and this made those IC design classes all the more interesting. But I also took classes in many other subjects, including theory of signals and noise, communications theory, circuit theory (then called "network theory"), linear systems theory, and nonlinear control. These classes satisfied my theoretical side, which to this day co-exists with my practical side. Memorable among those classes was the one on linear systems, taught by Charles Desoer. He had a real impact on me with his knowledge and rigor. Later, I had the opportunity to teach an undergraduate class at Berkeley based on Desoer and Kuh's *Basic Circuit Theory* [1], which had a decisive effect on me.

Time was passing by, and I still did not have an advisor. I thus approached Bob Meyer, who told me I could work with him on oscillators. Having already made many oscillators, somehow the area sounded too familiar to me (I didn't know any better, to realize how deep a topic this can be), so I did not accept; I wanted more unfamiliar territory (this attitude is something that never left me). It was now getting late; I had been at Berkeley for two years already. In the meantime, I had made what I called an "electronic musical instrument played by singing or whistling," which had even made the local news.[3] I invited Paul Gray to the lab, demonstrated

2) I recently learned that other universities, in different states that begin with an "M," also call themselves "the U of M."

3) I tried to patent it, only to find out that the idea already existed; "nothing new under the sun," as they say.

THETA2021080
IPR2023-00819
Theta EX2002

the instrument to him, and asked him if I could do a Ph.D. under him. He said yes, and became my research advisor; I was one of his first Ph.D. students. His advising style was unobtrusive; he gave me a lot of freedom, and interfered only when there was reason to do so.

The First Fully Integrated MOS Op Amp

Paul Gray and Dave Hodges had started a joint effort to make possible mixed-signal metal-oxide-semiconductor (MOS) chips, so that one could take advantage of the synergy between analog and digital, while at the same time benefitting from the high transistor density possible in MOS processes [2]. Analog circuits on MOS chips were almost unheard of at the time, except for A/D converter chips that had recently been designed by my classmates, Ricardo Suarez and Jim McCreary. What was missing in order to take the next step was a MOS op amp, with low output impedance and internal compensation. I was asked to try and design one, and make it in Berkeley's fabrication lab myself (no "silicon foundries" at the time). I plunged into this work enthusiastically. I had to start from practically zero, as there were no other analog MOS integrated circuits on which to build. This is hard to imagine today, since analog MOS circuits are now mainstream, but back then, MOS transistors on chips were widely considered suitable just for digital work. I still recall a visit by an engineer from one of the Silicon Valley companies that supported the IC group's work, who came to see what I was doing, and said "So, I understand you are trying to make an amplifier out of switches?" But I did design the amplifier; you can see the circuit in Fig. 5(a). If some of it looks strange today, it's because by now we have been spoiled by CMOS circuits; but all I had to work with in the Berkeley process were nMOS transistors. In the course of design, I benefitted from discussions with several able classmates, notably Bedrich Hosticka, Jim McCreary, José Albarrán, Dan Senderowicz, George Smarandoiu, Ricardo Suárez and others. I had early access to Spice, and simulations of the circuit I had designed were encouraging, so I decided to lay it out (manually!) and fabricate it in the lab, in a 12 μm process.

I will not delve here into what it was like to design ICs and make them at Berkeley in the mid-1970s; I have recently written an article on this in this very magazine [3]. But I should say that the fabrication part of my work was a frustrating experience for me. It involved about one hundred steps and sub steps, some using dangerous chemicals and high-temperature furnaces (Fig. 5(b)). In order to avoid surface contamination, I could not take a break, and had to work through the night. I had started a batch with several small wafers, hoping to get at least some working chips on them. The wafers were to be handled using tweezers. With my usual clumsiness, I kept dropping the wafers, which would instantly break. I was finally left with one wafer, and some classmates may remember my declaration that, if this one broke too, I would quit electrical engineering and go to medical school.

That last wafer fortunately did not break. I cut it into chips, by placing a ruler over the wafer, scribing lines with a glass cutter, and breaking it along those lines. You can see the chip in Fig. 5(c) (the "j" on it reflects the fact that, back then, I was called "John"). I had the chips packaged, and started measuring. To my delight, a few chips worked. The op amp's performance would be unacceptable by today's standards (see [4]); it required supply voltages of +15 V, –15 V, and a back-gate bias of 1.5 V. Drawing a current of 5 mA, it provided a gain of just 51 dB, and a unity-gain frequency of 5 MHz. But it was a first;

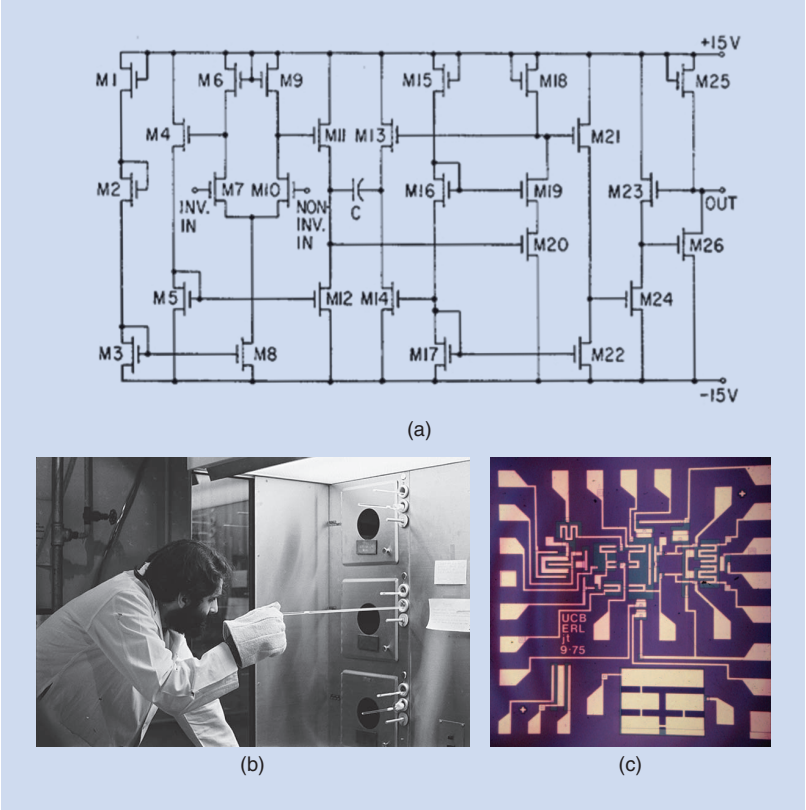

FIGURE 5: The first fully integrated nMOS op amp [4]. (a) Schematic, (b) Making the chip, (c) Chip photo.

THETA2021081
IPR2023-00819
Theta EX2002

it was instrumental in convincing the community that analog circuits can co-exist with digital ones, on the same MOS process. I felt elated and relieved. I had worked like crazy, and the whole project had taken me 10 months, day and night; the only way I could get analog MOS out of my mind when I went home in the late evening, so that I could sleep, was to watch reruns of early TV shows.

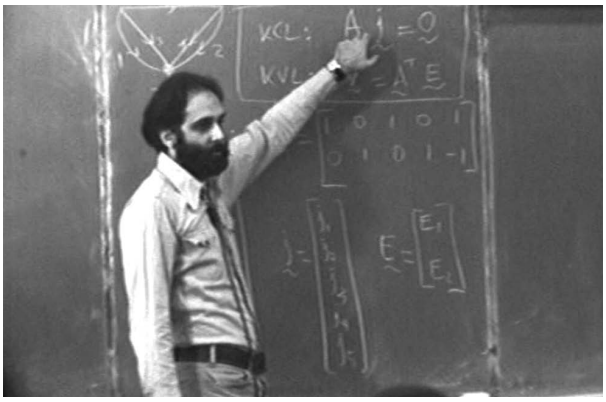

FIGURE 6: Teaching circuit theory at Berkeley in 1976.

With the help of Master's student Jacob Chacko, and using capacitor arrays provided by Jim McCreary, we demonstrated the amplifier's use in a PCM voice codec for telephony. I presented the results at the 1976 ISSCC [5]. There was very high interest from the industry, which picked up the ideas right away, and produced commercial PCM codecs. Analog and mixed-signal MOS ICs really took off. Our PCM codec is now featured in the communications circuits section of the ISSCC 50th Aniversary Virtual Museum [6].

A few years later, during ISSCC, I was introduced to Bob Widlar, one of the pioneers of analog ICs, and the developer, in the nineteen sixties, of the first mass-produced IC op amp (all his circuits were in the technology available for analog circuits at that time, namely bipolar technology). When he heard my name, he thought for a moment, and then said "Oh, you're the analog MOS freak, right?" To him, using MOS technology for analog functions was just funny.

I was a teaching assistant for several semesters at Berkeley. I enjoyed it very much, and evidently so did the students, as I received the HKN—University of California Society of Electrical Engineers Outstanding Teaching Assistant Award, the first time it was offered. I received it again the last term I was a teaching assistant. Following that, I was made Teaching Fellow and then Lecturer. I taught circuit theory on camera (Fig. 6); the tapes were sent to people in Silicon Valley taking the course, who showed up on campus for the exam. This was an new experience for me, which I was to repeat many times years later.

I graduated in May of 1976, and begun looking for a university to hire me. Back then there was little IC design activity at universities outside Berkeley, and related positions were rare (let alone the fact that my specialty, analog MOS circuits, didn't ring a bell with most academics). Thus, I could only get the attention of two places. The first was the University of Florida. During my presentation there, I made a statement to the effect that nonlinear memoryless circuits have harmonic distortion that is independent of the value of the input frequency. A gentleman in the back of the room said, "Why?" I answered that it was obvious; he said that it was not, and we went back and forth a couple of times, until I said, in what I think was an annoyed tone, "OK, I will explain it to you after the end of my talk." Indeed, at the end of the talk, my host introduced me to that gentleman, saying "I would like to introduce you to Professor Rudy Kalman." I was very embarrassed for having answered that way to such a well-known man. But I proved my claim to him, and he was happy (he was probably testing me all along). I got an offer.

The second interview I got was with Columbia University in New York. It went very well, except that I learned years later that after my interview I was referred to as "the guy in the sweatshirt" (they meant my turtleneck). But they made me an offer. I now had offers from two good places. I chose Columbia; among other things, New York was very convenient for flying to Greece, which I thought I would be doing often.

Professional Life

When I arrived at Columbia in 1976, there was no IC design activity there. I thought of this as an advantage, as it would allow me to "name my own game," and set up things from scratch, which is what I proceeded to do. I published a paper on analog MOS circuit design techniques [7], and embarked on an effort to further develop the techniques and expand their scope. I gradually formed a group, which went by various names, including "Mixed Analog–Digital," or MAD, group. (I used to say to my students that "MAD" also stands for "mutually assured destruction," which is what you may get when you put analog and digital circuits together on the same chip, if you are not careful.) You can see several of the early members of the group in Fig. 7.

Soon after arriving in New York, I met my wife, Felicia, and we started a family. A full family life has provided balance for me and has indirectly influenced my work. I have been lucky in that my family has always understood my love for my profession, and has been supportive of me.

I have spent most of my professional life (indeed, most of my adult life) in New York. I still work at Columbia; it has always been a welcoming place to me. Almost all of the research and teaching activities I will describe below have been done at Columbia. But I have also worked at other places, notably Bell Labs. While still at Berkeley, I had received a call from Carlo Séquin, who at the time was with the Labs (he was not in computer science back then). He wanted detailed information about my op amp; they had a strong effort in

THETA2021082
IPR2023-00819
Theta EX2002

FIGURE 7: Members and alumni of the mixed-signal group at Columbia in the late 1980s. From left to right: Ken Suyama, San-Chin Fang, Peicheng Ju, Laszlo Toth, Mihai Banu, the author (sitting), Venu Gopinathan, Dave Vallancourt, Steve Daubert, John Khoury, Srinagesh Satyanarayana.

charged-coupled devices (CCDs), and needed an op amp for their chips. I was happy to provide the information, and this lead to an association with Bell Labs, full-time during summers, and part-time during the academic year. This relation lasted for ten years, starting soon after I came to Columbia. Bell Labs was a unique place; I will talk about this in my section on research below.

In 1980, I was invited by MIT to teach my analog MOS class there. They already had an effort in digital very large scale integration (VLSI), and wanted to expand to analog circuits. Columbia had no problem granting me a one-semester leave to do this. The class was widely attended by students from a variety of specialties, including artificial intelligence, as well as faculty. I included an extensive design project, and the students' designs were laid out and fabricated, as part of a multi-project chip [8]. This, to my knowledge, was the first application of the multi-project chip approach, which was then beginning to take off with digital circuits [9], to analog circuit design.

In 1990, the National Technical University of Athens (NTUA) invited me to teach there as a full professor. This was pretty satisfying, given that I had failed to pass the entrance exam to that school as a student! I accepted, and taught there for a few years. I founded the IC design group at NTUA, worked to get a significant amount of funding for them from the European Union, and co-founded a startup in the wireless radio area with Prof. Y. Papananos. The company developed significant technology, covered by 20 patents, and produced custom advanced radio designs, achieving some important firsts. But as the industry consolidated, it could not compete. Yet it and the lab at NTUA helped train several IC designers, and today there is significant mixed-signal IC design activity in Greece. This is very satisfying to me. I had long felt that I wanted to do something for my country of birth. Yet for a variety of reasons, after a few years I decided to return to the US.

Some Thoughts on Research

Writing this article has been a great opportunity for me to look back and try to identify common threads in what might seem a large number of unconnected research projects I have undertaken over many years. I have identified several such threads.

If a project looks conceptually interesting, if it helps me get deeper into fundamentals, I am often drawn to it. I also like research projects that show that our assumptions are wrong. Much in engineering, as in society, is based on unjustified assumptions and pre-conceived notions, which sometimes come down to prejudices. I like to re-consider such assumptions, and see if they hold; if they do not, I try to see if this realization allows me to invent something new. Perhaps this attitude started in my Ph.D. work, which questioned the belief that MOS transistors on chips are inadequate for analog work, and resulted in the first fully integrated MOS op amp. But perhaps it is also due to my way of learning. I do not grasp new concepts fast; I start asking myself a lot of questions, which results in an initial state of total confusion. I have thus learned to gradually make sense of things; checking concepts and underlying assumptions is part of this process.

Finally, I like research that has a chance of leading to useful applications. In electronics, there is a long history of academics touching people's lives. Of the giants in our field, probably the one I admire most is Edwin Armstrong, who was a student and then a faculty member at Columbia; he is the inventor of the regenerative receiver (while he was still an undergraduate student), the super-regenerative receiver, the superheterodyne receiver (although some give him only partial credit for this), and wideband FM radio. His is an inspiring, albeit sad, story. I have written a short biography of him [10]; readers may want to take a look, even if just for the photographs therein.

I have been fortunate that some of the work of my group has lead to industrial applications. On the other hand, some of it has not. That is fine; I remain hopeful that most of it will be eventually picked up by the industry. In the mean time, I am happy if the work explores something new, is conceptually interesting, and teaches something to the students and to me. I guess I am an academic at heart, while not failing to recognize the industrial context of most of our work.

I was associated with Bell Labs for ten years, starting in the mid-seventies.

THETA2021083
IPR2023-00819
Theta EX2002

This was research heaven for me. I do not think I need to mention how much came out of that organization. This was due not only to the excellent engineers and scientists that worked there, but also due to their visionary and open-minded management. I had plenty of opportunities to observe this, although I worked there mostly part-time. I was fortunate to have George Smith, the co-inventor of the CCD, as my department head. He allowed me a lot of freedom in choosing topics that were exciting to me. People today, used to research micromanagement, may find this strange. But George Smith knew something about open research; he went on to win the Nobel Prize several years later.

Unfortunately, in the past couple of decades such attitudes toward open research have become rare. I do not need to elaborate on this; Andrew Odlyzko's excellent paper, "The decline of unfettered research," written while he was still with AT&T, discusses the phenomenon and its repercussions in detail [11]. Decades back, open-ended research was certainly done in places like Bell Laboratories; the management there understood that open-ended today does not mean non-profitable tomorrow. Today, the IC industry has become very conservative. I do not wish to judge this; I am sure they know better what is good for them in the short term, given today's economic situation. But *somebody* must continue to do open-ended research; and universities can fill that role. Yet industry, when it comes to supporting university projects, will almost always prefer ones that will produce results they can use right away. By the way, it's not that I do not appreciate targeted work in universities. I know how challenging and rewarding it can be, and how well it prepares students for work in the industry. But I think that there should be room for unconstrained research, too, and that it is in the long-term interest of the industry to support such research more actively.

My desire to do open-ended research has often run against funding constraints. I often cannot justify supporting students to work on a new "wild" idea, from funding that has been obtained to do work in a different area. I thus often find that I have to work on such ideas by myself. Using the results of such work, I can often convince project proposal reviewers to recommend funding for continuing that work with graduate students.

When I had returned to Greece in 1990, I wanted to get research funding for the IC Design Lab I had founded at the National Technical University of Athens. To get European Union funding in my area of work, several universities and companies had to collaborate together, and submit a joint, *very* thick proposal containing not only a research description, but all kinds of detailed plans, pie charts, and something I had never heard of before: "Gantt charts," which show visually when each sub-component of the proposed research will start and finish. I could not believe this. If I must give a detailed plan, specifying *what* results will be available *when*, this means that I already *know* what needs to be done to achieve those results. So *by definition* this is not research, let alone unfettered research. I felt that, at least in my field, more freedom was needed, and tried to convince officials in Brussels of this, but I did not get anywhere.

In general, the bureaucracy I encountered in Europe was something that I found difficult to take, and I used to mention to my European colleagues how much better things were in the US. Unfortunately, after I returned to the US, I observed that the US research model started going gradually toward the European model (at least, the one I had witnessed), rather than vice-versa. Over the years, I have found that a larger and larger part of my time has to be devoted to dealing with bureaucratic procedures. Everything seems to have become more complicated, from dealing with university bureaucracy, to writing research proposals and progress reports, to dealing with silicon foundries. I can spend entire afternoons dealing with such complications, working on required formats, filling in forms, answering emails, etc. At the end of such a session it is natural to say "I got a lot of things done today." But something is wrong with this picture: most of the things I got done were things I shouldn't have had to do in the first place. In such cases, I invariably remember a quote I once heard, that went something like "frantic movement is no substitute for thinking." So true.

Representative Research Projects

I will now briefly talk about the research of our group at Columbia over the years. Due to lack of space, I will only describe some of our representative projects.

Switched Capacitor Circuit Analysis and Simulation

For a long time, attempts to integrate active RC filters had gone nowhere, as such filters have frequency responses relying on *RC* products which have large tolerances and temperature variations. In the mid-1970s, it was suggested that a resistor can profitably be replaced by a switched capacitor C', resulting in an effective resistance T/C', where T is the switching period.[4] This makes a filter's frequency response dependent instead on C/C', which is great, as ratios of capacitances can be defined with high precision on chips [13]. This observation lead to a major development: the now familiar switched-capacitor integrated filters. I was not happy with the proofs of the resistor/switched-capacitor equivalence that I had seen, and decided to analyze what happens exactly. I showed that if you take a first-order high pass RC filter, and replace the resistor by a switched capacitor, you can get

4) It was later discovered that the resistor – switched-capacitor correspondence had been described by James Clerk Maxwell [12] in the 19th century.

THETA2021084
IPR2023-00819
Theta EX2002

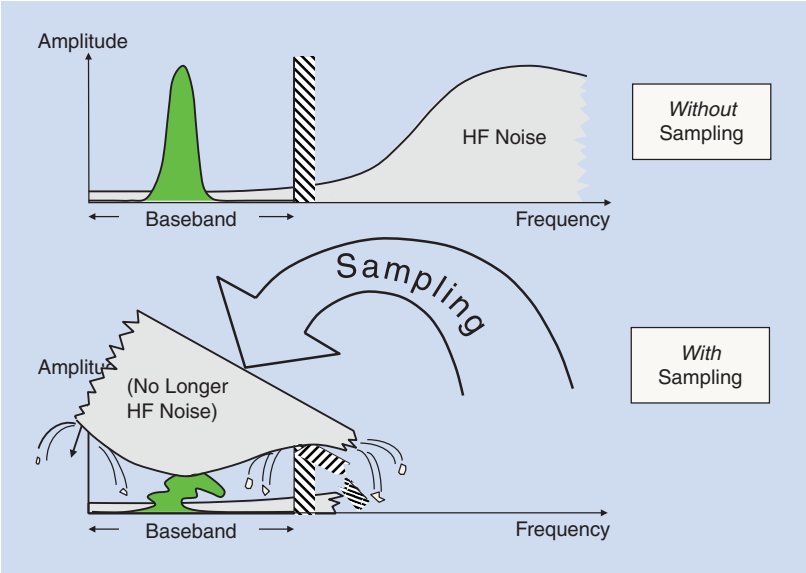

FIGURE 8: My view of what noise aliasing can do to a signal.

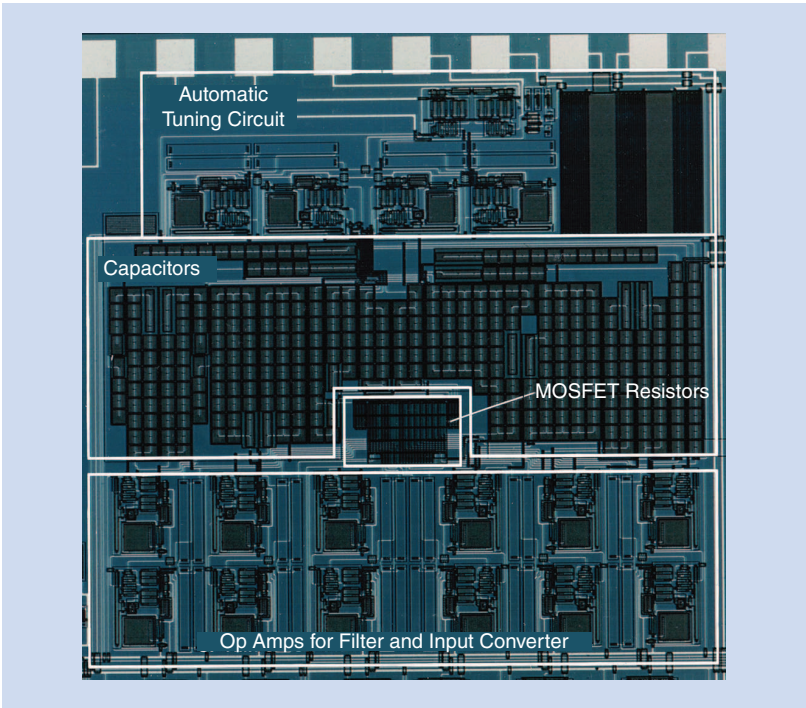

FIGURE 9: The first MOSFET-C filter with on-chip automatic tuning [19].

voltage gain larger than 1 over a range of frequencies; therefore, the equivalence cannot possibly hold in the general sense [14]. This lead to an effort to develop a theory for exact switched-capacitor analysis and properties [15], which in turn lead to the formulation of computer-aided analysis techniques and the development of general simulators for switched-capacitor circuits by two of my first Ph.D. students, Mike Fang and Ken Suyama [16, 17]. The resulting program, Switcap, became the standard switched-capacitor circuit simulator and was used at hundreds of companies and universities in the 1980s and beyond, in the design of many telecom ICs.

Integrated Continuous-Time Filters

Although switched-capacitor circuits were very successful, they required a constantly-on clock and suffered from aliasing; my view of aliasing can be summarized as in Fig. 8. My group decided to re-visit RC circuits. We replaced resistors by MOSFETs operating in the triode region, connected in such a way that their nonlinearities cancelled out [18]; Mihai Banu and I obtained a patent for this, through AT&T. We called the resulting circuits "MOSFET-C circuits", and devised techniques for their automatic tuning (Fig. 9) [19]. We worked further on this technique with John Khoury [20, 21]. The work was initially "a problem in search of a solution." Finally, years later, the golden application appeared: filters for disc drives. AT&T produced chips for this application on a massive scale.

We followed this with work on transconductance-capacitance (Gm-C) filters, particularly with Venu Gopinathan [22] and, later, with Shanthi Pavan [23]. Their chips demonstrated impressive performance at the time. We also did early work on Q-enhancement of integrated inductors [24], that made possible high-Q integrated filters in the GHz range, as part of the research of Nebojsa Stanic, Dandan Li and Shaorui Li [25, 26, 27, 28].

Then, planning ahead for the day when the only available circuit elements would be transistors, if that day ever came thanks to the advent of "digital" technology, I started wondering if we can make transistor-only filters. It turned out that this is entirely possible. One of my favorite circuits is the one shown in Fig. 10 [29]; its operation is described in the caption. The required chip area was extremely small. This type of minimal circuit is suitable for applications where a very large number of non-critical filters are needed (e.g., thousands may be needed for energy detection in a biomemetic implementation of the inner ear).

THETA2021085
IPR2023-00819
Theta EX2002

With Lih-Jiuan Pu, we later came up with a number of techniques for transistor-only filters and oscillators [30], all using the MOS transistor as a distributed RC element. John Khoury devised a method for making integrators, which have transfer functions inversely proportional to s (the Laplace transform variable), out of distributed RC elements (which have y-parameters that involve hyperbolic functions of $\sqrt{s}$) [31].

Externally Linear Circuits and Companding Signal Processors

Following the above success, I took a more general point of view and developed a theory of "externally linear, internally nonlinear" (ELIN) circuits and systems [32]. The principle of the idea is shown in Fig. 11; one starts with a linear, time-invariant prototype (top), with input $u(t)$, output $y(t)$, state variables $x(t)$, and a state description characterized by matrices A, B, C, and D. Through a time-varying linear transformation, the system is converted to an input-output equivalent one with a different state description, shown at the bottom of the figure, in which it is possible to control the internal part of the system without affecting input-output behavior. One can derive the control signal from the signal strength, and design the system so that the internal signals are large even when the input is small, to help ensure that the signal-to-noise ratio remains high. This leads to a type of externally linear systems we have called "companding signal processors" [33, 34]; it turned out that log-domain circuits, which had already been described, can be thought of as belonging to this class. Nagendra Krishnapura and Yorgos Palaskas came up with ideas for making possible companding signal processing chips, which demonstrated certain advantages, including a usable dynamic range that was much wider than that of corresponding classical processors [35, 36]. Nagendra even demonstrated filters with a power-dissipation-to-dynamic-range ratio that is below the bound predicted by well-known fundamental limits for circuits consisting of linear elements. Ari Klein later extended these techniques to DSPs [37].

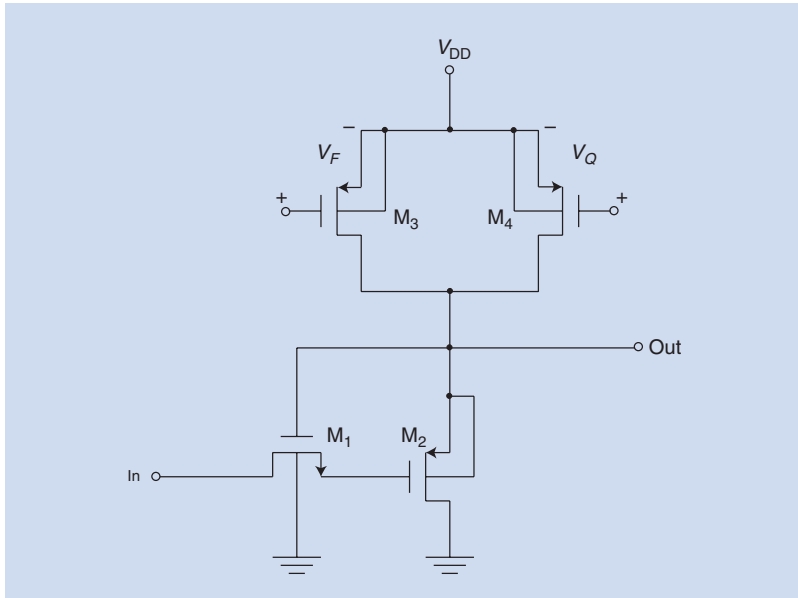

FIGURE 10: Minimal transistor-only low-pass filter [29]. Each transistor has a different function; M_1, operating in the triode region, acts as a distributed RC element; M_2 is an output buffer; the gate-source voltage of the current source M_3 controls the gate-source voltage of M_2 and thus the channel resistance of M_1, thus controlling the cutoff frequency; and the gate-source voltage of M_4, which operates in triode, controls the loop gain and thus the quality factor of the filter.

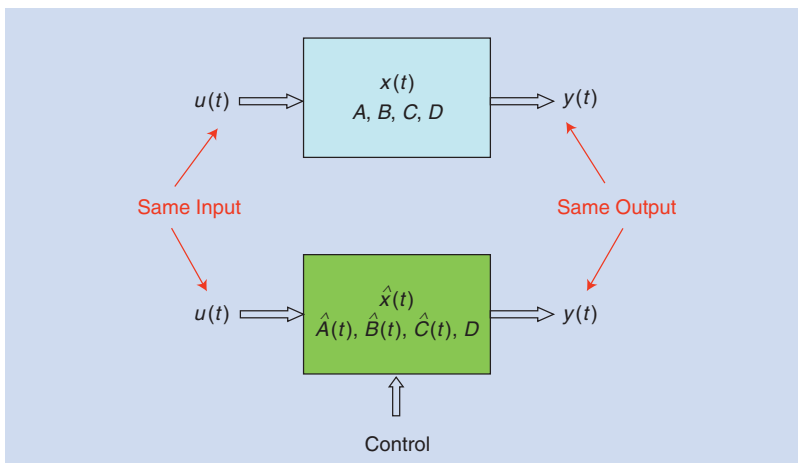

FIGURE 11: Developing externally-time-invariant and externally linear systems [32]. (a) Linear, time-invariant prototype. (b) Derived system, in which the internal variables can be controlled without affecting input-output behavior, which remains the same as that in (a); the resulting system is internally time-varying, but externally time-invariant. If the control is derived from the input, the system becomes internally nonlinear, but its input-output behavior remains linear and unchanged from that in (a).

Adaptive-Power Circuits

I have felt for a long time that, although it is necessary to dissipate power when you are doing something useful in circuits such as filters, dissipating such power when the signal does not demand it is a crime. This is more and more true today, with the need for very-low-power circuits, some even involving energy

THETA2021086
IPR2023-00819
Theta EX2002

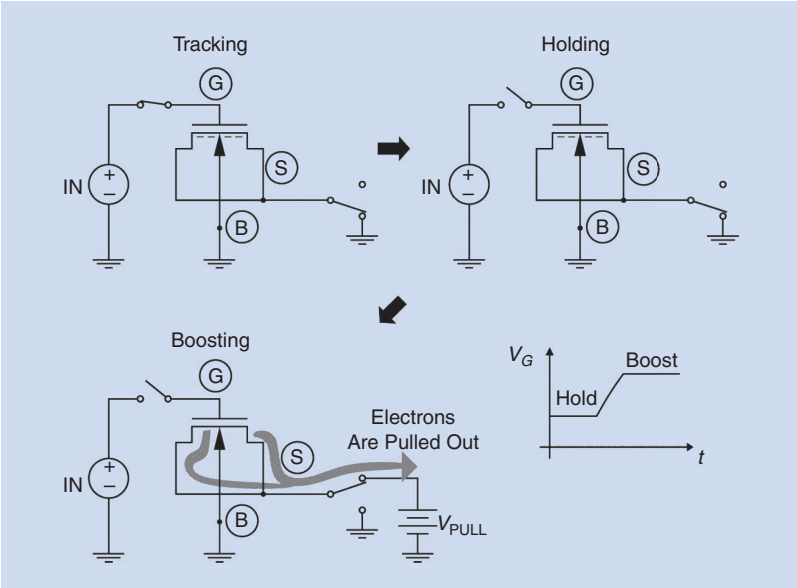

FIGURE 12: Principle of discrete-time parametric boosting [46]. By converting this to differential operation, small-signal voltage gain is obtained.

scavenging. We thus embarked on an effort to make circuits in which the power dissipation is signal-driven, i.e. it is fundamentally adaptive to the input signal [34, 38]. Mehmet Ozgun and Atsushi Yoshizawa developed several techniques for making possible adaptive power dissipation chips [39, 40].

Time-Mode Signal Processing

Switched-capacitor filters have responses that depend on two critically determining factors: timing (through a clock), and capacitance ratios. Early in my career, I wondered if this is the most minimal thing we can do; could we perhaps develop signal processors that rely *only* on timing? I found this question fundamentally important, and also of potential practical interest. As has often been the case in my work, not having funding for such research to support students, I studied this question initially on my own. The answer to the question turned out to be *yes*. An analog signal can be processed entirely in time mode. I reported this in a paper [41], explicitly pointing out the advantages of relying on time operations, rather than on amplitude ones, as VLSI technology advanced. The paper received the 1984 IEEE W. R. G. Baker Prize Award, which is given "for the most outstanding paper reporting original work in the Transactions, Journals and Magazines of the Societies and in the Proceedings of the IEEE." I was very fortunate to receive this award early in my career. It boosted my confidence, and convinced me that open-ended research was the type of research I wanted to continue pursuing. I eventually obtained funding to continue work in this area, and Dave Vallancourt did his Ph.D. in it, which culminated in fully integrated, programmable time-mode analog filters [42].

Analog and Hybrid Computation

Electronic analog computers were widely used in the 1940s and 1950s. But those computers were huge and very difficult to maintain. Digital integrated circuits made it attractive for people to turn to digital computing; this has lead to impressive technology, as a result of extensive development for over half a century by thousands of engineers. People assume that analog computers do not have anything to offer anymore, but such conclusions seem to be based on comparisons of apples to oranges. One cannot compare today's digital computers, with billions of transistors, to analog computers of half a century ago, with a few hundred vacuum tubes. So we decided to address the question, what could an analog computer do, if it were fabricated in *today's* technology, and better yet, coupled to a digital computer? Glenn Cowan, in his Ph.D. thesis work, made such an analog computer chip [43] that could solve ordinary and partial differential equations, both linear and nonlinear, with no convergence issues and faster than a digital computer. It had limited accuracy, but that is fine in some cases (our brain probably does not operate with 64-bit accuracy, either). And, it could pass the approximate solution to a digital computer, for the latter to use as a first guess and significantly speed up convergence. The technique showed promise for certain special-purpose computation tasks. We are now continuing this effort, aiming at true hybrid computers on a chip.

Current Copiers

It would seem that currents cannot be matched to a degree higher than the matching of the transistors involved. Our group found out that this does not have to be the case. Steve Daubert and Dave Vallancourt demonstrated matching improvements of an order of magnitude or more. We called the circuits "current copiers"; while this technique seems to have been discovered independently by several groups, we seem to be the group that first published the idea [44]. These circuits have been used in commercial data converters.

Discrete-Time Parametric Circuits

I have been fascinated by parametric circuits for a long time. Such circuits normally operate in continuous time. In the early eighties, I wondered if

THETA2021087
IPR2023-00819
Theta EX2002

we can make a discrete-time parametric circuit using a MOS device. We would use the device as a capacitor. Using a switch, we would sample a voltage on its gate while the channel was strongly inverted; then we would remove the electrons from the channel, by applying a suitable potential. Roughly speaking (assuming linearity for simplicity), the capacitance seen by the gate would decrease, and since the gate charge was fixed, the gate voltage would increase. I was teaching a graduate course on the operation and modeling of MOS transistors (in an attempt to understand them), and decided to give the above idea to one of the students, as a final project. He came back with a report full of analysis, claiming that the idea would not work. I could not immediately see something wrong in what he did, but his report was just math, and I knew from physical considerations that the idea was most likely correct. We put it in the back burner, and revisited it later [45]; when the opportunity came in the form of a promising Ph.D. student, Sanjeev Ranganathan, I proposed it to him for his Ph.D. He expanded on the idea and made a chip that confirmed discrete-time parametric amplification with very low power and very low noise; our resulting paper [46] received the ISSCC Lewis Winner Outstanding Paper Award. The discrete-time parametric operation principle is shown in Fig. 12.

Event-Driven, Continuous-Time Digital Signal Processors

A signal amplitude can be continuous or discrete, and so can time. If both the amplitude and the time are continuous, we have the classical analog signals and circuits, e.g. active RC filters. If both are instead discrete, we have the classical digital signals and systems. If the amplitude is continuous but the time is discrete, we have the so-called "discrete time analog" signals and circuits, e.g. switched-capacitor circuits. For a long time, I had been wondering, what do we get if we form the fourth possible combination, namely discrete amplitude together with continuous time? Whatever that was, it seemed to me that, by symmetry, it would have to be called "continuous-time digital." This symmetry is shown in Table 1.

I set out to look into what "continuous-time digital" signals, and the corresponding processors, might look like. But because of the sheer weirdness of this concept, I did not dare give it to Ph.D. students, in case it was a dead end. Finally, in the summer of 2003, I found a couple of weeks to try the idea myself. I used a continuous-time version of the well-known level-crossing sampler at the input, thus producing binary signals that were a function of continuous time (Fig. 13), and came up with a processor to process these signals in continuous time, without a clock. My resulting hastily-put-together breadboard worked. I even passed music through it; with 4 bits of resolution, it sounded much better than a 4-bit conventional, clocked digital signal processor (DSP), due to better spectral properties of the quantization error. I published this idea in the fall of the same year [47, 48]. After obtaining funding to look into this further, we set out to further validate and extend the idea. The block diagram of a voiceband continuous-time DSP designed by Bob Schell is shown in Fig. 14 [49]; no clock is used whatsoever. More recently, Christos Vezyrtzis demonstrated a flexible voiceband chip that includes automatically tuned delay lines [50], and Colin Weltin-Wu designed an event-driven ADC for use in such systems [51]. Maria Kurchuk came up with techniques for GHz-range operation, for application in programmable UWB receivers, with very small chip area (Fig. 15) [52].

TABLE 1. SIGNAL PROCESSING CATEGORIES.

TIME	AMPLITUDE	CATEGORY
Continuous	Continuous	Classical analog
Discrete	Discrete	Classical digital
Discrete	Continuous	Discrete-time analog
Continuous	Discrete	Continuous-time digital

We found that among the nice properties of systems consisting of such processors along with continuous-time ADCs and DACs, are a complete absence of aliasing, appealing spectral properties with lower in-band error, faster time response, lower EMI emissions, and, notably, power dissipation that is fundamentally adaptive to the input signal. The time duration of the individual 1's and 0's is an integral part of the signal representation (Fig. 13). This allows the signal to carry more information than classical digital signals, including asynchronous ones; the emphasis on time is consistent with the advent of technology [41], and has lead to a new form of time-mode signal processing. This processing is entirely "event-driven," with events defined by changes in the signal (there is no clock).

To convince the industrial community that this is a viable approach,

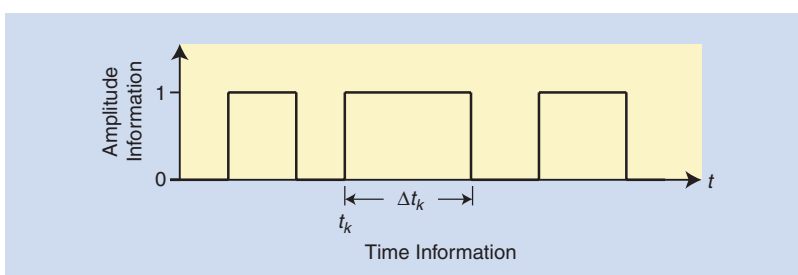

FIGURE 13: A typical signal inside a continuous-time DSP. Unlike conventional digital signals, this signal carries considerable information along the time axis.

THETA2021088
IPR2023-00819
Theta EX2002

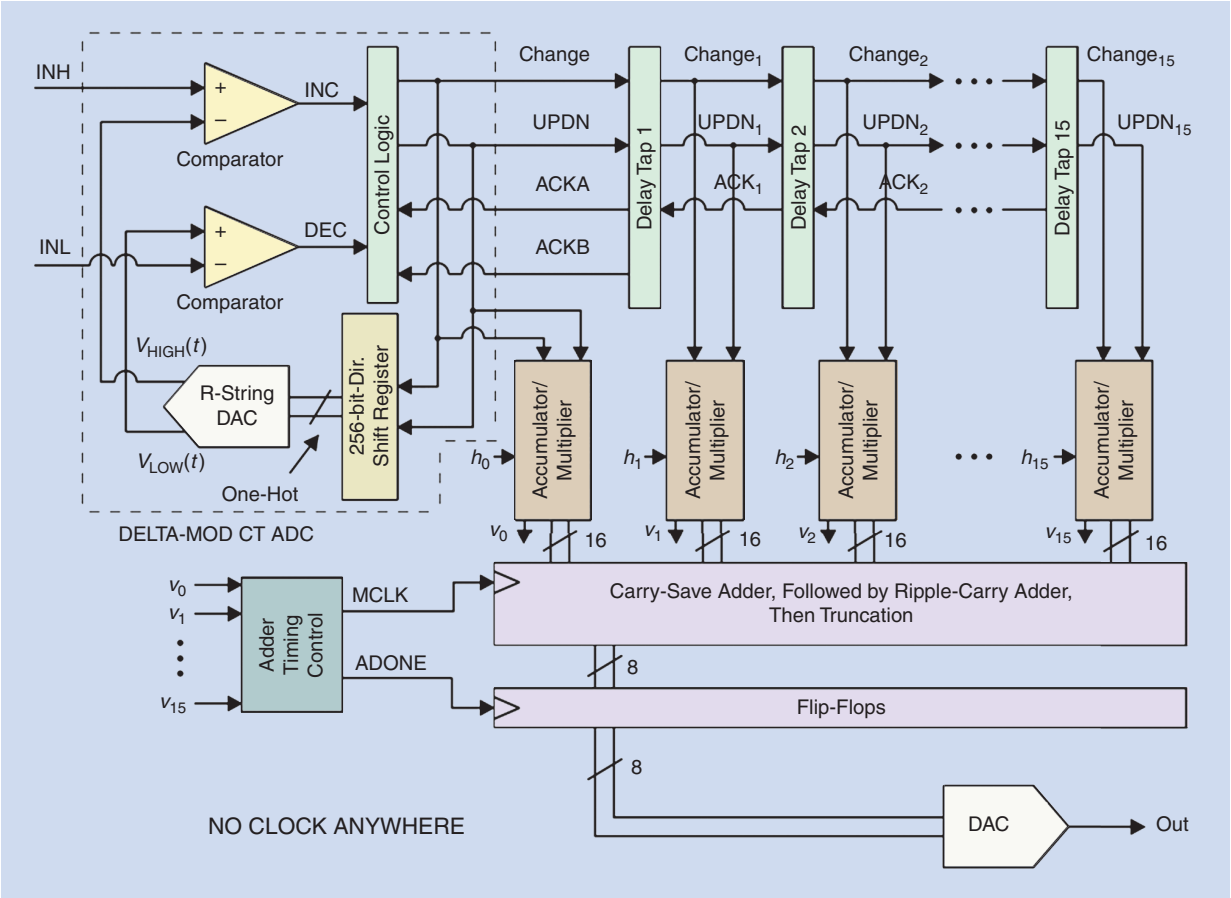

FIGURE 14: Voiceband continuous-time DSP with adaptive power dissipation [49].

complementary to that of classical DSP, has taken a lot of effort (not unlike the effort we spent trying to convince the community that integrated continuous-time filters are a viable approach). We have recently started seeing industrial interest. Continuous-time DSPs are being considered for programmable front ends in receivers, and they are part of radar chips announced by a recent startup [53]. Also, related patents for ADCs have recently been applied for by Texas Instruments [54].

The above is a selective presentation of some of our main projects over the years, and does not include all of the work done by many excellent Ph.D. students I had the pleasure of supervising and other collaborators. We have worked in a number of areas in addition to the above, including 0.5 V circuits [25, 26, 58] (an effort lead jointly with my colleague Peter Kinget), circuit fundamental limits [59], neural networks [60], fuzzy logic processors [61], MOS device modeling [62, 63] and uncommon ways to use the MOS transistor [45, 64]. We have also worked on the temperature properties of bipolar transistors [57] and on early CMOS band gap references using parasitic bipolar transistors in CMOS technology [55, 56].

The MOS Transistor Book

In the early 1980s, I decided to write a book on analog MOS integrated circuit design, and got a contract to do so with McGraw-Hill. I thought it was very important to devote a chapter to MOS transistor models, whose state at the time left much to be desired since they had been developed mostly for digital work. I set out to explain carefully how MOS transistors work, and what a good model should do. I kept writing, and pretty soon it was obvious that I could not fit everything in one chapter. So I started a second chapter. To keep a long story short, the modeling material kept growing, to the point that my editor finally said, "Why don't you make this into a book by itself?" I thought this was a good idea, and kept writing to my heart's content; my efforts to explain things revealed that some things were not well understood, so I started doing research in device modeling in parallel with the writing. The resulting book, "Operation and Modeling

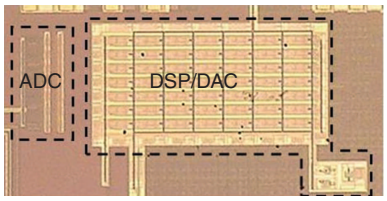

FIGURE 15: Programmable GHz-range continuous-time DSP with automatically adaptive power dissipation in 65 nm CMOS. The marked area is only 0.033 mm^2 [52].

THETA2021089
IPR2023-00819
Theta EX2002

Recollections from Yannis' Graduate Student Years at Berkeley

One of the greatest rewards of an academic career is the extended family of graduate students that one gets to become associated with both when they are students and later throughout their career. Yannis was one of my very first students; we started working together in the mid 70s just after I arrived at Berkeley. It was a fortuitous association for me and the integrated circuits group. Yannis worked first on the implementation of an operational amplifier in NMOS technology, a project that came to have real significance later on as MOS implementation of mixed signal functions evolved from laboratory curiosity to mainstream technology, and then later on he developed, working with Jacob Chaco, the companding version of the charge-redistribution ADC/DAC, which became quite important commercially in digital telephone systems around the world.

Yannis stands out in my memories of those days because of his unusually determined pursuit to understand the underlying, fundamental aspects of any particular problem he was working on. One manifestation of this was his in-depth understanding of MOS device behavior, which led later on to his book and research on MOS device modeling and behavior. Another manifestation was that, later on when the switched-capacitor technology for analog filtering became commercially important and was widely studied, his research into the early origins of work on the approach, which had long preceded our Berkeley efforts. He pointed out for example that Maxwell had suggested the possibility of switched capacitor circuits in the late 1800s. His innate curiosity and drive to reach fundamental and intuitive understanding served us well and has served him well in his remarkable career.

Yannis also contributed greatly to the sense of teamwork and camaraderie that is so important in a community of graduate students. In a research environment like Berkeley, most of the learning comes from other graduate students and not from the professors. He was an instinctively collaborative and supportive member of the team and contributed greatly to overcoming the various challenges that the group faced, especially in those early days when prototype circuits were fabricated by the students themselves in the laboratory. That lab experience was a challenge in many ways and collaboration and mutual sharing of information was essential. These same qualities have made him an outstanding teacher.

Yannis played a major part in helping us make contributions to the then very new field of MOS mixed signal circuits in those early days. Of course, he has gone on through a remarkable career to made many more important contributions, and teach a long line of his own graduate students who have gone on to notable careers. I feel very fortunate to have been associated with him.

–Paul Gray

About the Author

Paul R. Gray (pgray@berkeley.edu) was born on December 8, 1942, in Jonesboro, Arkansas. He received the B.S., M.S., and Ph.D. degrees in electrical engineering from the University of Arizona, Tucson, in 1963, 1965, and 1969, respectively.

In 1971 Dr. Gray joined the faculty of the Department of Electrical Engineering and Computer Sciences (EECS), at U.C. Berkeley, where he is now a professor emeritus. He has held several administrative posts at Berkeley, including executive vice chancellor and provost (2000–2006), dean of the College of Engineering (1996-2000), and chairman of the Department of Electrical Engineering and Computer Sciences (1990–93). His research interests have included bipolar and MOS circuit design, electro-thermal interactions in integrated circuits, device modeling, telecommunications circuits, and analog-digital interfaces in VLSI systems. Prior to joining U.C. Berkeley, he was with the Research and Development Laboratory at Fairchild Semiconductor (1969–1971) in Palo Alto, California.

Dr. Gray has served as a Councillor of the National Academy of Engineering since July 2008, and serves as a member on the Executive Committee of the NAE Council. He has serves on several corporate boards, and currently is a member of the board of trustees and Interim President of the Gordon and Betty Moore Foundation.

Dr. Gray is a Fellow of the IEEE, and has served as president of the IEEE Solid-State Circuits Council and as editor of the *IEEE Journal of Solid State Circuits*. He has received several technical achievement and education awards, including the IEEE Solid State Circuits award (1994) the IEEE James H. Mulligan, Jr. Education Medal (2004), and the IEEE Robert Noyce Medal (2008). He has been awarded honorary doctorates from the University of Bucharest in Romania (1999) and from the Swiss Federal Institute of Technology in Lausanne, Switzerland (2006).

Dr. Gray is married and has two grown sons and two grandsons.

Digital Object Identifier 10.1109/MSSC.2014.2348931
Date of publication: 12 November 2014

of the MOS Transistor," came out in 1987 [65]. I had recently the pleasure of co-authoring the third edition [66] with Colin McAndrew from Freescale. Colin's contributions have certainly made the book better; I am very glad we joined forces!

After the first edition of the book came out, I returned to the task of writing an analog MOS circuits book. This time I promised myself to be disciplined, and to limit the extent of the modeling introduction. Indeed, this time around the modeling material was shorter. But not short enough! I finally published that material, too, without the circuits, in 1996, in a small, little-known book [67] that is still used by some companies for in-house training. In the mean time several good books on analog MOS circuits had been published, so I gave up on the idea to write one myself.

Teaching

I get a distinct pleasure from explaining concepts to students, and so I have found the teaching component of my career extremely enjoyable. I

THETA2021090
IPR2023-00819
Theta EX2002

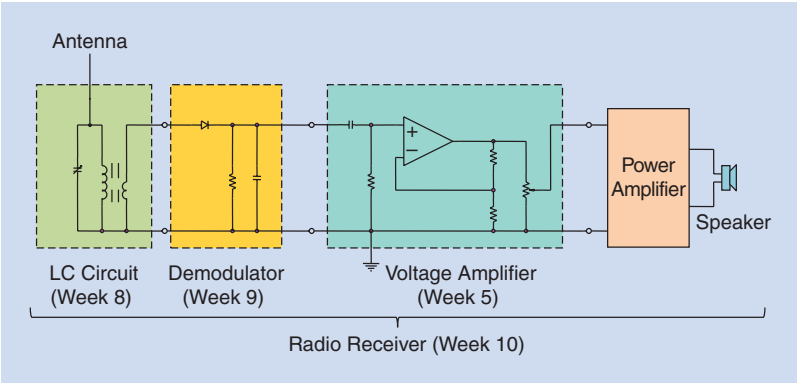

FIGURE 16: First-year students build a radio receiver in the 10th week of the lab, based on earlier experiments on op amp circuits, LC circuits, and demodulators [70].

have taught circuits to a variety of audiences, including art students at the California College of Arts and Crafts, high school students, and students in my son's first-grade class. Teaching does wonders for me; it even picks me up when I am down. It also teaches me. There is a well-known quote attributed to Einstein, "If you cannot explain it simply, you do not understand it well enough." This may not apply to all people, but it certainly applies to me (even if you leave out the "well enough" part). I cannot understand an area outside my own, unless I teach a course on it, so that I am forced to explain the concepts to others. I have learned signals and systems, semiconductor devices, digital signal processing, and communication systems by teaching the corresponding courses at Columbia. When I do this, I study from several books (anywhere from three to seven), trying to come up with my own synthesis of the subject. It takes a lot of time and effort, but it pays in the end, both for the students and for me. Early in my career, I got the following comment in one of the student evaluations: "He can probably explain everything, from tax law to organic chemistry." I smiled, and thought, "If you only knew."

In the mid-nineties, I asked my department to give me a one-semester leave from teaching, so that I could do a study to determine why students do not take well to the first circuits class, which then was, as in most places, a circuit analysis class. After studying the opinion of other educators on the matter (notably Ron Rohrer's), and interviewing students, it became evident that the problem was that today's students see circuit analysis as a bunch of equations. They have no "frame" to attach the subject to (in contrast to me and many others who had tinkered as children) and, having grown up in the age of video games, are impatient; telling them that they will find out next year how the subject can be applied doesn't do it for them. I decided to introduce a first-year course in which circuits are introduced together with electronics at a basic level, with emphasis on lab (three hours per week). In the lab sections, I tried not only to reinforce the utility of what the students were learning in the lecture, but also to encourage students to discover things – in other words, make them experience, to the extent possible, the joy hobbyists experience. It worked. In the course and lab, students build up their understanding gradually, as exemplified in Fig. 16. I published the lab manual into a small book [68], which has helped carry the approach to a number of other universities. I wrote about this experience elsewhere [69, 70], so I will not say more here. But I would like to say one thing, in order to avoid any misunderstandings: having tinkered can be a big advantage, but it is not a sufficient condition for success in our field. Neither is it necessary; some of the most-respected leaders in IC design had not tinkered as children.

I encourage students to challenge their assumptions, or rather to become aware of assumptions they are making without realizing it. I do this often by giving them puzzles. I will mention some examples. We have a 1 V source and a 50 Ω load. What is the value of the source resistance that results in maximum power transfer? Nine out of ten students answer "50 Ω." But if you do this, I tell them, you get a voltage divider, so only 0.5 V will be applied to the load. Wouldn't a 0 Ω source resistance work better, given that it would result in a 1 V load voltage, and thus more load power? They get startled when they hear this; they

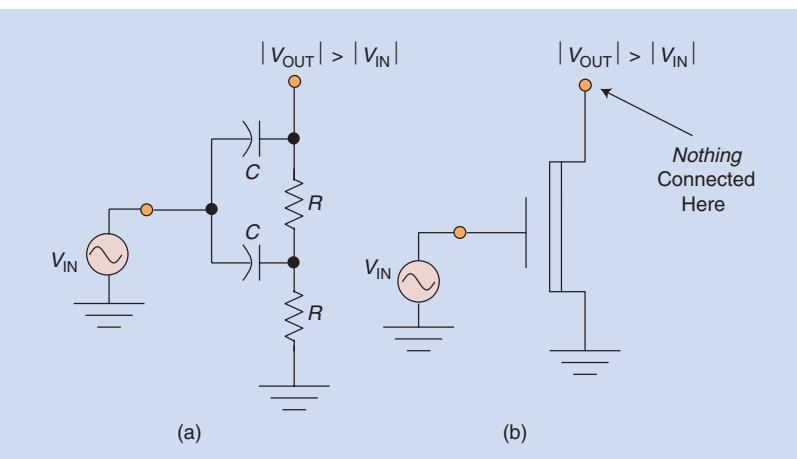

FIGURE 17: Passive circuits with voltage gain. (a) RC, (b) MOSFET. The quantities shown are phasors.

THETA2021091
IPR2023-00819
Theta EX2002

gradually work things out, and realize that they were just reproducing a result they thought they had heard, without actually understanding it, swapping source and load resistances in their head. In another puzzle, I ask them whether I can make a circuit that amplifies an AC voltage, using only resistors and capacitors; again, almost everybody says no. Then I tell them I can, and show them the circuit in Fig. 17(a). They do not believe me, but a quick simulation is enough to convince them that I am right; they get a maximum gain of about 1.08. They now have to go back and examine their pre-conceived notions that lead to their wrong answers and carefully distinguish between power gain and voltage gain. Then I ask them, "Can you make a voltage amplifier, using only a transistor, with no load and no power supply? Again, it turns out that you can, as shown in Fig. 17(b). The depletion transistor is on (you can use an enhancement transistor, but you will have to bias the gate). It operates in the triode region, and the channel, together with the gate, form a distributed RC element, which can be roughly modeled as in Fig. 17(a). When theory suggested to me that this element had voltage gain, I wanted to be sure; we had a square MOSFET fabricated, of huge size to swamp out the parasitic capacitances, and verified in the lab that it had voltage gain by itself. The interested reader can find more details in [66], pp. 516–517, footnote.)

In the beginning of 2013, Columbia wanted to understand what is involved in the so-called Massive Open Online Courses (MOOCs), and asked me to give one of the university's three pilot MOOCs on a topic of my choice. I chose the subject of MOS Transistors, and gave a MOOC through Coursera. There was a total enrollment of about 17,000 students from all over the world. Although in the course description I had emphasized that the course would be at a graduate level, people with a very wide range of backgrounds and abilities registered, from university professors to high-school students. So it was not surprising that, by the end of the course, most had dropped out, or at least stopped doing the homework and taking the exams, as is the case with MOOCs in general. It was comforting to find out later that many registrants continued to view the lectures; they just did not care to take the exams and get from Coursera a statement of accomplishment. In teaching this course, the biggest problem for me was the amount I had to spend on it, despite the help of two very able teaching assistants. The studio editing took me about five times the time it took to make the initial lecture recordings. The problem was that once I watched the recordings and found I had not explained something well, or I had made careless mistakes, I felt obliged to make corrections through elaborate editing. If I ever do a MOOC again (not soon), I will just talk and will *not* watch myself after the recordings. I left the course lectures, exercises and exams on Coursera [71], and people still take the course, only without any supervision or otherwise involvement on my part.

Some Thoughts for Students

I would like to offer some concluding thoughts, which may be of particular interest to the students among the readers of this article.

Many things in research, and life in general, are largely a matter of chance. The key is to realize that, as Pasteur has famously said, "Chance favors the prepared mind." In science and engineering the mind can be better prepared if one understands fundamental concepts well; one then must keep eyes and ears open for when the opportunity may call.

With that in mind, the thing to do is keep working at the fundamental concepts until you understand them and can use them effectively. It is true that technology changes rapidly; but concepts, if they are fundamental enough, rarely do. But do not take fundamental concepts for granted; ask yourself what are the assumptions behind them.

If all you can do is plug numbers into formulas, or follow procedures, then you are mostly wasting your time – and you are a candidate for replacement by a computer. You need to develop deep understanding and intuition – things that computers have difficulty with. Intuition will help you become creative, too.

To acquire intuition, and to learn the fundamentals meaningfully, you need to engage in active learning. It is not enough to passively attend lectures and passively read facts in a book or paper. You need to churn the results in your head, interpreting them physically and connecting them to other results until they "click". Keep asking yourself questions about what you are studying; try to re-interpret the results – see them from a different point of view. If possible, experiment or simulate, trying variations on the theme you are studying. Try to explain the results to a colleague; it is startling how often we think we understand something, until the time comes for us to explain it.

Do not just work on your topic, but rather try to find out what others may have done with it. Check the literature thoroughly. If you find that what you were planning to do has been done, you will have saved yourself considerable time and you will have avoided a possibly embarrassing situation later on, when the time comes to publish your results. Do not despair if others have done what you wanted to do; it means you are in good company. Study what they have done, and see if you can go further. Give proper attribution.

Do not worry if you make mistakes; instead, try to take advantage of them. If a circuit was not working until a few minutes ago, and now it does, do not go on happily refining the now-working circuit, but rather go back and make sure you understand why it was not working before. One can learn a lot from this. At least, this has been the case with me; it has even led me to new research topics.

Your research is not complete unless it is described to others in the community, in a thoughtful and meaningful way. In writing scientific and

THETA2021092
IPR2023-00819
Theta EX2002

technical papers, having something to say is only half the story. *How* you say it is the other half. One needs to present things logically, in as systematic a fashion as possible, in a way that does not frustrate the reader. When we write a paper, the burden is on us to explain things, and not on the reader to struggle to find out what it is we said, or worse, what it is we thought we said, but didn't.

Life is full of ups and downs. I certainly faced many downs in the first twenty-four years of my life, and many ups afterwards. If I had not persevered through the downs, I probably would not have experienced the ups. Some people get disappointed by the downs, and they give up. For others, the difficulties they face strengthen their determination. For many people, a moment comes when they sit right in the middle between giving up and going on; with a little more persistence, they can persevere and thrive. The best I can do here is to quote Calvin Coolidge: "Nothing in this world can take the place of persistence. Talent will not: nothing is more common than unsuccessful men with talent. Genius will not; unrewarded genius is almost a proverb. Education will not: the world is full of educated derelicts. Persistence and determination alone are omnipotent."

Acknowledgments

I am thankful to my professors at the University of Minnesota, who gave me opportunity and motivation; Paul Gray, for suggesting an excellent Ph.D. research topic and for being a great advisor, in general; Dave Hodges and Bob Meyer, for their contributions to my circuits education; my classmates and lab mates at Berkeley, for many stimulating discussions and their help; George Smith, who provided freedom for me to do open-ended research at Bell Labs; my colleagues at Columbia, from Omar Wing, who hired me, to Peter Kinget, with whom I have had the pleasure of collaborating; my Ph.D. students over the years, for their many contributions to the research of our group; the *IEEE Solid-State Circuits Magazine*, for giving me the opportunity to tell my story; and Mary Lanzerotti, editor of the Magazine, for her expert suggestions.

References

[1] C. A. Desoer and E. S. Kuh, *Basic Circuit Theory*. New York: McGraw-Hill, 1969.

[2] P. Gray, D. Hodges, and R. Brodersen, "Early development of mixed-signal MOS circuit technology," *IEEE Solid-State Circuits Mag.*, vol. 6, no. 2, pp. 12–17, 2014.

[3] Y. Tsividis, "Designing analog MOS circuits at Berkeley in the mid-70s," *IEEE Solid-State Circuits Mag.*, vol. 6, no. 2, pp. 22–24, 2014.

[4] Y. P. Tsividis and P. R. Gray, "An integrated NMOS operational amplifier with internal compensation," *IEEE J. Solid-State Circuits*, vol. 11, no. 6, pp. 748–753, 1976.

[5] Y. Tsividis, P. R. Gray, D. A. Hodges, and J. J. Chacko, "An all-MOS companded PCM voice encoder," in *IEEE Int. Solid-State Circuits Conf. Dig.*, 1976, pp. 24–25.

[6] (2014, July 28). IEEE, ISSCC 50th Anniversary Virtual Museum. [Online]. Available: http://sscs.ieee.org/history/isscc-50th-museum.html

[7] Y. P. Tsividis, "Design considerations in single-channel MOS analog integrated circuits—A tutorial," *IEEE J. Solid-State Circuits*, vol. 13, pp. 383–391, 1978.

[8] Y. Tsividis and D. A. Antoniadis, "A multiproject chip approach to the teaching of analog MOS LSI and VLSI," *IEEE Trans. Educ.*, vol. 25, no. 2, pp. 48–53, 1982.

[9] C. Mead and L. Conway, *Introduction to VLSI Systems*. Reading, MA: Addison-Wesley, 1980.

[10] Y. Tsividis. (2014, July 28). Edwin Armstrong: Pioneer of the airwaves. [Online]. Available: www.columbia.edu/cu/alumni/Magazine/Spring2002/Armstrong.html

[11] A. Odlyzko. (2014, July 29). The decline of unfettered research. [Online]. Available: http://www.math.washington.edu/Commentary/science.html

[12] J. C. Maxwell, *A Treatise on Electricity and Magnetism,* 3rd ed. Clarendon, 1891, vol. 2 [re-published by New York: Dover Publications, 1954].

[13] G. M. Jacobs, D. J. Allstot, R. W. Brodersen, and P. R. Gray, "Design techniques for MOS switched capacitor ladder filters," *IEEE Trans. Circuits Syst.*, vol. 25, no. 12, pp. 1014–1021, 1978.

[14] Y. Tsividis, "Analytical and experimental evaluation of a switched-capacitor filter and remarks on the resistor/switched-capacitor correspondence," *IEEE Trans. Circuits Syst.*, vol. 26, no. 2, pp. 140–144, 1979.

[15] Y. Tsividis, "Analysis of switched capacitive networks," *IEEE Trans. Circuits Syst.*, vol. 26, no. 11, pp. 935–947, 1979.

[16] S.-C. Fang, Y. Tsividis, and O. Wing, "Time- and frequency-domain analysis of linear switched-capacitor networks using state charge variables," *IEEE Trans. Comput.-Aided Design Integr. Circuits Syst.*, vol. 4, no. 4, pp. 651–661, 1985.

[17] K. Suyama, S.-C. Fang, and Y. Tsividis, "Simulation of mixed switched-capacitor/digital networks with signal-driven switches," *IEEE J. Solid-State Circuits*, vol. 25, no. 6, pp. 1403–1413, 1990.

[18] M. Banu and Y. Tsividis, "Fully integrated active RC filters in MOS technology," *IEEE J. Solid-State Circuits*, vol. 18, no. 6, pp. 644–651, 1983.

[19] M. Banu and Y. Tsividis, "An elliptic continuous-time CMOS filter with on-chip automatic tuning," *IEEE J. Solid-State Circuits*, vol. 20, no. 6, pp. 1114–1121, 1985.

[20] Y. Tsividis, M. Banu, and J. Khoury, "Continuous-time MOSFET-C filters in VLSI," *IEEE J. Solid-State Circuits*, vol. 21, no. 1, pp. 15–30, 1986.

[21] J. M. Khoury and Y. Tsividis, "Analysis and compensation of high-frequency effects in integrated MOSFET-C continuous-time filters," *IEEE Trans. Circuits Syst.*, vol. 34, no. 8, pp. 862–875, 1987.

[22] V. Gopinathan, Y. Tsividis, K.-S. Tan, and R. K. Hester, "Design considerations for high-frequency continuous-time filters and implementation of an antialiasing filter for digital video," *IEEE J. Solid-State Circuits*, vol. 25, no. 6, pp. 1368–1378, 1990.

[23] S. Pavan, Y. Tsividis, and K. Nagaraj, "Widely programmable high-frequency continuous-time filters in digital CMOS technology," *IEEE J. Solid-State Circuits*, vol. 35, no. 4, pp. 503–511, 2000.

[24] S. Pipilos, Y. Tsividis, J. Fenk, and Y. Papananos, "A Si 1.8 GHz RLC filter with tunable center frequency and quality factor," *IEEE J. Solid State Circuits*, vol. 31, no. 10, pp. 1517–1525, 1996.

[25] N. Stanic, P. Kinget, and Y. Tsividis, "A 0.5 V 900 MHz CMOS receiver front end," in *IEEE Symp. Circuits Dig. Techn. Pap. 2006*, pp. 228–229.

[26] N. Stanic, A. Balankutty, P. R. Kinget, and Y. Tsividis, "A 2.4-GHz ISM-band sliding-IF receiver with a 0.5-V supply," *IEEE J. Solid-State Circuits*, vol. 43, no. 5, pp. 1138–1145, 2008.

[27] D. Li and Y. Tsividis, "Design techniques for automatically tuned integrated gigahertz-range active LC filters," *IEEE J. Solid-State Circuits*, vol. 37, no. 8, pp. 967–977, 2002.

[28] S. Li, N. Stanic, K. Soumyanath, and Y. Tsividis, "An integrated 1.5 V 6 GHz Q-enhanced LC CMOS filter with automatic quality factor tuning using conductance reference," in *IEEE Radio Frequency Integrated Circuits Symp. Dig.* 2005, pp. 621–624.

[29] Y. P. Tsividis, "Minimal transistor-only micropower integrated VHF active filter," *Electron. Lett.*, vol. 23, no. 15, pp. 777–778, 1987.

[30] L.-J. Pu and Y. Tsividis, "Transistor-only frequency-selective circuits," *IEEE J. Solid-State Circuits*, vol. 25, no. 3, pp. 821–832, 1990.

[31] J. Khoury and Y. Tsividis, "Synthesis of arbitrary rational transfer functions in *s* using uniform distributed RC active circuits," *IEEE Trans. Circuits Syst.*, vol. 37, no. 4, pp. 464–472, 1990.

[32] Y. Tsividis, "Externally linear, time-invariant systems and their application to companding signal processors," *IEEE Trans. Circuits Syst. II*, vol. 44, no. 2, pp. 65–85, 1997.

[33] Y. Tsividis, V. Gopinathan, and L. Toth, "Companding in signal processing," *Electron. Lett.*, vol. 26, no. 17, pp. 1331–1332, 1990.

[34] Y. Tsividis, "Minimising power dissipation in analogue signal processors through syllabic companding," *Electron. Lett.*, vol. 35, no. 21, pp. 1805–1807, 1999.

[35] N. Krishnapura and Y. Tsividis, "Noise and power reduction in filters through the use of adjustable biasing," *IEEE J. Solid-State*

THETA2021093
IPR2023-00819
Theta EX2002

Circuits, vol. 36, no. 12, pp. 1912–1920, 2001.

[36] Y. Palaskas, Y. Tsividis, V. Prodanov, and V. Boccuzzi, "A 'divide and conquer' technique for implementing wide dynamic range continuous-time filters," *IEEE J. Solid-State Circuits*, vol. 39, no. 2, pp. 297–307, 2004.

[37] A. E. Klein and Y. Tsividis, "Externally linear time invariant digital signal processors," *IEEE Trans. Signal Processing*, vol. 58, no. 9, pp. 4897–4909, 2010.

[38] Y. Tsividis, N. Krishnapura, Y. Palaskas, and L. Toth, "Internally varying analog circuits minimize power dissipation," *IEEE Circuits Devices Mag.*, vol. 19, no. 1, pp. 63–72, 2003.

[39] M. T. Ozgun, Y. Tsividis, and G. Burra, "Dynamic power optimization of active filters with application to zero-IF receivers," *IEEE J. Solid-State Circuits*, vol. 41, no. 6, pp. 1344–1352, 2006.

[40] A. Yoshizawa and Y. Tsividis, "A channel-select filter with agile blocker detection and adaptive power dissipation," *IEEE J. Solid-State Circuits*, vol. 42, no. 5, pp. 1090–1099, 2007.

[41] Y. Tsividis, "Signal processors with transfer function coefficients determined by timing," *IEEE Trans. Circuits Syst.*, vol. 29, no. 12, pp. 807–817, 1982.

[42] D. Vallancourt and Y. Tsividis, "A fully programmable sampled-data analog CMOS filter with transfer-function coefficients determined by timing," *IEEE J. Solid-State Circuits*, vol. 22, no. 6, pp. 1022–1030, 1987.

[43] G. E. Cowan, R. C. Melville, and Y. Tsividis, "A VLSI analog computer/digital computer accelerator," *IEEE J. Solid-State Circuits*, vol. 41, no. 1, pp. 42–53, 2006.

[44] S. Daubert, D. Vallancourt, and Y. Tsividis, "Current-copier cells," *Electron. Lett.*, vol. 24, no. 25, pp. 1560–1562, 1988.

[45] Y. Tsividis and K. Suyama, "Strange ways to use the MOSFET," in *Proc. IEEE Int. Symp. Circuits Systems*, 1997, vol. 1, pp. 449–452.

[46] S. Ranganathan and Y. Tsividis, "A MOS capacitor-based discrete-time parametric amplifier with 1.2 V output swing and 3 μW power dissipation," in *IEEE Int. Solid-State Circuits Conf. Dig.*, 2003, pp. 406–502.

[47] Y. Tsividis, "Continuous-time digital signal processing," *Electron. Lett.*, vol. 39, no. 21, pp. 1551–1552, 2003.

[48] Y. Tsividis, "Mixed-domain systems and signal processing based on input decomposition," *IEEE Trans. Circuits Syst. I*, vol. 53, no. 10, pp. 2145–2156, 2006.

[49] B. Schell and Y. Tsividis, "A continuous-time ADC/DSP/DAC system with no clock and with activity-dependent power dissipation," *IEEE J. Solid-State Circuits*, vol. 43, no. 11, pp. 2472–2481, 2008.

[50] C. Vezyrtzis, W. Jiang, S. M. Nowick, and Y. Tsividis, "A flexible, clockless digital filter," in *Proc. European Solid-State Circuits Conf.*, 2013, pp. 65–68.

[51] C. Weltin-Wu and Y. Tsividis, "An event-driven clockless level-crossing ADC with signal-dependent adaptive resolution," *IEEE J. Solid-State Circuits*, vol. 48, no. 9, pp. 2180–2190, 2013.

[52] M. Kurchuk, C. Weltin-Wu, D. Morche, and Y. Tsividis, "Event-driven GHz-range continuous-time digital signal processor with activity-dependent power dissipation," *IEEE J. Solid-State Circuits*, vol. 47, no. 9, pp. 2164–2173, 2012.

[53] Novelda AS. (2014, July 28). Novelda. [Online]. Available: https://www.novelda.no

[54] G. Thiagarajan, U. Dasgupta, and V. Gopinathan, "Asynchronous analog-to-digital converter," U.S. patent application 20140062734, Mar. 6, 2014.

[55] Y. Tsividis and R. W. Ulmer, "A CMOS voltage reference," *IEEE J. Solid-State Circuits*, vol. 13, no. 6, pp. 774–778, 1978.

[56] R. Ye and Y. Tsividis, "Bandgap voltage reference sources in CMOS technology," *Electron. Lett.*, vol. 18, no. 1, pp. 24–25, 1982.

[57] Y. Tsividis, "Accurate analysis of temperature effects in I_C–V_{BE} characteristics with application to bandgap reference sources," *IEEE J. Solid-State Circuits*, vol. 15, no. 6, pp. 1076–1084, 1980.

[58] S. Chatterjee, Y. Tsividis, and P. Kinget, "0.5-V analog circuit techniques and their application in OTA and filter design," *IEEE J. Solid-State Circuits*, vol. 40, no. 12, pp. 2373–2387, 2005.

[59] G. Efthivoulidis, L. Toth, and Y. P. Tsividis, "Noise in Gm-C filters," *IEEE Trans. Circuits Syst. II*, vol. 45, no. 3, pp. 295–302, 1998.

[60] S. Satyanarayana, Y. P. Tsividis, and H. P. Graf, "A reconfigurable VLSI neural network," *IEEE J. Solid-State Circuits*, vol. 27, no. 1, pp. 67–81, 1992.

[61] S. Bouras, M. Kotronakis, K. Suyama, and Y. Tsividis, "Mixed analog-digital fuzzy logic controller with continuous-amplitude fuzzy inferences and defuzzification," *IEEE Trans. Fuzzy Syst.*, vol. 6, no. 2, pp. 205–215, 1998.

[62] Y. Tsividis, "Moderate inversion in MOS devices," *Solid-State Electron.*, vol. 25, no. 11, pp. 1099–1104, 1982.

[63] M. Bagheri and Y. Tsividis, "A small signal dc-to-high-frequency nonquasistatic model for the four-terminal MOSFET valid in all regions of operation," *IEEE Trans. Electron Devices*, vol. 32, no. 11, pp. 2383–2391, 1985.

[64] K. Vavelidis, Y. Tsividis, F. Op't Eynde, and Y. Papananos, "Six-terminal MOSFET's: Modeling and applications in highly linear, electronically tunable resistors," *IEEE J. Solid-State Circuits*, vol. 32, no. 1, pp. 4–12, 1997.

[65] Y. Tsividis, *Operation and Modeling of the MOS Transistor*. New York: McGraw-Hill, 1987.

[66] Y. Tsividis and C. McAndrew, *Operation and Modeling of the MOS Transistor*, 3rd ed. London, U.K.: Oxford Univ. Press, 2011.

[67] Y. Tsividis, *Mixed Analog-Digital VLSI Devices and Technology*. Singapore: World Scientific, 2002.

[68] Y. Tsividis, *A First Lab in Circuits and Electronics*. Hoboken, NJ: Wiley, 2002.

[69] Y. Tsividis, "Some thoughts on introducing today's students to electrical engineering," *IEEE CAS Newsletter*, vol. 9, no. 1, p. 1, 1998.

[70] Y. Tsividis, "Turning students on to circuits," *IEEE Solid-State Circuits Soc. Newsletter*, vol. 13, no. 1, pp. 6–9, 2008.

[71] Y. Tsividis. (2014, July 28). MOS transistors. [Online]. Available: https://www.coursera.org/course/mosfet

Biography

Yannis Tsividis (tsividis@columbia.edu) (S'71—M'74—SM'75—F'86—LF'12) received the B.E.E. degree from the University of Minnesota, Minneapolis, and the M.S. and Ph.D. degrees from the University of California, Berkeley, in 1972, 1973, and 1976, respectively.

He is Edwin Howard Armstrong Professor at Columbia University, New York, NY. He has worked at Motorola Semiconductor and AT&T Bell Laboratories, and has taught at the University of California, Berkeley and the National Technical University of Athens. He was a visiting Professor at MIT in 1980, and at the University of Paris 6 in 2008.

He has written the books *Operation and Modeling of the MOS Transistor* (3d edition, co-authored with Colin McAndrew, Oxford University Press, 2011); *Mixed Analog-Digital VLSI Devices and Technology: An Introduction*, World Scientific, 2002; and *A First Lab in Circuits and Electronics* (John Wiley and Sons, New York, 2002). He has co-edited several books.

He was made Professor Honoris Causa at the University of Patras, Greece, in 2012, and received the Outstanding Achievement Award from the University of Minnesota, Minneapolis, in 2013. He has received the 1984 IEEE W.R.G. Baker Award for the best IEEE publication, and is recipient or co-recipient of best paper awards from the European Solid-State Circuits Conference in 1986, the IEEE International Solid-State Circuits Conference in 2003, and the IEEE Circuits and Systems Society (Darlington Award, 1987; Guillemin-Cauer Award, 1998 and 2008). He has received the Great Teacher Award from the Society of Columbia Graduates in 1991, the Distinguished Faculty Teaching Award from the Columbia Engineering School Alumni Association in 1998 and 2010, and Columbia's Presidential Award for Outstanding Teaching in 2003. He has received an IEEE CAS Golden Jubilee Medal in 2000, the IEEE Undergraduate Teaching Award in 2005, and the IEEE Circuits and Systems Education Award in 2010. He is a Life Fellow of the IEEE, and received the IEEE Gustav Robert Kirchhoff Award in 2007.

THETA2021094
IPR2023-00819
Theta EX2002

Nagendra Krishnapura and Shanthi Pavan

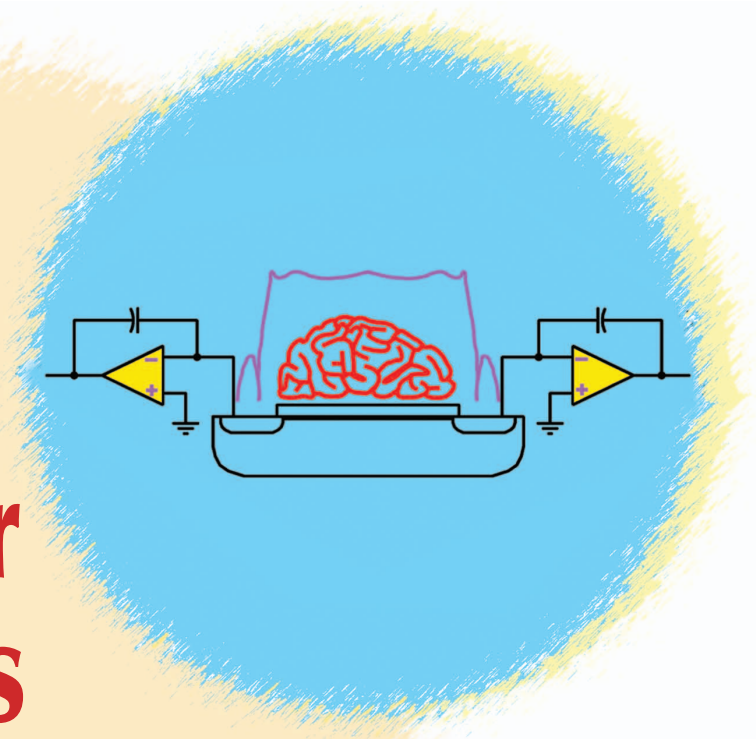

A Mind for all Seasons

It is always fascinating to follow (and learn from) the scientific contributions of an accomplished researcher, particularly so when one works in the same area. Over four decades, Yannis Tsividis has made substantial contributions to circuits and systems at several levels: device modeling, circuit simulation methods, integrated circuit design, and signal processing techniques—each one an area on which an entire academic career could possibly be spent. During his PhD and for several years thereafter, he contributed to several IC designs, starting from the first integrated MOS opamp [1]. Then, while investigating bandgap references and starting to write a book on circuits, he made his foray into device modeling, mainly of the MOS transistor. This work, spanning seven years culminated in the famous book, "Operation and Modeling of the MOS Transistor", now in its third edition [2]. Around the late seventies, switched-capacitor filters began finding widespread use in the telecom industry. Yannis started investigating analysis methods for switched-capacitor networks which eventually resulted in SWITCAP[3-6], a popular and highly efficient tool for simulating switched capacitor circuits. In the early 1980s, he began working on continuous-time filters—an area that received bulk of his attention for the next two decades. In the last decade, he has been investigating continuous-time digital signal processing, wherein analog signals are quantized and processed without being sampled [7]. This has led to a number of techniques and offshoots into other areas of electronics [8].

It is our opinion that Yannis gets a kick out of doing exactly those things that others believe cannot be done. We can think of several such instances throughout his career—starting from making the first opamp with MOS transistors, which were thought to be good only for logic (so you are going to make an opamp using switches ??). When switched-capacitor techniques, where transfer functions depended on timing and capacitor ratios, were in vogue, he wondered if would be possible to create systems with transfer functions depended only on timing [9]. Another branch-off from switched capacitor filters was towards continuous-time filters, which were widely realized using discrete components, but were difficult to implement on MOS ICs in those days. This work resulted in improved theoretical understanding [10, 11] of filters,

In his distinguished career, Yannis has been an exemplary scholar, researcher, and teacher.

Digital Object Identifier 10.1109/MSSC.2014.2348932
Date of publication: 12 November 2014

THETA2021095
IPR2023-00819
Theta EX2002

> ***[Yannis] seems to have a talent for fishing out very old references, for instance, books in Russian, written in the sixties, or earlier!—all this, before the days of Google.***

as well as designs which improved upon the state of the art [12]. When faced with the fundamental tradeoff between dynamic range and power, he turned to companding techniques—the result was several filters that achieved high dynamic range [13, 14] while consuming orders of magnitude lower power dissipation.

An aspect of his work that really stands out is his dogged determination to get to the bottom of things, and pursue something to its logical conclusion. His work on the MOS parametric amplifier is a case in point. The story goes that after having come up with the idea, he asked a student to investigate this in the late eighties—a time when accurate MOS transistor models suited for analog design were not yet available, and the student concluded that "this wouldn't work". Unconvinced, Yannis made an early version of the amplifier, first reported at ISCAS [15]. This turned out to be the foundation for a paper that received the best paper award at ISSCC several years later [16].

A characteristic of his papers is the rigor of analysis, without an excess of algebra. We believe that this comes from his having thought long and hard about the topic at hand and having developed a high level of intuition about the same. Well before meeting him in person, one of us had read a testimony to his uncanny intuition as a footnote in a paper [17] by Martin and Sedra, themselves accomplished engineers in this area. The footnote, simultaneously amusing and inspiring, reads "The authors would like to acknowledge Dr. Y. P. Tsividis, who in a private conversation, was largely responsible for convincing them of this fact before the present analysis was carried out."

Another characteristic of his publications is the long list of references. He is extremely conscientious about acknowledging all those who came before. Moreover, he seems to have a talent for fishing out very old references, for instance, books in Russian, written in the sixties, or earlier!—all this, before the days of Google. One of us, who investigated power amplifiers for a while, was handed a thesis in French to read!

Yannis typically worked with few graduate students at a time, unlike many of his well-known contemporaries. His was not a group working towards a single goal, usually the one considered important by the industry (and most of the academic community) at that particular time. Each of his students would be working on problems quite different from that of the others. The starting point for some students would be Yannis' own analysis or a short paper foraying into an unknown area. Far from being a manager-professor, he has been personally technically active throughout his career. He is the sole or the first author of about a third of his two hundred odd publications. Of the numerous awards he has won, the two Guillemin-Cauer awards and the WRG Baker prize have been his alone.

Our interaction with Yannis was during our graduate student years

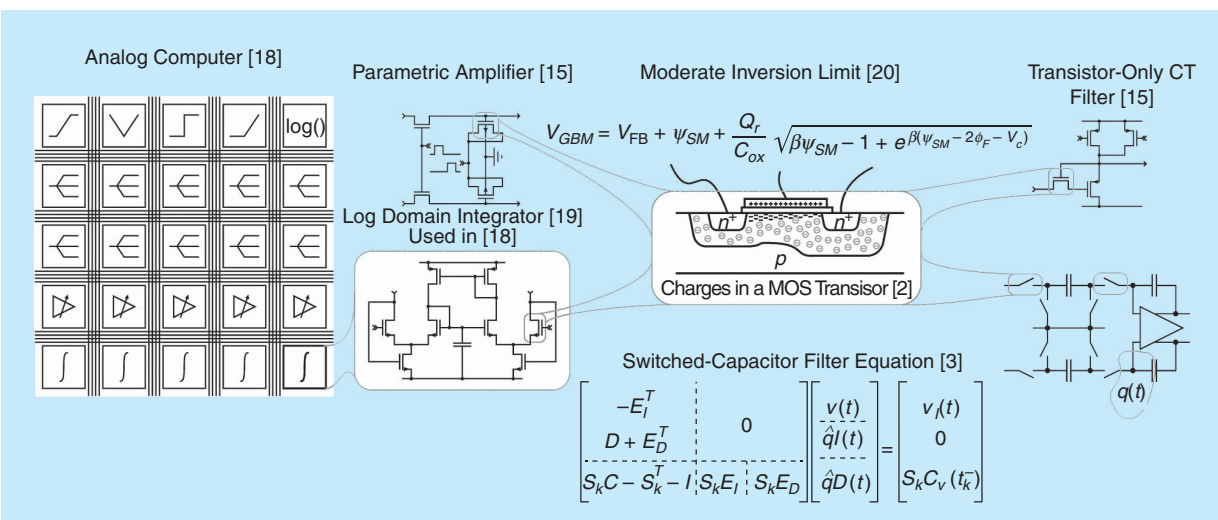

FIGURE 1: Yannis and his students worked on diverse topics. Starting from circuit design, they moved both "upwards", towards systems and circuit simulators, as well as "downwards" towards the MOS transistor.

THETA2021096
IPR2023-00819
Theta EX2002

An aspect of his work that really stands out is his dogged determination to get to the bottom of things, and pursue something to its logical conclusion.

in the late 1990s. While giving us a great deal of freedom to choose our thesis topics and work on them in our own way, he nonetheless stayed very much in touch with the technical details. The biggest impact he had on our work was to enforce rigor in our thinking. This reduced the likelihood of deceiving oneself, a common occurrence in research when one is trying to achieve a difficult outcome. Another was the clarity he insisted on in our writings describing our work. Both of us remember the first drafts of our early papers returned after being nearly doused in red ink! The ability to see our own writings from an outsider's perspective in order to free them from unstated assumptions, skipped steps, and other annoying aspects of a beginner researcher's paper is something he tried to drill into all his students.

Besides technical discussions on our research, our group meetings usually involved some circuit brainteasers from Yannis. These were usually based on unexpected aspects of simple circuits. For example, we remember at first being skeptical of achieving gain greater than unity with only a passive-RC network, only to say aah-of course, after being shown the "trick" a few minutes later [15]. The diversity in his work (Fig. 1) meant that his students were necessarily exposed to a broad range of ideas during group meetings-something for which we are now grateful.

In his distinguished career, Yannis has been an exemplary scholar, researcher, and teacher. He has pushed the envelope of integrated circuits and systems by lasting contributions to both mainstream areas such as switched capacitor and continuous-time filters, and MOS modeling as well as more esoteric ones like companding, continuous-time digital signal processing, and analog computing [18]. He has inspired a large number of students through his teaching. It has been a privilege for us to have worked with him.

References

[1] Y. P. Tsividis and P. R. Gray, "An integrated NMOS operational amplifier with internal compensation," *IEEE J. Solid-State Circuits*, vol. 11, no. 6, pp. 748–753, Dec. 1976.

[2] Y. Tsividis and C. McAndrew, *Operation and Modeling of the MOS Transistor*, 3rd ed. London, U.K.: Oxford Univ. Press, 2010.

[3] Y. Tsividis, "Analysis of switched capacitive networks," *IEEE Trans. Circuits Syst.*, vol. 26, no. 11, pp. 935–947, Nov. 1979.

[4] S. C. Fang, Y. P. Tsividis, and O. Wing, "SWITCAP: A switched-capacitor network analysis program Part I: Basic features," *Circuits Syst. Mag.*, vol. 5, no. 3, pp. 4–10, Sept. 1983.

[5] S. C. Fang, Y. P. Tsividis, and O. Wing, "SWITCAP: A switched-capacitor network analysis program Part II: Advanced applications," *Circuits Syst. Mag.*, vol. 5, no. 4, pp. 41–46, Dec. 1983.

[6] K. Suyama, S. C. Fang, and Y. P. Tsividis, "Simulation methods for mixed switched-capacitor/digital networks with signal-driven switches," *IEEE J. Solid-State Circuits*, vol. 25, no. 6, pp. 1403–1423, Dec. 1990.

[7] B. Schell and Y. Tsividis, "A continuous-time ADC/DSP/DAC system with no clock and with activity-dependent power dissipation," *IEEE J. Solid-State Circuits*, vol. 43, no. 11, pp. 2472–2481, Nov. 2008.

[8] Z. Zhao and A. Prodic, "Continuous-time digital controller for high-frequency DC-DC converters," *IEEE Trans. Power Electron.*, vol. 23, no. 2, pp. 564–573, Feb. 2008.

[9] Y. Tsividis, "Signal processors with transfer function coefficients determined by timing," *IEEE Trans. Circuits Syst.*, vol. 29, no. 12, pp. 807–817, Dec. 1982.

[10] J. M. Khoury and Y. Tsividis, "Synthesis of arbitrary rational transfer functions in s using uniform distributed RC active circuits," *IEEE Trans. Circuits Syst.*, vol. 37, no. 4, pp. 464–472, Apr. 1990.

[11] G. Efthivoulidis, L. Toth, and Y. P. Tsividis. "Further results for noise in active RC and MOSFET-C filters," *IEEE Trans. Circuits Syst. II: Analog Digital Signal Process.*, vol. 45, no. 9, pp. 1311–1315, Sept. 1998.

[12] S. Pavan, Y. Tsividis, and K. Nagaraj, "Widely programmable high-frequency continuous-time filters in digital CMOS technology," *IEEE J. Solid-State Circuits*, vol. 35, no. 4, pp. 503–511, Apr. 2000.

[13] N. Krishnapura and Y. Tsividis, "Noise and power reduction in filters through the use of adjustable biasing," *IEEE J. Solid-State Circuits*, vol. 36, no. 12, pp. 1912–1920, Dec. 2001.

[14] Y. Palaskas, Y. Tsividis, and V. Boccuzzi, "A power efficient channel selection filter/coarse AGC with no range switching transients," in *Proc. 2003 Custom Integrated Circuits Conf.*, San Jose, CA.

[15] Y. Tsividis and K. Suyama, "Strange ways to use the MOSFET," in *Proc. 1997 Int. Symp. Circuits and Systems*, Hong Kong, vol. 1, pp. 449–452.

[16] S. Ranganathan and Y. Tsividis, "A MOS capacitor-based discrete-time parametric amplifier with 1.2 V output swing and 3 μW power dissipation," in *Proc. 2003 Int. Solid-State Circuits Conf.*, San Francisco, CA, pp. 406–407.

[17] K. Martin and A. S. Sedra, "Effects of the op amp finite gain and bandwidth on the performance of switched-capacitor filters," *IEEE Trans. Circuits Syst.*, vol. 28, no. 8, pp. 822–829, Aug. 1981.

[18] G. E. R. Cowan, R. C. Melville, and Y. Tsividis, "A VLSI analog computer/digital computer accelerator," *IEEE J. Solid-State Circuits*, vol. 41, no. 1, pp. 42–53, Jan. 2006.

[19] M. Punzenberger and C. Enz, "A 1.2-V low power BiCMOS class AB log-domain filter," *IEEE J. Solid-State Circuits*, vol. 32, no. 12, pp. 1968–1978, Dec. 1997.

[20] Y. Tsividis, "Moderate inversion in MOS devices," *Solid-State Electron.*, vol. 25, no. 11, pp. 1099–1104, Nov. 1982.

About the Authors

Nagendra Krishnapura received his Ph.D. from Columbia University in 1996 and is currently an associate professor in the Department of Electrical Engineering at the Indian Institute of Technology Madras, Chennai, India.

Shanthi Pavan received his PhD from Columbia University in 1995 and is currently a professor in the Department of Electrical Engineering at the Indian Institute of Technology Madras, Chennai, India.

SSC

THETA2021097

IPR2023-00819
Theta EX2002

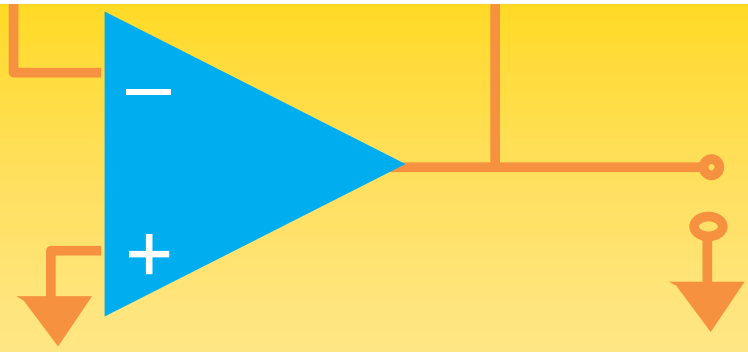

Yannis Tsividis' Early Contributions to MOS Filters

John Khoury and Mihai Banu

In the 1970s, when the bipolar transistor was the undisputed king of analog integrated circuits (ICs), most electrical engineers regarded the MOS transistor as a second-rate device for ICs: it was a good switch, but a mediocre amplifier. As a graduate student at UC Berkeley, under the supervision of Paul Gray, Yannis Tsividis had a very different vision. He saw the MOS transistor as the future star for mixed-signal ICs and was excited to prove to the world he was right. The opening gambit was his thesis work demonstrating the first fully-integrated MOS opamp [1]. This single achievement propelled him to the top of his generation of researchers and earned him a Berkeley PhD degree, a teaching appointment at Columbia University and a consulting position at Bell Laboratories.

The co-inventor of CCDs and later Nobel Prize laureate, George Smith, recruited Yannis to Bell Labs to continue his outstanding research in MOS mixed-signal ICs. Smith's vision was to unravel the device physics and fabrication methods for scaling MOS technology to 1 micron line widths and below. It was a perfect match and they became important players in making their common vision a reality. With his research at Columbia and in close collaboration with Bell Labs, Yannis invented and demonstrated new MOS circuit design methods. [2–4, 6–9].

Digital Object Identifier 10.1109/MSSC.2014.2347772
Date of publication: 12 November 2014

Yannis always had analog circuits close to his heart. Yet back in the 1980's designing with MOS transistors was seriously impeded by a lack of accurate transistor models, particularly for small-signal operation. He exposed the weaknesses of the transistor models and was the leading advocate to greatly improve them for mixed-signal circuit design [4]. When he sat down to write his textbook on CMOS mixed-signal design in 1981, the first planned chapter in the book was an introduction to the MOS transistor. For several years he kept adding transistor modeling material to this first chapter, performing more device investigations and adding the latest research results from industry and academia. From this introductory chapter was born the world's best reference book for the MOS transistor [5], an achievement that is maintained to this day. It may sound ironic that such a superb textbook was written by a circuit designer and not by a device or a compact modeling expert, but perhaps not surprising because who else would understand the building block of circuits better than a master in the art of design?

Yannis has contributed to many areas of MOS circuit design and analysis, but in this article we only provide highlights of his early work in MOS filter design. He has made seminal contributions to continuous-time filters, filters that depend only on timing, companding filters and recently continuous-time DSPs. We will focus primarily on his contributions to continuous-time filters.

Filters are a fundamental component in virtually all electronic systems. In ICs at lower frequencies inductors

1943-0582/14©2014IEEE

THETA2021098
IPR2023-00819
Theta EX2002

are impractical so filters were typically constructed with resistors, capacitors and opamps. A major problem with CMOS technology is that the RC products vary by up to +- 40% over process and temperature variations. (In the early 1980s, switched-capacitor filters were gaining traction, but they were still a bit odd since they had to be synthesized in the Z-domain, suffered from aliasing and were generally a strange new beast for traditional analog IC engineers.) A method to tune the RC time constants was thus necessary. If a variable linear resistor could be created, a traditional active RC filter could be realized with fixed capacitors (double-poly structures at the time) and each R replaced with this newly invented element.

Yannis challenged his doctoral student at the time, to find a way to use the MOS transistor as a floating variable linear resistor. Use of a FET in the triode region with zero drain-to-source voltage as a variable resistance controlled by the gate voltage, had been used for many years in AGC circuits. However, the I-V characteristics of the drain-source resistor exhibits a very large and undesirable second-order nonlinearity. After much analysis of the MOS transistor's nonlinear I-V characteristics using the 3/2 power model and its Taylor series expansion, a solution was created [6] as shown in Figure 1. To suppress the even-order nonlinearities, two matched transistors are used and the resistance control voltage on the gate (and body) is made signal dependent, but the gate-to-source (or gate-to-drain voltage) of each of the matched transistors is fixed to minimize modulation of the channel resistance. (Although it is not shown, the floating ideal voltage sources can be realized with source followers, in practice.) Although a viable solution was found, it was complicated and Yannis felt a simpler approach could be found. Yannis posed the question: "Do we need to linearize element-by-element or is there a more general technique?"

MOSFET-C filters were invented [7, 8] to avoid element-by-element linearization. The basic building block of an active-RC state-variable filter is the Miller integrator shown in Figure 2(a). One can simply replace the resistor with a MOS transistor operating in triode region as in Figure 2(b) to enable tunability, but the filter will operate linearly only for small signals. Large signals will cause significant second-order nonlinearity to appear at the output. A Taylor-series expansion of the channel current for zero drain-to-source voltage is of the form:

$$I_{ds}(V_{ds}) = \frac{V_d - V_s}{R} + k_2\left(V_d^2 - V_s^2\right) + \text{high-order terms} \quad (1)$$

Examining the expression for the drain current when the opposite polarity drain-to-source voltage is applied, the drain current has the opposite linear component as in (1), but the second-order (and all even-order) nonlinearities are identical. Therefore, if the two currents are subtracted all even-order nonlinearities will cancel. The remaining odd-order nonlinearities will not cancel, but for the MOSFET, they are low enough for many applications.

Now the challenge for Yannis and his doctoral student was to create a circuit that implemented this subtraction. Their solution, the MOSFET-C integrator [7, 8], is shown in Figure 2(c). By using matched transistors and operating the circuit fully-balanced, all even-order nonlinearities cancel. Internally the circuit is nonlinear, but from the input-output terminals the circuit behaves linearly. (Note that companding filters, log-domain filters and other techniques that were developed later exhibit this internally nonlinear, externally linear behavior.) The transistors' strong second-order nonlinearity causes the summing node inputs of the opamp to have a common-mode signal at the second-harmonic of the input signal.

The MOSFET-C filter solution was extremely elegant: One simply had to build a classical active RC state-variable filter, then convert the design to a balanced structure and replace each resistor with a MOS transistor [7, 8]. There are two caveats. At the time this approach was developed, virtually all IC circuits were single-ended. Also, this structure required balanced topologies, not just differential topologies. Although topologically a balanced circuit looks like a differential one, the MOSFET-C filters required far superior opamp output common-mode control in contrast to the differential switched-capacitor filters that were emerging at the time. In the early 1980s, design of balanced and differential amplifiers was a relatively new phenomenon so there was considerable confusion and misunderstanding. To alleviate this issue, Tsividis' group published a paper detailing the design approach to be used for two-stage and folded-cascode balanced opamps [9]. The notable feature of the two-stage opamp, shown in Figure 3, is the common-mode feedback loop. The common mode is detected at the connection of the two identical resistors (the two capacitors are added for high

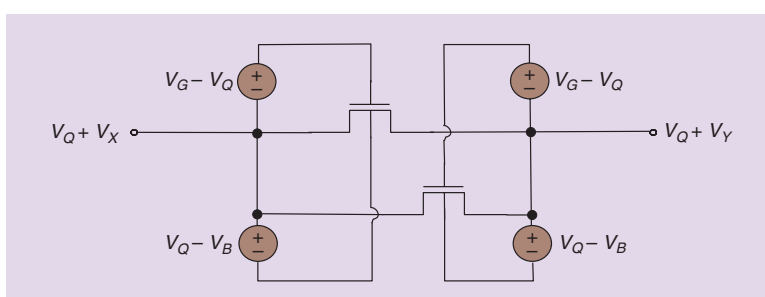

FIGURE 1: Linearization a single MOS transistor around zero drain-to-source voltage.

THETA2021099
IPR2023-00819
Theta EX2002

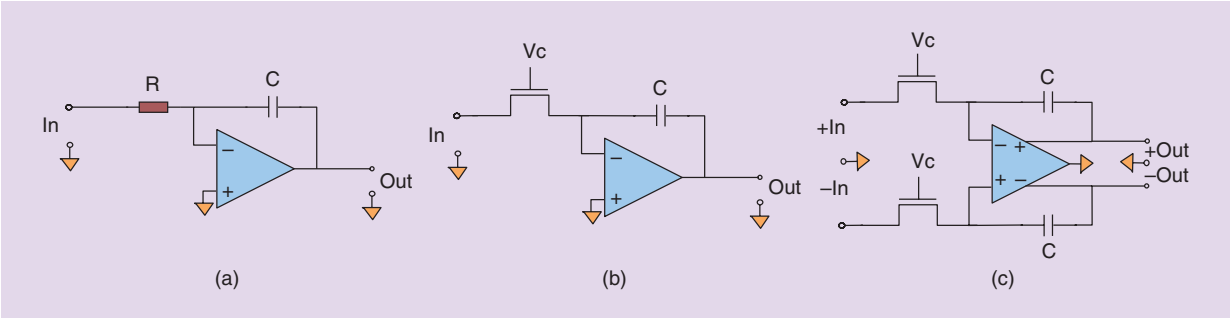

FIGURE 2: Continuous-time active integrators: (a) active-RC integrator implemented with linear resistor, (b) active-RC integrator implemented with MOSFET in triode operating as a variable resistor and (c) MOSFET-C Integrator.

frequency stability) and the modified differential pair on the left side measures the common-mode error and applies feedback to the first stage of the opamp with separate current *and* voltage feedback paths. This topology achieves a common-mode closed-loop bandwidth that approximates the differential-mode bandwidth of the amplifier. High common-mode bandwidth is required for accurate output balancing at the signal frequency to maintain linearity. (In contrast, switched-capacitor filters at that time often used common-mode feedback loops with bandwidths at least one order-of-magnitude lower than the differential bandwidth.). This balanced opamp and variations of it have been widely adopted by the IC industry.

Since Yannis was consulting regularly at Bell Labs during this time, he approached the product development group and explained the significant benefits of the intuitive and easy to design MOSFET-C filters for IC audio signal processing circuits such as CODECs or MODEMs. Unfortunately, by that time the engineers had finally learned to make switched-capacitor filters work properly, so the change to MOSFET-C filters never materialized. However, a few short years later at Bell Labs and elsewhere, MOSFET-C and other types of continuous-time filters found widespread commercial success in the emerging CMOS read channels for hard disk drives [10]. These applications required corner frequencies in the 10's of MHz and moderate linearity and were the perfect problem to be solved by the MOSFET-C solution. Today the corner frequencies are in the 100's of MHz and the yearly revenue from these ICs is in the hundreds of millions of dollars.

Although Yannis was recognized for his invention of MOSFET-C filters, his group also contributed to Gm-C filters, a competing technique at the time. Gm-C filters have the potential benefit of wider bandwidth and lower power dissipation due to their open-loop operation. However, achieving linear operation for large-signal swings is a formidable problem. Yannis and his group, returned to the trusted MOS transistor, and determined that a differential pair degenerated with a triode-operated MOS transistor rejects all even-order nonlinearity if the drain and source voltages are the negative of each other in a balanced fashion (see equation (1)). If two degenerated differential pairs are cross-coupled, as shown in Figure 4, *all* nonlinear terms vanish and the sole remaining term is linear provided that the two control voltages are not equal [11]. Transconductance tuning is achieved with the difference between the gate control voltages. His group used this transconductor and variations of it to create Gm-C continuous-time filters in the 4 MHz frequency range for video processing [12] and in the 15 MHz range for disk-drive read channels [13].

Continuous-time filters clearly were finding their niche in the early 1990s for disk drive and video applications; however, during the RF CMOS development surge in 1990's a new tact was required. As inductors became practical at 1 GHz and above, Tsividis' group continued to innovate with continuous-time filters, but now added inductors into the design approach. The basic concept was to use RLC filters with some positive feedback via a

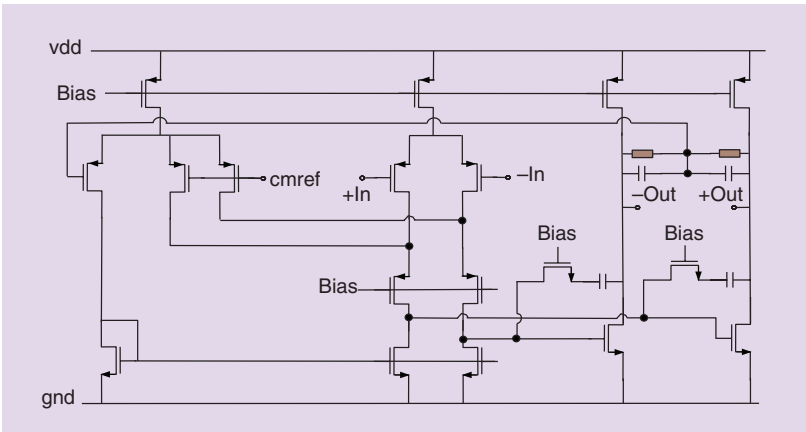

FIGURE 3: Two-stage fully-balanced opamp.

THETA2021100
IPR2023-00819
Theta EX2002

transconductor to enhance the Q of a bandpass filter. The concept is similar to oscillator design, except that the Q enhancement must be well controlled to achieve the desired bandwidth. Tsividis' group produced several filters in this area that were applicable to RFIC transmit filters [14, 15]. They also explored several new tuning approaches to move the state-of-the art forward in master-slave tuning [15].

Early in his career at Columbia, Yannis asked a fundamental question concerning filters. He observed that: (1) the frequency responses of passive filters depend on L, R and C values, (2) in active continuous-time filters, the frequency response depends on RC products and (3) in switched-capacitor filters, the frequency response is determined by capacitor ratios and a clock frequency. He asked himself, "Is it possible to create a filter whose response is only dependent on a clock?" The answer turned out to be yes! The diagram in Figure 5(a) shows a classical IIR prototype operating in continuous time. Continuous-time waveforms are delayed, scaled by coefficients and then added to realize the output. Yannis' invention was to create the filter coefficients by chopping the delayed waveforms [16]; the duty cycle of a given chopping waveform implements a coefficient from 0 to 1 as shown in Figure 5(b) (Negative coefficients are easily realized with differential circuits.). Summation of the feedforward chopped paths creates the zeros of the filter and the summation of the feedback chopped paths creates the filter poles. Since the duty cycles of the waveforms can be controlled digitally, the entire filter function can be easily programmable from low pass to bandpass, etc. [17]. For this research work [16], Yannis received the W.R. Baker Award in 1981. A significant challenge to take the elegant theory of Figure 5 into practice was implementing the waveform delay on an IC. Tsividis and his student, D. Vallancourt, researched how best to implement such a delay on chip for that application. Many options were considered, including RC low pass filters with corner frequencies much higher than the bandwidth of interest. Instead of continuous-time delay, they opted for a discrete-time voltage-sample delay. With this small modification to the original theory, Yannis and Vallancourt demonstrated a highly programmable audio filter dependent only on timing [17].

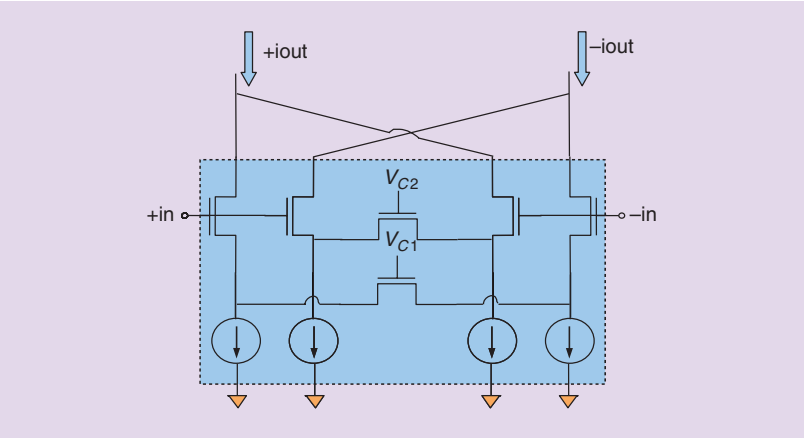

FIGURE 4: Linearized Transconductor.

While Yannis and Dave Vallancourt were intensely searching for a good method to delay audio-frequency continuous-time signals (remember this is the 1980's), they asked themselves: "Can we delay currents?" That question resulted in their invention of the current-copier circuit [18], shown in its simplest form in Figure 6. In phase 1, the current is converted to a gate-to-source voltage that is stored on the gate capacitance of the transistor. In phase 2, the copied current

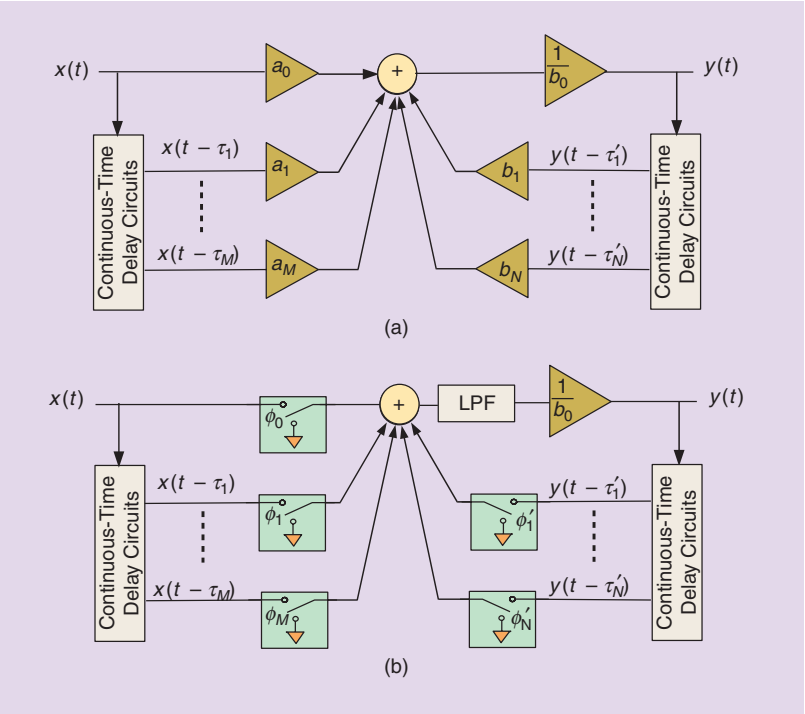

FIGURE 5: Filters Dependent only on timing: (a) conventional implementation of signal scaling and summation and (b) implementation of signal scaling by "chopping" waveforms with varying duty cycles to realize the coefficients.

THETA2021101
IPR2023-00819
Theta EX2002

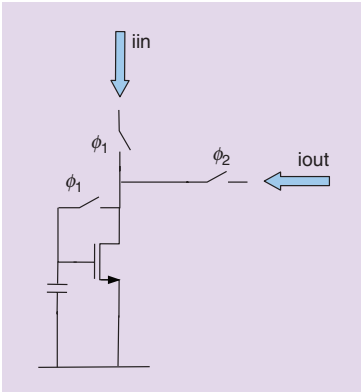

FIGURE 6: Current-copier circuit.

is held at the drain of the transistor. The current-copier invention led to the invention and growth of switched-current filters.

There is no room in this article to describe all Yannis' contributions to MOS filters, but a couple of more recent techniques deserve mentioning. In the 1990's, he studied bipolar log-domain filters and created more general alternatives for MOS technology. This led to his extensive work in companding filters [19] and low-power filters with signal-dependent dynamic biasing. Most recently, Yannis and his research group have been developing continuous-time DSPs [20]. These unusual signal processors hold the potential to achieve very low power dissipation because the dynamic power is correlated to the signal activity. They also provide a high degree of transfer function programmability. We are anxiously waiting to see their latest results.

What is the source of Yannis' creativity? First, he asks fundamental questions about conventional approaches and challenges one to think of alternatives that question basic assumptions. Second, he asks how a commonly assumed negative effect such as a parasitic capacitance or a nonlinearity, "can be used to advantage". Third, Yannis always understands a problem both intuitively and also from basic principles. Finally, he has not shied away from research that initially appears purely academic, but in the end has yielded practical engineering solutions that are employed in the industry.

We feel very fortunate and grateful to have been his students and for his continuing friendship.

References

[1] Y. Tsividis and P. R. Gray, "An integrated NMOS operational amplifier with internal compensation," *IEEE J. Solid-State Circuits*, vol. 11, no. 6, pp. 748–753, 1976.

[2] Y. Tsividis, D. Fraser, Jr., and J. Dziak, "A process-insensitive high-performance NMOS operational amplifier," *IEEE J. Solid-State Circuits*, vol. 15, no. 6, pp. 921–928, 1980.

[3] Y. Tsividis and D. Fraser, Jr., "Harmonic distortion in single-channel MOS integrated circuits," *IEEE J. Solid-State Circuits*, vol. 16, no. 6, pp. 694–702, 1981.

[4] Y. Tsividis, "Problems with precision modeling of analog MOS LSI," in *Proc. 1982 Electron Devices Meeting*, vol. 28, pp. 274–277.

[5] Y. Tsividis, *Operation and Modeling of the MOS Transistor*, 2nd ed. New York: McGraw-Hill, 1998.

[6] M. Banu and Y. Tsividis, "Floating voltage-controlled resistors in CMOS technology," *Electron. Lett.*, vol. 18, no. 15, pp. 678–679, 1982.

[7] M. Banu and Y. Tsividis, "Fully integrated active RC filters in MOS technology," *IEEE J. Solid-State Circuits*, vol. SC-18, pp. 644–651, Dec. 1983.

[8] Y. Tsividis, M. Banu, and J. Khoury, "Continuous-time MOSFET-C filters in VLSI," *IEEE J. Solid State Circuits*, vol. SC-21, no. 1, pp. 15–30, Feb. 1986 [*IEEE Trans. Circuits Syst.*, vol. CAS-33, no. 2, pp. 125–140, Feb. 1986].

[9] M. Banu, J. Khoury, and Y. Tsividis, "Fully differential operational amplifiers with accurate output balancing," *IEEE J. Solid-State Circuits*, vol. SC-23, no. 6, pp. 1410–1414, Dec. 1988.

[10] J. Sonntag, O. Agazzi, P. Aziz, H. Burger, V. Comino, M. Heimann, T. Karanink, J. Khoury, S. Madine, K. Nagaraj, G. Offord, R. Peruzzi, J. Plany, N. Rao, N. Sayiner, P. Setty, and K. Threadgill, "A high speed low power PRML read channel," *IEEE Trans. Magn.*, vol. 31, no. 2, pp. 1186–1195, Mar. 1995.

[11] Y. Tsividis, Z. Czarnul, and S. C. Fang, "MOS transconductors and integrators with high linearity," *Electron. Lett.*, vol. 25, no. 6, pp. 1368–1378, 1990.

[12] V. Gopinathan, Y. Tsividis, K.-S. Tan, and R. K. Hester, "Design considerations for high-frequency continuous-time filters and implementation of an anti-aliasing filter for digital video," *IEEE J. Solid-State Circuits*, vol. 25, no. 6, pp. 1368–1378, 1990.

[13] J. Khoury, "Design of a 15 MHz continuous-time filter with on-chip tuning," *IEEE J. Solid-State Circuits*, vol. 26, no. 12, pp. 1988–1997, Dec. 1991.

[14] S. Pipilos, Y. Tsividis, J. Fenk, and Y. Papananos, "A Si 1.8 GHz RLC filter with tunable center frequency and quality factor," *IEEE J. Solid-State Circuits*, vol. 31, no. 10, pp. 1517–1525, 1996.

[15] D. Li and Y. Tsividis, "Design techniques for automatically tuned integrated gigahertz-range active LC filters," *IEEE J. Solid-State Circuits*, vol. 37, no. 8, pp. 967–977, 2002.

[16] Y. Tsividis, "Signal processors with transfer function coefficients determined by timing," *IEEE Trans. Circuits Syst.*, vol. 29, no. 12, pp. 807–817, 1982.

[17] D. Vallancourt and Y. Tsividis, "A fully programmable sampled-data analog CMOS filter with transfer-function coefficients determined by timing," *IEEE J. Solid-State Circuits*, vol. 22, no. 6, pp. 1022–1030, 1987.

[18] S. Daubert, D. Vallancourt, and Y. Tsividis, "Current copier cells," *Electron. Lett.*, vol. 24, no. 25, pp. 1560–1561, Dec. 1988.

[19] Y. Tsividis, "Externally linear, time-invariant systems and their application to companding signal processors," *IEEE Trans. Circuits Systems II: Analog Digital Signal Processing*, vol. 44, no. 2, pp. 65–85, 1997.

[20] Y. Tsividis, "Continuous-time digital signal processing," *Electron. Lett.*, vol. 39, no. 21, pp. 1551–1552, 2003.

About the Authors

John M. Khoury (john.khoury@silabs.com) (M'85, SM'94) received the B.S. and Eng.Sc.D. from Columbia University in 1979 and 1988, respectively, and the S.M. degree from Massachusetts Institute of Technology in 1980. All three degrees are in electrical engineering with a focus on mixed-signal research and development. He has held various technical and management positions at Bell Laboratories, Multilink Technology Corporation and Silicon Labs. From 1995 to 1998, he was an Associate Professor of Electrical Engineering at Columbia University. He has been at Silicon Labs, Austin, Texas since 2005 and performs mixed-signal circuit design and signal processing development for Wireless Mesh Networks, Class D amplifiers, FM tuners, TV tuners and related areas. Dr. Khoury is a member of the 2014 ISSCC Technical Program committee, contributing to the Data Converter subcommittee. He is a co-recipient of the 1987 IEEE Darlington Award.

Dr. Banu received a PhD degree from Columbia University in 1984. He was with Bell Laboratories until 2001 (summer intern, MTS, Dpt. Head and R&D Director), with Agere Systems until 2004 (R&D Director) and did consulting and independent IP development until 2013 (MHI Consulting LLC). He founded Blue Danube Labs Inc. (BDL) to apply his IP to a revolutionary smart antenna technology. Currently he is VP R&D and CTO at BDL, which received Series-A funding from Sequoia Capital in 2013. Dr. Banu is an IEEE Fellow, received several IEEE and Lucent awards and is author of many publications and patents.

THETA2021102

IPR2023-00819
Theta EX2002

How a Humble Circuit Designer Revolutionized MOS Transistor Modeling

Colin C. McAndrew

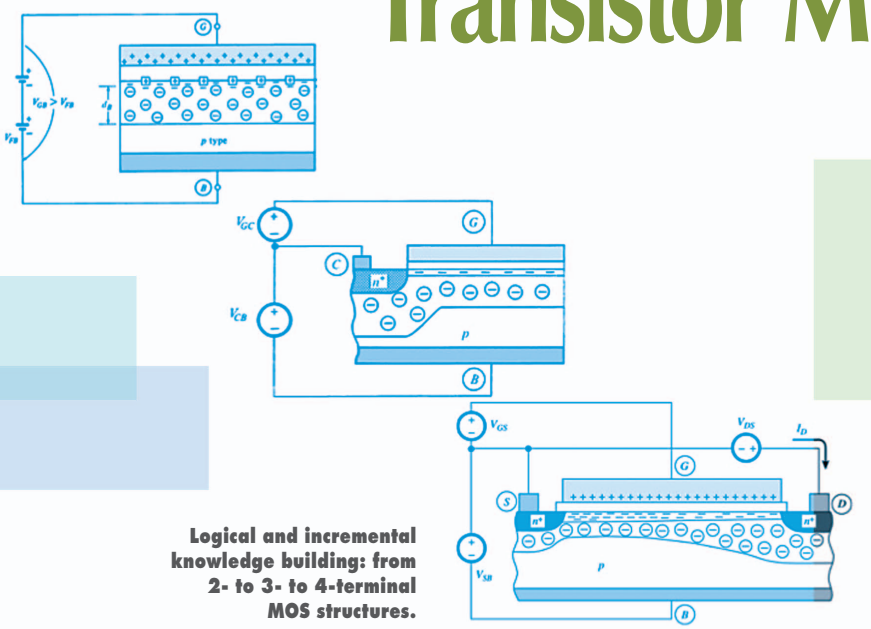

Logical and incremental knowledge building: from 2- to 3- to 4-terminal MOS structures.

I Introduction

CMOS circuit design is based on two fundamental pillars: Understanding how MOS transistors operate, so a designer can innovate new circuit topologies and functions or know how to adjust the geometry and bias of transistors in existing circuits to meet performance goals; and understanding how accurate the MOS transistor models used in circuit simulators are, to know where the results of the detailed simulations used to verify circuit performance can or cannot be trusted.

Open most textbooks on CMOS circuit design and the first chapter or two will concentrate on MOS transistor fabrication, operation, and modeling. The models reviewed there will form the basis of the circuit analyses presented throughout the rest of the book.

Open most textbooks on MOS transistor modeling, and the introductory material may include some information on fabrication, but will emphasize the fundamental physics related to electrostatics, semiconductors, and carrier transport. What those books do not include is information on circuits. This asymmetry is startling, since for the most part the days of discrete semiconductors are long gone, and the most widespread use of transistor models is in *integrated* circuit design, so circuit-relevance should be of prime importance. Alas, in general it is not[1]: physics and mathematical sophistication tend to relegate circuit needs to a secondary role.

Although Prof. Yannis Tsividis is renowned as one of the world's most innovative and accomplished CMOS circuit designers, perhaps his most important contribution to the semiconductor industry, and the one I came to know him through, has been his work on MOS transistor modeling.

Digital Object Identifier 10.1109/MSSC.2014.2347793
Date of publication: 12 November 2014

1) The EKV model is the obvious exception to this rule; it was developed by experienced analog CMOS designers to meet specific design needs.

1943-0582/14©2014IEEE

THETA2021103
IPR2023-00819
Theta EX2002

The key differentiating feature of his work in this area is that it preserves the rigor of the underlying device physics while at the same time focusing on relevance for circuit design. Here I will highlight the extent of his influence in this area, with emphasis on his book *Operation and Modeling of the MOS Transistor* [1], 2], see Figs. 1 and 2, which for brevity I shall refer to as *OMMT*.

II Style

In two aspects of style *OMMT* is head and shoulders above other text books on MOS transistors: clarity of presentation, and clarity of concepts.

One of the reasons I became a disciple of *OMMT* was that it is *so* easy to read: All concepts are explained clearly and succinctly, and re-emphasized a few times at different places to make sure they sink in. The way material is presented overall, from 2- to 3- to 4-terminal MOS structures and from 5- to 9-capacitance element small-signal models, is designed to lead students along a logical path to full understanding of MOS transistors while avoiding scaring them off by presenting the full complexity as a *fait accompli* in step 1. Moreover, it is not just the organization and structure that are easy to follow, the English prose is clear and flows beautifully, so learning and absorbing the material is almost effortless. It is not sufficient for an author to be an expert in the subject material being presented, he or she must be able to communicate effectively, and I always found it extremely easy to read *OMMT*.

In almost all expositions on MOS transistors you will find terms such as "threshold voltage" and "subthreshold" used as if they are definitive. Indeed, I used to use such language myself. Fig. 3 shows MOS transistor $I_D(V_{GS})$ characteristics at $V_{DS} = 1\text{V}$, on linear and log-linear scales. You can see that there is a region (to the left, marked as weak inversion) where I_D varies approximately exponentially with V_{GS} and a region (to the right, marked as strong inversion) where I_D varies roughly linearly with V_{GS}. Can you pick out a single, exact point (the threshold voltage V_T) that defines the boundary between near exponential and near linear behavior?[2] Most descriptions of MOS transistor behavior explicitly assume that such a point exists, and the vast majority of MOS transistor models are constructed based on the concept of this fictitious point. That unfortunately all-too-common "mental model" is an impediment to proper understanding of how MOS transistors behave.

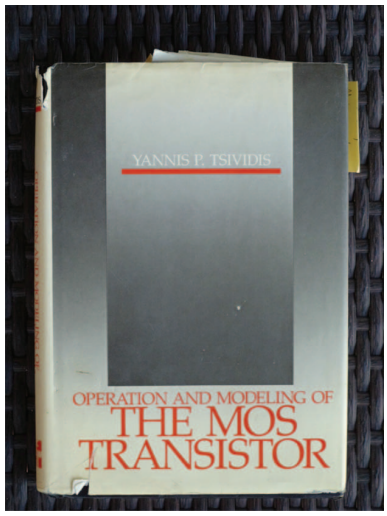

FIGURE 1: My copy of the first edition, with original stickies that marked the sections I referred to most often showing.

One of the most important aspects of *OMMT* is that is does not, with little explanation or justification, assume that V_T exists, and continue from there. It clearly explains the "muddiness" that surrounds V_T, and then rather than considering MOS transistor operation as being split into below and above V_T operation delineates weak, moderate, and strong inversion regions, and defines what these mean. More important, it is completely above-board in describing the imprecisions in the boundaries between these regions, especially between moderate and strong inversion, and presenting practical ways to determine them from experimental data.

2) If you can, patent how you do so, or at least write a paper on it!

One of the reasons I liked the book so much when I bought my first copy was the honesty in discussion of imprecise quantities.

III Influence on Students

The potential "customer base" for *OMMT* is much greater on the circuit design side than on the modeling engineer side, for the simple reason that only one suite of simulation models (provided by a few modeling engineers) is required per technology but they are reused for the development (by many design engineers) of all of the circuit blocks implemented for that technology. Therefore the main focus of *OMMT* is to educate circuit designers, not modeling engineers. In this role *OMMT* has become the most widely used text to train university students about MOS transistors.

In large part I believe this is because, as noted above, of the clear and simple prose style, which makes it easy to understand, and the logical structure and flow of the material, which makes it easy to follow and enables students to step-by-step assimilate the details of how MOS transistors operate.

But it is also because the material is presented by an expert circuit designer, rather than a device engineer, who understands what aspects are best emphasized to convey what is most important for circuit design.

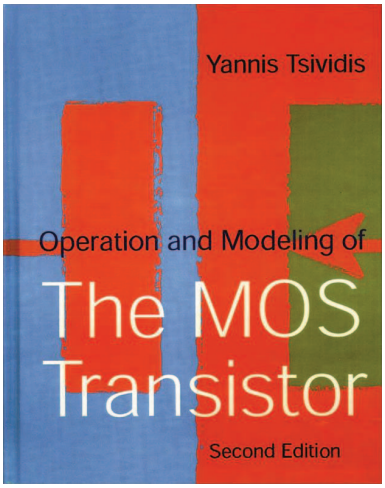

FIGURE 2: The second edition.

THETA2021104
IPR2023-00819
Theta EX2002

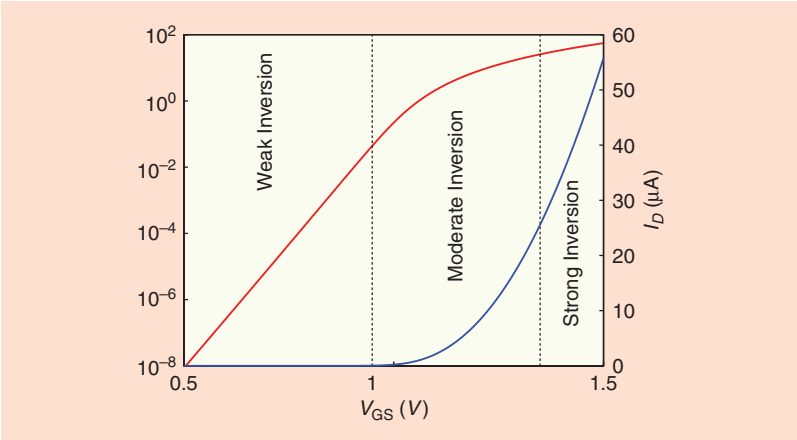

FIGURE 3: Can you determine the exact value of V_T? Red curve is log-linear scale, blue curve is linear scale.

Excruciating levels of detail, of potential interest to a modeling professional, but that may be obfuscating to students and are not critical to understand for circuit design, are avoided. As an example, when a small-signal model is envisioned by a modeling engineer it is invariably as a *y*-parameter model. This is because most models are formulated as large-signal models of currents and charges as functions of voltages, in part because that is often the simplest way to develop a model but also in part because it aligns with how circuit simulators work. When these are linearized to give a small-signal model the *y*-parameter form follows naturally.

However, that form may not be intuitive to a designer when trying to visualize how a particular transistor biasing scheme or a specific circuit topology operates. Although the *y*-parameter small-signal model is covered in *OMMT*, a much more intuitive form, with a clear circuit representation, is emphasized. Again, this is to benefit the design, rather than modeling, engineer, as many more of the former use the book than the latter.

The significant number of problems, and requirement to write a computer program to implement the models presented in the book, also reinforce the material to students.[3]

In this section I have emphasized students working on circuit topics. However, it has been my pleasure over the years to work with quite a few students whose research area is in modeling, and they invariably have a copy of *OMMT*, have studied it carefully, and cite it in their theses and papers.

IV Influence on Industry Professionals

This is my bailiwick, and trust me when I tell you that *OMMT* is the bible as far as modeling engineers in industry are concerned. Very many of us garnered significant portions of our knowledge about MOS transistors and models from successive editions of the book, and I believe that it is the book that is most widely owned and most widely referenced by professional modeling engineers.

On occasion I know I yearned for greater detail on some aspects of modeling, such as maintaining proper behavior for operation in accumulation and depletion, which are critical for an industrial-strength model but irrelevant for the vast majority of CMOS circuits. But if the details necessary to encompass that detract from understanding by circuit designers, it is understandable that this material should not be included.

As noted above, for small-signal purposes modeling engineers tend to think in terms of *y*-parameters, and not in terms of design-oriented representations. It is nice that the 9-element small-signal capacitance model form presented in the first edition of *OMMT* has been adopted, although unfortunately not universally, by modeling engineers.

In my daily work I have the pleasure of interacting and collaborating with many outstanding circuit designers. Most of them also have a copy of *OMMT*, which makes it easy to respond to questions I get on the phone: I just ask them to open to a certain page and look at a specific figure or equation, and then can provide them with the information they need effectively and quickly.

V Pioneering Benchmarks

No model is perfect, and over the years MOS transistor models have continued to evolve and improve. But models cannot be fixed if the developers do not understand exactly what the problems with a particular model are. The way to raise the bar for model capabilities is to develop benchmark tests that definitively evaluate whether a model is or is not afflicted by a certain problem.

The first paper that I am aware of that introduced benchmarks for MOS transistor models was published by Prof. Tsividis more than 30 years ago [3], and this was followed with a substantially expanded set of benchmarks about a decade later [4]. Part of the "call-to-arms" when [4] was presented was for designers in the audience to go back to their companies and give a copy of the paper to their modeling engineers, and ask them if the models they were providing passed the benchmarks. I became aware of that paper when one of my design colleagues, who had attended the presentation, came to me and did precisely that![4]

The development of benchmarks to evaluate MOS transistors models has been of immense benefit to the

3) But don't tackle problems 9.15 or 9.16 (8.15 and 8.16 in the third edition) unless you have a *lot* of time on your hands!

4) I forget the exact details, but my model did a pretty good job in passing the tests, although it was not completely free of issues.

THETA2021105
IPR2023-00819
Theta EX2002

industry as a whole, and Prof. Tsividis pioneered this area.[5]

VI Foundation for Circuit Innovation

Deep understanding of how MOS transistors operate has also led to the development of innovative circuit applications.

In [5], [6] understanding of how nonlinearities arise in MOS transistors lead to an unconventional biasing scheme that cancels the nonlinearities, resulting in a resistor with a distortion level of -90 dB for a 1 V peak-to-peak signal.

Another clever application was reported in [7]. By understanding how the internal state, both potentials and charges, of a MOS device varies as external biases are changed it was realized that single transistor dynamic boosting of the gate voltage was possible, and that this phenomena can be used for very low power and very low noise small-signal amplification. The actual structure used is a three-terminal device, with gate, source, and body connections, and the drain shorted to the source. This is precisely the structure analyzed in Chapter 3 of *OMMT*; it was primarily intended as a steppingstone to understanding of the operation of a conventional four-terminal transistor, but turned out to have serendipitous application in and of itself.

VII Final Comments

MOS transistors are the basic building block of the modern electronics industry. Today it is not possible to rant "SPICE lies," hurl your computer off the top of a building, then resort to pencil-and-paper calculations to design a CMOS chip: anyone wanting to become effective at CMOS circuit design needs to understand how MOS transistors work, and what are the limitations and inaccuracies of the MOS transistor models used in circuit simulators.

Prof. Tsividis' understanding and research, as embodied in the book *OMMT*, has not only provided a clear and logical path to teaching future circuit design engineers about MOS transistors, it has been, for almost three decades, the standard reference for industry professionals such as myself working in the area of MOS transistor modeling. That is why whenever I gave tutorials or educational sessions on compact modeling I would always hold up a copy of *OMMT* and say "if you buy one book on modeling, get this." And that is why I stopped using terms like "subthreshold" or "above threshold" and now assiduously use the terms weak, moderate, and strong inversion. Unfortunately I must admit, for brevity, that I still use the term "MOSFET" rather than "MOS transistor," so I guess I still need to be more disciplined and follow Prof. Tsividis' rigor.

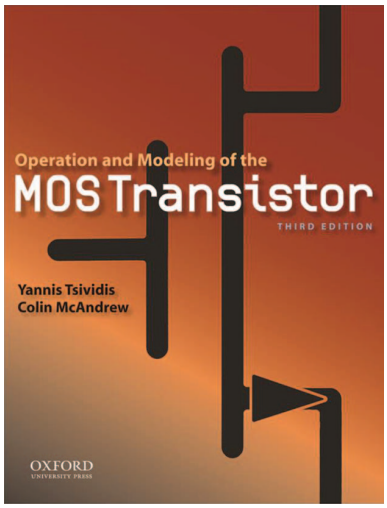

FIGURE 4: The third edition.

After learning from, and encouraging others to learn from, Prof. Tsividis' book for many years, you can imagine how honored I felt when he asked me to co-author the third edition of *OMMT* [8] with him, see Fig. 4. There is a companion web site [9] for this edition that enabled details obfuscating to circuit designers, but important to modeling engineers, to be made available.

There is only one problem I ever had with *OMMT*: when a new edition came out, I had to train my new copy to open to the "right" pages—from such frequent use my old copies automatically fell open at the sections I referred to the most![6]

References

[1] Y. Tsividis, *Operation and Modeling of the MOS Transistor.* New York: McGraw-Hill, 1987.

[2] Y. Tsividis, *Operation and Modeling of the MOS Transistor*, 2nd ed. New York: McGraw-Hill, 1999.

[3] Y. Tsividis, "Problems with precision modeling of analog MOS LSI," in *IEDM Tech. Dig.*, 1982, pp. 274–277.

[4] Y. Tsividis and K. Suyama, "MOSFET modeling for analog circuit CAD problems and prospects," in *Proc. CICC*, 1993, pp. 14.1.1–14.1.6.

[5] Y. Tsividis and K. Vavelidis, "Linear, electronically tunable resistor," *Electron. Lett.*, vol. 28, no. 25, pp. 2303–2305, Dec. 1992.

[6] K. Vavelidis, Y. P. Tsividis, F. Op't Eynde, and Y. Papananos, "Six-terminal MOSFET's: Modeling and applications in highly linear, electronically tunable resistors," *IEEE. J. Solid-State Circuits*, vol. 32, no. 1, pp. 4–11, Jan. 1997.

[7] S. Ranganathan and Y. Tsividis, "Discrete-time parametric amplifier based on a three-terminal MOS varactor: Analysis and experimental results," *IEEE. J. Solid-State Circuits*, vol. 38, no. 12, pp. 2087–2093, Dec. 2003.

[8] Y. Tsividis and C. McAndrew, *Operation and Modeling of the MOS Transistor*, 3rd ed. New York: Oxford Univ. Press, 2011.

[9] [Online]. Available: http://global.oup.com/us/companion.websites/9780195170153/

About the Author

Colin McAndrew (mcandrew@ieee.org) (S'82-M'84-SM'90-F'04) received the Ph.D. and M.A.Sc. degrees in Systems Design Engineering from the University of Waterloo, Canada, in 1984 and 1982, respectively, and the B.E. (Hons) degree in Electrical Engineering from Monash University, Melbourne, Australia, in 1978. From 1987 to 1995 he was at AT&T Bell Laboratories, Allentown, PA. Since 1995 he has been with Freescale Semiconductor (formerly Motorola Semiconductor Products Sector), Tempe, AZ where he is at present a Freescale Fellow. He was an Editor of the IEEE Transactions on Electron Devices from 2001 to 2010, has been an editor of the IEEE Journal of the Electron Devices Society since 2012, and is or has been on the technical program committees for the IEEE BCTM, ICMTS, CICC, and BMAS conferences.

SSC

5) It is still somewhat disheartening to realize that it took over three decades for some of the problems to be fixed. Also, on multiple occasions I have seen model developers proudly present results of a benchmark test without understanding that their model failed the benchmark!

6) Although I must admit, it was nice for each new version not to have the unsightly black smudges and dirt on the page edges from years of constant use.

THETA2021106
IPR2023-00819
Theta EX2002

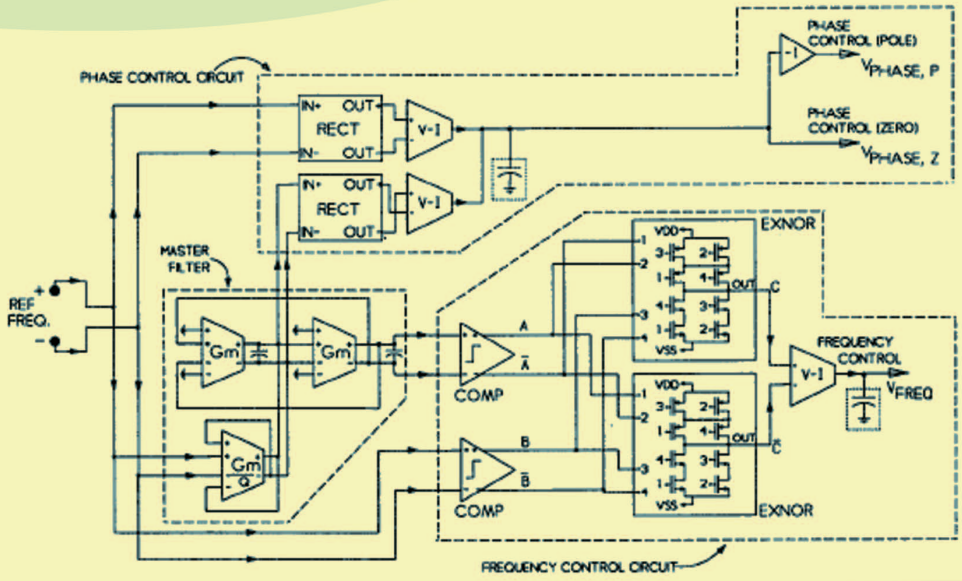

THE OPENER GRAPHIC IS FROM [10].

Yannis Tsividis, Path-Breaking Researcher and Educator

Gabor Temes

I took first notice of Prof. Tsividis's work around 1977, when my UCLA students and I started to work on *switched-capacitor* (*SC*) circuits. These circuits may perform the same functions (filtering, equalization, amplification) as the traditional active-RC ones, but are more suitable for integrated MOS implementation, since their frequency responses depend only on the ratios of capacitances, which can be accurately controlled in fabricated devices. A key component of SC circuits is the operational amplifier (opamp). The design of CMOS opamps was a new challenge, and the UC Berkeley researchers (with Yannis in the forefront) were the

Digital Object Identifier 10.1109/MSSC.2014.2347796
Date of publication: 12 November 2014

 1943-0582/14©2014IEEE

THETA2021107
IPR2023-00819
Theta EX2002

leaders in meeting it. I learnt a great deal from Yannis's December 1976 JSSC papers [1] [2], and even called him on the telephone a few times to get help with our SC projects. He was most helpful, and we succeded in our design.

By 1980, there were simplified analysis techniques, giving valid approximation only for sampling frequencies far higher than the Nyquist rate of the signal. In [3], Yannis presented an exact analysis of a SC circuit, and showed that subtleties exist; for example, that if you take a passive highpass RC filter and replace the R by a switched capacitor of supposedly equivalent resistance, you can get a voltage gain larger than 1 (supported by experimental results). Also, the existing design techniques for simple SC filters assumed that ideal components could be used. However, the analysis of complex SC circuits, including also the unavoidable nonideal effects, such as parasitic capacitance, charge injection, finite opamp gain and nonzero switch resistance, was an open problem In the 1980s. Fortunately for the designers of SC circuits, Yannis and his students S.C. Fang and K. Suyama, along with Prof. Omar Wing, developed the theory of analyzing such generalized circuits. The result was SWITCAP, a utility SC analysis program [4] [5]. For many years afterwards, SWITCAP, and its expanded version SWITCAP2 [6], remained the designer's top choice for helping to design SC filters and other SC circuits. I used it happily, and taught its use to my many students active in SC circuit design. Fig. 1 (from [6]) illustrates the wide variety of circuit elements which SWITCAP2 was capable of simulating.

Towards the end of the 1980s, Yannis started a crusade, advocating the use of continuous-time (CT) signal processing in CMOS ICs [7] [8] [9] in high-frequency applications. This was swimming against the tide, since the accepted wisdom preferred the more accurate and robust SC circuits (which he earlier helped to propagate) for *all* integrated analog filters. However, Yannis also recognized the key advantages of CT filters: the absence of such detrimental effects as signal and noise aliasing, charge injection, noise mixing, slow settling and slew rate limitations. The advantages of CT filters turned out to be crucial in important high-frequency applications, such as disk drive electronics and antialiasing filters for digital video [10]. Rather, the group developed MOSFET-C techniques [7][8] as well as worked on early Gm-C filters with the industry, as described in [10]. Fig. 2 (from [9]) shows an example of an implemented Gm-C filter, and Fig. 3 the method of programming the transconductors. Fig. 4 (from [10]) illustrates the method of tuning a Gm-C filter.

It was found some years later that the advantages of CT filters are also very important in the implementation of the loop filters needed in wideband ΔΣ analog-to-digital converters (ADCs). Unsurprisingly, some of Dr. Tsividis's former students, such as Dr. Shanthi Pavan, played a major role in the development of CT ΔΣ ADCs.

Dr. Tsividis has continued his research efforts in CT signal processing

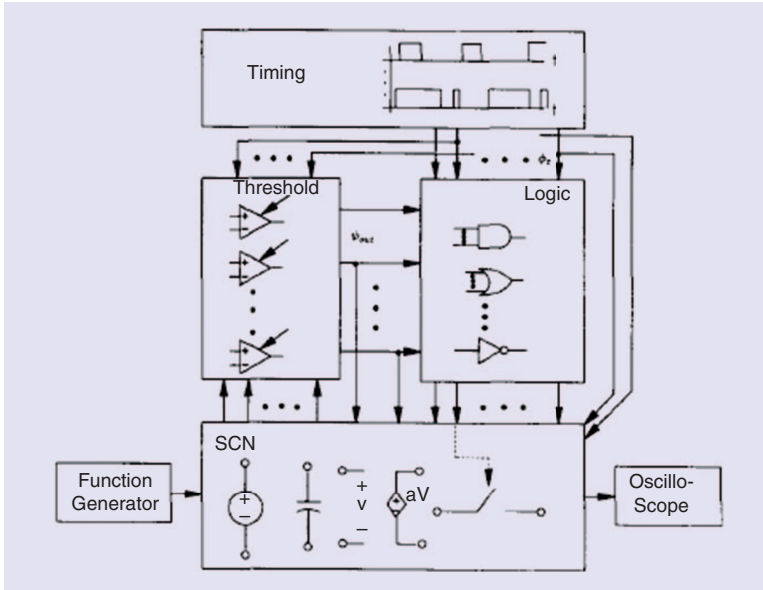

FIGURE 1: Structure of mixed SC/D network defined in SWITCAP2 (from [6]).

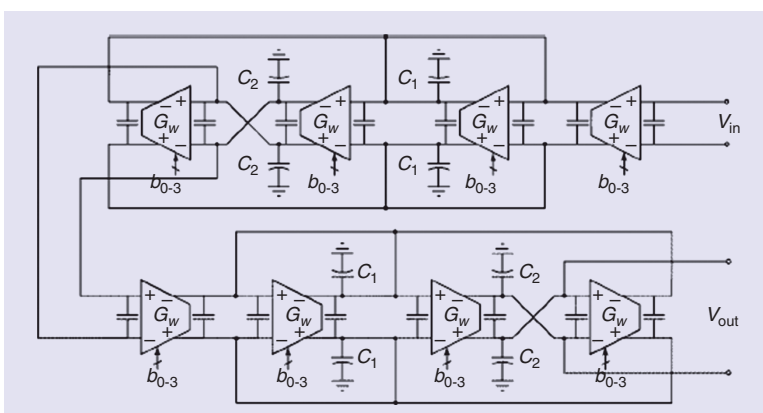

FIGURE 2: G_m-C filter (from [9]).

THETA2021108
IPR2023-00819
Theta EX2002

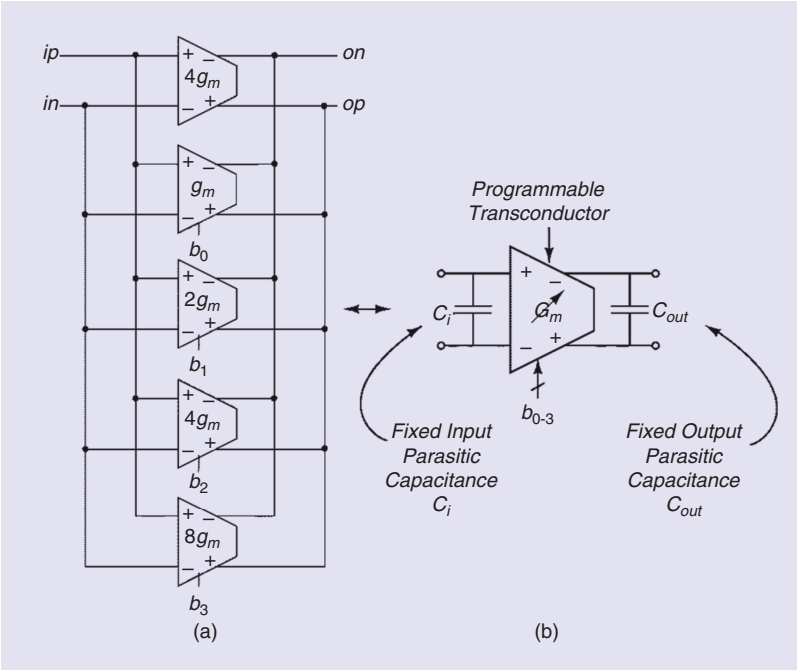

FIGURE 3: Programmable transconductance (from [9]).

up to the present time, extending CT methods even to digital signal processing [10] [11].

(An inadvertent demonstration of the problems with sampled-data systems was provided by Yannis's beard. I saw him with a low sample rate, about 3-4 sightings/year. When many years ago he grew a large and luxurious beard, it was a slow CT process, and I was able to track it even at the low sample rate. In fact, it made identification at large meetings much easier. However, at some point, without warning, he shaved the beard off. This discrete-time action caused serious aliasing: I didn't recognize Yannis when we met at the next meeting, and for a while I had trouble identifying him among the masses of clean-shaved engineers at ISSCC and ISCAS.)

Another field where Yannis's research made a large impact was *companding signal processing*. Companding (compressing-expanding) has been long used in communications to process signals in circuits with limited dynamic range. Its purpose is to keep the signal level well over that of noise, but below the overload limits of the processor. Dr. Tsividis and his collaborators developed circuits for such applications. [12] [13]. As with CT circuits, he started with analog companding methods, and later extended these to digital signal processing [14].

In several of these research projects, Yannis was opening new vistas for research, departing from the prevailing

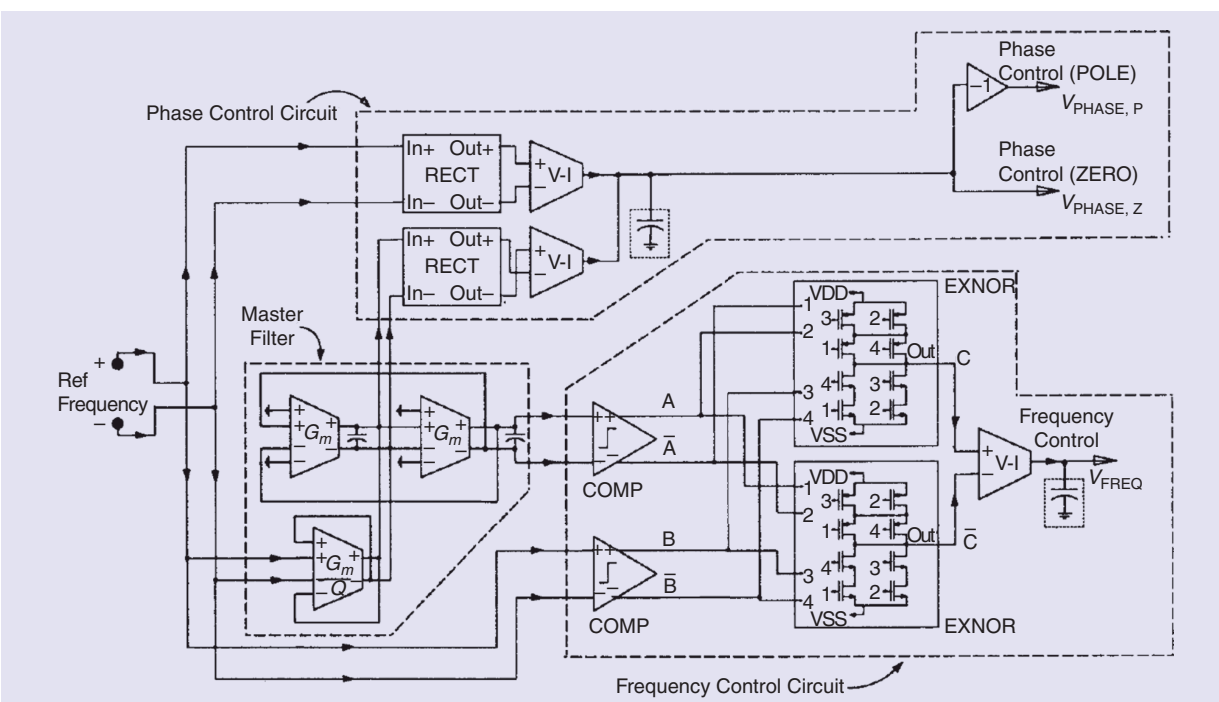

FIGURE 4: Block diagram of a tuning circuit for a G_m-C filter (from [10]).

THETA2021109
IPR2023-00819
Theta EX2002

state of the art. His innovations were sometimes revolutionary. Often he prevailed, and created new design paradigms replacing the existing ones.

Yannis's research and teaching activities have extended over a very broad area, ranging from circuit theory to CMOS device technology. I did not follow his work in all these fields, but I have often consulted his encyclopedic book on the MOS transistor [15], and also his books on MOS VLSI integrated circuits and on integrated CT filters [16] [17].

Concerning his other activities, Prof. Tsividis's mentoring of his graduate students was also exceptional. He produced several generations of leaders in the fields of analog and mixed-mode integrated circuits and signal processing. I interacted with many of his successful former students, and became aware of their respect and admiration for their advisor.

In conclusion, I regard Dr. Tsividis's contributions to the discipline of solid-state circuits as unique. In addition to furthering existing fields of investigation, he proposed and advocated completely new approaches to circuit design. He and his talented students were then able to translate these ideas into practical tools for analog and mixed-signal circuit designers. He advanced our knowledge and design capabilities in many important ways!

Concerning his other activities, Prof. Tsividis's mentoring of his graduate students was also exceptional.

References

[1] Y. P. Tsividis, P. R. Gray, D. A. Hodges, and J. Chacko, Jr., "A segmented u-255 law PCM voice encoder utilizing NMOS technology," *IEEE J. Solid-State Circuits*, vol. SC-11, no. 6, pp. 740–747, Dec. 1976.

[2] Y. P. Tsividis and P. R. Gray, "An integrated NMOS operational amplifier with internal compensation," *IEEE J. Solid-State Circuits*, vol. SC-11, no. 6, pp. 748–754, Dec. 1976.

[3] Y. P. Tsividis, "Analytical and experimental evaluation of a switched-capacitor filter and remarks on the resistor/switched-capacitor correspondence," *IEEE Trans. Circuits Syst.*, vol. CAS-26, no. 2, pp. 140-144, Feb. 1979.

[4] Y. P. Tsividis, "Analysis of switched capacitive networks," *IEEE Trans. Circuits Syst.*, vol. CAS-26, no. 11, pp. 935–947, Nov. 1979.

[5] S. C. Fang and Y. P. Tsividis, "Modified nodal analysis with improved numerical methods for switched-capacitor networks," in *Proc. Int. Symp. Circuits Syst.*, Houston, Texas, Apr. 1980, pp. 977–980.

[6] K. Suyama, S. C. Fang, and Y. Tsividis, "Simulation methods for mixed switched-capacitor/digital networks," *IEEE J. Solid-State Circuits*, vol. SC-25, no. 6, pp. 1403–1412, Dec. 1990.

[7] M. Banu and Y. Tsividis, "An elliptic continuous-time CMOS filter with on-chip automatic tuning," *IEEE J. Solid-State Circuits*, vol. SC-20, no. 6, pp. 1114–1121, Dec. 1985.

[8] Y. Tsividis, M. Banu, and J. F. Khoury, "Continuous-time MOSFET-C filters in VLSI," *IEEE Trans. Circuits Syst.*, vol. 33, no. 2, pp. 125–140, Feb. 1986 (special issue on VLSI analog and digital signal processing) also published jointly in the *IEEE J. Solid-State Circuits*, vol. SC-21, no. 1, pp. 15–30, Feb. 1986 (invited).

[9] S. Pavan, Y. P. Tsividis, and K. Nagaraj, "Widely programmable high-frequency continuous-time filters in digital CMOS technology," *IEEE J. Solid-State Circuits*, vol. 35, no. 4, pp. 503–511, Apr. 2000.

[10] V. Gopinathan, Y. P. Tsividis, K.-S. Tan, and R. K. Hester, "Design considerations for high-frequency continuous-time filters and implementation of an antialiasing filter for digital video," *IEEE J. Solid-State Circuits*, vol. 25, pp. 1368–1378, Dec. 1990.

[11] B. Schell and Y. Tsividis, "A continuous-time ADC/DSP/DAC system with no clock and activity-dependent power dissipation," *IEEE J. Solid-State Circuits*, vol. 43, no. 11, pp. 2472–2481, Nov. 2008.

[12] Y. Tsividis, V. Gopinathan, and L. Toth, "Companding in signal processing," *Electron. Lett.*, vol. 26, pp. 1331–1332, 1990.

[13] Y. Tsividis, "Externally linear, time-invariant systems and their application to companding signal processors," *IEEE Trans. Circuits Syst., Part II*, vol. 44, no. 2, pp. 65–85, Feb. 1997.

[14] A. Klein and Y. Tsividis, "Externally linear discrete-time systems with application to instantaneously companding digital signal processors," *IEEE Trans. Circuits Syst. I*, vol. 58, no. 11, pp. 2718–2728, Nov. 2011.

[15] Y. Tsividis, *Operation and Modeling of the MOS Transistor*. New York: McGraw-Hill, 1987.

[16] Y. Tsividis, *Mixed Analog-Digital VLSI Devices and Technology: An Introduction*. New York: McGraw-Hill, 1996.

[17] S. Pavan and Y. Tsividis, *High Frequency Continuous Time Filters in Digital CMOS Processes*. Boston: Kluwer, 2000.

About the Author

Gabor C. Temes (Gabor.Temes@oregonstate.edu) (SM'66–F'73–LF'98) received the undergraduate degrees from the Technical University of Budapest and Eötvös University, Budapest, Hungary, in 1952 and 1955, respectively. He received the Ph.D. degree in electrical engineering from the University of Ottawa, ON, Canada, in 1961, and an honorary doctorate from the Technical University of Budapest, Budapest, Hungary, in 1991.

He held academic positions at the Technical University of Budapest, Stanford University, Stanford, CA, and the University of California at Los Angeles (UCLA). He worked in industry at Northern Electric R&D Laboratories (now Bell-Northern Research), Ottawa, Canada, as well as at Ampex Corp. He is now a Professor in the School of Electrical Engineering and Computer Science at Oregon State University and Distinguished Professor Emeritus at UCLA. His recent research has dealt with CMOS analog integrated circuits, as well as data converters. He coedited and coauthored many books; the most recent one is *Understanding Delta-Sigma Data Converters* (IEEE Press/Wiley, 2005). He also wrote approximately 300 papers in engineering journals and conference proceedings.

Dr. Temes was Editor of the *IEEE Transactions on Circuit Theory* and Vice President of the IEEE Circuits and Systems (CAS) Society. In 1968 and in 1981, he was co-winner of the IEEE CAS Darlington Award, and in 1984 winner of the Centennial Medal of the IEEE. He received the Andrew Chi Prize Award of the IEEE Instrumentation and Measurement Society in 1985, the Education Award of the IEEE CAS Society in 1987, and the Technical Achievement Award of the IEEE CAS Society in 1989. He received the IEEE Graduate Teaching Award in 1998, and the IEEE Millennium Medal as well as the IEEE CAS Golden Jubilee Medal in 2000. He was the 2006 recipient of the IEEE Gustav Robert Kirchhoff Award, and the 2009 IEEE CAS Mac Valkenburg Award.

SSC

THETA2021110
IPR2023-00819
Theta EX2002

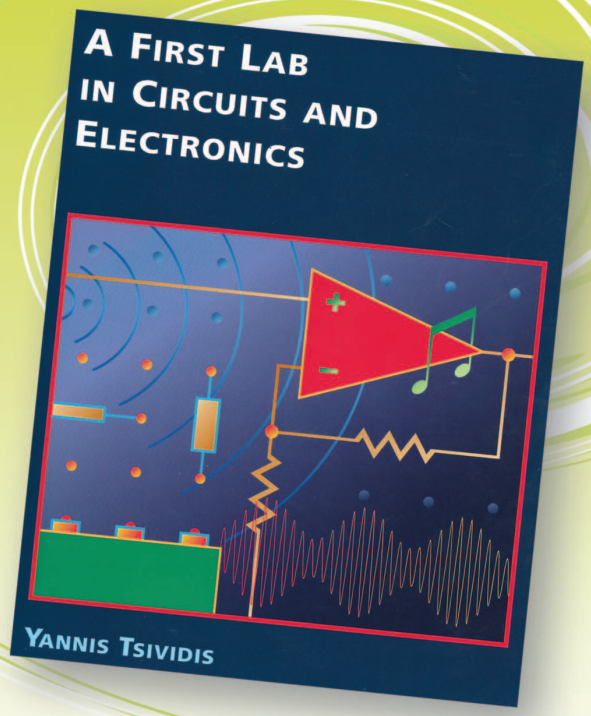

Yannis Tsividis, Educator

David Vallancourt

The great universities offer more than a collection of excellent courses and research achievements. A unique culture —a personality—characterizes the institutions that consistently bring out the best in their students and earn their loyalty after graduation. Like-minded faculty and administration can develop this personality in an emergent process, but a consistent, dedicated voice is most effective in shaping it and preserving its fundamental character while letting it evolve with the times and the students. Yannis Tsividis has been that voice in the Department of Electrical Engineering at Columbia University for almost 40 years. Today, the entire Engineering School is enjoying a burst of innovation, with Yannis leading its efforts in education.

Yannis' teaching career began in an era during which students were of generally similar backgrounds to their teachers. Most had prior experience with ham radios, kit stereos and so on, and were seeking to deepen their knowledge beyond what was easily grasped. Yannis' pedagogical style was consistent with these times. His Operation and Modeling

Digital Object Identifier 10.1109/MSSC.2014.2347798
Date of publication: 12 November 2014

 1943-0582/14©2014IEEE

THETA2021111
IPR2023-00819
Theta EX2002

Yannis Tsividis as a Role Model for Reversing the Negative Spiral of Basic Circuits and Systems Education

It is acknowledged worldwide over the past several decades that the basic education of circuits and systems (CAS) is not in stable water. A first reason is that smart phones, iPads, the Internet and computers have created expectations of instant gratification among young people. This has reduced the attention span of students, so that they are not prepared for the lengthy lectures that traditionally used to dominate the conceptual elements of CAS education. Another issue is the fact that, in EE departments, basic CAS courses are often assigned to uninterested or unmotivated teachers. Even research in CAS is not in the mainstream at many universities anymore. However, the role of CAS is still central in basic EE education, with numerous concepts that are essential for every EE undergraduate student: transfer functions, impulse response, time constant, Bode diagrams, impedance, …

Much earlier than most of us, Yannis Tsividis had deep insight in this new state of affairs [1]. His courageous and wise approach was to excite the interest of students by an early lab on circuits [2]. Such a lab can have a deep impact on the students by illustrating the many concepts of CAS, even before those are formally introduced in theoretical courses. The effect of this was to reverse the negative trend in EE and double enrollment in EE at Columbia University in three years. This success has stimulated several universities to adopt this role model. Also within the IEEE CAS Society, Yannis's contagious ideas have stimulated the start of a new Technical Committee, CASEO CAS education and outreach.

CAS Society has recognized the exceptional contributions of Yannis to the CAS education by awarding him the CAS Educational Award in 2010.

–Joos Vandewalle, ESAT-Stadius, KU Leuven, Belgium

Digital Object Identifier 10.1109/MSSC.2014.2347802
Date of publication: 12 November 2014

References

[1] Y. Tsividis, "Turning students on to circuits," *IEEE Circuits Syst. Mag.*, pp. 58–63, First Quarter 2009.
[2] Y. Tsividis, *A First Lab in Circuits and Electronics*. New York: Wiley, 2002.

About the Author

Joos Vandewalle obtained the electrical engineering degree and doctorate in applied sciences from KU Leuven, Belgium in 1971 and 1976.

He was a full professor at the Department Electrical Engineering (ESAT), Katholieke Universiteit Leuven, Belgium; head of the SCD division at ESAT, with more than 150 researchers. Since October 2013 he is a professor emeritus with assignments at KU Leuven. His present tasks include chairing the positioning test for engineering in Flanders, board member of the Flemish Academy in Brussels, and chairing PhD defenses.

He held visiting positions at the University of California, Berkeley and I3S CNRS Sophia Antipolis, France.

He taught courses in linear algebra, linear and nonlinear system and circuit theory, signal processing and neural networks. His research interests are in mathematical system theory and its applications in circuit theory, control, signal processing, cryptography and neural networks. He (co-)authored more than 300 international journal papers and obtained several best paper awards and research awards. He is a Fellow of IEEE, IET, and EURASIP and member of the Academia Europaea and of the Belgian Academy of Sciences. He is currently a member of the Board of Governors of the IEEE Circuits and Systems Society and Chair-Elect of the IEEE CAS Circuits and Systems Education and Outreach TC.

of the MOS Transistor [1] is a classic text, carefully written for an audience that appreciates precision of thought and expression. In this it mirrored his classroom presentations, also models of focus, clarity, and insight. As a Columbia undergraduate myself (BSEE 1981), I was counseled by many upperclassmen to take any course taught by Yannis, regardless of subject. Recently I saw that same advice offered on one of the Columbia student social networking sites. How does one remain effective enough to be singled out by students over such a long period?

In a 1998 paper [2], Yannis recognized the need for updating teaching methods in the field of circuits and electronics in light of the changing backgrounds of incoming students. Noting specifically that (a) students have not "tinkered", (b) they are impatient, and (c) they believe "software is everything", he designed and proposed a new first-year lab/lecture course to address these issues, and wrote a unique lab manual for its implementation [3].

The quality of the research and documentation in PhD dissertations and journal articles that emerged from his mentoring has earned several awards among his 28 matriculated PhD students.

One key aspect of the lab was the balance between guidance and freedom in the experimental procedures, gently nudging the students into tinkering. As Yannis writes, "There are steps to be followed in each experiment, but parts of the story are withheld, and the students are required to search for these parts themselves." [4] The motivation to do so is provided by an immediacy of application in realistic settings. For example, observing that listening to music is as near a universal student experience as can be imagined, Yannis wrote many of

THETA2021112
IPR2023-00819
Theta EX2002

FIGURE 1: Audio equipment supplements standard test instruments in Columbia's *Intro to Electrical Engineering* lab.

the experiments to include music signal sources as well as traditional function generators, and to supplement the oscilloscope with amplifiers and speakers [Figure 1]. In fact, certain experiments are affectionately known among the TA population as "headache labs", and are student favorites every semester.

vocal-like sounds they produce, and electronics students design and build battery-operated phasor pedals (Jimi Hendrix, anyone?) from scratch. Yannis' groundbreaking lab manual has been adopted by many universities.

This tinkering ethos and self-motivated, realistic, and immediate application have since become hallmarks of the burgeoning Maker movement. Columbia's new Maker Lab, created under the leadership of Dean Mary Boyce and headed by EE Department Professor John Kymissis, is the most recent embodiment of the process Yannis pioneered over fifteen years ago.

> ***I am now his colleague, and from the broad picture of a school's curriculum to the mentorship of individual students, Yannis has shown me how to be an educator.***

In addition to popularity among Columbia students (a decade-long decline in overall enrollment in the EE major was reversed following the introduction of his course), Yannis' approach has proven effective as a teaching tool: measured student performance in courses for which his lab was a prerequisite rose significantly. Courses across the EE Department have adopted the hands-on style with similar results. Today students in the junior-level circuits course modify wah-wah pedals to alter the characteristic

Another aspect of Maker is its cross-disciplinary nature. As Advisor to the Dean on Undergraduate Curriculum for the last few years, Yannis surveyed students to identify current issues and found that program flexibility was key, with students preferring more time to choose a major and opportunity to create cross-disciplinary programs. He led the Committee which created the new required first-year course *Art of Engineering*, which exposes students to all engineering disciplines taught at Columbia through weekly seminars given by academic and industry engineers, and hands-on projects. Now, as Chair of Columbia Engineering's Advisory Committee on Undergraduate Curriculum, Yannis is leading the effort to promote cross-disciplinary opportunities for undergraduates by (a) unifying the core course requirements across departments in order to give more time up front to choose a major, and (b) reducing the number of required discipline-specific courses in each department, making room for courses in other fields.

Yannis' school-wide effort follows years of similar engagement with all aspects of the Electrical Engineering Department's education mission, from redesign of the PhD qualifying exam (1999) and EE undergraduate core curriculum (2003) to creation of a streamlined combined BS/MS program (2007), the last of which allows students the flexibility to

THETA2021113
IPR2023-00819
Theta EX2002

reorder the courses for the two degrees, interleaving them for optimal flow and maximum efficiency. The combined degree program has been adopted by other Departments at Columbia as well.

Any course taught by someone with such a long-standing enthusiasm for education could be expected to be well attended, and indeed Yannis' dozens of courses have been so over the years. His organization and attention to detail, including careful selection of TAs, has kept the students' experience of even the larger courses positive, but Yannis recognized early on that PhD research would not scale in the same way. He has limited the number of students he supervised at any one time, giving each the benefits of easy access and close attention.

As one of his PhD students in the 1980's, I can attest that his attention was sometimes daunting—my fellow students and I would try to make certain we knew what we were talking about before knocking on his door, as he had the ability and willingness to stop what he had been doing, listen to us, and find the flaw in any technical argument almost immediately. We considered ourselves successful if we could last a few minutes under his scrutiny. I still have copies of rough drafts of my research papers which contain more text in the form of his red-inked comments than in my manuscript. The quality of the research and documentation in PhD dissertations and journal articles that emerged from his mentoring has earned several awards among his 28 matriculated PhD students.

Yannis was demanding, but his nurturing and playful personality always came through, creating a cohesiveness to his research group. He continues to keep in touch with nearly all of us. We who were his PhD students value both his mentorship and friendship.

At the opposite extreme of one-on-one PhD supervision is the Massive Online Open Course, or "MOOC". Here also Yannis is in the forefront of the effort at Columbia, teaching the first electrical engineering course offered by the Engineering School on the Coursera network [5]. Enrollment exceeded seventeen thousand students. His critique of this enterprise is helping to guide Columbia in further developing its presence online. Of course MOOCs are only the latest means for Yannis to reach students outside of Columbia: he is well known for his many short courses, organized and taught, around the world (a few of which are listed in the references [6–10]).

Any course taught by someone with such a long-standing enthusiasm for education could be expected to be well attended, and indeed Yannis' dozens of courses have been so over the years.

Yannis Tsividis' outstanding contributions to education at Columbia have been recognized by students and administration repeatedly. He has received the Great Teacher Award, Society of Columbia Graduates (1991), Distinguished Faculty Teaching Award, Columbia Engineering School Alumni Association (1998 and 2010), and Columbia's highest honor, the Presidential Award for Outstanding Teaching (2003). The larger engineering community honored him with the IEEE Undergraduate Teaching Award, 2005 and the IEEE Circuits and Systems Society Education Award in 2010.

It has been a privilege for me to write this brief summary of Yannis Tsividis' contributions to education. I am now his colleague, and from the broad picture of a school's curriculum to the mentorship of individual students, Yannis has shown me how to be an educator. The voice of Columbia's EE Department, and indeed of the School, to me, will always be his.

References

[1] Y. Tsividis and C. McAndrew, *Operation and Modeling of the MOS Transistor*. New York: Oxford Univ. Press, 2004.

[2] Y. Tsividis, "Teaching circuits and electronics to first-year students," in *Proc. 1998 IEEE Int. Symp. Circuits and Systems*, Monterey, May 31–June 3, 1998, vol. 1, pp. 424–427.

[3] Y. Tsividis, *A First Lab in Circuits and Electronics*. New York: Wiley, 2002.

[4] Y. Tsividis, "Turning students on to circuits," *IEEE Solid-State Circuits Soc. Mag.*, vol. 13, no. 1, pp. 6–9, Jan. 2008; also (updated) in *IEEE Circuits Syst. Mag.*, vol. 9, no. 1, pp. 58–63, First Quarter 2009.

[5] Available: https://www.coursera.org/course/mosfet

[6] "Design of MOS VLSI circuits for telecommunications," in *Scuola Superiore Guglielmo Reiss Romoli*, Aquila, Italy, June 18–29, 1984; Technical Program Director and Lecturer (supported by the European Economic Community).

[7] "Design of MOS VLSI circuits for telecommunications," in *Scuola Superiore Guglielmo Reiss Romoli Aquila*, Italy, July 1–12, 1985; Technical Program Director and Lecturer.

[8] "Design of MOS VLSI circuits for telecommunications," Puerto de Sta. Maria, Spain, June 16–27, 1986; Technical Program Director.

[9] "Design of MOS VLSI circuits for telecommunications," Tampere University of Technology, Tampere, Finland, June 10–22, 1988 (held in association with the IEEE ISCAS and sponsored by the IEEE CAS Society); Technical Program Director and Lecturer.

[10] "Design of VLSI circuits for telecommunications and signal processing," IST, Technical University of Lisbon, Lisbon, Portugal, June 18–29, 1990; Technical Program Director and Lecturer.

About the Author

David Vallancourt (dv82@columbia.edu) teaches in the EE Department, Fu Foundation School of Engineering and Applied Science, Columbia University. He received the BS (1981), MS (1983), and PhD (1987) degrees from Columbia, and was an Assistant Professor until joining AT&T Bell Labs in 1992. Dr. Vallancourt's focus at the Labs and subsequent positions at Texas Instruments, Vitesse Semiconductor, and PMC-Sierra was mixed-signal IC design for communications applications. In 2005 Dr. Vallancourt returned to Columbia, where he teaches courses for engineers and for non-engineers, including The Art of Engineering. Dr. Vallancourt has received the Columbia SEAS Distinguished Faculty Teaching Award (2007, 2013) and the Columbia Presidential Teaching Award (2013).

SSC

THETA2021114
IPR2023-00819
Theta EX2002