UNITED STATES PATENT AND TRADEMARK OFFICE

BEFORE THE PATENT TRIAL AND APPEAL BOARD

LENOVO (UNITED STATES) INC. and
MOTOROLA MOBILITY LLC,
Petitioner,

v.

THETA IP, LLC,
Patent Owner.

IPR2023-00694
Patent 7,010,330 B1

Before JEFFREY S. SMITH, THOMAS L. GIANNETTI, and
BARBARA A. BENOIT, *Administrative Patent Judges.*

GIANNETTI, *Administrative Patent Judge*.

DECISION
Denying Institution of *Inter Partes* Review
35 U.S.C. § 314

I. INTRODUCTION

Lenovo (United States) Inc. and Motorola Mobility LLC (collectively, "Petitioner") filed a Petition requesting institution of *inter partes* review of claims 1, 23, 29, and 30 ("the challenged claims") of U.S. Patent No. 7,010,330 B1 (Ex. 1001, "the '330 patent"). Paper 1 ("Pet."), 1. Theta IP, LLC ("Patent Owner") filed a Preliminary Response (Paper 9, "Prelim. Resp.").

Under 35 U.S.C. § 314(a), an *inter partes* review may not be instituted unless the information presented in the petition "shows that there is a reasonable likelihood that the petitioner would prevail with respect to at least 1 of the claims challenged in the petition." For the reasons stated below, we determine that Petitioner has not established a reasonable likelihood that it would prevail with respect to at least one claim. We, therefore, deny the Petition and do not institute *inter partes* review.

A. Real Parties in Interest

Petitioner identifies Lenovo (United States) Inc., Motorola Mobility LLC, and Lenovo Group Ltd as real parties in interest. Pet. 1. Patent Owner identifies itself as a real party in interest. Paper 4, 2 (Patent Owner's Mandatory Notices).

B. Related Matters

The parties indicate the '330 patent is involved in *Theta IP, LLC v. Motorola Mobility LLC*, No. 1:22-cv-03441 (N.D. Ill.). Pet. 1; Paper 4, 2. Patent Owner also identifies a concluded case that involved in the '330 patent: *Theta IP, LLC v. Samsung Electronics Co.*, No. 2:16-cv-527-JRG-RSP (E.D. Tex.). Paper 4, 2. Patent Owner additionally identifies a

concluded case that involved a patent related to the ’330 patent: *Theta IP, LLC v. Samsung Electronics Co.*, No. WA:20-cv-00160 (W.D. Tex.). *Id.*

The parties also each identify two concurrently filed petitions challenging patents related to the ’330 patent in IPR2023–00697 (challenging U.S. Patent No. 10,129,825 B2) and IPR2023–00698 (challenging U.S. Patent No. 10,524,202 B2). Pet. 1–2; Paper 4, 2.

C. The ’330 Patent (Ex. 1001)

The ’330 patent is titled “Power Dissipation Reduction in Wireless Transceivers.” Ex. 1001, (54). The patent relates to “us[ing] bias current reduction, impedance scaling, and gain changes either separately or in combination to reduce power dissipation.” *Id.* at (57).

The patent describes drain on battery life resulting from power consumed by wireless transmitters and receivers on various computers, including mobile devices, such as laptops and handheld computers. *Id.* at 1:19–30. According to the patent, a reason for high power drain “is that electronic circuits are typically designed to function properly under worst-case operating conditions . . . when a desired signal reception strength is low, while other transceivers or nearby electronic equipment generate interfering signals, and other spurious noise.” *Id.* at 1:31–37.

Figure 1 shows wireless transceiver 100 that “may benefit by incorporation of embodiments of the present invention” and having a receiver, transmitter, and synthesizer. *Id.* at 3:59–61; 4:1–2. The receiver portion of transceiver 100 shown in Figure 1 is reproduced below.

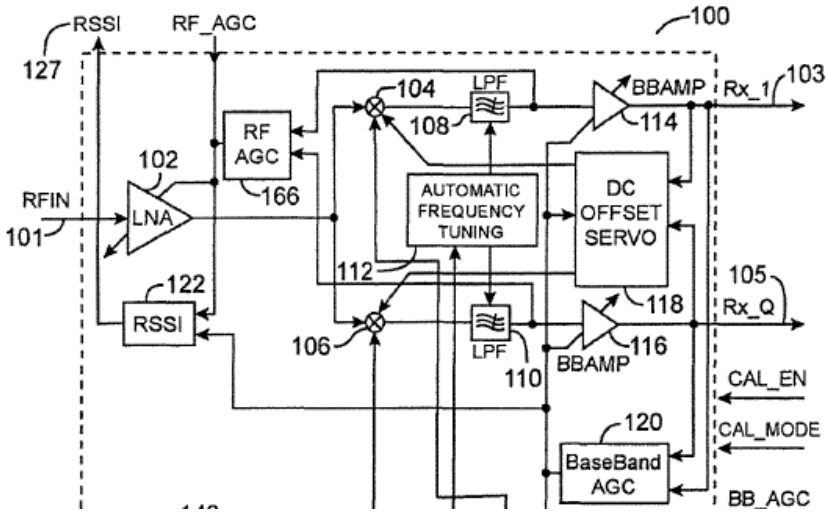

The excerpt of Figure 1, shown above, depicts a block diagram of the receiver portion of a transceiver. *Id.* at 3:11–13. "The receiver includes a signal path formed by low-noise amplifier 102, I and Q mixers 104 and 106, low pass filters 108 and 110, and baseband amplifiers 114 and 116." *Id.* at 4:15–17. The receiver also "includes received strength indicator 122, automatic gain control circuit 166, baseband gain control circuit 120, tuning circuit 112, and offset cancellation circuit 118." *Id.* at 4:17–21.

The patent explains that each block in the signal path of the receiver includes "the desired signal as well as noise and possibly interfering signals." *Id.* at 5:17–19. Referring to Figure 4 (not shown), the patent explains that a "comparison of the signal levels provided by signal strength indicators 440 and 450 indicates that much of the combined received signal on line 410 has been filtered." *Id.* at 7:1–3. This indicates "that large interfering signals present in the input are being filtered by filter 430," which allows optimizing "the bias, impedance, and gain of the gain stage 420 and filter 430" to reduce power dissipation. *Id.* at 7:5–8.

Referring to Figure 2 (not shown), the patent discloses that "[circuit impedances and currents are set such that the noise floor 264 is sufficiently

low for an acceptable bit-error rate, while bias currents are set sufficiently high for the required Smax 262." *Id.* at 6:7–10. According to the patent, when a signal is accompanied by no or low-level interferers, the noise floor may be allowed to rise in order to save power. *Id.* at 6:13–16. The noise floor may be increased by increasing the circuit's impedances. *Id.* at 10:15–16. This is illustrated in Figures 9B and 9C of the '330 patent that follow:

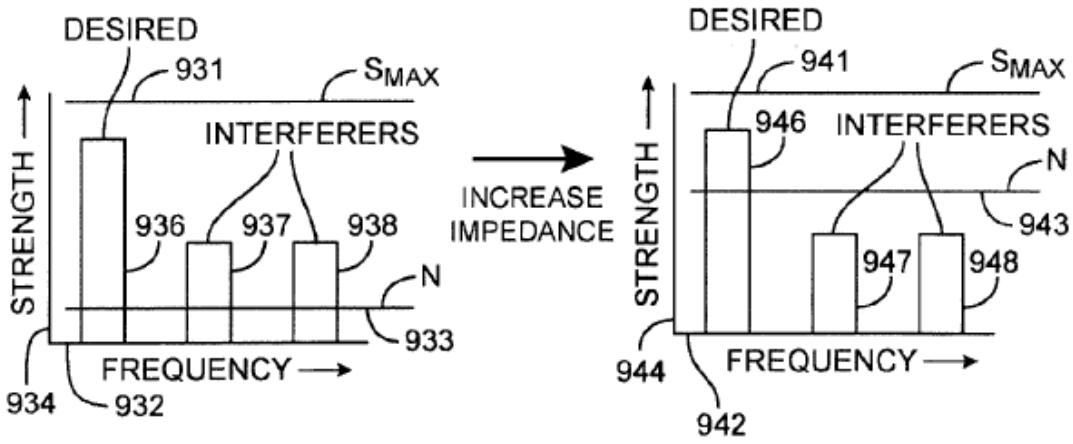

FIG. 9B FIG. 9C

Figures 9B and 9C illustrate one possible power saving technique that may be used in a "best case" scenario when a received desired signal is strong while all interfering signals are at a low power level. *Id.* at 3:33–36. The patent explains that in the example shown above in Figures 9B and 9C, a large signal may be detected by detecting a large signal at the input line and a large signal after a filter indicating a large signal is received at the desired frequency. *Id.* at 9:45–49.

Figure 9B shows a "spectrum for what may be considered a best-case received signal" when the "desired signal 936 is strong, while the interfering signals 937 and 938 are relatively weak." *Id.* at 9:41–45. Figure 9C depicts

increasing the impedance, resulting in a rise in the noise floor 943 and reducing the drive current. *Id.* at 9:53–57.

Other examples of methods of reducing power dissipation disclosed in the patent are illustrated in Figure 5 (increasing bias currents) and Figure 7 (inserting a gain element to improve the circuit's signal-to-noise ratio). *Id.* at 7:24–34, 8:1–11.

D. Illustrative Claim

The Petition challenges claims 1, 23, 29, and 30, of which claims 1, 23, and 29 are independent. Independent claim 1 is illustrative:

> 1. [i] A method of receiving a signal using an integrated circuit,
>
> [ii] the integrated circuit comprising a signal path including a low-noise amplifier configured to receive the signal,
>
> [iii] a mixer having an input coupled to an output of the low-noise amplifier, and
>
> [iv] a low-pass filter having an input coupled to an output of the mixer, the method comprising:
>
> [v] determining a first signal strength at a first node in the signal path in the integrated circuit; and
>
> [vi] *reducing a switching current in the signal path by dynamically changing an impedance of a component in the signal path based on the first signal strength*.

Ex. 1001, 12:57–67 (emphases added).[1]

[1] Bracketed paragraph references tracking those used by Patent Owner have been added.

E. Prior Art and Other Evidence

Petitioner relies upon the references listed below (Pet. 3–4).

Name	Reference	Publication/Issue Date	Exhibit No.
Rauhala	EP Patent App. Pub. No. 0999649 A2	May 10, 2000	1004
Cummins	U.S. Patent No. 6,278,864 B1	Aug. 21, 2001	1005
Meador	U.S. Patent No. 5,953,640	Sept. 14, 1999	1006
Furuno	U.S. Patent No. 5,086,508	Feb. 4, 1992	1007
Saito	U.S. Patent No. 5,513,387	Apr. 30, 1996	1008

Petitioner also relies on a Declaration of Dr. Jacob Baker. Ex. 1002 ("Baker Decl."). Patent Owner submits the Declaration of Dr. Lawrence E. Larson. (Ex. 2005, "Larson Decl.").

F. The Asserted Grounds of Unpatentability

Petitioner asserts the following grounds of unpatentability (Pet. 3–4):

Claim(s) Challenged	35 U.S.C. §[2]	References
1, 23	103(a)	Cummins, Rauhala
29	103(a)	Rauhala, Meador
30	103(a)	Rauhala, Meador, Furuno
1, 23	103(a)	Cummins, Rauhala, Saito

[2] For purposes of this Decision, we assume the claims at issue have an effective filing date prior to March 16, 2013, the effective date of the Leahy-Smith America Invents Act, Pub. L. No. 112-29, 125 Stat. 284 (2011) ("AIA"), and we apply the pre-AIA versions of 35 U.S.C. §§ 102 and 103.

Claim(s) Challenged	35 U.S.C. §[2]	References
29	103(a)	Rauhala, Meador, Saito
30	103(a)	Rauhala, Meador, Saito, Furuno

II. CLAIM CONSTRUCTION

In an *inter partes* review, we construe a patent claim "using the same claim construction standard that would be used to construe the claim in a civil action under 35 U.S.C. § 282(b)." 37 C.F.R. § 42.100(b) (2020). Under this standard, the words of a claim generally are given their "ordinary and customary meaning," which is the meaning the term would have to a person of ordinary skill at the time of the invention, in the context of the entire patent including the specification. *Phillips v. AWH Corp.*, 415 F.3d 1303, 1312–13 (Fed. Cir. 2005) (en banc).

A. Dynamically Changing/Adjusting

Petitioner proposes that the claim terms "dynamically changing" and "dynamically adjust[ed]" should be construed to mean "adjusting during operation based, at least in part, on information gained during operation." Pet. 20–25. Petitioner also contends that whether the Board construes these terms as proposed by Petitioner "does not impact the ultimate conclusion that the challenged claims are unpatentable." Pet. 25–26.

Patent Owner "does not believe that these 'dynamically' changing/adjusting terms need to be construed by the Board." Prelim. Resp. 23–24. However, if these terms are construed, Patent Owner agrees that they could be construed as proposed by Petitioner. *Id.*

We construe claim terms only as relevant to the parties' contentions and only to the extent necessary to resolve the issues in dispute. *See Vivid*

Techs., Inc. v. Am. Sci. & Eng'g, Inc., 200 F.3d 795, 803 (Fed. Cir. 1999); *Nidec Motor Corp. v. Zhongshan Broad Ocean Motor Co.*, 868 F.3d 1013, 1017 (Fed. Cir. 2017). Having considered the positions of the parties, we find that for the purpose of this decision, we do not need to construe this term to resolve a dispute.

B. Impedance

All challenged claims call for dynamically changing or adjusting or adjusting "an impedance." Ex. 1001, 12:65–66, 14:26–27, 16:20–21. Patent Owner contends that the claim term "impedance" "is well-known to mean the total opposition of a circuit to an alternating current." Prelim. Resp. 24. In support of its construction, Patent Owner relies on extrinsic evidence in the form of dictionary definitions, the declarations of Dr. Baker and Dr. Larson, as well as claim construction orders in two district court litigations. *See id.* at 24–26. Patent Owner also argues the '330 patent uses the term "impedance" "consistently with its ordinary definition of total opposition to the flow of alternating current." *Id.* at 26–29. Dr. Larson testifies that "[i]mpedance includes both resistance (from resistors) and reactance (from inductors or capacitors) to alternating current." Larson Decl. ¶ 54. He continues, "[i]mpedance is an alternating current (AC) circuit parameter, measured for signals with a frequency component." *Id.* ¶ 55.

Petitioner does not specifically address this issue. However, Petitioner contends that except for the terms "dynamically changing" and "dynamically adjust[ed]," "no express constructions are necessary to assess whether the prior art reads on the challenged claims." Pet. 20.

In light of the analysis of the patentability of the claims that follows, and having considered the positions of the parties, we find that for the

purpose of this decision, we do not need to construe this term to resolve a dispute. *See Vivid Techs.,* 200 F.3d at 803, *supra.*

C. Other Terms

We determine there are no other claim terms that need to be construed for this decision.

III. ANALYSIS

A. Principles of Law

A patent claim is unpatentable for obviousness under 35 U.S.C. § 103(a) if the differences between the claimed subject matter and the prior art are such that the subject matter, as a whole, "would have been obvious at the time the invention was made to a person having ordinary skill in the art to which said subject matter pertains." *KSR Int'l Co. v. Teleflex Inc*., 550 U.S. 398, 406 (2007). The question of obviousness is resolved on the basis of underlying factual determinations including: (1) the scope and content of the prior art; (2) any differences between the claimed subject matter and the prior art; (3) the level of ordinary skill in the art; and (4) objective evidence of non-obviousness. *See Graham v. John Deere Co.*, 383 U.S. 1, 17–18 (1966). [3]

B. Level of Ordinary Skill in the Art

In determining the level of ordinary skill in the art, various factors may be considered, including the "type of problems encountered in the art; prior art solutions to those problems; rapidity with which innovations are made; sophistication of the technology; and educational level of active

[3] Neither party presents evidence or arguments regarding objective evidence of non-obviousness at this stage.

workers in the field." *In re GPAC, Inc.*, 57 F.3d 1573, 1579 (Fed. Cir. 1995) (quotation marks omitted).

Petitioner asserts that a person of ordinary skill in the art of the '330 patent would have had "a bachelor's degree in electrical engineering, computer engineering, or the equivalent, and three or more years of experience with wireless communications devices." Pet. 4 (citing Baker Decl. ¶¶ 27–31). Petitioner further asserts, "[m]ore practical experience could qualify one not having the aforementioned education as a [person of ordinary skill in the art], while a higher level of education could offset lesser experience." *Id.*

Patent Owner asserts a person of ordinary skill in the art would have had at least:

> a Bachelor's Degree in Electrical or Electronics Engineering, along with approximately five years of relevant experience in the design of transceiver architecture, RF systems and components, and analog and mixed signal circuits, as well as experience in control algorithms for such system and familiarity with wireless standards—with additional education substituting for experience and vice versa.

Prelim. Resp. 21–22 (citing Larson Decl. ¶ 48).

The two proposals are materially similar in the education requirement, but differ marginally in professional experience required (three versus five years). *See supra*. While we are persuaded, on the present record, that both Petitioner's and Patent Owner's proposals are consistent with the problems and solutions in the '330 patent and the prior art of record, on balance, Petitioner's proposal is a better reflection of the level of skill in the prior art, and we, therefore, adopt it for this decision. Our decision would not change, however, if we had applied Patent Owner's proposed level of ordinary skill.

C. Overview of the Primary Prior Art References

1. Rauhala (Ex. 1004)

Rauhala discloses "a method and an arrangement for linearizing a radio receiver" that can be "applied in the reception circuits of mobile stations." Ex. 1004 ¶ 1. Rauhala explains that "[t]he quality of a signal in a radio receiver is degraded by noise and interference . . . indirectly caused by other radio signals. The latter refers to a situation in which a signal on a neighboring channel, which momentarily is considerably stronger than the signal to be received." *Id.* ¶ 2. Rauhala further indicates that "the signal quality can be improved by using more energy in the receiver," but notes that this "shortens the battery life." *Id.* ¶ 3.

Rauhala summarizes the "basic idea of the invention" as monitoring the signal strength on the receive channel and neighboring channels and determining the quality of the detected signal. *Id.* ¶ 6. "[W]hen the signal strength is satisfactory on the receive channel and ordinary on the neighboring channels, the supply currents of the receiver's front-end amplifiers and at least the first mixer are kept relatively low." *Id.* "If the signal strength goes below a certain value on the receive channel or exceeds a certain value on the neighboring channel, said supply currents are increased." *Id.* Rauhala indicates that an "advantage of the invention is that the energy consumption of the receiver can be reduced without degrading the signal quality," which "means longer life for the battery." *Id.* ¶ 7.

Figure 1 of Rauhala, shown below, is "a simplified example of a radio receiver without the low-frequency components." *Id.* ¶ 12.

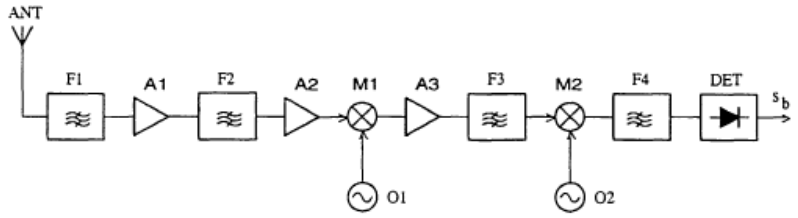

Fig. 1

Figure 1 depicts a radio receiver that includes an antenna ANT coupled to a series of "linear units" of filters (F1–F4), amplifiers (A1–A3), and mixers (M1, M2), with each mixer connected to an oscillator (O1, O2). *Id.* As shown, the output of filter F4 is coupled to a detector DET, which provides a baseband signal s_b. *Id.*

Figure 7 of Rauhala is depicted below.

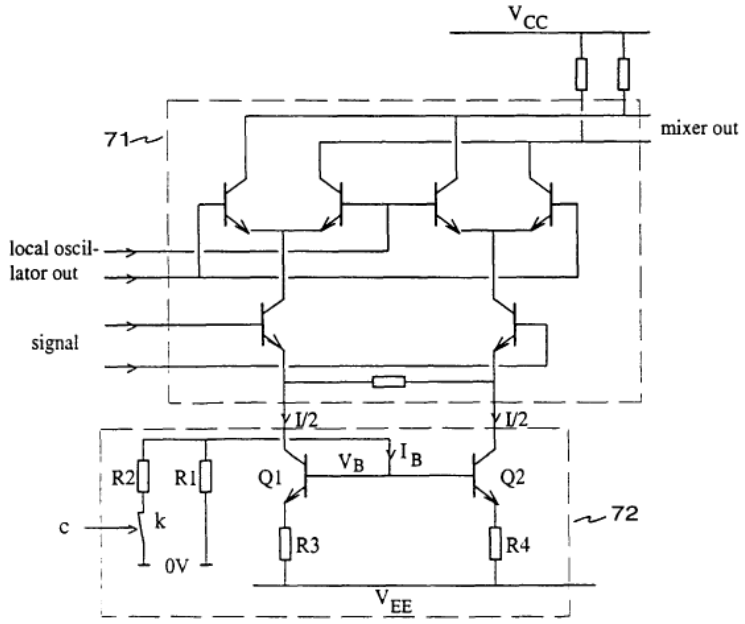

Fig. 7

Figure 7 illustrates an example of a linear unit's supply current control. Ex. 1004 ¶ 23. Figure 7 includes linear unit 71 and control circuit 72. *Id.* The control circuit 72 contains transistors Q1 and Q2, resistors R1 through R4,

and switch k. *Id.* Resistors R1 and R2 are connected in parallel with one end of the connection, "coupled to signal ground and the other end to the bases of transistors Q1 and Q2." *Id.* When switch k is open, "the control current I_B of transistors Q1 and Q2 is V_B/R1," and when switch k is closed, "the control current I_B is V_B/R1 + V_B/R2." *Id.* Rauhala indicates that by closing switch k "the current I_B increases, causing the supply current I to increase as well." *Id.*

2. Cummins (Ex. 1005)

Cummins relates to a "compact low-power radio frequency (RF) transceiver with a built-in antenna." Ex. 1005, (57).

Figure 2A of Cummins is reproduced below:

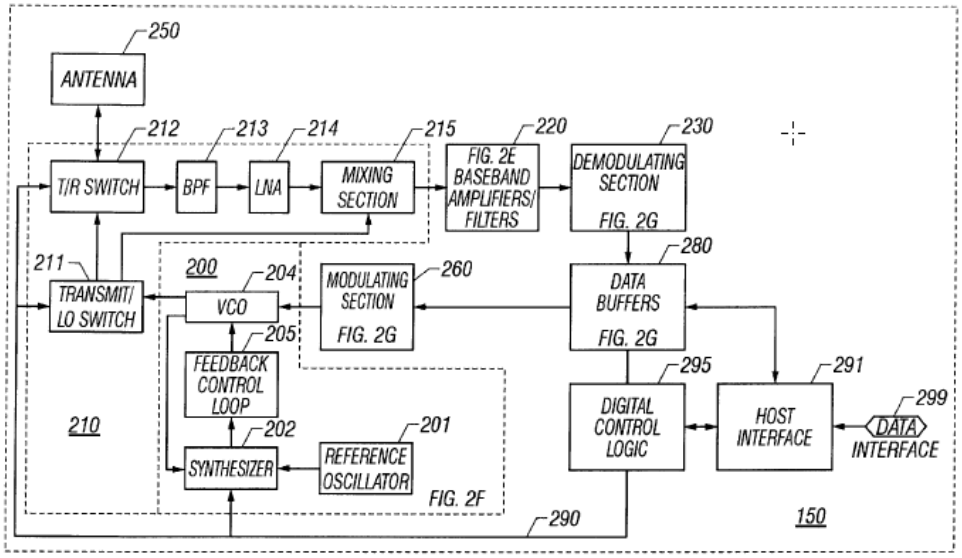

FIG. 2A

Figure 2A of Cummins depicts a simplified block diagram of a transceiver. *Id.* at 5:44–45. The transceiver contains antenna 250 that both transmits and receives signals. *Id.* at 5:63–6:2. Cummins discloses that when in receive mode, "switch 212 routes the signal received via antenna 250 through a broad band filter 213 to the input of low noise amplifier (LNA) 214 for

amplification before being applied to the mixing section 215." *Id.* 5:66–6:2. The output of the mixing section "is amplified in the baseband amplifiers/filters 220" and then "demodulated in demodulating section 230." *Id.* at 6:4–9. The resulting stream of data bytes are then stored in data buffers 280 prior to transfer to a host computer. *Id.* at 6:7–11.

D. Obviousness of Claims 1 and 23 over Cummins and Rauhala

Petitioner asserts that claims 1 and 23 are unpatentable under 35 U.S.C. § 103(a) as obvious over Cummins and Rauhala. Pet. 26–47; Baker Decl. ¶¶ 99–184. Patent Owner contends Rauhala fails to disclose or suggest several limitations founds in claims 1 and 23. *See* Prelim. Resp. 18–20, 30–47; Larson Decl. ¶¶ 59–68.

Upon consideration of Petitioner's explanations and supporting evidence in this current record, and Patent Owner's arguments and supporting evidence, we are not persuaded that Petitioner has demonstrated a reasonable likelihood of prevailing in showing that claims 1 and 23 would have been obvious over Cummins and Rauhala.

i. Claim 1

Petitioner asserts that each limitation of claim 1 is taught by the combination of Cummins and Rauhala. Pet. 26–46; Baker Decl. ¶¶ 99–140. For example, for preamble limitation 1[i], ("A method of receiving a signal . . ."), Petitioner contends Cummins discloses a transceiver disposed on an integrated circuit and containing a low noise amplifier, mixing section, and a baseband amplifiers/filters section. Pet. 26–31; Baker Decl. ¶¶ 100–102; *see also* Ex. 1005 at Figs. 2A–2F. Similarly, Petitioner relies on Cummins to meet limitations 1[ii] through 1[iv]. Pet. 27–31; Baker Decl. ¶¶ 103–105.

Petitioner relies on Rauhala for the remaining steps of claim 1. Pet. 31–46; Baker Decl. ¶¶ 106–140. For claim limitation 1[v] ("determining a first signal strength at a first node in the signal path in the integrated circuit"), Petitioner contends that Rauhala "discloses determining a first signal strength in the signal path." Pet. 31–35; Baker Decl. ¶¶ 106–117. Petitioner contends that Rauhala "teaches that '[d]etector DET provides information about the signal strength (RSS) on the channel to which the receiver is tuned.'" Pet. 32 (alteration in original).

Referring to Figure 7, Petitioner contends that Rauhala meets claim limitation 1[vi] ("reducing a switching current in the signal path by dynamically changing an impedance of a component in the signal path based on the first signal strength") by disclosing "reducing the collector current (I/2), by increasing (i.e., changing) the impedance of control circuit 72." *Id.* at 42 (citing Ex. 1004 ¶ 23; Baker Decl. ¶ 133). Petitioner contends that Rauhala discloses switching between two different resistance configurations depending on a value of a switch k (open or closed). *Id.* at 39–40 (citing Ex. 1004 ¶ 23, Fig. 7; Baker Decl. ¶ 127). Depending on the value of switch k, according to Petitioner, the impedance can be set to a high or low value. *Id.* at 40–42.

ii. Claim 23

For independent claim 23, Petitioner's analysis refers back to the arguments and evidence recited with respect to claim 1. Pet. 46–47. For the additional limitations in this claim, Petitioner relies on Cummins or Cummins and Rauhala. *Id.*

iii. Patent Owner's Response

Patent Owner contests Petitioner's analysis for claim limitation 1[vi] (". . . dynamically changing an impedance of a component in the signal path"). as well as the corresponding final limitation of claim 23 ("wherein an impedance in the signal path . . . ."). Prelim. Resp. 30–47; Larson Decl. ¶¶ 59–68. Specifically, Patent Owner challenges whether Rauhala teaches three elements of independent claims 1 and 23: (a) changing/adjusting an "impedance," (b) changing/adjusting an impedance in the "signal path," and (c) "reducing a switching current." Prelim. Resp. 30.

a. "dynamically changing an impedance in the signal path"

Claim limitation 1[vi] calls for "dynamically changing an impedance of a component in the signal path."[4] For this claim element, Patent Owner contends that "impedance" refers to the opposition of a circuit to alternating current, and Rauhala relates only to direct or quiescent supply currents. Prelim. Resp. 31–37. Specifically, according to Patent Owner, the only impedance change alleged by Petitioner "is entirely resistive, and critically, *applies only to a static DC current* I_B." *Id.* at 33.

Claim limitation 1[vi] also calls for "changing an impedance of a component in the signal path." For this claim element, Patent Owner contends that switching the resistance of a control circuit in Rauhala is not changing an impedance "in the signal path" as claimed. Prelim. Resp. 37–41. Specifically referring to Figure 7 of Rauhala, Patent Owner contends that "the signal path from differential 'signal' input to differential output 'mixer out,' in 'multiplier 71' . . . is separate and apart from 'control circuit

[4] Claim 23 similarly calls for "an impedance *in the signal path* is configured to be dynamically adjusted." Ex. 1001 at 14:26–28 (emphasis added).

72' for the supply current." *Id.* at. 38 (citing Ex. 1004 ¶¶ 21, 23, Figs. 6, 7; Larson Decl. ¶¶ 63, 66). According to Patent Owner, therefore, even if Rauhala discloses changing an impedance (which Patent Owner does not concede)[5], Rauhala does not disclose changing an impedance specifically "of a component in the signal path" as claimed. *Id.*

b. "reducing a switching current"

Claim limitation 1[vi] also calls for "reducing a switching current." Ex. 1001, 12:65.[6] For this claim element, Patent Owner contends that Petitioner is "attempting to argue around the distinction made during prosecution—between bias current and switching currents—by pointing to the indirect effects on the rest of a circuit that can arise from changing the bias current." Prelim. Resp. 43. According to Patent Owner, reducing a switching current via an impedance increase is different from reducing a bias current. *Id.* at 44–45. Patent Owner contends that a person of ordinary skill would understand the claim requires "changing an impedance in the signal path to, e.g., directly attenuate a switching driver current." *Id.* at 46 (citing Ex. 1001 at 6:44–59).

c. Other Arguments

Patent Owner argues that Petitioner's "argumentative conclusions about disclosure in *Rauhala* are not supported by evidence." Prelim. Resp. 47–51. Patent Owner contends that several portions of Petitioner's expert's

[5] Patent Owner's proposed construction of the term "impedance" is discussed in Section II.B, *supra*.
[6] Claim 23 similarly calls for "reduc[ing] a switching current." Ex. 1001 at 14:26–28.

supporting declaration are "a verbatim copy of counsel's arguments in the Petition." *Id.* at 48–51.

iv. Summary and Conclusion

Based on the evidence in the present record, we are not persuaded that Petitioner has demonstrated a reasonable likelihood of prevailing in showing that claims 1 and 23 would have been obvious over Cummins and Rauhala. We agree with Patent Owner that even if we were to accept Petitioner's argument that "switching Rauhala's DC bias current I_B from V_B/R1 to V_B/R1+V_B/R2 were changing an impedance as claimed, . . . that still would not be changing an impedance of a component 'in the signal path' as required by the claim language of each challenged claim." Prelim. Resp. 39 (emphasis omitted). This distinction between Rauhala's disclosure and the requirements of the challenged claims is illustrated by Patent Owner's annotated Figure 7, reproduced below. Prelim. Resp. 38.

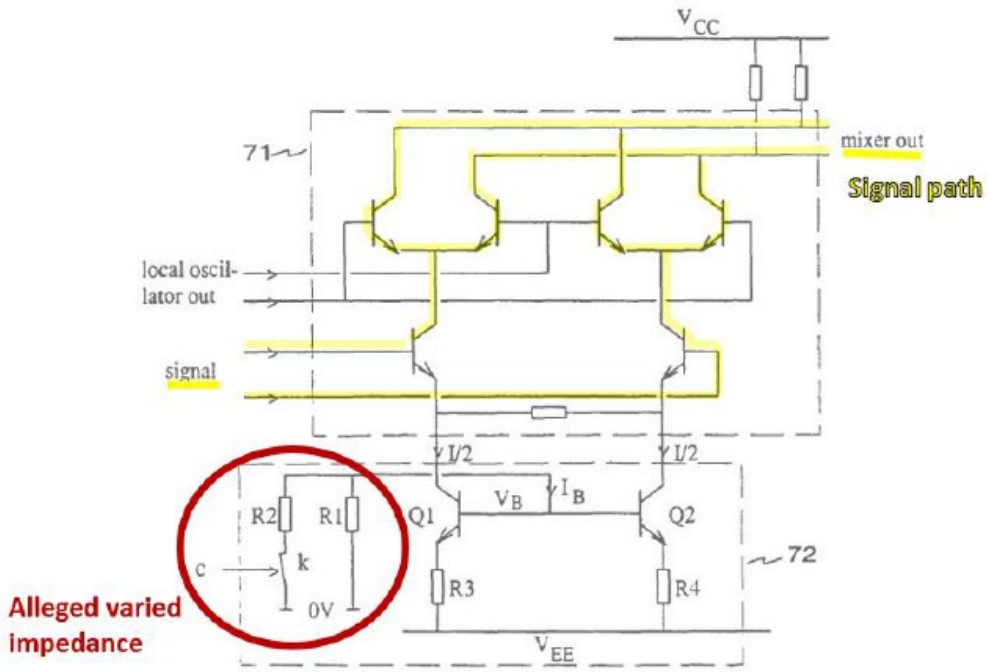

Fig. 7

Figure 7 of Rauhala has been annotated by Patent Owner to show that current supply circuit 72 (including resistors R1 and R2 and switch k) is outside the signal path (highlighted in yellow) through linear unit 71. Prelim. Resp. 38. Petitioner identifies R1, R2, and switch k in control circuit 72 as the claimed variable impedance. *See*, e.g., Pet. 39–40. The Petition (and the supporting Baker Declaration) do not explain adequately how, under this interpretation by Petitioner and its expert, Rauhala meets the "component in the signal path" limitation. *See* Prelim. Resp. 39–41.

For the reasons given, therefore, we agree with Patent Owner that Petitioner fails to demonstrate sufficiently that Rauhala meets the limitation in claim 1 requiring "dynamically changing an impedance of a component in the signal path" and the corresponding limitation in claim 23.

We, therefore, determine that Petitioner has not demonstrated a reasonable likelihood of prevailing on this challenge to those claims.

E. Obviousness of Claim 29 over Rauhala and Meador

Claim 29, similar to claims 1 and 23, recites the dynamic adjustment of impedance by calling for an impedance in a second circuit to be "configured to be dynamically adjusted." Ex. 1001, 16:11–13. Claim 29 also requires the "second circuit" to be part of the signal path. *Id.* at 15:22–16:3. Petitioner relies on Rauhala to meet this limitation. Pet. 56 (citing the impedance of control circuit 72).

For the reasons given in connection with claims 1 and 23, Patent Owner's argument that Rauhala does not adjust an impedance in the "signal path" is persuasive also as to claim 29. *See* Prelim. Resp. 20, 37–41.

Based on the evidence in the present record and for the same reasons provided above in Section III.D, we are not persuaded that Petitioner has demonstrated a reasonable likelihood of prevailing in showing that claim 29 would have been obvious over Rauhala and Meador.

F. Obviousness of Claim 30 over Rauhala, Meador, and Furuno

Claim 30 depends from claim 29. Patent Owner argues Petitioner has not shown a reasonable likelihood of invalidating claim 30 for the same reasons argued with respect to claim 29. Prelim. Resp. 20–21.

Therefore, based on the evidence in the present record and for the same reasons provided above in our discussion of claim 29 in Section III.E, *supra*, we are not persuaded that Petitioner has demonstrated a reasonable likelihood of prevailing in showing that claim 30 is obvious over Rauhala, Meador, and Furuno.

G. Obviousness of Claims 1 and 23 over Cummins, Rauhala, and Saito

Petitioner asserts that claims 1 and 23 are unpatentable under 35 U.S.C. § 103(a) as obvious over Cummins, Rauhala, and Saito. Pet. 61–67; Baker Decl. ¶¶ 236. Petitioner relies on Saito to teach "dynamically changing" to the extent this term is interpreted "to require adjustment without reliance upon a signal strength threshold." Pet. 62. Petitioner does not rely on Saito to teach the limitations of claims 1 and 23 alleged to be missing in Rauhala by Patent Owner, such as the limitations relating to adjusting impedance. *See* Pet. 62–65; Prelim. Resp. 30–51.

Therefore, based on the evidence in the present record and for the same reasons provided above in Section III.D, we are not persuaded that Petitioner has demonstrated a reasonable likelihood of prevailing in showing that claims 1 and 23 would have been obvious over Cummins, Rauhala, and Saito.

H. Obviousness of Claim 29 over Rauhala, Meador, and Saito

Petitioner asserts that claim 29 is unpatentable under 35 U.S.C. § 103(a) as obvious over Rauhala, Meador, and Saito. Pet. 67–70; Baker Decl. ¶¶ 187–227, 250. Petitioner relies on Saito to teach "dynamically changing" to the extent this term is interpreted "to require adjustment without reliance upon a signal strength threshold." Pet. 68. Petitioner does not rely on Saito to teach the limitations of claim 29 alleged by Patent Owner to be missing in Rauhala. *See* Pet. 67–70; Prelim. Resp. 30–51.

Based on the evidence in the present record and for the same reasons provided above in Section III.E, we are not persuaded that Petitioner has demonstrated a reasonable likelihood of prevailing in showing that claim 29 would have been obvious over Rauhala, Meador, and Saito.

I. Obviousness of Claim 30 over Rauhala, Meador, Saito, and Furuno

Claim 30 depends from claim 29. Patent Owner argues Petitioner has not shown a reasonable likelihood of invalidating claim 30 for the same reasons argued with respect to claim 29. Prelim. Resp. 20–21.

Therefore, based on the evidence in the present record and for the same reasons provided above in Section III.E, we are not persuaded that Petitioner has demonstrated a reasonable likelihood of prevailing in showing that claim 30 would have been obvious over Rauhala, Meador, Saito, and Furuno.

IV. CONCLUSION

For the foregoing reasons, we have determined that Petitioner has not shown a reasonable likelihood of prevailing with respect to any claims. Thus, we do not institute an *inter partes* review.

V. ORDER

For the foregoing reasons, it is

ORDERED that the Petition is *denied*, and no trial is instituted.

FOR PETITIONER:

Dinesh Melvani
Jameson Ma
BOOKOFF McANDREWS PLLC
dmelwani@bomcip.com
jma@bomcip.com

FOR PATENT OWNER:

Aaron Hand
BUNSOW DE MORY LLP
ahand@bdiplaw.com