Trials@uspto.gov
571-272-7822

Paper 31
Entered: October 16, 2024

UNITED STATES PATENT AND TRADEMARK OFFICE

---

BEFORE THE PATENT TRIAL AND APPEAL BOARD

---

LENOVO (UNITED STATES) INC. and
MOTOROLA MOBILITY LLC,
Petitioner,

v.

THETA IP, LLC,
Patent Owner.

---

IPR2023-00698
Patent 10,524,202 B2

---

Before JEFFREY S. SMITH, THOMAS L. GIANNETTI, and BARBARA A. BENOIT, *Administrative Patent Judges.*

GIANNETTI, *Administrative Patent Judge*.

JUDGMENT
Final Written Decision
Determining No Challenged Claims Unpatentable
*35 U.S.C. § 318(a)*

# I. INTRODUCTION

Lenovo (United States) Inc. and Motorola Mobility LLC (collectively, "Petitioner") filed a Petition requesting institution of *inter partes* review of claims 7–11, 13, and 19–21 ("the challenged claims") of U.S. Patent No. 10,524,202 B2 (Ex. 1001, "the '202 patent"). Paper 1 ("Pet."), 1. Theta IP, LLC ("Patent Owner") filed a Preliminary Response (Paper 9, "Prelim. Resp.").

We determined that the Petition established a reasonable likelihood that Petitioner would prevail with respect to at least one claim, and we instituted *inter partes* review as to all challenged claims of the '202 patent and all grounds of unpatentability asserted in the Petition. Paper 10 ("Institution Dec.").

Following institution of the trial, Patent Owner filed a Response (Paper 15, "PO Resp."), Petitioner filed a Reply (Paper 19, "Pet. Reply"), and Patent Owner filed a Sur-reply (Paper 21, "PO Sur-reply").

A consolidated oral hearing with IPR2023-00697 was held on July 24, 2024. A transcript of the hearing is part of the record. Paper 30 ("Hearing Tr.").

We have jurisdiction under 35 U.S.C. § 6. This decision is a Final Written Decision issued pursuant to 35 U.S.C. § 318(a). For the reasons we discuss below, we determine that Petitioner has not proven by a preponderance of the evidence that any of the challenged claims of the '202 patent are unpatentable.

## *A. Real Parties in Interest*

Petitioner identifies Lenovo (United States) Inc., Motorola Mobility LLC, and Lenovo Group Ltd as real parties in interest. Pet. 1. Patent Owner

identifies itself as a real party in interest. Paper 4, 2 (Patent Owner's Mandatory Notices).

*B. Related Matters*

The parties indicate the '202 patent is involved in *Theta IP, LLC v. Motorola Mobility LLC*, No. 1:22-cv-03441 (N.D. Ill.) ("Illinois Litigation"). Pet. 1; Paper 4, 2. Patent Owner also identifies a concluded case that involved in the '202 patent: *Theta IP, LLC v. Samsung Electronics Co.*, No. WA:20-cv-00160 (W.D. Tex.). Paper 4, 2. Patent Owner additionally identifies a concluded case that involved a patent related to the '202 patent: *Theta IP, LLC v. Samsung Electronics Co.*, No. 2:16-cv-527-JRG-RSP (E.D. Tex.). *Id.*

The parties also each identify two concurrently-filed petitions challenging patents related to the '202 patent in IPR2023–00694 (challenging U.S. Patent No. 7,010,330 B1) and IPR2023–00697 (challenging U.S. Patent No. 10,129,825 B2). Pet. 1–2; Paper 4, 2. The petition in IPR2023-00694 was denied. *See* IPR2023-00694, Paper 10. Trial was instituted in IPR2023-00697. *See* IPR2023-00697, Paper 10.

*C. The '202 Patent (Ex. 1001)*

The '202 patent is titled "Power Dissipation Reduction in Wireless Transceivers." Ex. 1001, (54). The patent relates to "us[ing] bias current reduction, impedance scaling, and gain changes either separately or in combination to reduce power dissipation." *Id.* at (57).

The patent describes drain on battery life resulting from power consumed by wireless transmitters and receivers on various computers, including mobile devices such as laptops and handheld computers. *Id.* at 1:24–35. According to the patent, a reason for high power drain "is that

electronic circuits are typically designed to function properly under worst-case operating conditions . . . when a desired signal reception strength is low, while other transceivers or nearby electronic equipment generate interfering signals and other spurious noise." *Id.* at 1:36–42.

The patent explains that "[w]hen a receiver is actively receiving a desired signal, each block in the signal path has at its input the desired signal as well as noise and possibly interfering signals." *Id.* at 5:22–24. "The desired signal is the useful, information-carrying portion of a received signal." *Id.* at 5:24–26. The patent also refers to an interfering signal or signals as "interferers." *Id.* at 5:30–31.

Exemplary signals are depicted in Figures 2A and 2B, reproduced below.

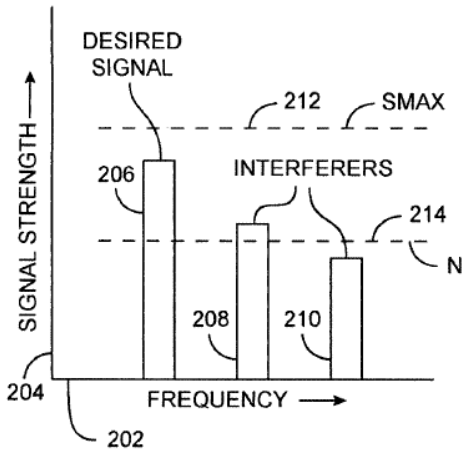


FIG. 2A

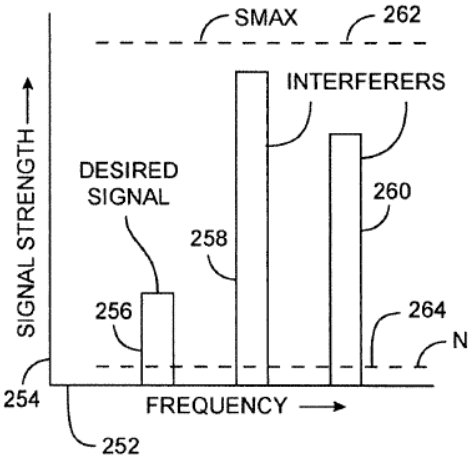


FIG. 2B

Figures 2A and 2B illustrate "desired and interfering signals and noise that may be received by a circuit in a wireless receiver." *Id.* at 3:19–21.

As shown in Figure 2A, "received desired signal 206 is large in comparison to interfering signals 208 and 210," which represents "the best-case input signal." *Id.* at 5:38–39, 6:16–18. As the patent explains, the

best-case input signal is "a robust desired signal accompanied by no or low-level interferers." *Id.* at 6:17–18. In such a case, according to the patent, the receiver circuit can save significant power by allowing noise floor 214 to rise and reducing the maximum signal power that can be handled with an acceptably low distortion (Smax 212). *Id.* at 5:46–51, 6:18–21. For example, bias currents may be lowered to reduce the maximum signal handling capability. As shown in Figure 2B, received "desired signal 256 is relatively weak compared to the large interferers 258 and 260," which "is generally considered the worst-case input signal." *Id.* at 5:56–58, 6:8–9.

Referring to Figure 2, reproduced *supra*, the patent discloses that "[c]ircuit impedances and currents are set such that the noise floor 264 is sufficiently low for an acceptable bit-error rate, while bias currents are set sufficiently high for the required Smax 262." *Id.* at 6:12–15. According to the patent, when a signal is accompanied by no or low-level interferers, the noise floor may be allowed to rise in order to save power. *Id.* at 6:18–20. The noise floor may be increased by increasing the circuit's impedances. *Id.* at 10:20–21.

Figures 9B and 9C of the '202 patent follow:

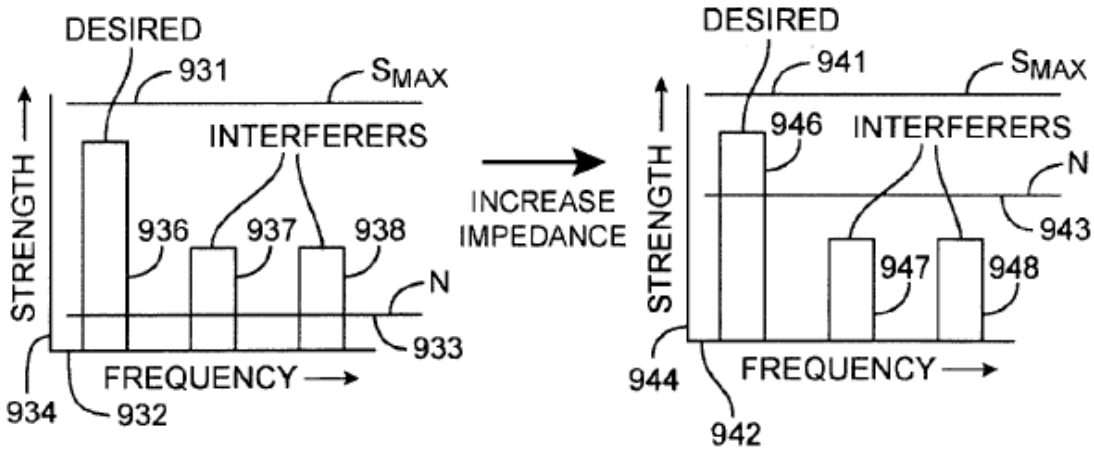


FIG. 9B FIG. 9C

Figures 9B and 9C illustrate one possible power saving technique. *Id.* at 3:38–41. In the example shown in Figures 9B and 9C, the patent explains that a large signal may be detected "by detecting a large signal level at the input line" and "a large signal level after a filter." *Id.* at 9:50–54. Figure 9B shows a "spectrum for what may be considered a best-case received signal" when the "desired signal 936 is strong, while the interfering signals 937 and 938 are relatively weak." *Id.* at 9:47–50. Figure 9C depicts increasing the impedance, resulting in a rise in noise floor 943 and reducing the drive current. *Id.* at 9:58–62.

Other examples of methods of reducing power dissipation disclosed in the patent are illustrated in Figure 5 (increasing bias currents) and Figure 7 (inserting a gain element to improve the circuit's signal-to-noise ratio). *Id.* at 7:29–39, 8:6–16.

*D. Illustrative Claim*

The Petition challenges claims 7–11, 13, and 19–21, of which claims 7, 11, 13, and 19 are independent. Independent claim 7 is illustrative:

> [7.1] A method for power dissipation control in a receiver of a wireless transceiver of a battery-powered portable wireless device,
>
> [7.2] the receiver having a signal path comprising a plurality of circuits including at least an amplifier, a filter, and a mixer,
>
> [7.3] *wherein the receiver is configured to receive a wireless signal having a desired signal and an interferer signal*,
>
> [7.4] wherein the plurality of circuits are designed to function between a worst-case condition when a strength of the desired signal is low and a strength of the interferer signal is high,
>
> [7.5] and a best-case condition when the strength of the desired signal is high and the strength of the interferer signal is low, the method comprising:
>
> > [7.6] receiving the wireless signal having the desired signal and the interferer signal by the receiver;
> >
> > [7.7] *determining the strength of the desired signal*;
> >
> > [7.8] *determining the strength of the interferer signal*;
> >
> > [7.9] comparing the strength of the desired signal relative to the strength of the interferer signal; and
> >
> > [7.10] based on the comparison, when the plurality of circuits are functioning at better than the worst-case condition,
> >
> > [7.11] dynamically adjusting one or more of an impedance, a bias or a gain of one or more of the plurality of circuits in the signal path, thereby controlling power dissipation.

Ex. 1001, 13:58–14:14 (emphases added).[1]

[1] Bracketed paragraph references and paragraphing tracking those used by Petitioner have been added. Disputed limitations are italicized.

*E. Prior Art and Other Evidence*

Petitioner relies upon the references listed below (Pet. 3–4).

| Name | Reference | Publication/Issue Date | Exhibit No. |
|---|---|---|---|
| Rauhala | EP Patent App. Pub. No. 0999649 A2 | May 10, 2000 | 1004 |
| Saito | U.S. Patent No. 5,513,387 | Apr. 30, 1996 | 1005 |

Petitioner also relies on a pre-institution Declaration of Dr. Jacob Baker (Ex. 1002, "Baker I Decl.") and a post-institution Declaration of Dr. Baker (Ex. 1019, Baker II Decl.) Patent Owner submits a pre-institution declaration of Dr. Lawrence E. Larson (Ex. 2005, "Larson I Decl.") and a post-institution declaration of Dr. Larson (Ex. 2015, "Larson II Decl.). The parties have also submitted deposition transcripts for Dr. Baker and Dr. Larson.[2]

*F. The Asserted Grounds of Unpatentability*

Petitioner asserts the following grounds of unpatentability (Pet. 3–4):

| Claims Challenged | 35 U.S.C. §[3] | Reference(s) |
|---|---|---|
| 7–11, 13, 19–21 | 102(b) | Rauhala |
| 7–11, 13, 19–21 | 103(a) | Rauhala, Saito |

## II. CLAIM CONSTRUCTION

In an *inter partes* review, we construe a patent claim "using the same claim construction standard that would be used to construe the claim in a

[2] Ex. 1018 ("Larson Dep."); Ex. 2016 ("Baker Dep.").
[3] Because the claims at issue have an effective filing date prior to March 16, 2013, the effective date of the Leahy-Smith America Invents Act, Pub. L. No. 112-29, 125 Stat. 284 (2011) ("AIA"), we apply the pre-AIA versions of 35 U.S.C. §§ 102 and 103.

civil action under 35 U.S.C. § 282(b)." 37 C.F.R. § 42.100(b) (2020). Under this standard, the words of a claim generally are given their "ordinary and customary meaning," which is the meaning the term would have to a person of ordinary skill at the time of the invention, in the context of the entire patent including the specification. *Phillips v. AWH Corp.*, 415 F.3d 1303, 1312–13 (Fed. Cir. 2005) (en banc).

*A. Dynamically Adjusting*[4]

Petitioner proposes that the claim term "dynamically adjusting" should be construed to mean "adjusting during operation based, at least in part, on information gained during operation." Pet. 18–23. Petitioner also contends that whether the Board construes this term as proposed by Petitioner "does not impact the ultimate conclusion that the challenged claims are unpatentable." *Id.* at 23.

Patent Owner responds that "[i]n light of [Petitioner's] complete failure to show disclosure of other elements," these terms do not need to be construed by the Board. PO Resp. 28.

We construe claim terms only as relevant to the parties' contentions and only to the extent necessary to resolve the issues in dispute. *See Vivid Techs., Inc. v. Am. Sci. & Eng'g, Inc.*, 200 F.3d 795, 803 (Fed. Cir. 1999); *Nidec Motor Corp. v. Zhongshan Broad Ocean Motor Co. Matal*, 868 F.3d 1013, 1017 (Fed. Cir. 2017). Having considered the positions of the parties, we find that for the purpose of this decision, we do not need to construe these terms to resolve a dispute.

[4] Petitioner also argues that terms "dynamically increasing/reducing/ decreased/increased" should also be construed consistently with "dynamically adjusting." Pet. 23.

### *B. Impedance*

Independent claims 7 and 19 call for "dynamically adjusting one or more of an impedance, a bias or a gain." Ex. 1001, 14:11–12, 17:35–36.

Patent Owner asserts, "[i]n this Petition, [Petitioner], and its declarant Dr. Baker, admit that impedance has a well-known meaning, and that it is an AC circuit parameter." PO Resp. 29 (citing Pet. 41; Baker I Decl. ¶ 134).

Petitioner replies "that the term 'impedance' does not require construction." Pet. Reply 3. Petitioner adds that "if the Board deems it necessary to construe this term in light of [Patent Owner's] arguments, the Board should reject [Patent Owner's] definition of 'impedance' and give the term its plain and ordinary meaning." *Id.*

Our patentability analysis of the claims that follows does not turn on any particular construction of "impedance." Having considered the positions of the parties, we find that for the purpose of this Decision, we do not need to construe this term or any other terms to resolve a dispute. *See Vivid Techs.*, 200 F.3d at 803.

## III. ANALYSIS

### *A. Principles of Law*

"A claim is anticipated only if each and every element as set forth in the claim is found, either expressly or inherently described, in a single prior art reference." *Verdegaal Bros., Inc. v. Union Oil Co. of Cal.*, 814 F.2d 628, 631 (Fed. Cir. 1987). When evaluating a single prior art reference in the context of anticipation, the reference must be "considered together with the knowledge of one of ordinary skill in the pertinent art." *In re Paulsen*, 30 F.3d 1475, 1480 (Fed. Cir. 1994) (citing *In re Samour*, 571 F.2d 559, 562 (CCPA 1978)).

A patent claim is unpatentable for obviousness under 35 U.S.C. § 103(a) if the differences between the claimed subject matter and the prior art are such that the subject matter, as a whole, "would have been obvious at the time the invention was made to a person having ordinary skill in the art to which said subject matter pertains." *KSR Int'l Co. v. Teleflex Inc.*, 550 U.S. 398, 406 (2007). The question of obviousness is resolved on the basis of underlying factual determinations including: (1) the scope and content of the prior art; (2) any differences between the claimed subject matter and the prior art; (3) the level of ordinary skill in the art; and (4) objective evidence of non-obviousness. *See Graham v. John Deere Co.*, 383 U.S. 1, 17–18 (1966). [5]

*B. Level of Ordinary Skill in the Art*

In determining the level of ordinary skill in the art, various factors may be considered, including the "type of problems encountered in the art; prior art solutions to those problems; rapidity with which innovations are made; sophistication of the technology; and educational level of active workers in the field." *In re GPAC, Inc.*, 57 F.3d 1573, 1579 (Fed. Cir. 1995) (quotation marks omitted).

Petitioner asserts that a person of ordinary skill in the art of the '202 patent would have had "a bachelor's degree in electrical engineering, electronics engineering, or the equivalent, and two or more years of experience in wireless communications devices including transceivers and circuitry thereon." Pet. 5 (citing Baker I Decl. ¶¶ 28–32). Petitioner also asserts that "[s]ignificantly more practical experience could also qualify one

[5] Neither party presents evidence or arguments regarding objective evidence of non-obviousness.

not having the aforementioned education as a person of ordinary skill in the art, while, conversely, a higher level of education could offset a lesser amount of practical experience." *Id.*

Patent Owner asserts that a person of ordinary skill in the art would have had at least:

> a Bachelor's Degree in Electrical or Electronics Engineering, along with approximately five years of relevant experience in the design of transceiver architecture, RF systems and components, and analog and mixed signal circuits, as well as experience in control algorithms for such system and familiarity with wireless standards—with additional education substituting for experience and vice versa.

Prelim. Resp. 25 (citing Larson I Decl. ¶ 48).

The two proposals are materially similar in the education requirement, but differ marginally in professional experience required (three versus five years). *See supra*. While we were persuaded, on the preliminary record, that both Petitioner's and Patent Owner's proposals were consistent with the problems and solutions in the '202 patent and the prior art of record, on balance, we determined that Petitioner's proposal was a better reflection of the level of skill in the prior art, and we therefore adopted it for our Institution Decision. *See* Institution Dec. 12–13.

For this Decision, we adopt the description of the person of ordinary skill articulated by Petitioner and used previously in our Institution Decision. In light of our review of the complete record, we find that this formulation is consistent with the '202 patent, the prior art of record, and is supported by the testimony of Dr. Baker. *See* Baker I Decl. ¶¶ 28–32. Our Decision would not change, however, if we had applied Patent Owner's proposed level of ordinary skill.

*C. Overview of the Primary Prior Art*

1. Rauhala (Ex. 1004)

Rauhala discloses "a method and an arrangement for linearizing a radio receiver" that can be "applied in the reception circuits of mobile stations." Ex. 1004 ¶ 1. Rauhala explains that "[t]he quality of a signal in a radio receiver is degraded by noise and interference . . . indirectly caused by other radio signals. The latter refers to a situation in which a signal on a neighboring channel, which momentarily is considerably stronger than the signal to be received." *Id.* ¶ 2. Rauhala further indicates that "the signal quality can be improved by using more energy in the receiver," but notes that this "shortens the battery life." *Id.* ¶ 3.

Rauhala summarizes the "basic idea of the invention" as monitoring the signal strength on the receive channel and neighboring channels and determining the quality of the detected signal. Ex. 1004 ¶ 6. "[W]hen the signal strength is satisfactory on the receive channel and ordinary on the neighboring channels, the supply currents of the receiver's front-end amplifiers and at least the first mixer are kept relatively low." *Id.* "If the signal strength goes below a certain value on the receive channel or exceeds a certain value on the neighboring channel, said supply currents are increased." *Id.* Rauhala indicates that an "advantage of the invention is that the energy consumption of the receiver can be reduced without degrading the signal quality," which "means longer life for the battery." *Id.* ¶ 7.

Figure 1 of Rauhala, shown below, depicts "a simplified example of a radio receiver without the low-frequency components." Ex. 1004 ¶ 12.

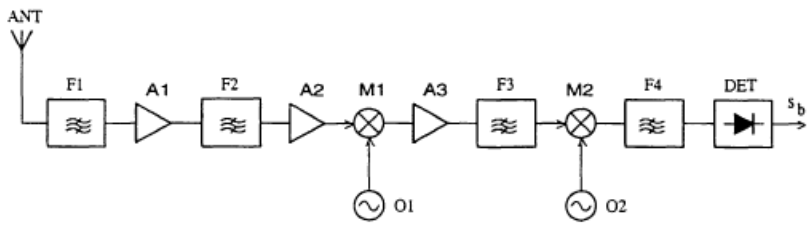


Fig. 1

Figure 1 shows a radio receiver that includes antenna ANT coupled to a series of "linear units" of filters (F1–F4), amplifiers (A1–A3), and mixers (M1, M2), with each mixer connected to an oscillator (O1, O2). *Id.* As shown, the output of filter F4 is coupled to a detector DET, which provides a baseband signal $s_b$. *Id.*

Figure 4 is similar to Figure 1, and illustrates an example of supply current control for the linear units. Ex. 1004 ¶ 17. Figure 4 of Rauhala is depicted below.

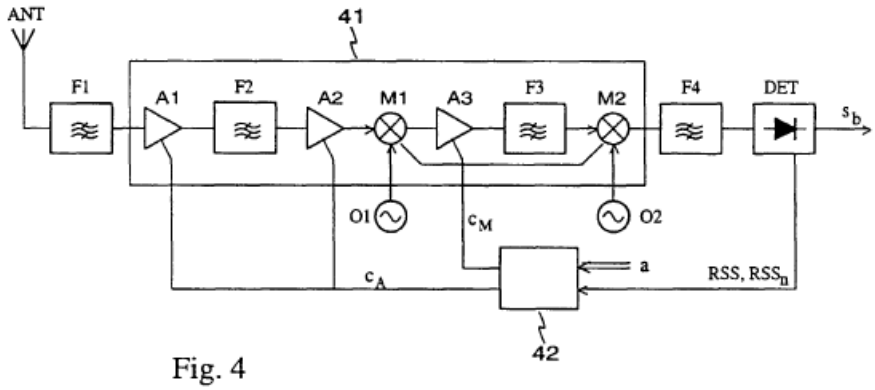


Fig. 4

In addition to the antenna, oscillators, detector DET, and linear units (filters, amplifiers, mixers) shown in Figure 1, Figure 4 includes control unit 42 that "receives from detector DET an indication about either the receive channel signal strength RSS or the strength of any signal on the reception band." *Id.*

As shown, control unit 42 receives two inputs from detector DET—"RSS, $RSS_n$." Ex. 1004, Fig. 4. Rauhala indicates that RSS is the receive

channel strength (as noted above) and that $RSS_n$ is the signal strength of the neighboring channel in which the signal strength is greater. *Id.* ¶ 17. Figure 4 also depicts another input to control unit 42—"signal a"—that is received "from the receiver's tuner control [that] indicates the channel." *Id.* ¶ 17, Fig. 4.

"The control unit 42 provides two one-bit control signals $c_A$ and $c_M$" to various linear units. Ex. 1004 ¶ 17, Fig. 4. Control signal $c_A$ is provided to amplifiers A1 and A2, whereas control signal $c_M$ is provided to mixer M1, amplifier A3, and mixer M2. *Id.* ¶ 17. The control signals are used to control the supply current provided to the respective linear units. *Id.*

*D. Anticipation of Claims 7–11, 13, and 19–21 by Rauhala*

Petitioner asserts that claims 7–11, 13, and 19–21 are unpatentable under 35 U.S.C. § 102(b) as anticipated by Rauhala. Pet. 24–73; Baker I Decl. ¶¶ 84–316. Patent Owner disagrees and contends Rauhala fails to disclose several limitations found in the independent claims. *See* PO Resp. 35–63; Larson II Decl. ¶¶ 64–80.

Upon consideration of Petitioner's explanations and supporting evidence in this record, and Patent Owner's arguments and supporting evidence, we are not persuaded that Petitioner has demonstrated by a preponderance of the evidence that independent claims 7, 11, 13, and 19, and their dependent claims 8–10, 20, and 21 are anticipated by Rauhala.

Our analysis focuses on claim elements 7.3 ("wherein the receiver is configured to receive a wireless signal having a desired signal and an interferer signal "); 7.7 ("determining the strength of the desired signal"), and 7.8 ("determining the strength of the desired signal"). As we discuss *infra*, independent claims 11, 13, and 19 contain recitations that are similar,

if not identical, to disputed limitations 7.3, 7.7, and 7.8. The dispositive issue is whether Rauhala discloses a receiver that is "configured to receive a wireless signal having a desired signal and an interferer signal", "determining the strength of the desired signal", and "determining the strength of the interferer signal", in the way recited in claim 7 and the other independent claims.

*i. Claim 7*

Petitioner asserts that each limitation of claim 7 is disclosed by Rauhala and provides an element-by-element analysis. Pet. 24–41; Baker I Decl. ¶¶ 84–136. In our Institution Decision, we discuss each of those contentions. *See* Institution Dec. 18–20. Here, we focus on the limitations of claim 7 identified *infra* that are case-dispositive.

*a. Limitation 7.3 (wherein the receiver is configured to receive a wireless signal having a desired signal and an interferer signal)*

Petitioner contends that "[a person of ordinary skill] would have understood that the radio receiver described in *Rauhala* is configured to receive a wireless radio signal." Pet. 25. Petitioner continues, "[a person of ordinary skill] would have understood that a signal on the receive channel is a 'desired signal' and a signal on a neighboring channel is an 'interferer signal.'" *Id.* at 26.

Patent Owner responds, based on the plain language of the claim as well as the specification description, that claim 7 requires the desired signal and the interferer signal to be received at the same time. *See*, e.g., PO Resp. 37 ("The '202 Patent teaches that the desired signal and the interferer signal are part of the same received signal input spectrum—in other words, they are received together." (citing Ex. 1001, 5:22–32; 14:2–3 (claim 7))); PO Sur-

reply 5 ("Simply from reading the claim language, the desired signal and the interferer signal are *parts of the same received wireless signal*—in other words, they are received together.").

Petitioner disputes that these limitations impose a "temporal requirement." Pet. Reply 5. We do not agree with Petitioner. We find that the language of the claims supports Patent Owner's argument that the desired signal and the interferer signal are received together. As discussed *infra*, claim limitations 7.7 and 7.8 recite determining a signal strength of the interferer signal and determining a signal strength of the desired signal. These determinations must be performed at the same time; otherwise, the determinations of signal strengths would not be of the same wireless signal. *See* Larson II Decl. ¶ 70; Baker II Decl. ¶¶ 48–49 (explaining that consideration of signal strengths detected at the same time would be "essential").

The specification of the '202 patent further supports this finding: "When a receiver is actively receiving a desired signal, each block in the signal path has at its input the desired signal as well as noise and possibly interfering signals." Ex. 1001, 5:22–24; *see also* Figs. 2A, 2B (showing interferer signals and desired signals together).

Dr. Larson testifies that the '202 patent and related patents "teach and claim a circuit for determining a desired signal strength <u>and</u> a circuit for determining an interferer signal strength, two components of a received spectrum." Larson II Decl. ¶ 70. His testimony continues, "[t]his configuration, not disclosed in *Rauhala*, allows for simultaneous determination and for dynamic adjustments that incorporate information about both signals or their direct comparison." *Id.* (emphasis omitted). Our conclusion is further supported by the testimony of Petitioner's expert Dr.

Baker. *See* Baker II Decl. ¶¶ 48–49, *cited supra*; s*ee also* Baker Dep. 64:10–22, 65:7–17). At his deposition, Dr. Baker was asked: "Do the interferers have to be present at the same time as the desired signal in order to interfere with the desired signal?" He responded, "if the interferers are present, they can interfere at the same time with the desired signal." Baker Dep. 65:7–17.

The Petition did not address the recitation in limitation 7.3 or other evidence indicating that the desired signal and the interferer signal are received at the same time as part of the same wireless signal. *See* Hearing Tr. 17:6–9. Petitioner now argues, however, that Patent Owner "invites the Board" to read a temporal requirement into the claims. Pet. Reply 5–6. We disagree. As discussed above, we find that Patent Owner's "same signal" argument is supported by the claim language itself and by the specification of the '202 patent, as well as by the testimony of Drs. Baker and Larson.

For the reasons given, we find that claim 7 requires the desired signal and the interferer signal to be part of the same wireless signal and received at the same time.

*b. Limitations 7.7("determining the strength of the desired signal") and 7.8 ("determining the strength of the interferer signal")*

For limitation 7.7 ("determining the strength of the desired signal"), Petitioner contends that Rauhala "explains that '[d]etector DET provides information about the signal strength (RSS) on the channel to which the receiver is tuned.'" Pet. 31 (quoting Ex. 1004 ¶ 13); Baker I Decl. ¶¶ 111–114.

For limitation 7.8 ("determining the strength of the interferer signal"), Petitioner contends that Rauhala "states that the 'receiver monitors the signal

strength on the neighboring channels.'" Pet. 33 (quoting Ex. 1004 ¶ 6 (alteration in original omitted); Baker I Decl. ¶¶ 115–116. Petitioner continues, Rauhala "refers to this value as $RSS_n$, which 'stands for the signal strength of the neighboring channel in which the signal strength is greater.'" Pet. 33 (citing Ex. 1004 ¶ 17; Baker I Decl. ¶ 115).

Patent Owner argues that Petitioner fails to show that Rauhala "discloses to a person of ordinary skill in the art elements of every challenged claim requiring both 'determining the strength of the desired signal' *and* 'determining the strength of the interferer signal.'" PO Resp. 37. Patent Owner contends that "[t]he single received signal strength detector as it is described in *Rauhala* cannot be used to perform and thus does not disclose the two claimed determinations." *Id.* at 35–36. Further, Patent Owner asserts that "[t]he claim language requires measurement of two different components of one received signal spectrum." *Id.* at 36. For the reasons that follow, we agree with Patent Owner that Petitioner fails to demonstrate by a preponderance of the evidence that Rauhala discloses or suggests the "determining" limitations 7.7 and 7.8. PO Resp. 37–47; PO Sur-reply 5–11; Larson II Decl. ¶¶ 69–72.

Rauhala states "[d]etector DET provides information about the signal strength (RSS) on the channel *to which the receiver is tuned*." Ex. 1004 ¶ 13 (emphasis added). Rauhala further states "control unit 42 receives from detector DET in Figure 4 [reproduced *supra*] an indication about *either* the receive channel signal strength RSS *or* the strength of any signal on the reception band." *Id.* ¶ 17 (emphasis added). Petitioner does not demonstrate how Rauhala's detector DET is arranged or combined as in claim 7 which requires the desired signal and the interferer signal to be parts of the same received wireless signal, and as such, to be received together at the same

time. *See* discussion *supra*. As noted, Rauhala states "[d]etector DET provides information about the signal strength (RSS) on the channel *to which the receiver is tuned.*" Ex. 1004 ¶ 13 (emphasis added).

Rauhala describes Figure 4 as including control unit 42 that "receives from detector DET an indication about *either* the receive channel signal strength RSS *or* the strength of any signal on the reception band." Ex. 1004 ¶ 17 (emphasis added). This description does not disclose receiving the desired signal and the neighboring signal at the same time. In fact, it discloses that the receiver is tuned to one channel (the desired receive channel) or another (a neighboring channel).

According to Patent Owner, Rauhala's detector DET makes separate determinations of the strength of the receive channel signal and the strength of the neighboring channel signal. PO Resp. 38–41. This means the receiver's determination of signal strength after being tuned to the neighboring channel is of "a different signal spectrum" and not as arranged or combined in claim 7. *Id.* at 41. For the reasons given, we agree with Patent Owner's description of Rauhala and find, therefore, that Rauhala's detector measures the strength of the desired signal RSS *or* the strength of an interfering neighbor signal $RSS_n$ from a received signal, *but not both at the same time*. *See* Ex. 1004 ¶ 17.

Petitioner fails to prove by a preponderance of the evidence how or when Rauhala's detector produces the two signals, RSS and $RSS_n$, from the same received wireless signal at the same time. *See* discussion *supra* of limitation 7.3 (reciting "wherein the receiver is configured to receive a wireless signal having a desired signal and an interferer signal"). Petitioner contends that "Rauhala describes supply current control signals that vary based on simultaneous determinations of RSS and $RSS_n$." Pet. Reply 8

(emphasis omitted). For support, Petitioner quotes Rauhala's reference to a receiver that "monitors the signal strength on the control channel and neighboring channels." Pet. Reply 8 (quoting Ex. 1004 ¶ 6). Petitioner also cites Rauhala's reference to control unit 42 providing one control signal "when signal RSS is greater than [a threshold value] S4 and signal $RSS_n$ is at the *same time* smaller than [another threshold value] Sn" and another similar example. *Id.* at 8–9 (quoting Ex. 1004 ¶ 17). From these descriptions, Petitioner contends "[a person of ordinary skill] therefore would have understood that detector DET must simultaneously determine a desired signal strength (RSS) and [neighboring channel signal strength] ($RSS_n$)." Pet. Reply 8 (citing Ex. Baker II Decl. ¶ 48).

We disagree with Petitioner's argument. These references in Rauhala cited by Petitioner do not disclose that signal strengths RSS and $RSS_n$ are determined "at the same time." Rauhala's reference to "at the same time" refers to control unit 42 and its use of signals RSS and $RSS_n$ to provide control signals $c_A$, $c_M$, based on the strengths of the signals from the channels receiving the desired and neighboring channels. Pet. Reply 8. That description does not indicate that RSS and $RSS_n$ result from measuring the same signal at the same time. Such a result would be inconsistent with the disclosure of paragraph 17 of Rauhala that "control unit 42 receives from detector DET an indication about *either* the receive channel signal strength RSS *or* the strength of any signal on the reception band" (emphasis added).[6]

[6] Dr. Baker also cites Rauhala's Figure 4, in which RSS and $RSS_n$ appear together on the output line from the detector. Baker II Decl. ¶¶ 46–47. Hearing Tr. 14:6–24. But at the oral argument, Petitioner's counsel acknowledged that in Figure 4, "[t]he same line, by itself doesn't necessarily tell you about the timing." Hearing Tr. 14:6–15:2.

Nor do the references to monitoring signal strength or adjusting supply currents in Rauhala's paragraph 6 describe measuring RSS and $RSS_n$ at the same time, as Petitioner argues, when paragraph 17 of Rauhala is clear that the detector provides an indication of the strength of either signal, but not both. *See* Pet. Reply 8. At best, Petitioner's arguments suggest an inconsistency in Rauhala's disclosure between paragraphs 6 and 17. We disagree that Rauhala lacks consistency in describing the operation of the detector, but if there were inconsistency in Rauhala, it would be fatal to Petitioner's anticipation case. "It has long been understood that ambiguous references do not, as a matter of law, anticipate a claim." *Wasica Fin. GmbH v. Cont'l Auto. Sys., Inc.*, 853 F.3d 1272, 1284 (Fed. Cir. 2017) (citing cases).

Petitioner contends further that "[a person of ordinary skill] would have also recognized that because signal conditions could change in an instant, adjusting the current supplied to the linear units [in Rauhala] based on determinations made at different times would result in a faulty device that does not actually function as intended." *Id.* at 8–9 (citing Baker II Decl. ¶¶ 49–50). Petitioner argues that "such a system would be impractical—so impractical, in fact, that Rauhala does not and would not describe such a system." *Id.* at 9 (emphasis omitted). We do not agree with this argument. We agree, instead, with Patent Owner that Rauhala discloses "a different approach [from the '202 patent] involving measurement of different wireless signals." PO Sur-reply 6. That is, we find that Rauhala discloses a detector "that can detect a threshold for a received signal strength RSS on one channel or another," but not both channels at the same time. *Id.* at 8–9 (citing Ex. 1004 ¶¶ 14, 17; Larson II Decl. ¶¶ 69–72).

Responding to Petitioner's argument that a system that determines signal strength at different times is "impractical," and therefore Patent Owner's description of Rauhala is incorrect, Patent Owner asserts, "[t]here is no requirement that Rauhala disclose a good solution." PO Sur-reply 9–10 (emphasis omitted). We agree. We are not persuaded by Petitioner's argument that because Rauhala's disclosure is "impractical" and "would result in a faulty device," a person of ordinary skill would have discounted a clear teaching that Rauhala does not determine desired signal strength and interferer signal strength from the same signal. *See* Ex. 1004 ¶ 17; Pet. Reply 8–9; PO Sur-reply 9–10; Larson II Decl. ¶¶ 69–72.

Rauhala's disclosure of these limitations was explored with Petitioner's counsel at oral argument and with Dr. Baker at his deposition. At the oral argument, the panel asked Petitioner's counsel to explain the "unambiguous" statement in paragraph 17 of Rauhala that the detector provides either the signal strength of the desired channel or the neighboring channel. Hearing Tr. 16:19–21. Counsel responded, "Petitioner['s] position is that the most natural way to read that would be that it's simply *an imprecise description* at that particular paragraph." *Id.* at 16:22–24 (emphasis added). We find Petitioner's argument characterizing this disclosure as "imprecise" unavailing. We do not see a lack of precision or ambiguity in Rauhala's disclosure.

When asked at his deposition to explain the use of "or" in the sentence from Rauhala's paragraph 17 describing the action of the detector in receiving the desired signal RSS or the interfering signal RSSn, Dr. Baker asserted that "[detectors] can be designed to determine RSS or RSSN." Baker Dep. 85:5–12. We find Dr. Baker's testimony that "it's reasonable that if you can design . . . the detector to detect one or the other, you can also

design it to detect both" to be without any factual support. *See* Baker Dep. 85:13–16. He admits that "Rauhala doesn't teach the details of what's in the detector." *Id.* at 91:6–7. He points to no textbook or other independent evidence that would have led a person of ordinary skill to design such a detector. Our Trial Practice Guide cautions against crediting such unsupported testimony:

> The Board has broad discretion to assign weight to be accorded expert testimony. *Yorkey v. Diab*, 601 F.3d 1279, 1284 (Fed. Cir. 2010). However, the testimony must be based on sufficient facts and data. Fed. R. Evid. 702(b). "Expert testimony that does not disclose the underlying facts or data on which the opinion is based is entitled to little or no weight." 37 C.F.R. § 42.65(a).

Patent Trial and Appeal Board Consolidated Trial Practice Guide 35 (Nov. 2019).[7] We therefore give Dr, Baker's unsupported testimony on this issue little weight.

We have considered the other arguments presented by the Petitioner and find them unavailing. For example, Petitioner argues that "[n]one of the 'determining' elements require performance by a particular component or structure." Pet. Reply 5. This general statement is not pertinent here. The question before us is not which components in Rauhala perform the "determining" steps, but whether Petitioner has demonstrated sufficiently that the steps recited in the claims are performed at all by any component in Rauhala, including the detector.

Petitioner also disputes Patent Owner's contention that Rauhala's detector DET requires "'re-tuning' after determining the desired signal strength (RSS) but before determining the [neighboring channel] signal

[7] Available at https://www.uspto.gov/TrialPracticeGuideConsolidated.

strength ($RSS_n$)." Pet. Reply 8 (citing PO Resp. 39–40; Larson II Decl. ¶¶ 70, 72; Baker II Decl. ¶¶ 45–51). Patent Owner, in contrast, contends that in Rauhala, "the detector must be re-tuned to another channel in order to provide an indication from it." PO Resp. 39. Because we find Petitioner's analysis to be deficient in explaining how Rauhala teaches or suggests making the two determinations of signal strength at the same time, as claimed, we do not need to decide whether Rahaula discloses "re-tuning" of the receiver to another channel as Patent Owner argues.

Nor do we find it necessary for this Decision to address Patent Owner's argument based on Dr. Larson's assumption that the detector in Rauhala is a "diode-detector" operating as an envelope detector. *See* PO Resp. 38–39; Larson II Decl. ¶ 60 ("I would assume that the detector is a simple type of envelope detector known as a 'diode detector.'"). The issue before us is not the exact structure of Rauhala's detector, but Rauhala's description of its operation. As Dr. Larson recognizes, "Rauhala does not give any details about the internal functioning of the detector." *Id.* (emphasis omitted).[8]

In summary, we find that Rauhala discloses a radio receiver in which the detector provides *either* the signal strength of the desired channel *or* the neighboring channel from a wireless signal having a desired signal and an interferer signal, but not both at once. Ex. 1004 ¶ 17. We find insufficient proof by Petitioner that Rauhala's disclosure meets the requirements of the

[8] The representation of the detector in Rauhala as a box containing a diode symbol does not suggest any particular configuration of the detector, any more that the similar representations of the oscillators, mixers, and amplifiers in those diagrams suggest particular configurations for those components. *See* Ex. 1004, Figs. 1–5.

claims for "determining the strength of the desired signal" *and* "determining the strength of the interferer signal" from "a wireless signal having a desired signal and an interferer signal." *See* claim elements 7.3, 7.7, 7.8; Ex. 1004 ¶ 17.

*ii. Claims 11, 13, and 19*

As noted, each of these independent claims recites the steps of "receiving [a/the] wireless signal having a desired signal and an interferer signal by the receiver," "determining a strength of the desired signal," and "determining a strength of the interferer signal."[9] Consequently, our analysis of the corresponding limitations of claim 7 applies also to these claims. For the reasons given for claim 7, we find that Rauhala does not anticipate claims 11, 13, and 19.

*iii. Dependent Claims 8–10, 20, and 21*

Claims 8–10 depend from claim 7. Claims 20 and 21 depend from claim 19. These dependent claims incorporate the limitations of the claims from which they depend, including those addressed in connection with our analysis of claims 7 and 19, *supra*. For the reasons given for claims 7 and 19, we find that Rauhala does not anticipate these claims.

[9] Of these three independent claims, only claim 19 recites "receiving *the* wireless signal having the desired signal and the interferer signal by the receiver." Ex. 1001, 17:26–27. The others recite "receiving *a* wireless signal having the desired signal and the interferer signal by the receiver." *Id.* at 14:39–40; 15:16–17 (emphasis added). We do not find this minor difference in wording affects our analysis.

*iv. Summary and Conclusions*

For the reasons given, we determine that Petitioner has not demonstrated by a preponderance of the evidence that claims 7–11, 13, and 19–21 of the '202 patent anticipated by Rauhala.

*E. Obviousness of Claims 7–11, 13, and 19–21 over Rauhala and Saito*

Petitioner asserts that independent claims 7, 11, 13, and 19, and their dependent claims 8–10, 20, and 21 are unpatentable under 35 U.S.C. § 103(a) as obvious over Rauhala and Saito. Pet. 73–77. Petitioner relies on Saito to teach "dynamically adjusting" and related terms, but only if Patent Owner argues these terms require "adjustment without reliance upon a signal strength threshold." *Id.* at 73–74. Petitioner contends that "*Saito* discloses automatic gain control circuitry for use in receivers of mobile devices." *Id.* at 74. Petitioner argues that "[a person of ordinary skill] would have been motivated to modify the threshold-based current controls of *Rauhala* to continuously adjust the supply currents using a continuous feedback system, as described by *Saito*." *Id.* at 76 (citing Baker I Decl. ¶ 330).

Patent Owner does not separately address Saito, nor does Petitioner rely on Saito to teach the limitations of the challenged claims disputed by Patent Owner and discussed *supra*. *See* Pet. 73–77; PO Resp. 25 ("[N]othing is added in Ground 2—or from the alleged combination reference *Saito*—to the deficient showing concerning the independent claims in Ground 1.").

Therefore, based on the evidence in the record and for the same reasons provided above in Section III.D, we find that Petitioner has failed to

demonstrate by a preponderance of the evidence that claims 7–11, 13, and 19–21 would have been obvious over Rauhala and Saito.

### *F. Petitioner's Motion to Exclude*

Petitioner moves to exclude Exhibits 2002, 2003, 2004, 2017, 2018, and 2020. Paper 25. We have not relied on any of these exhibits in our analysis. Accordingly, we deny the motion as moot.

## IV. CONCLUSION

For the foregoing reasons, we determine that Petitioner has not demonstrated by a preponderance of the evidence that the challenged claims of the '202 patent are unpatentable. In summary:

| Claim(s) | 35 U.S.C. § | Reference(s)/Basis | Claim(s) Shown Unpatentable | Claim(s) Not Shown Unpatentable |
|---|---|---|---|---|
| 7–11, 13, 19–21 | 102(b) | Rauhala | | 7–11, 13, 19–21 |
| 7–11, 13, 19–21 | 103(a) | Rauhala, Saito | | 7–11, 13, 19–21 |
| **Overall Outcome** | | | | 7–11, 13, 19–21 |

## V. ORDER

Upon consideration of the record before us, for the foregoing reasons, it is:

ORDERED that Petitioner has failed to demonstrate by a preponderance of the evidence that claims 7–11, 13, and 19–21 of the '202 patent are unpatentable; and

FURTHER ORDERED that because this is a Final Written Decision, parties to the proceeding seeking judicial review of the decision must comply with the notice and service requirements of 37 C.F.R. § 90.2.

FOR PETITIONER:

Dinesh Melwani
William Uhr
BOOKOFF McANDREWS, PLLC
dmelwani@bomcip.com
wuhr@bomcip.com

PATENT OWNER:

Aaron Hand
BUNSOW DE MORY LLP
ahand@bdiplaw.com