UNITED STATES PATENT AND TRADEMARK OFFICE

BEFORE THE PATENT TRIAL AND APPEAL BOARD

APPLE INC.,
Petitioner,

v.

THETA IP, LLC,
Patent Owner.

Case IPR2024-00819
U.S. Patent No. 11,564,164

PATENT OWNER THETA IP LLC'S SUR-REPLY

TABLE OF CONTENTS

Page

I. Introduction and Summary 1

II. Petitioner failed to prove that the challenged claims are taught or suggested by the *Behbahani* papers 9

A. Apple's Petition and Reply failed to show that the *Behbahani* papers disclose or teach adjusting "a bias" or "an impedance" of a circuit that is "in the signal path" according to the challenged claims 9

1. *Behbahani*'s static filter swap is not the claimed approach of dynamically adjusting "an impedance" or "a bias" that is "in the signal path" 9

2. Behbahani's entire bandpass is not a single "circuit," or "an impedance" with "a bias current" 11

3. No impedance or bias in the signal path is dynamically changed per the claims. 14

4. Apple's Reply mischaracterizes rather than rebuts Theta's positions. 15

5. The '164 Patent claims a different approach than the *Behbahani* papers disclose. 19

B. Apple's Petition and Reply failed to show that the *Behbahani* papers disclose or render obvious determining the signal strength of the interferer signal, or comparing signal strengths, according to the challenged claims 21

III. This trial should not have been instituted and should be dismissed 24

IV. Conclusion 27

TABLE OF AUTHORITIES

Page(s)

Cases

Advanced Bionics, LLC v. MedEl Elektromedizinische Geräte GMBH,
IPR2019-01469, Paper 6 (P.T.A.B. Feb. 13, 2020) 20

DSS Technology Management, Inc. v. Apple Inc.,
885 F.3d 1367 (Fed. Cir. 2018) 23

Ecto World, LLC v. RAI Strategic Holdings, Inc.,
IPR2024-01280, Paper 13 (P.T.A.B. May 19, 2025) 8, 25, 26

Gen. Elec. Co. v. Joiner,
522 U.S. 136 (1997) 17

Hulu LLV v. Piranha Media Distribution, LLC,
IPR2024-01252, Paper 17 (P.T.A.B. April 17, 2025) 26

In re Am. Acad. of Sci. Tech Ctr.,
367 F.3d 1359 (Fed. Cir. 2004) 17

Mylan Labs. Ltd. v. Janssen Pharmaceutica, N.V.,
989 F.3d 1375 (Fed. Cir. 2021) 26

Sling TV, L.L.C. v. Realtime Adaptive Streaming LLC,
840 F. App'x 598 (Fed. Cir. 2021) 26

Other Authorities

Memorandum, Enforcement and Non-Waiver of 37 C.F.R. § 42.104(B)(4) and Permissible Uses of General Knowledge in Inter Partes Reviews, July 31, 2025 22

Regulations

37 C.F.R. § 42.62 17

37 C.F.R. § 42.65 17

Patent Owner's Exhibit List	
EX2001	Declaration of Corey Johanningmeier in Support of Motion for *Pro Hac Vice* Admission
EX2002	"Yannis Tsividis, Path-Breaking Researcher and Educator," IEEE Solid State Circuits Magazine, Fall 2014
EX2003	Y. Tsividis *et al.*, "Internally Varying Analog Circuits Minimize Power Dissipation," IEEE Circuits & Devices Magazine, Jan. 2003
EX2004	Y. Tsividis, "Signal-to-Noise Ratio, Dynamic Range, and Power Dissipation," IEEE Solid State Circuits Magazine, Fall 2018
EX2005	Declaration of Professor Lawrence Larson, Ph.D. under 37 C.F.R. § 1.68 in support of Patent Owner's Preliminary Response in IPR2024-00816, -00817, -00818, -00819, and -00820.
EX2006	*Curriculum Vitae* of Professor Larson
EX2007	IPR2023-00694, Paper 10, Decision Denying Institution (P.T.A.B. Oct. 23, 2023)
EX2008	IPR2023-00694, Paper 14, Decision Denying Rehearing (P.T.A.B. Feb. 7, 2024)
EX2009	U.S. Patent No. 5,001,776 (*Clark*)
EX2010	Excerpts of Invalidity Contentions, *Theta IP, LLC v. Samsung Electronics Co., Ltd. et al*., No. 2-16-cv-00527 (E.D. Tex.)
EX2011	Excerpts of Invalidity Contentions, *Theta IP, LLC v. Lenovo (United States) Inc., et al*., 1-22-cv-03441 (N.D. Ill.)
EX2012	Excerpts of Invalidity Contentions, *Theta IP, LLC v. Apple Inc*, No. 6:23-cv-00314-ADA (W.D. Tex.)
EX2013	Second Amended Scheduling Order, *Theta IP, LLC v. Apple Inc*, No. 6:23-cv-00314-ADA (W.D. Tex. Aug. 6, 2024), ECF No. 91
EX2014	Claim Construction Order, *Theta IP, LLC v. Samsung Electronics Co., Ltd. et al*., 6:20-cv-00160-ADA (W.D. Tex. Jan. 7, 2021), ECF No. 57

Patent Owner's Exhibit List	
EX2015	March 25, 2024 Email from Court listing Preliminary Constructions, *Theta IP, LLC v. Apple Inc*, No. 6:23-cv-00314-ADA (W.D. Tex.)
EX2016	March 25, 2024 Email from Apple to Court re: *Markman*, *Theta IP, LLC v. Apple Inc*, No. 6:23-cv-00314-ADA (W.D. Tex.)
EX2017	Transcript of *Markman* hearing, *Theta IP, LLC v. Apple Inc*, No. 6:23-cv-00314-ADA (W.D. Tex. Mar. 26, 2024)
EX2018	Minute Order setting *Markman* hearing, *Theta IP, LLC v. Lenovo (United States) Inc., et al*., 1-22-cv-03441 (N.D. Ill. July 2, 2024), ECF No. 104
EX2019	Reserved
EX2020	Declaration of Professor Lawrence Larson, Ph.D. in support of Patent Owner's Preliminary Responses in IPR2024-00816, -00817, -00818, -00819, and -00820
EX2021	Deposition Transcript of Dr. Asad Abidi – March 11, 2025
EX2022	IPR2023-00697, Paper 32, Final Written Decision Determining No Challenged Claims Unpatentable (P.T.A.B. Oct. 16, 2024)
EX2023	IPR2023-00698, Paper 33, Final Written Decision Determining No Challenged Claims Unpatentable (P.T.A.B. Oct. 16, 2024)
EX2024	IPR2023-00694, Paper 11, Rehearing Request (P.T.A.B. Nov. 22, 2024)
EX2025 **(new)**	Claim Construction Order and Memorandum, *Theta IP, LLC v. Apple Inc*, No. 6:23-cv-00314-ADA, Dkt. 118 (W.D. Tex. July 2, 2025).
EX2026 **(new)**	Apple's Initial Narrowing of Prior Art, *Theta IP, LLC v. Apple Inc*, No. 6:23-cv-00314-ADA (W.D. Tex. May 7, 2025)
EX2027 **(new)**	Order Denying Apple's Motion to Stay, *Theta IP, LLC v. Apple Inc*, No. 6:23-cv-00314-ADA, Dkt. 104 (W.D. Tex. February 5, 2025)

Patent Owner's Exhibit List	
EX2028 **(new)**	Order granting Defendants' Motion to Stay, *Theta IP, LLC v. Lenovo (United States) Inc., et al*., 1-22-cv-03441 (N.D. Ill. April 23, 2025), ECF No. 127

I. Introduction and Summary

Each challenged claim of the '164 Patent requires a dynamic change to "***a*** bias current" or "***a*** bias current" and "***an*** impedance" of a circuit that is "***in*** the receiver signal path."[1] EX1001, 13:24-26 (claim 1: "causes ***a*** bias current to be dynamically adjusted ***in*** one or more of the circuits ***in*** the receiver signal path"), 13:59-63 (claim 5), 14:32-35 (claim 10), 14:63-65 (claim 15), 16:20-22 (claim 20). Per the plain and undisputed language of the claims, something that is ***in the signal path*** must dynamically ***change***.

This key aspect of the claims is not met by *Behbahani*'s rerouting the signal path itself—to swap one static, unchanged filter for another static, unchanged filter. Apple does not and cannot dispute that, in *Behbahani*'s approach, neither filter stays in the signal path; and neither filter changes. Response, 3, 5-11, 35, 42-44, 52-53, 58-60; EX2020, ¶¶57-63, 71, 74-83.

Professor Larson testified plainly and without rebuttal that a POSITA would understand the challenged claims (and this distinction) this way. EX2020, ¶¶58, 62, 70-71, 74-77, 85. He explained the distinction simply—akin to the difference between "replacing a 25W light bulb with a 100W light bulb," or instead "installing a single dimmable light bulb with a dimmer control." *Id.*, ¶78. The impedance of any bulb is only changed in the latter, dimmer-control approach.

[1] All ***bold italic*** emphasis herein added.

In *Behbahani*, no bias current or impedance of any filter circuit block that remains in the signal path is adjusted—as the claims require by their plain language. *Id.*, ¶¶79-85; EX1001, Claim 20 ("dynamically adjust ***a*** bias of one or more of the plurality of circuits ***in the signal path***"); EX1004, 1206 (instead "substituting a scaled version of a nominal circuit"). The swapped low-pass filters do not change. The overall bandpass is built of *multiple* circuits and impedances, none of which undergo changed impedance or bias. Response, 58-60; EX2021, 67:5-69:18 ("…We haven't changed the transconductance of the low-pass filter; right? A. Yes. Okay."); EX2020, ¶¶81-83 ("What the band-pass filter of the *Behbahani* papers does not have is any individual impedance 'in the signal path' that changes dynamically during operation"):

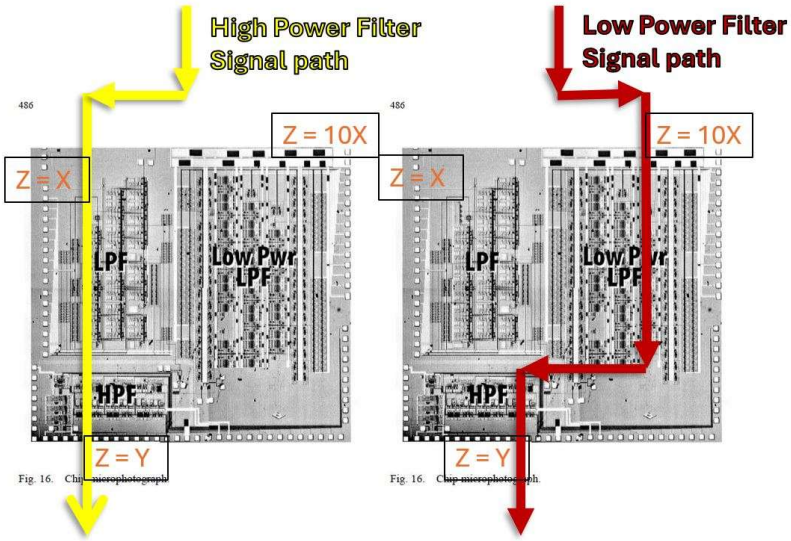

Apple's Reply avoids this distinction—and never confronts the import of the "in the signal path" claim language. Instead, Apple mischaracterizes Theta's

argument to fight strawmen, and argues about materials outside of its Ground—materials that Apple itself first tried to rely on. These mis-directions are addressed below.

More fundamentally, as explained in Response and herein, *Behbahani*'s entire bandpass block, containing multiple filters, is not a single circuit block, nor does it employ a single "an impedance" or "a bias current" in the ordinary understanding of the challenged claims. *See* Response, 58-60, 63-64; EX2020, ¶¶46-48, 71, 74, 76-77, 79-80, 82-83. Apple seemingly agreed in its Petition, instead identifying the underlying high- and low-power low-pass filters inside that bandpass box as the relevant "component" or "circuit." Petition, 57 ("switching from *Behbahani*'s high-power filter to its low-power filter changes (increases) an impedance and changes (reduces) [] the bias current of a component (i.e., the filter) in the signal path"); EX1003, ¶149.

First via attorney argument in Preliminary Reply, then via improper late expert declaration in Reply, Apple changed theories; now asserting that the entire bandpass is the claimed "component" or circuit. Prelim. Reply, 1; EX1042, ¶¶4-6 ("Variable Bandpass Filter Block ***Is*** A 'Component'…"). This late change in theory should be struck or disregarded, for the reasons given in Theta's Motion to Strike (Paper 23). This late assertion by Professor Abidi is also contrary to common

sense and unsupported by intrinsic evidence—and should be disregarded for lack of merit.

And even if Professor Abidi's cursory statements and Apple's new theory were considered, Professor Larson disagrees—and gave a well-supported opinion, citing evidence, as to why a POSITA ***would not*** understand the entire bandpass box to be a single "circuit," or to reflect variation in "an impedance" or "a bias" in the claims. EX2020, ¶¶46-48, 71, 74-83. Apple has the burden of proof and cannot rebut Professor Larson—or invalidate Theta's long-standing foundational patents—with a conclusory, "nuh-uh" declaration from a prior art author serving as Apple's retained expert. Professor Abidi's Reply Declaration fails to support Apple's bare assertions about the claim language. *See* EX1042, ¶4.

Apple was required to, but failed to discuss the interpretation and application of the relevant claim terms in context. Apple failed to discuss how a bandpass containing three separate filter blocks could be a single circuit in which "a bias" or "an impedance" in the signal path is varied as claimed. It cannot. Theta and Professor Larson explained, as also detailed herein, how the bandpass box meets none of these terms in the claims' full context. EX2020, ¶¶81-86; Response, 53 ("No bias current or impedance—of either filter—changes or is adjusted by that swap.").

Apple's repeated refrain on reply—that Theta must somehow "exclude" Apple's broad re-interpretation from the claim scope—is both an incorrect re-allocation of the burden of proof, and something that Theta did anyway. The necessary dispositive distinctions were built into the claims beginning over two decades ago, when Theta filed the parent of the '164 Patent, and disclosed the *Behbahani* papers and 2003 Tsividis article to the Examiner for review. EX1001, 3; EX1002, 12-13 (disclosing *Behbahani*, *Tan*, and EX1011). The claims require dynamic changes to "a bias" or "an impedance" of at least one circuit that is, and remains, "in the signal path." EX1001; Response, 49-51.

In Reply—ignoring the claim language and intrinsic evidence identified by Theta and Professor Larson—Apple cites to a different patent (the '251 Patent) from Professor Tsividis's separate work at Columbia University. Reply, 21 (*citing* EX1044). But the '251 Patent demonstrates the very distinction core to the dispute here. It shows how Professor Tsividis elsewhere taught and claimed switching between entire filter components by ***changing the signal path***. *See* EX1044 at 9:59-62 ("control logic 316 detects that it is time to ***change the operating signal pathway*** from the upper filter 308 to the lower filter 310"), Figs. 3, 2c (different "Blocks Connected to Signal Path"), claim 1 (filter banks selectively "connected" to output to receive signal).

This re-routing approach taught in the ’251 Patent, also used in *Behbahani*, is self-evidently different from the ’164 Patent’s approach—of ***changing the parameters of a circuit already in the signal path***. *See, e.g.*, EX1001, 2:19-23 (“dynamically changing an impedance of a component in the signal path”); 2:30-33 (“dynamically changing a bias current in the signal path”); Claim 20 (“dynamically adjust ***a*** bias of one or more of the plurality of circuits in the signal path”).

The ’164 Patent discloses and claims a signal path with controlled, dynamically variable elements in it—not a system that switches between different signal paths to traverse different static elements. *See also* EX1001, 11:60-62 (“control the gain, biasing, and impedance levels ***of the circuits in the receiver signal path***”), Fig. 14, Fig. 8A, 8:45-47 (“one or more bias currents in the function block are under control of one or more signals on bias control lines 826”); EX2020, ¶¶44-48; Response, 49-54, 62.

There is a plainly understood difference between controlling to adjust a signal path element in operation as claimed, and re-routing the signal path to swap a different static element.

EX1001, Fig. 8A

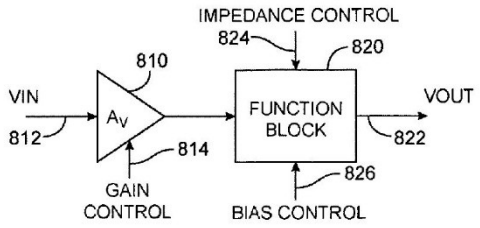

FIG. 8A

Behbahani, Fig. 4 (excerpts annotated)

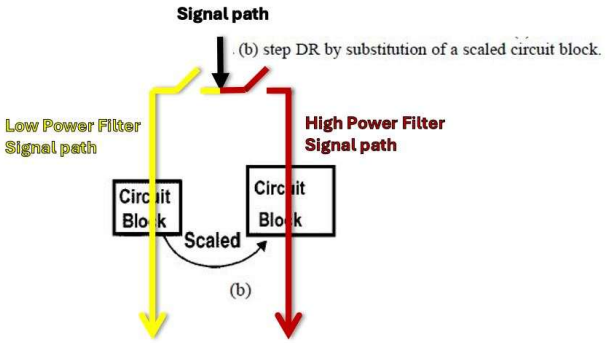

The challenged claims' language reflects this distinction, by requiring a change to "a" bias, or "an" impedance "in the signal path." Apple, and the Board's institution decision, instead discussed "the" overall bias or "the" impedance experienced by the signal when its path changes. But Theta's Response demonstrated this to be a different concept on the other side of the distinction above. *See* Response, 7-8, 42-43, 48, 53-54, 59. Apple failed to address this core distinction in reply.

The *Behbahani* papers fail to disclose or render obvious dynamically changing something "in the receiver signal path." Apple's Petition fails for at least two other reasons as well.

Apple's Reply also fails to address the Petition's deficiencies concerning the "circuit for determining a signal strength" elements. *See* Response, 65-69. Apple admits that the *Behbahani* papers do not discuss any signal strength measurement

circuit. Apple cannot cure its failure to discuss or support the alleged obviousness of these elements by adding a Reply Declaration—wherein a prior art author acting as paid expert admits a lack of disclosure, but attempts to gap-fill with a conclusory assertion that a POSITA would have understood what was intended but left out. *See* EX1044, ¶13 ("It was our intent, which a POSITA would have understood, to include the described functionality"). And on top of this deficiency concerning "determining, e.g., an "interferer signal strength," Apple presented *no evidence* of the specific required comparison of determined signal strengths, even in reply. Apple's failure of proof on these elements is an independent reason to uphold all challenged claims.

Finally, as explained in Preliminary Response and then recently clarified by the Acting Director, this Petition should not have been instituted, and its maintenance is not consistent with the Board's current guidance concerning exercise of its discretion. This is an admitted follow-on challenge, to long-settled (indeed now expired) foundational patents—using art that was put before the Examiner for consideration decades ago by Professor Tsividis. Response, 3-4, 12, 14-19. Apple made no showing of past material error by the Office—as required under *Advanced Bionics*. Paper 8, 55-61. Subsequently, the Director clarified that such a showing of material error was required. *See, e.g.*, *Ecto World, LLC v. RAI Strategic Holdings, Inc.*, IPR2024-01280, Paper 13 at 5 (P.T.A.B. May 19, 2025).

De-institution and dismissal of these proceedings would serve justice and fairness, Theta's settled expectations in long-standing patent rights, and Office policies and efficiency.

For all these reasons, as explained more fully below, Apple failed to meet its burden. The Board should uphold the challenged claims.

II. Petitioner failed to prove that the challenged claims are taught or suggested by the *Behbahani* papers

A. Apple's Petition and Reply failed to show that the *Behbahani* papers disclose or teach adjusting "a bias" or "an impedance" of a circuit that is "in the signal path" according to the challenged claims

Each of the challenged claims of the '164 Patent can be and must be upheld based on a straightforward distinction—reflected directly in the claim language—between e.g., "dynamically changing an impedance of a component in the signal path," or instead changing the signal path to swap one static circuit block for another. Response, 1-11, 45-64; EX2020, ¶¶40-48, 54-85. This distinction, summarized in Section I above, is detailed at length and with intrinsic and extrinsic evidentiary support in Theta's Response and supporting expert testimony. *Id.*

1. *Behbahani*'s static filter swap is not the claimed approach of dynamically adjusting "an impedance" or "a bias" that is "in the signal path"

As discussed in Response, and not disputed by Apple in its Reply, *Behbahani* changes the signal path to route the signal through a different, static filter "circuit block." EX2020, ¶¶57-63 (annotated figure below), 75, 82; EX2021 (Abidi Dep.),

67:5-69:18, 70:9-23, 76:16-77:24, 97:5-8; Reply, 17 ("switching between two alternative filter paths").

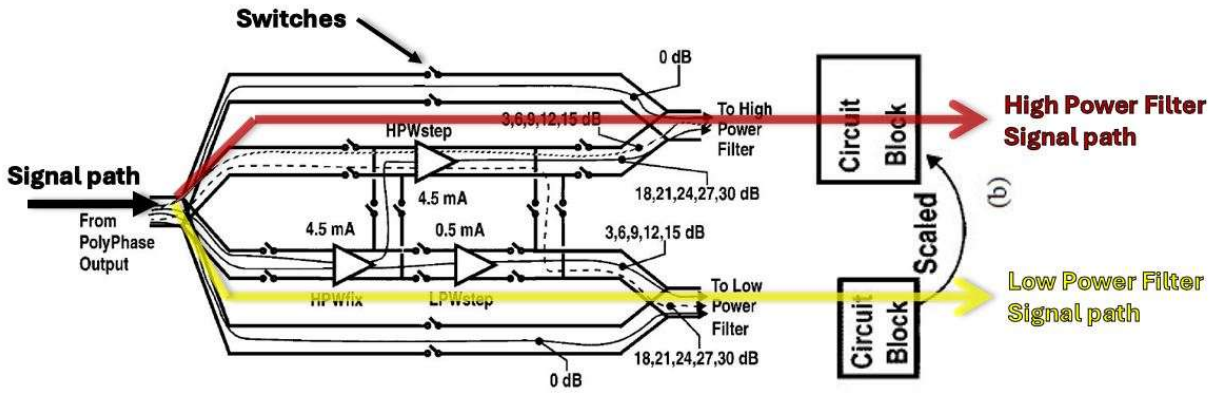

Apple's Reply also does not dispute that *Behbahani*'s two alternate filter "circuit blocks" each undergo no change in their circuit components or parameters via the switch. EX2020, ¶¶62, 71, 76, 79-80; EX2021, 67:5-69:18. *Behbahani*'s solution simply does not match the claim language—even in Reply Apple makes no attempt to apply the actual claim language. Apple failed to identify "an impedance" or "a bias" that is "in the signal path" and is dynamically ***adjusted*** during operation as required.[2]

Instead of identifying "a bias current" or "an impedance" of one circuit "in

[2] The Texas district court recently issued its claim construction Order, confirming the ordinary understanding of terms such as "signal path" and "dynamically" changing. EX2025, 14, 47 (changing "during operation based, at least in part, on information gained during operation").

the signal path" that is dynamically adjusted, Apple's Petition focused on the alleged overall bias or the impedance "experienced by" the signal as *Behbahani*'s filter swap changed the signal path. *See, e.g.*, EX1003, ¶154 (stating that "***the*** [overall] DC bias" or "***the*** [overall] signal path impedance" changes); EX2021, 70:13-72:7 ("***the*** impedance ***experienced by*** the signal"). Theta's Response showed how the overall bias or impedance experienced by the signal can change without any singular "a bias current" or "an impedance" in the signal path changing. *See, e.g.*, Response, 5-8, 43 ("The claims do not require 'the impedance experienced by the signal' to change, but rather 'a bias current' or 'an impedance' of a circuit to change while 'in the receiver signal path.'").

2. Behbahani's entire bandpass is not a single "circuit," or "an impedance" with "a bias current"

Apple's Reply no longer talks about overall bias or "the" impedance "experienced" by the signal. Instead, Apple improperly changed theories (see Paper 23). Now, Apple claims that what it calls "*Behbahani*'s Variable Bandpass Filter Block" is the claimed "component" or "circuit" allegedly adjusted. Reply, 6 (*citing* Petition, 24-29, 47–62). And Apple wrongly claims that this was always its argument. *Id.*

But Apple's Petition never identified the entire bandpass as the claimed "circuit" or "component" varied in the claims—perhaps because the bandpass is

indisputably made up of multiple circuit blocks, with many bias currents and impedances, such that calling it "an impedance" or referring to "a bias" strains credibility. Instead, Apple identified the low-pass filters within the bandpass as the relevant component or circuit. Petition, 57 ("switching from *Behbahani*'s high-power filter to its low-power filter changes … (i.e., the filter)"). These passages cited by Apple do not identify the entire bandpass as the changed component.

Apple's Reply never supports the new, bare assertion that the entire bandpass is "a circuit," "a component," or "an impedance." Reply, 9-11, 16-17; EX1042, ¶¶4-6. Instead, Apple pretends that it is up to Theta to "exclud[e] *Behbahani*'s larger [bandpass] filter block" from the claims. Reply, 17. It is not. This is Apple's burden of proof, which never shifts to Theta. Response, 47-48.

Rather than support its new interpretation with intrinsic evidence, Apple mischaracterizes Theta's position; completely ignores Professor Larson's actual testimony about why the bandpass would not be understood as a single circuit, component, or impedance in the signal path; and cites testimony about articles and hypothetical circuits. Indeed, Apple includes in its Reply a hypothetical circuit juxtaposed with deposition testimony from Professor Larson—even though that hypothetical circuit was never shown at his deposition.

Misdirections and tricks do not satisfy Apple's burden to show that a POSITA would have understood that the complicated bandpass structure that Apple

belatedly identified could be "a circuit," with a singular changed "an impedance" or "a bias current" in the claims. That is a fact question, requiring evidence. And the only evidence of record concerning such a POSITA's understanding here comes from Professor Larson. *See, e.g.*, EX2020, ¶¶81-83 ("a person of skill in the art ***would not understand*** a change to the overall impedance of the receiver, or of ***a section of the receiver chain containing multiple circuit blocks***, effected only by re-routing the signal path, to be dynamically changing 'an impedance,' … or 'an impedance' of a circuit 'in the signal path' as used in claims").

The entire bandpass is not one block, one component, one circuit, or one impedance, nor does it have only one bias current. *Id.*; *see also id.*, ¶¶46-48, 77-80 (noting the patents teach and claim adjustments to a single functional block). And crucially, no portion of the entire bandpass changes impedance or bias while it is "in the signal path." *Id.*, ¶¶81-83 ("no impedance remains in the circuit path and is adjusted").

Apple does not say otherwise. Even in Apple's new bandpass filter "component" theory, Apple still asserts that the alleged dynamic adjustment comes via ***changing the signal path*** to swap filter circuits. Reply, 17 ("its impedance is dynamically adjusted by switching between two alternative filter paths"). For all of the reasons already discussed at length in Theta's Response and above, changing the signal path to swap filters does not fit the challenged claim language. Apple's

new theory is unsupported, does not fit the claims, does not fit the intrinsic evidence, and has been rebutted by expert testimony. Each of the challenged claims should be upheld.

3. No impedance or bias in the signal path is dynamically changed per the claims.

Changing the signal path to swap the static low-pass filters in *Behbahani*'s system is not causing "***a*** bias current to be dynamically adjusted ***in*** one or more of the circuits ***in*** the receiver signal path" as in the challenged claims. EX1001, claim 1.

For each challenged claim, this is true because no single *Behbahani* impedance or bias both remains "in the signal path," and is dynamically adjusted in operation. *See, e.g.*, EX2020, ¶¶73-80. That conclusion is not altered by drawing a larger box that includes more "circuit blocks," impedances, and bias currents—because the identified adjustment is still accomplished in the *Behbahani* papers only by switching between static signal paths, rather than by changing "an impedance" or "a bias" that remains "in the signal path." *Id.*, ¶¶81-83; Reply, 17 ("adjusted by ***switching between two alternative filter paths***"); EX1043, 63:10-66:2 (static individual block impedances). The *Behbahani* path-switching approach is not what is claimed.

When Professor Tsividis wanted to teach and claim (different) inventions

that included "switching between two alternative filter paths," he did so directly in plain language. *See* EX1044 ('251 Patent) at 9:59-62 ("***change the operating signal pathway*** from the upper filter 308 to the lower filter 310"), claim 1 (static filter banks selectively "connected" to output to receive signal).

In the '164 Patent, Professor Tsividis instead taught and claimed dynamically varying "a bias current," or "an impedance," already "in the signal path." EX1001, 2:30-33 ("dynamically changing a bias current in the signal path"); Claim 20 ("dynamically adjust ***a*** bias of one or more of the plurality of circuits ***in*** the signal path"). The difference is plain from, and is reflected in, the language of each challenged claim.

4. Apple's Reply mischaracterizes rather than rebuts Theta's positions.

In Reply, Apple repeatedly tries to suggest that Theta has not responded with evidence to counter the Board's preliminary determination. *See* Reply, 1, 16-17. But Theta ***did*** show that a POSITA would understand the distinction between dynamically changing circuit parameters in the signal path, and re-routing the signal path. And Theta ***did*** show that a POSITA would not understand the bandpass Apple now points to as a singular circuit or impedance, or as having "a" singular changed bias current as in the claims. EX2020, ¶¶81-83; *see also id.*, ¶¶46-48, 77-80 ("the teachings and challenged claim language of the Tsividis Patents would be

understood by a person of ordinary skill in the art to be referring to impedance and bias current adjustments made dynamically for a single function block"); EX1001, 8:45-47, Fig. 8A:

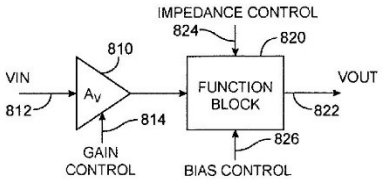

FIG. 8A

And Theta explained how the *Behbahani* papers instead show swapping of multiple "circuit blocks" within its bandpass. EX2020, ¶¶57-63; EX1004, Fig. 4(b) ("substitution of a scaled circuit block"):

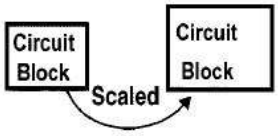

(b)

Apple's suggestion that Theta somehow relied only on Figure 6 of the '164 patent is demonstrably false. *See* Reply, 9. Theta showed how the claim language and all intrinsic evidence support Theta's reading. Response, 43-44, 49-54, 62; EX2020, ¶¶43-48 ("The Tsividis Patents teach these adjustments as changes effected in a single circuit block …"). And Theta showed how the disclosures resolve any ambiguity about whether Figure 6 would be understood as "a" single, changed circuit. EX2020, ¶46; EX1001, 7:52-54 ("FIG. 6 is an example of how ***a circuit's*** impedances may be scaled"), 7:65-67 ("In this way, an impedance can be

scaled in order to decrease ***a circuit's*** required drive current.").

Apple's accusatory Reply strategy also betrays Apple's failure to provide support for its own interpretation. Apple has the burden, which cannot be met by passing it to Theta, or by making conclusory assertions. Even if the Board allows Professor Abidi to assert, for the first time on Reply, that the bandpass "is" the "component or circuit in the signal path whose impedance is dynamically varied" (EX1042, ¶4)—which it should not do—this opinion is unsupported by intrinsic evidence, or even an assertion that a POSITA would understand it to be so. *Id.* It is also contrary to and rebutted by Professor Larson's well-supported opinion.

Cursory statements by Apple's expert do not overcome the claim language, intrinsic evidence, and expert testimony provided by Theta. The Rules of Evidence, including FRE 702 requiring expert testimony to be reliable and supported, apply here. 37 C.F.R. § 42.62. "Expert testimony that does not disclose the underlying facts or data on which the opinion is based is entitled to little or no weight." 37 C.F.R. § 42.65 (a); *In re Am. Acad. of Sci. Tech Ctr.*, 367 F.3d 1359, 1368 (Fed. Cir. 2004). Experts cannot properly offer opinions based solely on their say-so. *See, e.g.*, *Gen. Elec. Co. v. Joiner*, 522 U.S. 136, 146 (1997).

Much of Apple's Reply erects and attacks strawmen by misconstruing Theta's position. Theta did not argue the claims are somehow limited to "adjusting individual resistors or capacitors." Reply, 11. Theta did not argue that the "upper

resistor" of Figure 12 is part of the signal path when the switch is open. *Id.*, 12.

Apple's counsel did not show the diagrams on page 13 of its Reply to Professor Larson when posing its hypothetical "consistent" circuit. EX1043, 55-25-60:7. Unsurprisingly, the resulting testimony became confused, and is unclear as to the participants' varying understanding of the exact circuit being discussed—as well as what patent aspects are supposedly "consistent." *Id.* ("I don't quite understand how you're trying to reconfigure the circuit" … "two switches"). Whichever way the switches are implemented, varying an impedance by adding or subtracting resistance in parallel is not understood to be the same as re-routing the signal path to exchange whole filter components. *Id.*, 55:10-24.

Both parties accuse the other of misunderstanding the 2003 Tsividis article—that Apple introduced but did not rely on directly for its Ground. *See* Reply, 17. The article is extrinsic evidence, but as Theta rightly pointed out, is "***not*** a determiner of the scope" of the claims. Response, 60. Theta's explanation of the article is consistent with all of its disclosure. *Id.*, 60-62; EX2020, ¶¶64-72. The article discusses and shows the *Behbahani* approach of using "two filters" each with static construction, as in Figure 11, and contrasts that with "switching individual filter elements rather than entire filters … as shown in Figure 12." EX1011, 8-9.

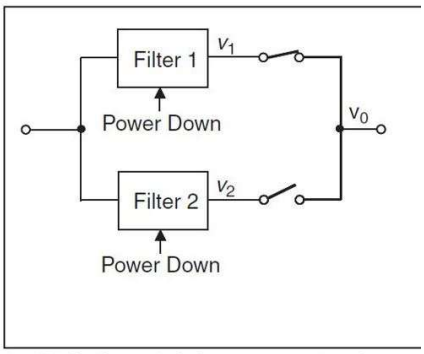

11. Method to switch between two signal proces

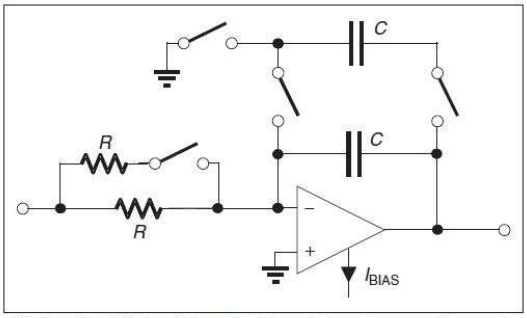

12. An active RC circuit in which dynamic impedance scaling can be performed without causing output transients.

The most salient point here is that there are distinct approaches discussed, and Professor Tsividis credited and cited *Behbahani* for *Behbahani*'s (different) approach. But Professor Tsividis also discussed "switching individual filter elements rather than entire filters," to "use a single filter and vary its structure dynamically"—as a different approach for future "investigation" and, in this case, patenting. *Id.*

5. The '164 Patent claims a different approach than the *Behbahani* papers disclose.

Professor Tsividis disclosed the *Behbahani* papers, and his 2003 article, to the Office when he applied for the '164 Patent and its parent. EX1002, 12-13; EX2019, 335. And Professor Tsividis sought and obtained patents teaching and claiming this new approach of ***changing an individual impedance or bias, while it is operational "in the signal path***." *See, e.g.*, EX1001, claim 1.

In addition to being evident in the claims and other disclosures of the '164 Patent, this new approach is discussed in his academic teaching. EX1011, 9-10;

EX2004, 9 (*citing* EX1001, EX1011, other papers: "However, techniques for applying the discussed techniques even ***in the presence of signals***, without causing disturbances at the output, have been developed"). In contrast, Professor Abidi's prior work described in the *Behbahani* papers relies instead on switching the signal path—and simply does not teach these new approaches. EX2021, 75:12-76:15 ("It's hypothetical and does not serve our purposes."); EX2020, ¶¶67-72; Response, 49-51.

The Examiner understood Professor Tsividis' claimed approach and its distinction over the cited art. This is presumptively so under *Advanced Bionics* given the lack of any showing of material error by Apple. *See, e.g.*, *Advanced Bionics, LLC v. MedEl Elektromedizinische Geräte GMBH*, IPR2019-01469, Paper 6 at 9 (P.T.A.B. Feb. 13, 2020) (precedential); *see also* Section III below.

In short, nothing in Apple's Reply rehabilitates its deficient Petition. Apple failed to show that *Behbahani*, including in alleged combination with *Tan*, discloses or suggests to a person of ordinary skill in the art dynamically adjusting "a" bias current, or "a" bias and "an" impedance, of a circuit that is, and remains, "in the signal path"—as taught and claimed in the '164 Patent. The alleged static filter swap of *Behbahani*—via re-routing of the signal path—does not disclose or suggest these elements, and each challenged claim must be upheld.

B. Apple's Petition and Reply failed to show that the *Behbahani* papers disclose or render obvious determining the signal strength of the interferer signal, or comparing signal strengths, according to the challenged claims

As discussed in Response and in Section I above, the challenged claims each require determining interferer signal strength and comparing with desired signal strength. *See, e.g.*, Response, 65 (citing claim language); EX1001, claim 1, claim 20 (comparing "the strength of the desired signal relative to the strength of the interferer signal."). Apple failed to show teaching or suggestion in the *Behbahani* papers of these independent claim elements—requiring specific signal strength determinations, followed by a comparison of the results. Response, 65-69.

Apple lumped these elements together and failed to discuss any mechanism for performing their specific functions. *Id.*, Petition, 37-44. Professor Abidi admitted that circuits for this purpose were not included in his design or discussed in the *Behbahani* papers. EX2021, 91:20-92:9, 94:3-18 ("…they're not discussed in the papers either though; right? A. Correct. Correct."); EX1042, ¶16 ("we did not discuss this circuit"). Apple also admitted that "*Behbahani* does not expressly teach calculating an absolute interferer signal strength"—relying instead on a conclusory and insufficient assertion that a POSITA would want to. Response, 66.

In Reply, Apple argues about measurement circuitry, as it does with its other Petitions. Reply, 23-28. Apple's arguments with respect to, e.g., determining an

interferer strength, are flawed and insufficient here. For example, Apple admits that the alleged peak detector thresholds they point to would be "cumulative" or composite measures, "capturing the desired and interferer signals" together. EX1042, ¶15. Apple has not shown any way to determine signal strength of an interferer component, or separately determine signal strength of a desired signal, from threshold crossing indications reflecting only cumulative signal. Response, 67.

In Reply, Apple again improperly attempted to gap-fill with late, unsupported testimony (see Paper 23)—suggesting that a POSITA would have intuited Professor Abidi's intent and understood what was admittedly not disclosed. EX1042, ¶13 ("It was our intent, which a POSITA would have understood, to include the described functionality …"); *see also id.*, ¶¶13, 14 ("assumes that a POSITA would have understood how to implement a conventional and well-understood technique"). These conclusory assertions—coming from a prior art author discussing his alleged intentions decades ago—fail to meets Apple's burden of proof here.

The Director has now required that all claim elements must be shown in the asserted prior art, rather than in assertions about common knowledge. Memorandum, Enforcement and Non-Waiver of 37 C.F.R. § 42.104(B)(4) and Permissible Uses of General Knowledge in Inter Partes Reviews, July 31, 2025, at

1 (general knowledge, including as described in "expert testimony," "may not be used to supply a missing claim limitation"); *see also DSS Technology Management, Inc. v. Apple Inc.*, 885 F.3d 1367, 1374-76 (Fed. Cir. 2018) (rejecting "conclusory statements and unspecific expert testimony" in support of finding an element in "common knowledge").

Apple's admission that a signal strength determination circuit is not found in the *Behbahani* papers, and its late reliance on general knowledge to fill in this gap, fails to meet its burden and warrants upholding of the claims.

In addition, Apple completely failed to even *allege* the required "compare" of the "strength of the desired signal" with the "strength of the interferer signal." *Id.*, 68-69. Apple only mentioned comparison as part of the alleged derivation of the interferer signal strength. *Id.*; Petition, 40. As Apple knows and ignored, the challenged claim language further requires a comparison *of the two determined strengths*. *See, e.g.*, EX1001, claim 20. Apple ignored the actual claim requirement and failed to show it in *Behbahani*.

And Apple failed to remedy this deficiency in Reply. Apple's only paragraph about comparing fails to show the specific required comparison. Reply, 23. Apple only contrasts the *Behbahani* approach with *an embodiment* of the '164 Patent, concerning "cumulative" (that is, potentially including both desired and interferer components) signal levels at different nodes. *Id*. Apple failed to show disclosure

or suggestion of the claimed compare of "the strength of the desired signal relative to the strength of the interferer signal." EX1001, claim 20.

Apple had the burden to produce competent evidence here and failed to do so. Every challenged claim requires determining an interferer signal strength, and several also require comparing that determined interferer signal strength to a determined desired signal strength with a determined interferer signal strength. *See, e.g.*, Response, 65. Apple failed to show how the specific required interferer strength determination could be possible with the *Tan* circuits it identified—because it is not. *Id.*, 67. And Apple failed to even acknowledge the specifics of what must be compared. Apple completely failed to show teaching or suggestion of these elements. For these additional reasons, the challenged claims should be upheld.

III. This trial should not have been instituted and should be dismissed

As raised by Theta before institution, and as confirmed by the Acting Director after institution, this proceeding should not have been instituted—including because the dispute centers on art first cited to the Examiner decades ago, and Apple failed to even attempt the required showing of material error by the Office. Prelim. Response, Paper 8, 55-61 (arguing that allowing "general and conclusory reference to 'the strength of the Proposed Grounds'" to substitute for such a showing is "inconsistent with … *Advanced Bionics*").

After Theta's Response identified the issue and detailed the split among Board panels (*see* Paper 8, 57-60), the Director resolved the split and clarified that under *Advanced Bionics*, a showing of material error is required in these circumstances, and that ***mere citation to the proposed grounds is not a sufficient showing***. *Ecto World*, IPR2024-01280, Paper 13 at 5 ("Petitioner's generalized statements as to the strength of its Petition fail to identify sufficiently a material error. Ordinarily, that would mean a denial of institution."). Here, Section 325(d) discretion was not exercised, on a disputed basis that was disallowed months later. Paper 12, at 21 ("by pointing to the proposed grounds").

Theta respectfully renews its request that this proceeding be dismissed in the Director's discretion pursuant to Section 325(d)—a result that comports with justice, Office policy, judicial efficiency, and the expectations of the parties.

In addition, Theta's long-settled expectations—in patent rights granted by the Office beginning in 2006—are frustrated by being forced to defend this weak, follow-on challenge. Theta's patent family was Examined with citation to *Behbahani* and *Tan*, as well as the 2003 Tsividis article. Theta's patents have been asserted and challenged in litigation against Samsung that ended in a favorable settlement hours before trial. The '330, '825, and '202 Patents have survived on their merits through prior IPRs filed by Lenovo and Motorola. Apple's arguments in this Petition are not distinct from those in its co-pending challenges to the older,

repeatedly challenged and tested, patents in this family.

Apple does not have a right to institution of any Petition. *Ecto World*, Paper 13 at 9 (*citing Mylan Labs. Ltd. v. Janssen Pharmaceutica, N.V.*, 989 F.3d 1375, 1382 (Fed. Cir. 2021)). Proceedings can be and are properly dismissed post-institution in the Director's discretion—including to promote "efficiency and integrity of the patent system." *See, e.g.*, *Hulu LLV v. Piranha Media Distribution, LLC*, IPR2024-01252, Paper 17, at 3 (P.T.A.B. April 17, 2025); *Sling TV, L.L.C. v. Realtime Adaptive Streaming LLC*, 840 F. App'x 598, 598-99 (Fed. Cir. 2021) ("the Board has the inherent authority to reconsider institution decisions (beyond the regulatory time for a patentee's entitlement to seek reconsideration)").

Here, Apple's ability to challenge would not be frustrated by dismissal, because it has maintained its parallel assertion of the *Behbahani* Papers in co-pending district court litigation in the Western District of Texas. EX2026 ("IPR prior art references").[3] For all of these reasons, the Board needn't proceed through review, oral argument, and drafting written decisions, and can and should dismiss

[3] The Texas court has refused Apple's requests to stay the *Theta v. Apple* litigation. *See* EX2027. Lenovo and Motorola, on the other hand, convinced an Illinois district court to stay based on ***Apple's*** IPRs, even ***after*** Lenovo's own IPRs proceeded to final written decision with all claims upheld. EX2028.

this proceeding in its discretion.

IV. Conclusion

As detailed in Theta's Response, with the '164 Patent and its parent, Professor Tsividis made foundational inventive and teaching contributions to the field, which have remained interesting and been broadly referenced. Response, 14-19; EX2004.

Apple's challenge here is weak, is cumulative of prior Examination, district court challenges, and prior IPRs, and fails on its lack of merit. As shown above, and in Theta's Response, Apple failed its burden to show disclosure or obviousness of elements of all challenged claims. For all of these reasons, the challenged claims must be upheld.

Dated: August 5, 2025

Respectfully submitted,

/ Aaron R. Hand /

Aaron R. Hand, Lead Counsel
Reg. No. 80,694
Corey Johanningmeier, Back-Up Counsel
(*pro hac vice*)
BUNSOW DE MORY LLP
701 El Camino Real
Redwood City, CA 94063
Telephone: 650-351-7248
Facsimile: 415-426-4744
ahand@bdiplaw.com
cjohanningmeier@bdiplaw.com

Counsel for Patent Owner

37 C.F.R. §42.24(d) CERTIFICATION

The undersigned hereby certifies that this submission, excluding the tables of contents, certificate of word count, exhibit list, and certificate of service, contains **5,596** words, as determined using the standard word counting feature of the Microsoft Word program.

Dated: August 5, 2025

/ Aaron R. Hand /

Aaron R. Hand
Reg. No. 80,694
BUNSOW DE MORY LLP
701 El Camino Real
Redwood City, CA 94063
Telephone: 650-351-7248
Facsimile: 415-426-4744
ahand@bdiplaw.com

Lead Counsel for Patent Owner

CERTIFICATE OF SERVICE

Petitioners have consented to e-mail service in this proceeding. Pursuant to 37 C.F.R. §42.6, the undersigned certifies that on August 5, 2025, a copy of the foregoing document was served by email upon the following counsel at the below email addresses:

Paul R. Hart, (Reg. No. 59,646)
Paul.Hart@eriseip.com
ERISE IP, P.A.
717 17th St., Suite 1400
Denver, Colorado 80202
Telephone: (913) 777-5600
Fax: (913) 777-5601

Adam P. Seitz (Reg. No. 52,206)
Adam.Seitz@eriseip.com
ERISE IP, P.A.
7015 College Blvd., Suite 700
Overland Park, Kansas 66211
Telephone: (913) 777-5600
Fax: (913) 777-5601

Dated: August 5, 2025

/ Aaron R. Hand /

Aaron R. Hand
Reg. No. 80,694
BUNSOW DE MORY LLP
701 El Camino Real
Redwood City, CA 94063
Telephone: 650-351-7248
Facsimile: 415-426-4744
ahand@bdiplaw.com

Lead Counsel for Patent Owner