IN THE UNITED STATES DISTRICT COURT
FOR THE WESTERN DISTRICT OF TEXAS
WACO DIVISION

THETA IP, LLC *Plaintiff,*	§	
-v-	§	**6:23-CV-00314-ADA**
APPLE INC., *Defendant.*	§	

CLAIM CONSTRUCTION ORDER AND MEMORANDUM IN SUPPORT THEREOF

Before the Court are the Parties' claim construction briefs: Defendant Apple, Inc.'s Opening and Reply briefs (ECF Nos. 53 and 61, respectively) and Plaintiff Theta IP, LLC's Response and Sur-Reply briefs (ECF Nos. 59 and 66, respectively). The Court provided preliminary constructions for the disputed terms one day before the scheduled hearing. This Order adopts most of the Court's preliminary constructions and slightly modifies one.

I. DESCRIPTION OF THE ASSERTED PATENTS

Plaintiff asserts U.S. Patent Nos. 7,010,330, 10,129,825, 10,524,202, 11,564,164, and 11,638,210, all of which are entitled "Power dissipation reduction in wireless transceivers." The abstracts for all five patents are either identical or very similar. The Abstract for the '330 Patent is as follows:

> Methods and circuits for reducing power dissipation in wireless transceivers and other electronic circuits and systems. Embodiments of the present invention use bias current reduction, impedance scaling, and gain changes either separately or in combination to reduce power dissipation. For example, bias currents are reduced in response to a need for reduced signal handling capability, impedances are scaled thus reducing required drive and other bias currents in response to a strong received signal, or gain is increased and impedances are scaled in response to a low received signal in the presence of no or weak interfering signals.

IPR2024-00820
Theta EX2025

’330 Patent at Abstract.

II. PRIOR LITIGATION HISTORY

On May 18, 2016, Plaintiff sued Samsung in the Eastern District of Texas alleging infringement of the ’330 Patent and U.S. Patent No. 9,331,728. Judge Payne construed several terms, some of which are at-issue in this case. *Theta IP, LLC v. Samsung Elecs. Co., Ltd.*, No. 2:16-cv-00527, ECF No. 86 (E.D. Tex. Jun. 6, 2017).

On February 28, 2020, Plaintiff sued Samsung in this Court alleging infringement of U.S. Patent Nos. 9,838,962, 10,129,825, and 10,524,202. The Court construed some of the terms at-issue in this case. *Theta IP, LLC v. Samsung Elecs. Co., Ltd.*, No. 6:20-cv-00160-ADA, ECF No. 57 (W.D. Tex. Jan 7, 2021). The Court also held a supplemental *Markman* hearing to construe some additional terms. *Id.*, ECF No. 266.

III. LEGAL STANDARD

The general rule is that claim terms are generally given their plain-and-ordinary meaning. *Phillips v. AWH Corp.*, 415 F.3d 1303, 1312 (Fed. Cir. 2005) (*en banc*); *Azure Networks, LLC v. CSR PLC*, 771 F.3d 1336, 1347 (Fed. Cir. 2014), *vacated on other grounds*, 575 U.S. 959, 959 (2015) (“There is a heavy presumption that claim terms carry their accustomed meaning in the relevant community at the relevant time.”) (internal quotation omitted). The plain-and-ordinary meaning of a term is the “meaning that the term would have to a person of ordinary skill in the art in question at the time of the invention.” *Phillips*, 415 F.3d at 1313.

The “only two exceptions to [the] general rule” that claim terms are construed according to their plain-and-ordinary meaning are when the patentee (1) acts as his/her own lexicographer or

(2) disavows the full scope of the claim term either in the specification or during prosecution. *Thorner v. Sony Computer Ent. Am. LLC*, 669 F.3d 1362, 1365 (Fed. Cir. 2012). The Federal Circuit has counseled that "[t]he standards for finding lexicography and disavowal are exacting." *Hill-Rom Servs., Inc. v. Stryker Corp.*, 755 F.3d 1367, 1371 (Fed. Cir. 2014). To act as his/her own lexicographer, the patentee must "clearly set forth a definition of the disputed claim term" and "'clearly express an intent' to [define] the term." *Thorner,* 669 F.3d at 1365. "For a statement during prosecution to qualify as a disavowal of claim scope, it must be 'so clear as to show reasonable clarity and deliberateness,' and 'so unmistakable as to be unambiguous evidence of disclaimer.'" *Genuine Enabling Tech. LLC v. Nintendo Co.*, 29 F.4th 1365, 1374 (Fed. Cir. 2022) (quoting *Omega Eng'g, Inc. v. Raytek Corp.*, 334 F.3d 1314, 1325 (Fed. Cir. 2003)).

"Like the specification, the prosecution history provides evidence of how the PTO and the inventor understood the patent." *Phillips*, 415 F.3d at 1317. "[D]istinguishing the claimed invention over the prior art, an applicant is indicating what a claim does not cover." *Spectrum Int'l, Inc. v. Sterilite Corp.*, 164 F.3d 1372, 1379 (Fed. Cir. 1998). The doctrine of prosecution disclaimer precludes a patentee from recapturing a specific meaning that was previously disclaimed during prosecution. *Omega Eng'g, Inc. v. Raytek Corp.*, 334 F.3d 1314, 1323 (Fed. Cir. 2003). "[F]or prosecution disclaimer to attach, our precedent requires that the alleged disavowing actions or statements made during prosecution be both clear and unmistakable." *Id.* at 1325–26. Accordingly, when "an applicant's statements are amenable to multiple reasonable interpretations, they cannot be deemed clear and unmistakable." *3M Innovative Props. Co. v. Tredegar Corp.*, 725 F.3d 1315, 1326 (Fed. Cir. 2013).

A construction of "plain and ordinary meaning" may be inadequate when a term has more than one "ordinary" meaning or when reliance on a term's "ordinary" meaning does not resolve

the parties' dispute. *O2 Micro Int'l Ltd. v. Beyond Innovation Tech. Co*., 521 F.3d 1351, 1361 (Fed. Cir. 2008). In that case, the Court must describe what the plain-and-ordinary meaning is. *Id.*

"Although the specification may aid the court in interpreting the meaning of disputed claim language . . ., particular embodiments and examples appearing in the specification will not generally be read into the claims." *Constant v. Advanced Micro-Devices, Inc.*, 848 F.2d 1560, 1571 (Fed. Cir. 1988). "[I]t is improper to read limitations from a preferred embodiment described in the specification—even if it is the only embodiment—into the claims absent a clear indication in the intrinsic record that the patentee intended the claims to be so limited." *Liebel-Flarsheim Co. v. Medrad, Inc.*, 358 F.3d 898, 913 (Fed. Cir. 2004).

Although extrinsic evidence can be useful, it is "less significant than the intrinsic record in determining 'the legally operative meaning of claim language.'" *Phillips*, 415 F.3d at 1317 (quoting *C.R. Bard, Inc. v. U.S. Surgical Corp.*, 388 F.3d 858, 862 (Fed. Cir. 2004)). Technical dictionaries may be helpful, but they may also provide definitions that are too broad or not indicative of how the term is used in the patent. *Id.* at 1318. Expert testimony may also be helpful, but an expert's conclusory or unsupported assertions as to the meaning of a term are not. *Id.*

IV. LEGAL ANALYSIS

A. Term #1: "signal path"

Term	Plaintiff's Proposed Construction	Defendant's Proposed Construction
#1 "signal path" U.S. Patent No. 7,010,330, Claims 1, 23, 29; U.S. Patent No. 10,129,825, Claims 3, 4, 8; U.S. Patent No. 10,524,202, Claims 7–11, 13; U.S. Patent No. 11,564,164, Claims 5, 7–9, 20; U.S. Patent No. 11,638,210, Claims 3, 6, 10	Plain and ordinary meaning	"path for analog signal"

<u>The Parties' Positions:</u>

Defendant contends that the claims and specification use "signal path" to refer to a "path for analog signal." Opening at 4. With respect to the former, Defendant contends that the claims "recite various analog components that can be included in the 'signal path'—amplifiers, mixers, filters, transistors, resistors, and capacitors." *Id.* (citing'330 Patent, Claims 1, 4–7, 10, 17, 20, 23–26, 29; '825 Patent, Claims 1–8; '202 Patent, Claims 1, 3–4, 6–8, 11–16, 18–19, 22–23; '164 Patent, Claims 5, 20; Opening, Ex. 1 at ¶ 25). Defendant contends that in "all 92 claims of the Asserted Patents, there is not a *single* disclosure of a 'signal path' containing digital circuitry." *Id.* at 4–5 (emphasis in Defendant's brief).

With respect to the specification, Defendant contends that the specifications of the Asserted Patents "repeatedly uses the term 'signal path' to refer to analog circuitry in a receiver." *Id.* at 5. More specifically, Defendant contends that Figure 1 depicts several analog components, *e.g.*, low-noise amplifier 102, I and Q mixers 104 and 106, low pass filters 108 and 110, and baseband amplifiers 114 and 116. *Id.* (citing '330 Patent at 4:15–17, 4:17–21, 4:32–47, 2:7–15, 2:18–25,

2:28–3:3; Opening, Ex. 1 at ¶ 22). Defendant contends that the specification "further indicates that *after* the signal path there can be digital circuitry, but this circuitry is *excluded* from the list of analog components the signal path is 'formed by'[.]" *Id.* (citing '330 Patent at 4:44–47, Opening, Ex. 1 at ¶¶ 23–24) (emphases in Defendant's brief). Defendant contends that Figure 1 "confirms that any digital circuitry (highlighted in red) lies *outside* of the 'signal path' (highlighted in blue)[.]"

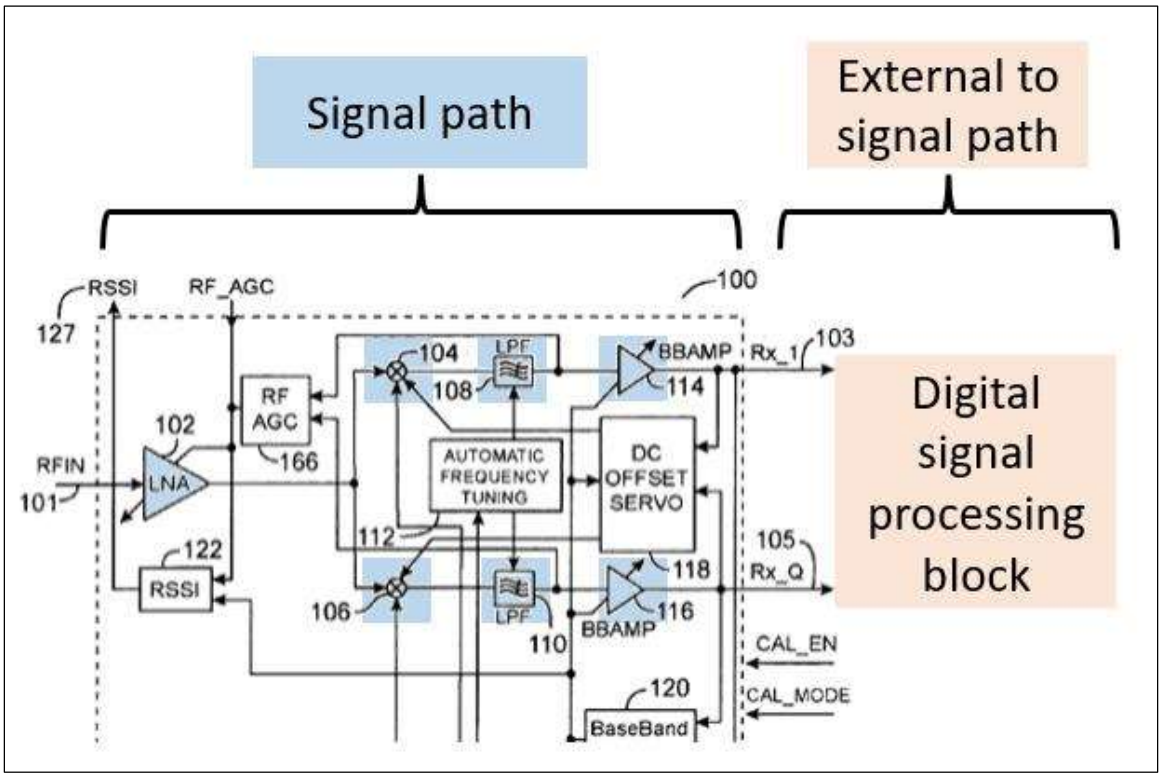

Id. (annotations and emphasis in Defendant's brief).

Defendant contends that Plaintiff's IPR statements support its proposed construction. *Id.* at 6. More specifically, Defendant contends that in two IPRs, Plaintiff argued that certain bias current setting circuits disclosed in a prior art reference are "not in the signal path because they indisputably **<u>do not carry alternating signal currents</u>** with any signal frequency component." *Id.* (citing Opening, Ex. 2 at 50; Ex. 3 at 57) (emphasis in Defendant's brief). Defendant contends

that "[b]y limiting the 'signal path' to portions of the circuit that 'carry alternating signal currents,' [Plaintiff] confirmed the view that the 'signal path' is the 'path for analog signal.'" *Id.* at 6–7 (citing Opening, Ex. 1 at ¶ 26).

Defendant finally contends that Plaintiff's argument for this term are inconsistent with its arguments for Term #2 ("impedance"). *Id.* at 7. More specifically, Defendant contends that Plaintiff asserts "impedance" should be construed as "opposition to the flow of alternating current." *Id.* Defendant contends that if "'impedance' is limited to alternating (i.e., analog) current, the 'signal path' where that 'impedance' occurs must be limited to a path for alternating (*i.e.*, analog) current." *Id.*

In its response, Plaintiff contends that Defendant's proposed construction improperly limits the claim term to the specific embodiments, *i.e.*, Figure 1. Response at 2, 4.

Plaintiff contends that "[n]o construction of 'signal path' is necessary, as the meaning of this term is apparent to an RF engineer of ordinary skill." *Id.* at 2. Plaintiff contends that the petitioners in two IPRs (Lenovo and Motorola) asserted that no construction of this term was necessary, and the PTAB agreed. *Id.* (citing Opening, Ex. F at 8–10).

Plaintiff contends that all of the asserted claims are "comprising" claims, which leaves open the possibility that there are digital components in the "signal path," and that there is nothing in the claim language limiting the claims to analog components. *Id.* at 3.

Plaintiff contends that a POSITA would understand that not all filters in RF applications are analog, but that there are also digital filters. *Id.* As such, Plaintiff contends that "[d]igital filtering or equalization would not be excluded from the scope of the claims—nor would be conversion of the AC signal to, or back from, digital if there were some purpose for doing so." *Id.* at 3–4.

Plaintiff contends that "[c]ourts often reject similar attempts to limit claims that do not specify analog or digital to one or the other." *Id.* at 4 (citing. *SuperGuide Corp. v. DirecTV Enterprises, Inc.*, 358 F.3d 870, 876–81 (Fed. Cir. 2004)). Plaintiff contends that as is the case here and also in *SuperGuide*, the preferred embodiments "may describe the [circuits] as including certain components, including a digital-to-analog converter, but that does not mean that the claims are so limited" to analog. *Id.* at 4.

Plaintiff contends that its IPR statements do not limit the claims. *Id.* More specifically, Plaintiff contends that "[t]he embodiment of the [prior art] reference being discussed was indisputably entirely analog—and the distinction being made was between analog AC signal-carrying circuits and analog DC bias circuits." *Id.* (citing Opening, Ex. 2 at 49–52). Plaintiff contends that its IPR statements were arguments about "circuit topology and function, not an analog/digital distinction." *Id.*

In its reply, Defendant contends that "the only written description of a 'signal path,' as recited in the claims, refers to a 'path for analog signal.'" Reply at 2.

Defendant contends that Plaintiff's argument that the patentee did not intend to limit the claims to a "path for an analog signal" is contrary to the record in three ways. First, Defendant characterizes Plaintiff's arguments as attorney argument. *Id.* Defendant further contends that Plaintiff's argument, that the claims "recite filters and that digital filtering exists," "lacks any evidentiary support and ignores the full language of the claims." *Id.* Defendant contends that it provided evidence and unrebutted expert testimony that a POSITA would understand that the claims recite a combination of analog components. *Id.* Defendant contends that the claims do not recite a "signal path" with one component, but rather multiple components. *Id.* at 2–3. Defendant contends that a POSITA would understand, in the "full context of the claims," that the components

are analog components. *Id.* (citing '330 Patent, Claims 1, 3; Opening, Ex. 1 at ¶ 25). Based on that, Defendant contends that the "Asserted Claims' consistent and repeated recital of a 'signal path' that is comprised of a combination of analog components clearly indicates that the patentee intended to limit the claims to a 'path for analog signal'—just as the specification teaches." *Id.* at 3.

Defendant contends that Plaintiff's arguments are consistent with the Defendant's position that "signal path" is a "path for analog signal." *Id.* More specifically, Defendant contends that Plaintiff has argued that "impedance" should be limited to an alternating current signal. *Id.* (citing Response at 7–9; Opening, Ex. 2 at 50; Opening, Ex. 3 at 57). Defendant contends that Plaintiff's argument means that "'signal path' where that 'impedance' occurs must also be limited to a path for alternating (*i.e.*, analog) current." *Id.* Defendant contends that Plaintiff's arguments with respect to "signal path" and "impedance" are inconsistent and Plaintiff fails to reconcile them. *Id.*

Second, Defendant contends that Plaintiff's "IPR arguments are consistent with the patentee's intent to limit 'signal path' in the claims to a 'path for analog signal.'" *Id.* In particular, Defendant contends that "[r]ather than distinguishing Rauhala based on topology, [Plaintiff] unambiguously argued that the bias signals in Rauhala are 'not in the signal path' because of the characteristics of the signal." *Id.* at 4 (citing Opening, Ex. 2 at 50; Opening, Ex. 3 at 57). Defendant contends that "[h]aving succeeded with that argument at the PTAB, [Plaintiff] cannot now argue for a different understanding of the claims for purposes of this litigation." *Id.* (citing *Aylus Networks, Inc. v. Apple Inc.,* 856 F.3d 1353, 1360 (Fed. Cir. 2017)).

Third, Defendant contends that the specification "clearly differentiates between the 'signal path' that is the focus of the alleged invention, and portions of a device that might relate to digital signals." *Id.* (citing Opening, Ex. 1 at ¶¶ 22–24).

With respect to Plaintiff's argument that no construction is necessary because a RF engineer would understand the meaning of this term, Defendant contends that not only does Plaintiff fail to cite any evidence, but the undisputed evidence is that "in the context of the claims and intrinsic record, an RF engineer would understand 'signal path' to be a 'path for analog signal.'" *Id.* (citing Opening, Ex. 1 at ¶¶ 22–25).

In its sur-reply, Plaintiff contends that Defendant "is trying to limit the Asserted Claims based only on a conclusory expert argument that the embodiments disclose only analog." Sur-Reply at 1 (citing Reply at 2). Plaintiff contends that limiting to disclosed embodiments is both legally improper and "factually wrong." *Id.* (citing cases).

With respect to the latter, Plaintiff contends that the specification does not limit analog embodiments in the signal path, but also discloses both analog-to-digital conversion and digital signal processing in the signal path. *Id* For example, Plaintiff contends that the patents "only explicitly discuss 'analog' RF signals in the context of an 'analog-to-digital converter' in the signal path." *Id.* (citing '330 patent at 4:32–47).

In light of these disclosures, Plaintiff contends that Defendant's expert has "taken the incredible position that the 'signal path' somehow stops before the signal reaches the 'digital ***signal*** processing' block." *Id*. (citing Reply at 4; Opening, Ex. 1 at ¶ 23) (emphasis in Plaintiff's brief). Plaintiff contends that Defendant and its expert "do not answer the obvious question of how the analog-to-digital converter could convert the signal, or how the digital signal processing block could process the signal, without first receiving the signal." *Id.* (citing Sur-Reply, Ex. L at 30:7–32:22). Rather, Plaintiff contends that Defendant's expert only provides an *ipse dixit* opinions. *Id.* (citing Sur-Reply, Ex. L at 27:3–28:17, 34:10–35:13, 26:3–28:17, 30:7–32:22). Plaintiff contends that Defendant's expert's opinions improperly limit the claim scope based on

what he believes the specification discloses. *Id.* at 2–3 (citing Sur-Reply, Ex. L at 26:3–28:17, 30:7–32:22, 31:23–25).

Plaintiff contends that the meaning of this term is very simple; namely, "signal path" is the path of the signal. *Id.* at 3. Plaintiff contends that Defendant is incorrect that "signal path" is limited to analog signals. *Id.* More specifically, Plaintiff contends that Defendant admits that there are multiple components in the signal path and that a POSITA would understand that some of those components could be digital, *e.g.*, digital filter and analog-to-digital converters. *Id.* (citing Reply at 2; Response at 3-4; Sur-Reply, Ex. L at 17:23–18:2; '330 Patent at 4:32-47; Sur-Reply, Ex. L at 32:24–33:7, 37:1–3). Plaintiff further contends that given that the claims are "comprising" claims, there could be unclaimed components that are digital. *Id.* (citing Response at 3-4; Sur-Reply, Ex. L at 22:21–23:20).

Plaintiff contends that a POSITA would understand that the received RF signal "can be both analog or digital at different points in the signal path." *Id.* (citing Sur-Reply, Ex. L at 35:15–36:25). With respect to Defendant's argument that Plaintiff made inconsistent arguments regarding this term and "impedance," Plaintiff contends that that its statements that impedance being an analog concept or DC bias currents not being in the signal path "may indeed refer to an analog ***portion*** of the signal path, but they are in no way admissions or proof that the ***entirety*** of such path must be analog." *Id.* (emphases in Plaintiff's brief). Plaintiff further contends that the patents teach that the entire signal path is not analog. *Id.* at 3–4 (citing '330 Patent at 4:32–47).

<u>The Court's Analysis:</u>

After reviewing the parties' arguments and considering the applicable law, the Court agrees with Plaintiff that this term should be construed according to its plain-and-ordinary meaning for

the reasons that follow. ***First***, the "heavy presumption" is that terms should be construed according to their plain-and-ordinary meaning. *Azure Networks*, 771 F.3d at 1347. ***Second***, Defendant does not allege lexicography or disclaimer, which are the only two exceptions to the general rule that a term should be construed as having its plain-and-ordinary meaning. *Thorner*, 669 F.3d at 1365.

Third, the Court agrees with Plaintiff that no construction of "signal path" is necessary and that that term should be construed according to its plain-and-ordinary meaning as a POSITA would understand readily understand that the term "signal path" simply means the "path of the signal," which plainly is not limited to analog signals. Defendant does not even appear to argue that the plain meaning of "signal path" is limited to analog signals.

Fourth, there is nothing in the claims, nor does Defendant identify any such language, that limits the "signal path" to analog signals. As such, Defendant's proposed construction improperly "revise[s] …the explicit language of the claims." *Generation II Orthotics Inc. v. Med. Tech. Inc.*, 263 F.3d 1356, 1365 (Fed. Cir. 2001).

Fifth, there is no claim language that limits the signal path to a single component, nor does Defendant even attempt to argue that the "signal path" consists" of a single component. By contrast, a POSITA would understand that the signal path comprises multiple components. For example, Claim 3, Limitation [a] of the '825 Patent recites that the "receiver signal path" comprises a "plurality of circuits" wherein each "plurality of circuits" "includes an amplifier, a filter, and a mixer[.]" *See also* '330 Patent, Claim 1, Preamble; '202 Patent, Claim 7, Preamble; '164 Patent, Claim 5, Limitation [a]. Based on that, the Court agrees with Plaintiff that a POSITA would understand that some of the recited components, *e.g.*, filter, could be digital, which means that Defendant's proposed construction is incorrect.

Similarly, all of the Asserted Claims are "comprising" claims, which means there could be there could be unclaimed components that are digital. As such, Defendant's proposed construction improperly limits "signal path" to analog signals.

Sixth, Defendant's proposed construction improperly limits the claim term to a disclosed embodiment. *Liebel-Flarsheim*, 358 F.3d 898, 913 (Fed. Cir. 2004) ("[I]t is improper to read limitations from a preferred embodiment described in the specification—even if it is the only embodiment—into the claims absent a clear indication in the intrinsic record that the patentee intended the claims to be so limited."). More specifically, Defendant's proposed construction attempts to limit the claim scope to the embodiment disclosed in Figure 1. *See, e.g.*, Opening at 5–6. But the evidence Defendant cites fails to meet the "clear indication" standard required to limit a claim term to a particular embodiment. With respect to Defendant's argument that Figure 1 depicts analog components only in the signal path and thus the signal path should be limited to analog signals, the Court disagrees because Defendant's argument is circular. More specifically, Defendant's argument first presupposes that the digital signal processing block is "external to the signal path" before arguing that because there are only analog circuit components in the "signal path," the "signal path" is limited to analog signals only, *i.e.*, the "signal path" is the "path for analog signal(s)." In other words, Defendant defines the "signal path" to only include analog circuit components before concluding that because the signal path only has analog circuit components, it is the path for analog signals only.

Seventh, the Court disagrees with Defendant that the patentee disclaimed non-analog signals from the "signal path" while distinguishing the Rauhala prior art reference. "For a statement during prosecution to qualify as a disavowal of claim scope, it must be 'so clear as to show reasonable clarity and deliberateness,' and 'so unmistakable as to be unambiguous evidence

of disclaimer.'" *Genuine Enabling Tech.*, 29 F.4th at 1374. Defendant does not cite to or quote any statement that evidences a clear and unmistakable disclaimer of claim scope. Rather, the pages that the POPR that Defendant cites to are not directed toward the "signal path" claim term, but are rather directed towards the "impedance" claim term. Opening, Ex. 2 at 50; Ex. 3 at 57. The fact that the alleged disclaimer is directed to a totally different claim term falls well short of the "exacting" standard required for a finding of disclaimer. *Hill-Rom Servs.*, 755 F.3d at 1371 ("The standards for finding lexicography and disavowal are exacting.").

Furthermore, the patentee distinguished the Rauhala reference on the basis that rather than disclosing an impedance, it only disclosed resistors (R1, R2, and R3). Opening, Ex. 2 at 49. The patentee further argued that the reactance component of impedance was zero because Rauhala only "applies only to a static DC bias current kI[,]" *i.e.*, it does not apply an alternating current. *Id.* at 50. Based on those statements, the Court agrees that the patentee's IPR statements were directed towards "circuit topology and function, not an analog/digital distinction." Response at 4. As such, Defendant fails to provide clear and unmistakable evidence of a disclaimer.

Eighth, the fact that the petitioners in two IPRs (Lenovo and Motorola) argued that no construction was needed in the IPRs further reinforces the Court's decision that plain-and-ordinary meaning is the correct construction, and that Defendant's proposed construction is incorrect. Response, Ex. F at 8–10.

Therefore, for the reasons described above, the Court finds that the term should be construed according to its plain-and-ordinary meaning.

B. Term #2: "impedance"

Term	Plaintiff's Proposed Construction	Defendant's Proposed Construction
#2: "impedance" U.S. Patent No. 7,010,330, Claims 1, 23, 29; U.S. Patent No. 10,129,825, Claims 4, 8; U.S. Patent No. 10,524,202, Claims 7, 8; U.S. Patent No. 11,564,164, Claim 7; U.S. Patent No. 11,638,210, Claims 3, 10	Plain and ordinary meaning, but if construed, should be construed as "opposition to the flow of alternating current"	Plain and ordinary meaning

<u>The Parties' Positions:</u>

The Court previously construed this term as "plain-and-ordinary meaning." *Samsung*, No. 6:20-cv-00160, ECF No. 57 at 5 (W.D. Tex. Jan. 7, 2021).

Defendant contends that Plaintiff's proposed construction focuses on one meaning of this term, while excluding others. Opening at 8. Defendant contends that nothing has changed since the *Samsung* case, so the Court should maintain is previous construction. *Id.*

Defendant contends that Plaintiff's proposed construction "fails to account for the multiple ways 'impedance' i[s] used in the asserted claims[,]" *e.g.*, as an electrical characteristic or as an electrical component. *Id.* (citing '330 Patent, Claim 1; '202 Patent, Claim 7; '825 Patent, Claim 2). Defendant contends that when "impedance" is used to refer to an "impedance component," a POSITA would understand that it means "'[r]esistance or reactance'—with no mention of the type of current (alternating or direct) it opposes." *Id.* at 9 (citing Opening, Ex. 1 at ¶ 31).

Defendant contends that because a definition of "impedance" ("[c]ombined opposition to current resulting from resistance, capacitance, and inductance") does not mention of the type of current (alternative or direct), a POSITA would understand that "impedance" is a broader than

Plaintiff's proposed construction. *Id.* (citing Opening, Ex. 7 at 364). Defendant contends that Plaintiff's prior briefing also recognized that the meaning of "impedance" is broader than its proposed construction when it asserted that "for a resistor with value R, the impedance equals the resistance, $Z_R=R$ (also known as 'resistive impedance')[.]" *Id.* (quoting Opening, Ex. 5 at 18).

Defendant contends that Plaintiff's proposed construction is the same proposed construction it proposed in prior IPRs and is an improper attempt to inject validity arguments through claim construction." *Id.*

Defendant contends that a POSITA would readily understand the meaning of the term in each claim. *Id.* at 10.

In its response, Plaintiff contends that the issue of impedance surfaced during an IPR where Lenovo incorrectly "pointed to a change in a DC bias current as an alleged change in impedance according to the claims." Response at 6. Plaintiff contends that during the IPR it argued that the patents describe "impedance" in terms of an AC signal circuit parameter and "resistance" in terms of a DC bias circuit parameter. *Id.* Plaintiff contends that the PTAB did not "yet reach or decide this dispute over how impedance is used in the patents." *Id.* (citing Response, Ex. F at 9–10; Opening, Ex. 8 at 33).

Plaintiff contends that Defendant's invalidity contentions "incorrectly alleged that DC bias current changes show changed impedance[.]" *Id.* Plaintiff contends that Defendant "filed an opening brief and submitted expert testimony that together do not even agree with the consensus dictionary definition of impedance as an AC circuit parameter." *Id.*

Plaintiff contends that other courts have construed the meaning of "impedance" including Judge Payne. *Id.* at 6–7.

Plaintiff contends that it believes that this will be a live issue, so it provides some arguments in the event the Court wishes to decide that issue now. *Id.* at 7. Plaintiff contends that "impedance" is "well-known term of art with a well-known definition to a person of ordinary skill in the art." *Id.* (citing Response, Ex. G at ¶¶ 54–56).

Plaintiff contends that the specification "uses the term consistently with its ordinary definition of total opposition to the flow of alternating current." *Id.* Plaintiff contends that "the impedance of the load seen by the driver is the total AC opposition including both resistive and capacitive (reactance) components." *Id.* (citing '330 Patent at 7:44–52, Figure 6). Plaintiff contends that the discussion regarding "frequency response" is also consistent with a POSITA's understanding that "impedance is an alternating current, frequency domain circuit analysis parameter." *Id.* (citing '330 Patent at 7:44–52, Figure 6; Response, Ex. G at ¶¶ 54–56).

Plaintiff contends that because "impedance is indisputably an AC circuit parameter, persons of skill in the art do not ordinarily refer to a resistance to a DC current as an impedance." *Id.* (citing Response, Ex. G at ¶ 56). In the same way, Plaintiff contends that the Asserted Patents do not use "impedance" to describe resistance to a DC current. *Id.* at 7–8 (citing '330 Patent at 7:35–41, 8:12–14). Plaintiff contends that, by contrast, the Asserted Patents describe "impedance" to describe reactance and an AC signal current. *Id.* (citing '330 Patent at 7:44–59).

Plaintiff contends that during prosecution Applicant "distinguished changes in a DC current, allegedly shown in prior art, from the claimed impedance change affecting an AC switching current." *Id.* at 9 (citing Opening, Ex. 10 at 8).

Plaintiff contends that every dictionary and textbook cited by the parties defines "impedance" as an AC parameter. *Id.* at 9–10 (citing Response, Ex. D at 364; Ex. E at 365; Ex. F at 9, 11; Wikipedia, Electrical Impedance, *at* https://en.wikipedia.org/wiki/Electrical_impedance).

Plaintiff contends that Defendant is incorrect that the dictionary definition that Defendant's expert cites does not include the AC concept. *Id.* at 10 (citing Opening at 9). More specifically, Plaintiff contends that that dictionary defines "impedance" as the "total opposition that a circuit presents to an alternating current[.]" *Id.* at 11 (citing Opening, Ex. 6 at 1055). Plaintiff contends that Defendant "fails to cite or include in its dictionary excerpts exhibit the page for this electrical impedance definition (shown above) that contradicts its argument" and that "[t]his kind of selective and potentially misleading citation is one of the reasons dictionaries and similar extrinsic evidence come second to the intrinsic evidence in determining claim meaning." *Id.*

Plaintiff contends that "all of the extrinsic evidence agrees with the way the term 'impedance' is used in the patents and prosecution history—exclusively to refer to an alternating current parameter of a circuit or circuit component." *Id.*

In its reply, Defendant contends that "has no response to the fact that its construction does not consistently apply to all of the claims that use the term 'impedance.'" Reply at 5. Defendant contends that:

> Rather than responding to the actual issue—that the term "impedance" has different meanings when used to refer to an electrical characteristic rather than a component—[Plaintiff] tries to evade the evidence by accusing [Defendant] of omitting a definition from the same dictionary related to impedance as an electrical characteristic.

Id. at 6 (citing Response at 11). Defendant contends that the differing definitions show that a POSITA would understand that "impedance" "can be used multiple ways" and would understand the applicable meaning based on the claim language. *Id.*

Defendant contends that Plaintiff does not dispute that it previously recognized that the impedance of a resistor is simply its resistance. *Id.* (citing Opening, Ex. 5 at 18).

With respect to Plaintiff's argument that the intrinsic evidence justifies limiting "impedance," Defendant contends that Plaintiff "fails to cite anything in the Asserted Patents that expressly limits 'impedance' to an alternating current parameter[,]" but rather only "repeatedly cites to two portions of the specification … and asks the Court to divine a clear intent to limit 'impedance' to alternating current." *Id.* (citing '330 Patent at 7:35–59, 8:12–14).

In its sur-reply, Plaintiff contends that if Defendant holds to its argument that "impedance" "refers to opposition to alternating current," then Plaintiff's concern about the scope of the term is "much reduced." Sur-Reply at 4.

Plaintiff contends that the dictionary that Defendant's expert relies on "did in fact incorporate a definition for electrical impedance as '[t]he total opposition that a circuit presents to an ***alternating current*** … .'" *Id.* at 5 (emphasis in Plaintiff's brief). Plaintiff contends that Defendant ignores this definition in the dictionary it cites, but rather cites to a different sub-definition. *Id.* Plaintiff contends that Defendant's briefs and expert testimony "might provide an object lesson in why the Federal Circuit puts dictionaries, and expert testimony, at the bottom of the claim construction evidence hierarchy." *Id.* at 6.

With respect to Defendant's argument that the Asserted Patents do not expressly limit the meaning of impedance, Plaintiff contends that "express limitation is not required when the plain and ordinary meaning of a term is understood and agreed from context of the patent's teachings." *Id.*

Finally, Plaintiff states that it "understands the Court's stated preference for not weighing in with constructions of ordinary terms of art—at least prior to the full crystallization of disputes over scope that require resolution." *Id.* at 6–7. But Plaintiff states that it "believes that there is (at

least) a latent dispute over the scope of impedance in the context of these claims and patents." *Id.* at 7.

The Court's Analysis:

After reviewing the parties' arguments and considering the applicable law, the Court agrees with Plaintiff that this term should be construed according to its plain-and-ordinary meaning for the reasons that follow. ***First***, the "heavy presumption" is that terms should be construed according to their plain-and-ordinary meaning. *Azure Networks*, 771 F.3d at 1347. ***Second***, neither side alleges lexicography or disclaimer, which are the only two exceptions to the general rule that a term should be construed as having its plain-and-ordinary meaning. *Thorner*, 669 F.3d at 1365.

Third, "impedance" is a well-understood electrical engineering term, and one that a POSITA would learn about in his or her sophomore year of college. As such, given that the term is a fundamental term in electrical engineering, the Court does not believe that this term requires construction and that plain-and-ordinary meaning is appropriate.

Fourth, the Court previously construed this term as "plain-and-ordinary meaning" without providing further guidance, in prior case. *Samsung*, No. 6:20-cv-00160, ECF No. 57 at 5. As such, until this dispute is fully ripe and before the Court, for consistency, the Court declines to provide further construction beyond plain-and-ordinary meaning.

That said, while it is the Court's typical practice to have a mini-*Markman* hearing to construe any claim construction disputes that may arise or only become clear after Court's claim construction order, in this case, it is not clear whether one will be needed or helpful in this case as the nature of the dispute may not be a claim construction one, but rather whether one side is not properly interpreting the plain-and-ordinary meaning.

Therefore, for the reasons described above, the Court finds that the term should be construed according to its plain-and-ordinary meaning.

C. Term #3A: "switching current"
Term #3B: "drive current"

Term	Plaintiff's Proposed Construction	Defendant's Proposed Construction
#3A: "switching current" U.S. Patent No. 7,010,330, Claims 1, 23	Plain and ordinary meaning	"the current that carries a signal through a load" Or, if plain and ordinary meaning, "current required to change the state of a transistor/system"
#3B: "drive current" U.S. Patent No. 10,129,825, Claim 8; U.S. Patent No. 11,638,210, Claim 10	Plain and ordinary meaning	Plain and ordinary meaning, which is "current required to keep a transistor/system at a steady state" or "the current that carries a signal through a load"

<u>The Parties' Positions:</u>

Defendant contends that the Court needs to construe this term "to avoid later dispute over the meaning of these terms" because Plaintiff "has not been forthcoming regarding its understanding of these terms." Opening at 10.

Defendant contends that that while the intrinsic evidence regarding this term is "limited," it still supports Defendant's proposed construction for "switching current." *Id.* at 11. More specifically, Defendant contends that during prosecution, Applicant stated that the Clark prior art reference disclosed a bias current, which is "not the same as a switching current" and that "a switching current is a dynamic or transient current that occurs during voltage transitions." *Id.* (quoting Opening, Ex. 10 at 8). Defendant contends that its proposed construction is "highly similar" to Plaintiff's description of "switching current" during prosecution. *Id.* Defendant

contends that "both descriptions of "switching current" recognize that it is an amount of current related to state changes (such as voltage transitions)." *Id.* (citing Opening, Ex. 1 at ¶ 39).

Defendant contends that the intrinsic evidence, apart from the prosecution history, provides little guidance for "switching current." *Id.* More specifically, Defendant contends that the specification does not use the term "switching current"[1] and the two claims that use "switching current" "do little to explain the term's meaning" *Id.* at 11–12 (citing '330 Patent, Claims 1, 23).

With respect to "drive current," Defendant contends that the claims and specification of the Asserted Patents "indicate that a 'drive current' can change based on adjustments to an impedance in a circuit." *Id.* (citing '825 Patent, Claims 7, 8; '210 Patent, Claims 1, 10; '825 Patent at Figure 6, 6:20–21, 7:47–8:3, 9:24–26, 9:60–62, 10:19–21; Opening, Ex. 1 at ¶ 38). Defendant contends that this evidence supports its proposed construction. *Id.* Defendant contends that "[s]ince a drive current is the amount of current necessary to keep a system in a steady state, changes to that system can cause the drive current to vary by altering how much current that system requires." *Id.*

Defendant contends that extrinsic evidence—its expert declaration—also supports its proposed constructions. *Id.* More specifically, Defendant contends that a POSITA "would have understood 'switching current' to be a current required to change the state of a transistor or system and 'drive current' to be a current required to keep a transistor or system at a steady state." *Id.* (citing Opening, Ex. 1 at ¶ 36). Defendant contends that a POSITA would understand that wireless receivers have different modes of operation and that "each of these modes have significantly different electrical requirements, including current requirements." *Id.* (citing Opening, Ex. 1 at ¶ 36). Defendant contends that a POSITA "would have understood that the process of switching

[1] Defendant contends that portion of the specification that Applicant cited during prosecution discusses "drive current" and not "switching current." Opening at 12 (citing '330 Patent at Figure 6, 7:44–67).

between operability modes" is called a transitional state, which also has its "own electrical requirements, including current requirements." *Id.* (citing Opening, Ex. 1 at ¶ 36). Defendant contends that a POSITA would understand that "switching current" refers to "the current provided to the system during a given transitional state between operability modes" and that "drive current" refers to current provided to the system while the system is *in* a particular operability mode." *Id.* (citing Opening, Ex. 1 at ¶ 36) (emphasis in Defendant's brief).

In its response, Plaintiff contends that Defendant proposed "construing these simple, easily understood terms" and that it "paid an expert to come up with a tortured interpretation, based on state transitions and steady-state currents, that appears completely divorced from—and even contrary to—the patent specification." Response at 12 (citing Opening at 11–13).

Plaintiff contends that the Asserted Patents use "drive current" "in the ordinary sense to describe a current that drives (that is, carries) a signal through a load."

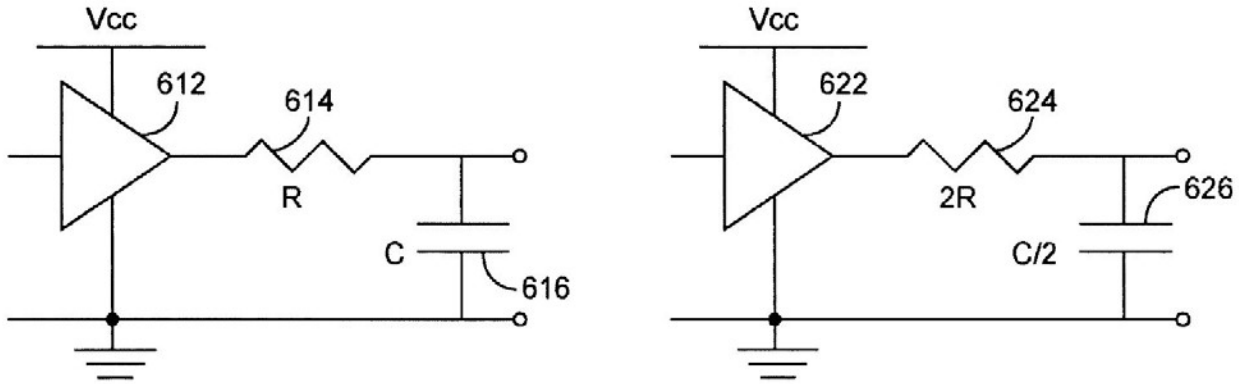

Id. (citing '330 Patent at 7:44–59, Figure 6). Plaintiff contends that the claim language and specification describe that the "drive currents" are in the "signal path" and "driv[e] RF signals in and out of components in the path." *Id.* (citing '330 Patent, Claims 1, 23, 9:37–39, 4:42–44).

Plaintiff contends that the Asserted Patents distinguish "drive currents" from non-signal carrying bias currents. *Id.* at 13 (citing '330 Patent at 7:70–67). Plaintiff contends that Applicant

"also distinguished bias currents from 'switching currents' (an alternate way to refer to drive currents here)" during prosecution. *Id.* (citing Opening, Ex. 10 at 8). In particular, Plaintiff contends that "'a bias current is a DC or quiescent current,' while 'a switching current is a dynamic or transient current'—one that switches, for example because it carries an RF signal." *Id.*

With respect to Defendant's argument that Applicant cited to passages regarding "switching current," Plaintiff contends that "a drive current that carries a switching RF signal through a load will be a current that switches[.]" *Id.*

With respect to Defendant's argument regarding "states," Plaintiff contends that the Asserted Patents do not discuss "states," nor "the current required to maintain or transfer between them." *Id.* Plaintiff contends that Defendant's expert's opinions "about steady state and transition currents are devoid of citation—to the patents or anything else[,]" and thus are conclusory, which is not helpful to a court. *Id.* (citing Opening, Ex. 1 at ¶ 36).

Plaintiff contends that the "Asserted Patents and the prosecution history of the '330 Patent provide all of the explanation needed to understand what a drive current and a switching current refer to in the context of the claims." *Id.* at 14.

In its reply, based on Plaintiff's representation, Defendant agrees that "drive current" and "switching current," as used in the Asserted Patents, mean the same thing. Reply at 8 (citing Response at 13).

Defendant also agrees with Plaintiff that the plain-and-ordinary meaning of "drive current" and "switching current" is a "current that drives (that is, carries) a signal through a load." *Id.* (citing Response at 13). Defendant contends that "this is consistent with its proposed construction for 'drive current'—i.e., the current that drives/carries a signal through to a load is the current necessary to maintain that state." *Id.*

In its sur-reply, Plaintiff contends that Defendant abandoned its proposed construction that based on "states" in its reply. Sur-Reply at 7. Plaintiff contends that Defendant's alternate construction ("the current that carries a signal through a load") is improper because Defendant has not shown that the term requires construction and because Defendant's proposed construction "would risk improperly limiting the claim terms based on description of an embodiment in the specification." *Id.*

Plaintiff contends that it has been consistent in arguing that the terms do not require construction. *Id.* Plaintiff contends that its arguments that "examples in the specification that are consistent with (and informative of) plain meaning to a person of ordinary skill in the art[,]" does not mean that it "suggested or intended that these explanations be adopted as official constructions." *Id.* Plaintiff further contends that "[i]t is not clear that 'current that carries a signal through a load' would be easier to apply and understand than 'drive current.'" *Id.*

Plaintiff contends that, by contrast, "the Asserted Patents and the prosecution history of the '330 Patent provide all of the explanation needed to understand what a drive current and a switching current refer to in the context of the claims." *Id.* at 8 (citing Response at 12–14).

<u>The Court's Analysis:</u>

After reviewing the parties' arguments and considering the applicable law, the Court agrees with Plaintiff that this term should be construed according to its plain-and-ordinary meaning for the reasons that follow. ***First***, the "heavy presumption" is that terms should be construed according to their plain-and-ordinary meaning. *Azure Networks*, 771 F.3d at 1347. ***Second***, neither side alleges lexicography or disclaimer, which are the only two exceptions to the general rule that a term should be construed as having its plain-and-ordinary meaning. *Thorner*, 669 F.3d at 1365.

Third, both "switching current" and "drive current" are well-understood electrical engineering terms. As such, given that both terms are a fundamental terms in electrical engineering, the Court does not believe that this term requires construction and that plain-and-ordinary meaning is appropriate.

Fourth, the specifications of the '330, '825, and '210 Patents do not use the word "states," which indicates that Defendant's original proposed constructions are unmoored from the intrinsic evidence. *Phillips*, 415 F.3d at 1316 ("the specification 'is always highly relevant to the claim construction analysis. Usually, it is dispositive; it is the single best guide to the meaning of a disputed term.'") (quoting *Vitronics Corp. v. Conceptronic, Inc.*, 90 F.3d 1576, 1582 (Fed. Cir. 1996)). Furthermore, including a technical word such as "state" that does not appear in the specification is unlikely to help a jury apply the construction. *Sulzer Textil A.G. v. Picanol N.V.*, 358 F.3d 1356, 1366 (Fed. Cir. 2004) ("The district court simply must give the jury guidance that can be understood and given effect by the jury once it resolves the issues of fact which are in dispute.").

Fifth, given that the claims and specification do not use the word "states," a POSITA would not necessarily understand that the "switching current" or "drive current" cause a state change or maintaining the steady state, respectively. Rather, a POSITA reading the claims and specification would understand that the claimed inventions are directed towards reducing power dissipation in wireless transceivers by changing the impedance, which reduces the "switching current" or "drive current." '330 Patent, Claim 1, Limitation [b] ("***reducing a switching current*** in the signal path ***by dynamically changing an impedance of a component*** in the signal path based on the first signal strength") (emphases added), Claim 23, Limitation [c] ("***wherein an impedance*** in the signal path ***is configured to be dynamically adjusted to reduce a switching current*** in response to the first

signal strength") (emphases added); '825 Patent, Claim 8, Limitation [d(ii)] ("***an impedance of the one or more of the plurality of circuits*** in the receiver signal path of the wireless transceiver to ***be increased, thereby causing a drive current of the one or more of the plurality of circuits to be decreased***.") (emphases added); '210 Patent, Claim 8, Limitation [d] ("***an impedance*** affecting the receiver signal path ***is dynamically increased***, raising the noise floor and ***causing one or more drive currents to be reduced***, thereby reducing power consumption.") (emphases added); *see also* '330 Patent at Abstract ("Methods and circuits ***for reducing power dissipation in wireless transceivers*** and other electronic circuits and systems. ***Embodiments of the present invention use*** bias current reduction, ***impedance scaling***, and gain changes either separately or in combination to reduce power dissipation.") (emphases added); '825 Patent at Abstract (same); '210 Patent at Abstract (same). In other words, a POSITA reading the claims and specification would understand that the claimed inventions are silent about whether a state changes or is maintained, with respect to the "switching current" and "drive current."

Despite this complete silence, Defendant's alternate proposed construction for "switching current" ("current required to change the state of a transistor/system") and Defendant's original proposed construction for "drive current" ("current required to keep a transistor/system at a steady state") require that the claimed currents change or maintain the state, respectively. If limiting a claim term to a disclosed embodiment is improper, then limiting a claim term to a non-existent embodiment as Defendant's alternate proposed construction for "switching current" and Defendant's original proposed construction for "drive current" is also improper.

Sixth, with respect to "switching current," Defendant's primary proposed construction ("the current that carries a signal through a load") does not appear have legally sufficient evidence. More specifically, Defendant's alternate proposed construction ("or, if plain and ordinary

meaning, 'current required to change the state of a transistor/system'") implies that Defendant's primary proposed construction ("the current that carries a signal through a load") is not the plain-and-ordinary meaning. But the only two exceptions to plain-and-ordinary to plain-and-ordinary meaning are lexicography and disclaimer. *Thorner*, 669 F.3d at 1365. Defendant does not explicitly or implicitly argue lexicography or disclaimer. As such, Defendant's primary proposed construction for "switching current" fails to meet the "exacting" standard required for lexicography or disclaimer. *Hill-Rom Servs.*, 755 F.3d at 1371 ("The standards for finding lexicography and disavowal are exacting.").

Seventh, the difference between and timing of the two alternatives for Defendant's proposed construction for "drive current' tends to indicate that at least one alternative is not correct—if not both alternatives. The fact that Defendant provides two very different alternatives for the plain-and-ordinary meaning of this term undermines Defendant's proposed constructions. More specifically, in his Opening declaration, Defendant's expert appears to imply that plain-and-ordinary meaning is the correct construction for "drive current." *See* Opening, Ex. 1 at ¶¶ 35 ("I agree that [Defendant's] constructions provide accurate descriptions of the plain and ordinary meaning of these terms"), 36 ("First, as the plain language of the terms suggests, a person of skill in the art would understand that a 'switching current' is the 'current required to change the state of a transistor/system' while a 'drive current' is the 'current required to keep a transistor/system at a steady state.'"), 38 ("As to 'drive current,' the plain and ordinary meaning proposed by [Defendant] is consistent with how 'drive current' appears in the claims and the specification."). Regardless, Defendant's expert repeatedly opines that Defendant's original proposed construction for "drive current" ("current required to keep a transistor/system at a steady state") accurately describes the plain-and-ordinary meaning. *See* Opening, Ex. 1 at ¶¶ 35 ("I agree that [Defendant's]

constructions provide accurate descriptions of the plain and ordinary meaning of these terms."), 38 ("As to 'drive current'" the plain and ordinary meaning proposed by [Defendant] is consistent with how 'drive current' appears in the claims and the specification.").

Yet, in its reply brief, Defendant expands the alleged plain-and-ordinary meaning from "current required to keep a transistor/system at a steady state" to include a very different limitation "the current that carries a signal through a load." The fact that Defendant's expert opined that the plain-and-ordinary meaning was the former while Defendant later assert that the plain-and-ordinary meaning was both the former and latter indicate that Defendant does not even believe that its own expert provided an accurate opinion. The fact that Defendant's expert did not provide a follow-up or amended expert declaration further confirms that Defendant and its expert do not agree that the plain-and-ordinary meaning of "drive current" includes "the current that carries a signal through a load."

The two alternatives are very different. The first alternative ("current required to keep a transistor/system at a steady state") ignores the "signal" and "load' in the second alternative while the second alternative ("the current that carries a signal through a load") ignores the "transistor/system" and "steady state" concepts in the first alternative. The only apparent commonality between the two is that both are directed towards "current." Given that these two alternatives are so different, one—or both—of them cannot be the plain-and-ordinary meaning. The Court explained above why the first alternative is incorrect. The fact that Defendant and its expert did not provide the second alternative in Defendant's opening brief indicates that the second alternative is not the plain-and-ordinary meaning either, or Defendant and its expert would have provided it in its opening brief. In addition, the fact Defendant's expert did not provide a follow-

up or amended expert declaration in support of Defendant's reply brief further confirms that he does not believe that the second alternative is the plain-and-ordinary meaning.

Eighth, with respect to the first alternative in Defendant's proposed construction of "drive current," Defendant argues that the "claims and specification of the Asserted Patents indicate that a 'drive current' can change based on adjustments to an impedance in a circuit" and that the "intrinsic evidence from the Asserted Patent claims and specification supports [Defendant's] construction." Opening at 12. But claims and specification do not support Defendant's first alternative ("current required to keep a transistor/system at a steady state"). Rather, the claims and specification merely describe that the "drive current" changes based on changes to an impedance in the circuit, which is an entirely unremarkable proposition. But it does not follow that changes in the "drive current" due to changes in the impedance in a circuit necessarily means that "drive current" is the "current required to keep a transistor/system at a steady state." At best, Defendant is missing linking arguments between the intrinsic evidence and the first alternative (which the Court does not believe exist); at worst, there is no relationship between the intrinsic evidence and the first alternative.

Ninth, with respect to Defendant's arguments about the prosecution history, the Court disagrees that Applicant's statements support Defendant's alternate proposed construction for "switching current" ("current required to change the state of a transistor/system). More specifically, during prosecution, Applicant argued that "a switching current is a dynamic or transient current that occurs during voltage transitions." Opening, Ex. 10 at 8. In other words, Applicant argued that a "switching current" is the result of "voltage transitions," and not that "voltage transitions" are the result of a "switching current." But Defendant's alternate construction

incorrectly assumes the latter, namely, that a "switching current" changes the state (*e.g.*, voltage) of a transistor or system.

In short, rather than being "highly similar" to Plaintiff's description of "switching current" during prosecution, Defendant's alternate proposed construction is unmoored from the prosecution history. As such, the prosecution history does not support Defendant's alternate proposed construction for "switching current."

Therefore, for the reasons described above, the Court finds that the term should be construed according to its plain-and-ordinary meaning.

D. Term #4: "dynamically [adjusting/adjusted/adjust/ changing/decreased/ increasing/increased/reducing/reduced/ varying/vary]"

Term	Plaintiff's Proposed Construction	Defendant's Proposed Construction
#4: "dynamically [adjusting/adjusted/adjust/ changing/decreased/ increasing/increased/reducing /reduced/ varying/vary]" U.S. Patent No. 7,010,330, Claims 1, 23, 29; U.S. Patent No. 10,524,202, Claims 7–9, 11, 13; U.S. Patent No. 11,564,164, Claims 5, 7, 8, 20; U.S. Patent No. 11,638,210, Claims 3, 6, 10	Plain and ordinary meaning, wherein the plain and ordinary meaning is: "adjusting during operation based, at least in part, on information gained during operation"	"adjusting / changing / increasing / reducing / varying during operation without reliance on a signal strength threshold"

<u>The Parties' Positions:</u>

The Court previously construed this term as "plain-and-ordinary meaning, wherein the plain-and-ordinary meaning is 'adjusting during operation based—at least in part—on information gained during operation" *Samsung*, No. 6:20-cv-00160, ECF No. 57 at 2 (W.D. Tex. Jan. 7, 2021).

Defendant contends that Plaintiff "has repeatedly and unmistakably disclaimed any claim scope that would allow the 'dynamically' terms to cover systems that rely on signal thresholds." Opening at 14. Defendant contends that, by contrast, Plaintiff has "no intrinsic support to point to in support of a scope of the Asserted Claims that could include signal strength threshold-based systems." *Id.* at 15. Defendant contends that, for example, "the word 'threshold' does not appear in *any* of the Asserted Patent specifications or claims." *Id.* (emphasis in Defendant's brief). Defendant contends that the "only intrinsic evidence available as to whether the 'dynamically' terms cover signal strength threshold-based approaches is in the prosecution history of the Asserted Patents." *Id.*

Defendant contends that during prosecution Applicant "repeatedly represented that the term 'dynamically' cannot be satisfied by a system that relies on a signal strength threshold." *Id.* More specifically, during prosecution of U.S. Patent No. 9,331,728, which is related to all Asserted Patents, Defendant contends that Applicant repeatedly distinguished "dynamic" from "threshold-based prior art." *Id.* (citing *Traxcell Techs., LLC v. Nokia Sols. and Networks Oy*, 15 F.4th 1136, 1141 (Fed. Cir. 2021)). As a first example, Defendant contends that Applicant argued that the Clark prior art reference "teaches an on/off solution that is based on a threshold and therefore Clark does not dynamically respond but rather responds when a threshold is crossed. In other words, Clark does not teach a continuous behavior, commonly characterized as dynamic" and that "Clark teaches away from dynamically changing and has a merely on/off implementation that is based on a predetermined threshold[.]" *Id.* (quoting Opening, Ex. 10 at 11, 10). Defendant contends that Applicant argued, by contrast, that the claimed invention "uses no threshold; rather, the control adjusts dynamically the power dissipation as the received external signal's SNR varies as set forth in all independent claims in the case as now amended." *Id.* at 16.

Defendant further contends that during the Eastern District *Samsung* case, Plaintiff argued "'dynamically' as used by [Plaintiff] in this argument refers to making **adjustments without reliance on a threshold**." *Id.* at 18 (citing Opening, Ex. 12 at 1) (emphasis in Defendant's brief). Defendant contends that, based on that Plaintiff's statement in the Eastern District *Samsung* case and Applicant's prosecution statement, Judge Payne "properly construed 'dynamically adjust[ed]' in various claims of the '330 patent to mean 'adjust[ed] during operation without reliance upon a signal strength threshold.'" *Id.* (quoting Opening, Ex. 13 at 15).

Defendant contends that during prosecution of the '825 Patent, Applicant argued that the adjustment in the claimed invention is a "dynamic change, that is based on continuous monitoring of the interferer signal levels to optimize the changes in gain and impedance of the devices and circuits in the path of the RF signal[,]" while also arguing that "**Clark on the other hand uses threshold settings** as described in his specification and claims to switch between high gain levels and a [sic] low gain states to conserve power." *Id.* (citing Opening, Ex. 14 at 11) (emphasis in Defendant's brief).

Defendant contends that during prosecution of the '202 Patent, Applicant relied on Judge Payne's construction in distinguishing the Loke prior art reference. *Id.* at 18 (citing Opening, Ex. 15 at 14). Defendant contends that Applicant further argued that unlike the Loke prior art reference, "[e]mbodiments of the invention do not rely on such thresholds." *Id.* (citing Opening, Ex. 15 at 15–16). Similarly, Defendant contends that unlike the Clark prior art reference "[t]he presently pending claims do not rely on a comparison of the desired and undesired (interferer) signals to thresholds; instead, the method requires dynamically adjusting impedance or bias based on the relative comparison of the desired signal strength to the interferer signal strength." *Id.* at 19–20 (quoting Opening, Ex. 15 at 17–18).

Defendant contends that Plaintiff "should not be able to escape years of remarks narrowing the scope of the Asserted Claims[,]" so the Court should adopt Defendant's proposed construction.

In its response, Plaintiff contends that these terms should be construed the same way that this Court previously construed them in *Theta v. Samsung*. Response at 14 (citing No. 6:20-cv-00160-ADA, ECF No. 57 at 23 (W.D. Tex. Jan. 7, 2021)). Plaintiff contends that this Court, in coming to its final construction, rejected Samsung's disclaimer arguments, which Defendant "resurrects" here, and any negative limitation about thresholds. *Id.* at 14–15. Plaintiff contends that "[t]o rule differently here, on the same arguments re-raised by a different party, would frustrate [Plaintiff's] subsequent reliance and create inconsistency and injustice." *Id.* at 14.

Plaintiff contends that Judge Payne concluded that there was no prosecution disclaimer as the prosecution statements were subject to multiple reasonable interpretations. *Id.* at 14 (citing Opening, Ex. 13 at 13–14). Plaintiff contends that Judge Payne understood the statements from the prosecution of the '728 Patent "to distinguish a static 'signal quality' threshold in the prior art from 'dynamic adjustments based on signal strength ratios' in the '728 Patent claims." *Id.* at 15 (citing Opening, Ex. 13 at 12). Plaintiff contends that Judge Payne's "without reliance on" construction was based on a disclaimer, but was from an argument made by Plaintiff's former counsel during the Eastern District litigation, and not one made during prosecution. *Id.* Plaintiff finally contends that Judge Payne declined to apply any alleged disclaimer from the prosecution of the '728 Patent to the '330 Patent. *Id.*at 14.

With respect to the alleged disclaimer in the '728 Patent, Plaintiff contends that the "no thresholds" prosecution statement was limited to the independent claims of the '728 Patent and does not apply to other Asserted Claims because the independent claims of the '728 Patent comparing two different signal strengths against each other rather than comparing one signal

strength against a static predetermined threshold. *Id.* Plaintiff contends that "the 'no thresholds' comment is confined to that specific context and claim language." *Id.*

With respect to the alleged disclaimer during the prosecution of the '825 Patent, Plaintiff contends that "the distinction between Clark's two simple high-gain and low-gain states and the '825 Patent 'continuous monitoring of the interferer signal levels to optimize' settings does not turn on, or rule out, use of thresholds in that monitoring." *Id.* at 16 (citing Opening, Ex. 11 at 18). Plaintiff further contends that "it is not a disclaimer to point out that the language of a construction—applied by the Court against patentee's wishes—is not present in the prior art." *Id.* (citing Opening, Ex. 11 at 18–19).

With respect to the alleged disclaimer during the prosecution of the '825 Patent, Plaintiff contends that "the distinctions made between specific claim language of the '202 Patent and the specific 'false alarm' threshold of the Loke reference are neither a generalized disclaimer of all thresholds nor applicable outside the context of those specific claims." *Id.* (citing Opening, Ex. 11 at 19–20).

Plaintiff summarizes that Defendant "presents no justification for applying a negative 'without reliance on thresholds' construction to any Asserted Patent—much less across all five asserted here." *Id.*

In its reply, Defendant contends that this term has been construed twice and that its proposed construction uses Judge Payne's construction in the Eastern District *Samsung* case, while Plaintiff uses this Court's construction in the Western District *Samsung* case. Reply at 8. Defendant contends that Plaintiff's "repeated statements during both prosecution and prior litigation of patents from the same patent family demonstrate that the 'dynamically [varying]' terms in the Asserted Patents do not relate to reliance on a signal strength threshold." *Id.* at 9.

With respect to Plaintiff's argument that Applicant's statements "did not apply to the inventions generally or to the different Asserted Claims of other patents here[,]" Defendant contends that during the prosecution of the '728 Patent, a child of the '330 Patent, Applicant described that "Tsividis uses no threshold," *i.e.*, the invention generally does not use a threshold, and not that the claims do not use a threshold. *Id.* (citing cases). In addition, Defendant contends that the same claim language "dynamically" is present in all Asserted Patents, and not only in select claims. *Id.* at 10. Defendant contends that, as such, when Plaintiff argued that a prior art reference "teaches away from dynamically changing and has a merely on/off implementation that is based on predetermined thresholds," Plaintiff disclaimed the use of thresholds. *Id.* (quoting Opening, Ex. 11 at 10).

With respect to the alleged disclaimer made by Plaintiff's former counsel, Defendant contends that Plaintiff argued that "'dynamically … refers to making adjustments without reliance on a threshold" and that the public is entitled to rely on that representation. *Id.* (quoting Opening, Ex. 12 at 1). Defendant contends that Plaintiff's later reliance on the same construction during prosecution of the '825 and '202 Patents only confirms Plaintiff's intent to adopt that disclaimer. *Id.* at 10–11 (citing Opening, Ex. 14 at 11; Ex. 15 at 15–16, 17–18). Defendant contends that Plaintiff "cannot seek the benefit of the constructing during prosecution and then distance itself from the same construction during litigation." *Id.* at 11 (citing *Aylus*, 856 F.3d at 1360).

With respect to Plaintiff's argument that Applicant's statements are not applicable to other patents, Defendant contends that "at the very least this is an acknowledgment that disclaimer must apply for at least asserted claims 7, 11 and 13 of the '202 patent." *Id.*

In its sur-reply, Plaintiff contends that the Court previously concluded that there was no disclaimer and because Defendant fails to provide any new arguments, the Court should adopt its prior construction. Sur-Reply at 8.

Plaintiff contends that Defendant "largely ignores [Plaintiff's] Response and re-asserts, without support or a reasonable basis to believe, that an argument made during prosecution of an unasserted patent should be taken to refer to (and disclaim) every use of every signal strength threshold in every claim in this patent family." *Id.* Plaintiff contends that, however, a "lone 'uses no threshold' statement cannot be divorced from its context, and its context makes clear that it was never a generalizable disclaimer." *Id.* Plaintiff contends that Judge Payne and this Court both concluded that there was no disclaimer. *Id.* (citing Response at 14–15).

Plaintiff contends that there is no such thing as "the invention generally" as each claim is its own invention. *Id.* Plaintiff contends that Defendant has not provided any reason to "convert the context-specific use of the word 'threshold' in a proposed claim amendment into a generalized limitation excluding all thresholds regardless of meaning and context." *Id.* at 8–9.

Plaintiff contends that the "cited statements during prosecution of the unasserted '728 patent were made to distinguish the specific Clark reference from the specific claims as amended there." *Id.* at 9. More specifically, Plaintiff contends that the Clark prior art reference discloses using a static threshold value to determine whether high or low current mode should be used while the '728 Patent uses a "'ratio,' acting on determination of 'strength of the desired signal' relative to 'strength of the interferer signal.'" *Id.* (citing Opening, Ex. 11 at 3, 9). Plaintiff contends that the difference between the two is that the Clark prior art reference involved a "comparison to a static value—'a merely on/off implementation that is based on a predetermined threshold,'" while the '728 Patent compares two different signals. *Id.* (citing Opening, Ex. 11 at 3, 11, 9).

Plaintiff contends that "[t]he argument during prosecution of the '728 Patent was only about what was being employed in the claims then at issue, as then amended—not about the concept of a threshold writ large." *Id.* Plaintiff contends that when read in context, the phrase "uses no threshold" "refers to the specific implementation of Clark distinguished from, and the specific claims at issue there[.]" *Id.* Plaintiff contends that this phrase could have been more precisely written as "uses no static threshold[,]" but that lack of precision still does not rise to the level of a "clear and unmistakable" disclaimer. *Id.* (citing cases).

Plaintiff contends that the statements that Defendant "cites here cannot reasonably be read in context to refer to a global disclaimer of anything and everything that might be deemed a threshold." *Id.* at 10. As an example, Plaintiff contends that Defendant has not shown that there was a disclaimer of use of a "dynamic threshold." *Id.*

With respect to Applicant's statement that the prior art reference "teaches away from dynamically changing and has a merely on/off implementation that is based on predetermined thresholds," Plaintiff contends that Defendant "conflates two distinctions, separated by 'and,' in a ploy to relate 'dynamically' to a supposed prohibition on thresholds." *Id.* Plaintiff contends that "[a] far less strained interpretation of the statements would be that, if anything, they compared 'dynamically changing' to an implementation with static or 'predetermined thresholds.'" *Id.* Plaintiff contends that whatever distinctions was being made were limited to the '728 Patent. *Id.* Furthermore, Plaintiff contends that "[i]t would be improper, unreasonable, and unfair to apply an alleged disclaimer from another patent prosecution to these claims, based on a distinction made there that is not even shown to apply to the presently asserted claims[,]" *e.g.*, the '728 Patent requires comparing two signal strengths while '330 Patent does not requiring measuring a second signal strength. *Id.*

With respect to the arguments made by Plaintiff's former counsel, Plaintiff contends that the only case Defendant cites in its reply brief "is about public reliance on statements ***to the Patent Office*** during prosecution, not former counsel arguments in a *Markman* brief." *Id.* (citing Reply at 10; *Data Engine Techs. LLC v. Google LLC*, 10 F.4th 1375, 1383 (Fed. Cir. 2021)) (emphasis in Plaintiff's brief). Plaintiff further contends that the public would not reasonably rely on an attorney's argument about a different patent with different claims, while ignoring "everything contrary that has happened publicly in litigation of the Asserted Patents since that time[,]" including this Court declining to limit the Asserted Claims. *Id.* at 10–11.

Plaintiff contends that the other statements that Defendant cites in its reply brief "are self-evidently not about excluding all varieties of threshold from claims—assuming again that one reads them in context[.]" *Id.* For example, Defendant quotes "Clark on the other hand uses threshold settings" in its reply brief, but Plaintiff contends that the full passage mentions that "Clark uses thresholds in a specific way, but the point of the discussion it is not about thresholds and their alternatives—nor could it reasonably be read as broad, patent-family covering disclaimer of anything." *Id.* at 11–12 (quoting Opening, Ex. 14 at 12–13).

With respect to the '202 Patent, Plaintiff contends that Defendant "fails to show that statements during prosecution of the '202 Patent warrant any finding of disclaimer, or more to the point here, justify any construction attached to the term 'dynamically.'" *Id.* at 12. Plaintiff contends that the passage containing the alleged disclaimer is "about the difference between comparing desired and interferer signals to thresholds, and comparing desired and interferer signals to each other." *Id.*

The Court's Analysis:

After reviewing the parties' arguments and considering the applicable law, the Court agrees with Plaintiff that this term should be construed according to its plain-and-ordinary meaning wherein the plain-and-ordinary meaning is "[adjusting / adjusted / adjust / changing / decreased / increasing / increased / reducing / reduced / varying / vary] during operation based, at least in part, on information gained during operation" for the reasons that follow. ***First***, the "heavy presumption" is that terms should be construed according to their plain-and-ordinary meaning. *Azure Networks*, 771 F.3d at 1347. ***Second***, Defendant does not allege lexicography, which is one of two exceptions to the general rule that a term should be construed as having its plain-and-ordinary meaning. *Thorner*, 669 F.3d at 1365.

Third, the Court concludes, as it did for the prior *Samsung* case, that the patentee did not disclaim reliance on a signal strength threshold. Defendant in this case did not appear to provide any new arguments that would justify adopting a different construction.

For background, "dynamically" and "threshold" are both commonly used engineering words, but are also very different concepts. The former is adjective that describes that the word that it is modifying occurs while the system is in operation or that it can change during system operation. *See, e.g.*, '330 Patent at 2:11–15. The opposite of "dynamically" is not "threshold," but rather "statically." "Statically" is an adjective that describes that the word that it is modifying does not change during system operation or that was predetermined prior to system operation. By contrast, "threshold" is simply a value or point that may be used as a criterion for some action. While "dynamically" and "threshold" are very different concepts, they are not the opposite of each other such that claiming, *e.g.*, a dynamic adjustment, does not necessarily mean that the adjustment is without reliance on a threshold. Rather, the two could be combined, *i.e.*, a dynamic threshold,

which simply means that the threshold could change during system operation. The parties do not appear to dispute this understanding of the meanings of "dynamic" and "threshold," *e.g.*, by presenting dictionary definitions with different meanings, but rather appear to agree with this understanding. *See, e.g.*, Opening at 18, Sur-Reply at 9–10. Furthermore, given that "dynamically" is an adjective and "threshold" is an noun, the Court believes that Applicant was not directly contrasting the two to disclaim reliance on a threshold. Therefore, based on this understanding, the Court concludes that a POSITA, as an initial matter, would not think that the term, *e.g.*, "dynamically adjusted," would necessarily require disclaiming the use of a threshold.

Defendant identifies several alleged disclaimers during the prosecutions of the '728, '825, and '202 Patents. The Court concludes that none of the statements meet the "exacting" standard required for disclaimer. *Hill-Rom Servs.*, 755 F.3d at 1371 ("The standards for finding lexicography and disavowal are exacting."). For the '728 Patent, Defendant identifies the following statements as disclaimers:

1. "Also, Column 2, Line 7 discusses a 'threshold' which is always necessary in any so called 'two-level' system … By contrast, Tsividis uses no threshold; rather, the control adjusts dynamically the power dissipation as the received external signal's SNR varies as set forth in all independent claims in the case as now amended." Opening, Ex. 11 at 8.
2. "Clark teaches away from dynamically changing and has a merely on/off implementation that is based on a predetermined threshold (see Clark col. 3 line 66 through col. 5 line 37, Table 1 and Fig. 2)." Opening, Ex. 11 at 10.
3. "Clark teaches an on/off solution that is based on a threshold and therefore Clark does not dynamically respond but rather responds when a threshold is crossed. In other words, Clark does not teach a continuous behavior, commonly characterized as dynamic[.]" Opening, Ex. 11 at 11.

Opening at 16–18; Reply at 9–10.

With respect to the first statement, the first portion cites to a specific column and line number in the Clark prior art reference. The full passage from Clark is as follows:

> Briefly, according to the invention, a receiver (or the receiving section of a transceiver) determines the signal quality of a desired signal, and the combined strength of all received signals (i.e., both desired and interfering signals). When the signal quality of the desired signal is low, and the combined signal strength of all received signals is high (indicating a strong interfering signal), the receiver is adapted to operate in a higher current mode, which minimizes intermodulation distortion. Conversely, when the quality of the desired signal is low and the combined strength of all received signals is also low, or when the quality of the desired signal is above a threshold, the receiver operates in a lower current mode to conserve power and maximize battery lifetime.

Clark (U.S. Patent No. 5,001,776) at 1:53–2:9. This passage describes that the threshold is used to determine, based on, *inter alia*, the signal quality of the desired signal whether the receiver operates in higher current mode or lower current mode. *Id.* There is no disclosure in this passage that the threshold ever changes value or can change.

The second portion describes that rather than disclosing an approach like Clark, the claimed invention in what issued as the ’728 Patent “adjusts dynamically the power dissipation as the received external signal’s SNR varies.” The Court concludes that this portion appears to contrast that the ’728 Patent uses a dynamic approach to adjust power dissipation rather than use a threshold that does not change to determine which current mode the receiver operates in (which could affect the power dissipation).

Furthermore, given that “dynamically” and “threshold” are unrelated concepts, the Court concludes that a POSITA would not understand that Applicant was directly comparing the two, but rather comparing the dynamic approach in the ’725 Patent versus a static or predetermined threshold approach in Clark. At minimum, the Court concludes that because this alternative explanation is a reasonable interpretation, the first statement does not meet the “clear and unmistakable” standard required for disclaimer. *3M Innovative Props.*, 725 F.3d at 1326 (when “an applicant’s statements are amenable to multiple reasonable interpretations, they cannot be deemed clear and unmistakable”).

Finally, with respect to whether the "Tsividis" in this statement refers to the entire patent family or only to the individual claims being discussed, the Court agrees with Plaintiff that it is the latter given that a bedrock principle of patent law is that each claim is its own invention. *Westwood Chem., Inc. v. United States*, 525 F.2d 1367, 1371 (Ct. Cl. 1975) ("Each claim of a patent is to be considered as setting forth a complete and independent invention."). As such, the Court concludes that Applicant's reference to "Tsividis" was not a reference to the entire patent family, but rather the instant application, and that Applicant chose to refer to the instant application as "Tsividis" to follow the same convention of referring to prior art by the first inventor's surname, *e.g.*, "Clark."

With respect to the second statement, the Court concludes that this statement more clearly describes that the difference between Clark and the claimed invention that would issue as the '725 Patent is that Clark uses a predetermined, *i.e.*, static, threshold, while the claimed invention uses dynamic adjustment. As such, Applicant was not disclaiming reliance on thresholds, but rather comparing the variable nature of dynamic adjustment versus the fixed nature of predetermined thresholds.

The Court concludes that the third statement is similar to the second. In the third statement, given that Applicant describes that "Clark teaches an on/off solution" and that "Clark does not teach a continuous behavior, commonly characterized as dynamic," the Court concludes that Applicant was contrasting fixed, single value threshold in Clark versus the variable, multiple value dynamic response in the claimed invention that would issue as the '725 Patent. As such, Applicant again was not disclaiming reliance on thresholds, but rather comparing the variable nature of dynamic adjustment versus the fixed nature of predetermined thresholds.

For the '825 Patent, Defendant only identifies that the statement that "Clark on the other hand uses threshold settings as described in his specification and claims to switch between high

gain levels and a [sic] low gain states to conserve power" is a disclaimer. Opening at 18 (quoting Opening, Ex. 14 at 11). This sentence is similar to the statements Defendant identified from the '728 Patent's prosecution. As such, Applicant again was not disclaiming reliance on thresholds, but rather contrasting fixed, predetermined thresholds with variable dynamic adjustments.

For the '202 Patent, Defendant identifies the following statements as disclaimers:

1. "Embodiments of the invention do not rely on such thresholds." Opening, Ex. 15 at 15–16.
2. "The presently pending claims do not rely on a comparison of the desired and undesired (interferer) signals to thresholds; instead, the method requires dynamically adjusting impedance or bias based on the relative comparison of the desired signal strength to the interferer signal strength." Opening, Ex. 15 at 17–18.

Opening at 18–20; Reply at 9–10.

With respect to the first statement, Applicant was referring to the "false alarm" threshold disclosed in the Loke prior art reference (U.S. Patent No. 6,311,048). But there is no disclosure in the Loke prior art reference that this threshold is anything but a static, predetermined threshold. *See* Loke at 3:52–64. Therefore, the Court concludes that Applicant again was not disclaiming reliance on thresholds, but rather contrasting fixed, predetermined thresholds with variable dynamic adjustments.

With respect to the second statement, this statement is similar to the statements Defendant identified from the prosecutions of the '725 and '202 Patents. Therefore, the Court concludes that Applicant again was not disclaiming reliance on thresholds, but rather contrasting fixed, predetermined thresholds with variable dynamic adjustments.

While Defendant argued that the prosecution statements contrast "dynamically" and "threshold" such that the patentee disclaimed reliance on thresholds, the Court disagrees that those statements meet "exacting" standard of "clear and unmistakable" disclaimer. *Hill-Rom Servs.*, 755

F.3d at 1371; *Genuine Enabling Tech.*, 29 F.4th at 1374. Furthermore, "because the prosecution history represents an ongoing negotiation between the PTO and the applicant, rather than the final product of that negotiation, it often lacks the clarity of the specification and thus is less useful for claim construction purposes." *Phillips*, 415 F.3d at 1317. Here, the Court concludes that all the alleged disclaimers attempt to compare "dynamic" approaches that are variable versus the use of a predetermined, fixed "threshold," which Applicant simply shorthanded the latter to "threshold."

It is important to note that Judge Payne also concluded, after carefully examining the prosecution history of the '725 Patent, that the patentee did not make a disclaimer. Opening, Ex. 13 at 14. Furthermore, Judge Payne makes some of the same conclusions as the Court did above. In particular, Judge Payne also concluded that the "patentee appears to have used 'dynamically' to refer to during operation." *Id.*

During the prosecution of the '202 Patent, Applicant argued that the Loke prior art reference did not disclose "dynamically adjust[ed]" as construed by Judge Payne. Opening, Ex. 15 at 14. But the Court concludes that Applicant did not adopt Judge Payne's constructions, nor did Applicant "clearly and unmistakably" disclaimer reliance on a threshold. Rather, Applicant appeared to only argue that, under Judge Payne's construction, the Loke prior art reference did not disclose "dynamically adjust[ed]." As such, this statement does not meet "exacting" standard of "clear and unmistakable" disclaimer. *Hill-Rom Servs.*, 755 F.3d at 1371; *Genuine Enabling Tech.*, 29 F.4th at 1374.

The Court declines to adopt Judge Payne's construction for "dynamically adjust[ed]" ("adjust[ed] during operation without reliance upon a signal strength threshold") and extend it to patents that were not at-issue in that case, *i.e.*, the '202, '564, and '210 Patents for at least two reasons. ***First***, the basis for Judge Payne's construction was a statement by Plaintiff's former

counsel. *Id.* at 8. But in light of the prosecution histories for multiple patents in this case, which did not "clearly and unmistakably" disclaim claim scope for the reasons explained above, Plaintiff's former counsel's statement conflicts with those prosecution statements. Because those statements were not provided to the PTO in the context of prosecution or to the PTAB in an IPR in order to gain issuance or maintain validity, respectively, conflict with all the prosecution statements identified in this case, and only occurred a single time, the Court declines to adopt that construction. Furthermore, the Court concludes that the statement by Plaintiff's former counsel contradicts the plain-and-ordinary meaning of "dynamically" and was neither the result of lexicography or disclaimer, nor does Defendant allege otherwise, so it is inappropriate to adopt that construction.

Second, the patents and claim term in the Eastern District litigation were different than the patents and claim terms in this case. The "dynamically" term only appeared in the '330 Patent in the Eastern District case, while it appears in three other patents other than the '330 Patent in this case, *i.e.*, '202, '164, and '210 Patents. Furthermore, the claim term in the Eastern District case was "dynamically adjust[ed]," while the claim terms in this case are "dynamically [adjusting / adjusted / adjust / changing / decreased / increasing / increased / reducing / reduced / varying / vary]." Because "dynamically adjust[ed]" is very different claim term than "dynamically changing / decreased / increasing / increased / reducing / reduced / varying / vary," even if the Court were inclined to adopt Judge Payne's construction for the '330 Patent, the Court would decline to do so for the '202, '164, and '210 Patents.

Finally, the Court does believe that it is helpful to provide a construction for "dynamically" to help the jury understand its meaning. As such, the Court adds "[adjusting / adjusted / adjust / changing / decreased / increasing / increased / reducing / reduced / varying / vary] during operation

based, at least in part, on information gained during operation" to its plain-and-ordinary meaning construction. The Court believes that this is the correct construction because "statically" is the opposite of "dynamically" and because some information is only available during operation (*i.e.*, "dynamically") and not prior to operation (*i.e.*, statically), adding "based … on information gained during operation" clarifies the distinction between "dynamically" and "statically." Furthermore, this clarification explains that "dynamically" occurs "during operation."

Therefore, for the reasons described above, the Court finds that the term should be construed according to its plain-and-ordinary meaning, wherein the plain and ordinary meaning is "[adjusting / adjusted / adjust / changing / decreased / increasing / increased / reducing / reduced / varying / vary] during operation based, at least in part, on information gained during operation."

B. Term #5A: "best-case"
Term #5B: "worst-case"

Term	Plaintiff's Proposed Construction	Defendant's Proposed Construction
#5A: "best-case" U.S. Patent No. 10,524,202, Claims 7-9; U.S. Patent No. 11,564,164, Claim 20	Plain and ordinary meaning	"desired signal strength is high and interferer signal strength is low"
#5B: "worst-case" U.S. Patent No. 10,129,825, Claims 3, 4, 8; U.S. Patent No. 10,524,202, Claims 7–11; U.S. Patent No. 11,564,164, Claims 5, 7–9, 20	Plain and ordinary meaning	"desired signal strength is low and interferer signal strength is high"

<u>The Parties' Positions:</u>

The Court previously construed this term as "not indefinite, plain-and-ordinary meaning." *Samsung*, No. 6:20-cv-00160, ECF No. 57 at 4 (W.D. Tex. Jan. 7, 2021).

Defendant contends that its proposed construction is correct because "[m]ost of the time these terms appear in the claims of the Asserted Patents, they are explicitly defined by the claim language itself." Opening at 20–21 (citing '202 Patent, Claim 7). Defendant contends that, for example, Claim 20 of the '164 Patent recites that "a worst-case condition when a strength of the desired signal is low and a strength of the interferer signal is high, and a best-case condition when the strength of the desired signal is high and the strength of the interferer signal is low," while Claim 3 of the '825 Patent recites "a worst-case power dissipation condition from the battery results when the signal strength of the desired signal is low and the signal strength of the interferer signal is high[.]" *Id.*at 21 (also citing '202 Patent, Claims 1, 5, 7, 11, 12, 14, 16, 18, 19, 22; '164 Patent, Claim 5, '825 Patent, Claims 1, 5, 7, 8; '210 Patent, Claims 6, 10).

Defendant contends that the specification describes that "the input spectrum in FIG. 2A is that of the best-case input signal, specifically, a robust desired signal accompanied by no or low-level interferers" and that Figure 9B depicts "a best-case received signal," where "the desired signal 936 is strong, while the interfering signals 937 and 938 are relatively weak[.]" *Id.* at 22 (quoting '202 Patent at 6:16–18, 9:47–50). Defendant contends that specification describes that "the worst-case condition … is when a weak desired signal 306 is accompanied by large interferers 310 and 312." *Id.* (quoting '202 Patent at 6:33–36; also citing '202 Patent at 1:36–42, 6:8–12, 10:42–49).

Defendant contends that "[i]n the small handful of cases where these terms appear without explicit definition in the claim language, they are entitled to the same scope and definition, because such is the only claim scope supported by the intrinsic evidence." *Id.* at 21 (citing '202 Patent, Claim 7; *Indacon, Inc. v. Facebook, Inc.*, 824 F.3d 1352, 1357 (Fed. Cir. 2016)). Defendant contends that the Court should reject Plaintiff's plain-and-ordinary meaning construction as

"[d]eclining to construe vague terms like "best" and "worst" is likely to cause confusion for the jury." *Id.* at 22 Defendant further contends that "[s]ince these terms have potentially subjective meanings, they pose a risk that the jury might have trouble limiting their meanings to the context of the Asserted Patents." *Id.* (citing *U.S. Surgical Corp. v. Ethicon, Inc.*, 103 F.3d 1554, 1568 (Fed. Cir. 1997)).

In its response, Plaintiff contends that the "meaning of these terms is readily apparent to one of ordinary skill in the art reading the claims in context of the specification, which discuss and show examples at length." Response at 16 (citing '330 Patent at 1:33–37, 6:3–13, Figure 2, 6:28–46, Figure 3, 11:14–20; Figure 11). For example, Plaintiff contends that the specifications describe that Figures 2B and 3 depict the worst-case, namely, "where the desired signal is lower relative to the interferers that are present." *Id.* at 16–17.

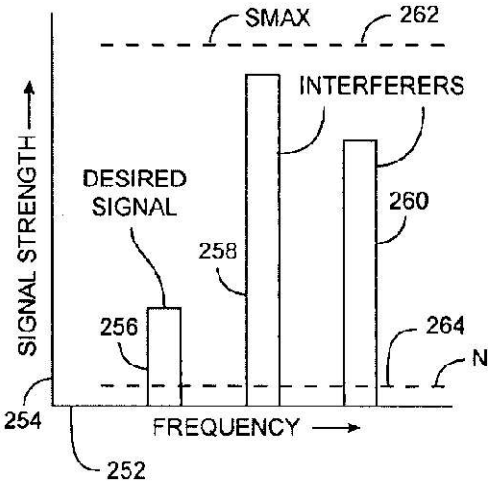

FIG. 2B

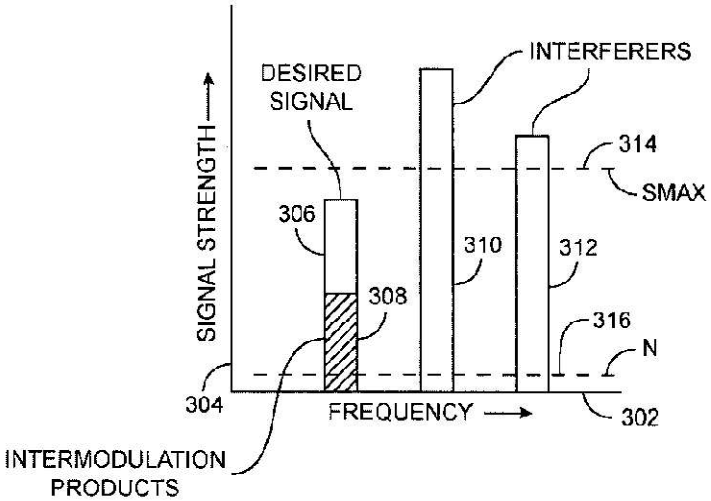

FIG. 3

Plaintiff contends that this Court previously construed this term as plain-and-ordinary meaning after deciding it was not indefinite in the *Samsung* case. *Id.* at 17. Plaintiff contends that

it proposed constructions similar to what Defendant proposes now, but that they are "not needed here." *Id.*

Plaintiff contends that there is no need to adopt a construction as the dispute is not ripe from an *O2 Micro* perspective. *Id.* at 18 (citing cases).

In its reply, Defendant contends that its opening brief explained why its proposed construction is "consistent with the explicit definition found in many claims and explained why that construction applies to all claims." Reply at 12.

Defendant contends that Plaintiff does not identify issues with Defendant's construction or disagree that it is consistent with the express definition provided in the claims. *Id.* Defendant contends that Plaintiff does not address whether the same construction applies to the claims that do not expressly define the meaning of these terms. *Id.* at 12–13. Defendant contends that:

> [Plaintiff] should not be permitted to escape explicitly addressing this question by merely incanting "plain and ordinary meaning," because that fails to address whether [Plaintiff] believes (a) these terms have a plain and ordinary meaning that is broader than the express definition provided in certain claims (such as claim 7 of the '202 patent) and that only those claims are limited by their express language, or (b) the plain and ordinary meaning is the same across all claims and is consistent with the express definition provided in certain claims (such as claim 7 of the '202 patent).

Id. at 13. (citing *O2 Micro*, 521 F.3d at 1361).

In its sur-reply, with respect to Defendant's argument that Plaintiff does not take a position on the construction of these terms, Plaintiff contends that its position is that no construction is necessary. Sur-Reply at 12–13 (citing cases). Plaintiff contends that the Court previously made the same conclusion in the prior *Samsung* case. *Id.* at 13.

Plaintiff contends that Defendant's proposed construction are unnecessary "and so should not be adopted—even if they are not obviously incorrect." *Id.*

The Court's Analysis:

After reviewing the parties' arguments and considering the applicable law, the Court agrees with Plaintiff that this term should be construed according to its plain-and-ordinary meaning for the reasons that follow. ***First***, the "heavy presumption" is that terms should be construed according to their plain-and-ordinary meaning. *Azure Networks*, 771 F.3d at 1347. ***Second***, Defendant does not allege lexicography or disclaimer, which are the only two exceptions to the general rule that a term should be construed as having its plain-and-ordinary meaning. *Thorner*, 669 F.3d at 1365.

Third, with respect to Defendant's argument that the claim expressly define the meaning of the terms, the Court believes that it is unnecessary to construe a term when the claim expressly defines the meaning because that would be an "obligatory exercise in redundancy." *U.S. Surgical*, 103 F.3d at 1568. Furthermore, by construing the claim terms to have the same meaning as other claim language, this would improperly render some of the claim language to be surplusage. *Generation II Orthotics*, 263 F.3d at 1365 (a claim construction must not "revise or ignore the explicit language of the claims").

Fourth, the Court previously construed this term as not indefinite, plain-and-ordinary meaning. *Samsung*, No. 6:20-cv-00160-ADA, ECF No. 57 at 4 (W.D. Tex. Jan 7, 2021); ECF No. 266 at 5:12–42:25, 43:2–4.

Therefore, for the reasons described above, the Court finds that the term should be construed according to its plain-and-ordinary meaning.

V. CONCLUSION

In conclusion, for the reasons described herein, the Court adopts the below constructions as its final constructions.

SIGNED this 2nd day of July, 2025.

ALAN D ALBRIGHT
UNITED STATES DISTRICT JUDGE

Term	Plaintiff's Proposed Construction	Defendants' Proposed Construction	Court's Final Construction
#1 "signal path" U.S. Patent No. 7,010,330, Claims 1, 23, 29; U.S. Patent No. 10,129,825, Claims 3, 4, 8; U.S. Patent No. 10,524,202, Claims 7–11, 13; U.S. Patent No. 11,564,164, Claims 5, 7–9, 20; U.S. Patent No. 11,638,210, Claims 3, 6, 10	Plain and ordinary meaning	"path for analog signal"	Plain-and-ordinary meaning
#2: "impedance" U.S. Patent No. 7,010,330, Claims 1, 23, 29; U.S. Patent No. 10,129,825, Claims 4, 8; U.S. Patent No. 10,524,202, Claims 7, 8; U.S. Patent No. 11,564,164, Claim 7; U.S. Patent No. 11,638,210, Claims 3, 10	Plain and ordinary meaning, but if construed, should be construed as "opposition to the flow of alternating current"	Plain and ordinary meaning	Plain-and-ordinary meaning
#3A: "switching current" U.S. Patent No. 7,010,330, Claims 1, 23	Plain and ordinary meaning	"the current that carries a signal through a load" Or, if plain and ordinary meaning, "current required to change the state of a transistor/system"	Plain-and-ordinary meaning

Term	Plaintiff's Proposed Construction	Defendants' Proposed Construction	Court's Final Construction
#3B: "drive current" U.S. Patent No. 10,129,825, Claim 8; U.S. Patent No. 11,638,210, Claim 10	Plain and ordinary meaning	Plain and ordinary meaning, which is "current required to keep a transistor/system at a steady state" or "the current that carries a signal through a load"	Plain-and-ordinary meaning
#4: "dynamically [adjusting/adjusted/adjust/ changing/decreased/ increasing/increased/reducing/reduced/ varying/vary]" U.S. Patent No. 7,010,330, Claims 1, 23, 29; U.S. Patent No. 10,524,202, Claims 7–9, 11, 13; U.S. Patent No. 11,564,164, Claims 5, 7, 8, 20; U.S. Patent No. 11,638,210, Claims 3, 6, 10	Plain and ordinary meaning, wherein the plain and ordinary meaning is: "adjusting during operation based, at least in part, on information gained during operation"	"adjusting / changing / increasing / reducing / varying during operation without reliance on a signal strength threshold"	Plain and ordinary meaning, wherein the plain and ordinary meaning is "[adjusting / adjusted / adjust / changing / decreased / increasing / increased / reducing / reduced / varying / vary] during operation based, at least in part, on information gained during operation"
#5A: "best-case" U.S. Patent No. 10,524,202, Claims 7-9; U.S. Patent No. 11,564,164, Claim 20	Plain and ordinary meaning	"desired signal strength is high and interferer signal strength is low"	Plain-and-ordinary meaning

Term	Plaintiff's Proposed Construction	Defendants' Proposed Construction	Court's Final Construction
#5B: "worst-case" U.S. Patent No. 10,129,825, Claims 3, 4, 8; U.S. Patent No. 10,524,202, Claims 7–11; U.S. Patent No. 11,564,164, Claims 5, 7–9, 20	Plain and ordinary meaning	"desired signal strength is low and interferer signal strength is high"	Plain-and-ordinary meaning