US 20030126498A1

(19) United States

(12) Patent Application Publication (10) Pub. No.: US 2003/0126498 A1

Bigbee et al. (43) Pub. Date: Jul. 3, 2003

(54) METHOD AND APPARATUS FOR FUNCTIONAL REDUNDANCY CHECK MODE RECOVERY

(76) Inventors: **Bryant E. Bigbee**, Scottsdale, AZ (US); **Shivnandan Kaushik**, Portland, OR (US); **James B. Crossland**, Banks, OR (US)

Correspondence Address:
BLAKELY SOKOLOFF TAYLOR & ZAFMAN
12400 WILSHIRE BOULEVARD, SEVENTH FLOOR
LOS ANGELES, CA 90025 (US)

(21) Appl. No.: **10/038,323**

(22) Filed: **Jan. 2, 2002**

Publication Classification

(51) Int. Cl.[7] **G06F 11/00**

(52) U.S. Cl. **714/10**; 714/24

(57) **ABSTRACT**

A method and apparatus for functional redundancy check mode recovery is disclosed. A method in accordance with one embodiment includes detecting an event associated with a device within a data processing system, initiating a platform-independent device removal sequence for the device in response to detecting the event, virtually ejecting the device from the data processing system in response to initiating the platform-independent device removal sequence, and servicing the event associated with the device in response to virtually ejecting the device from the data processing system.

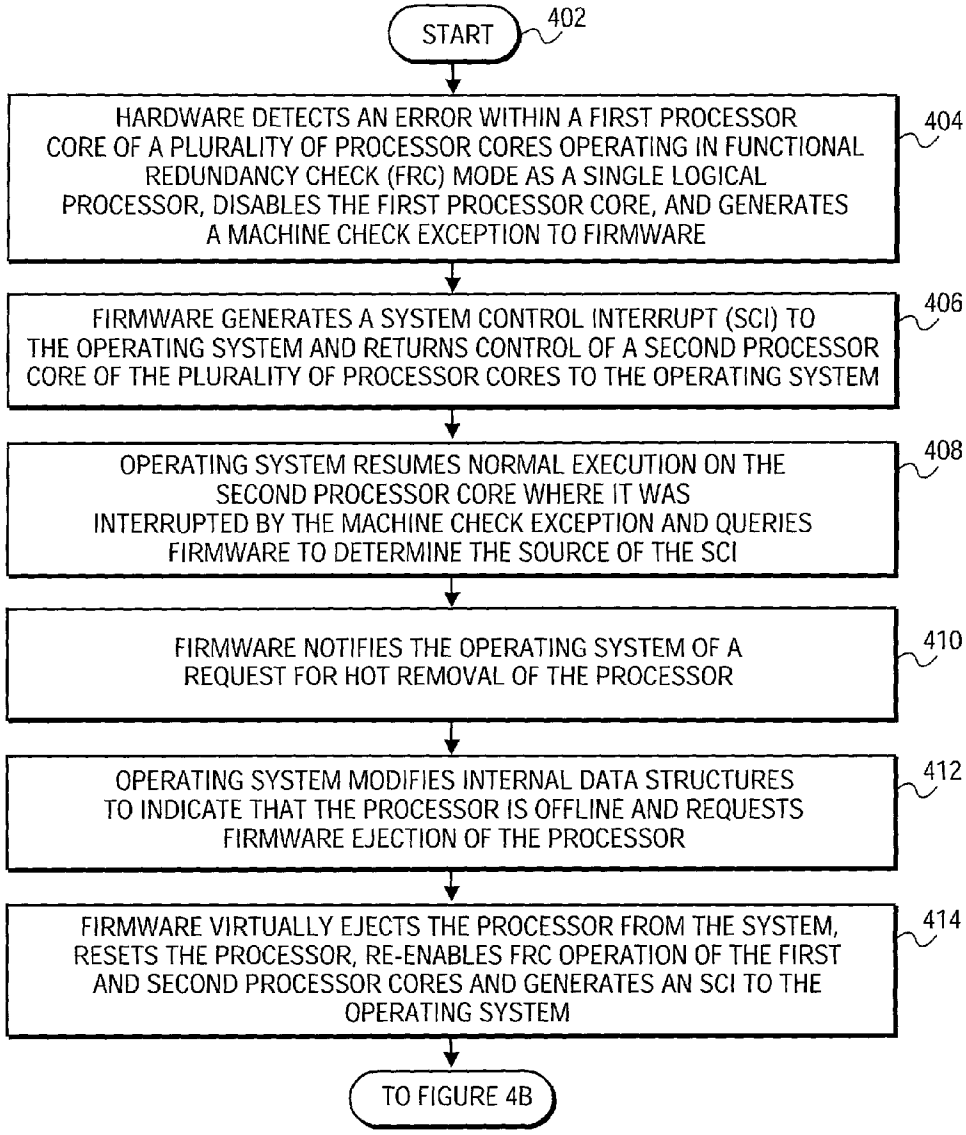

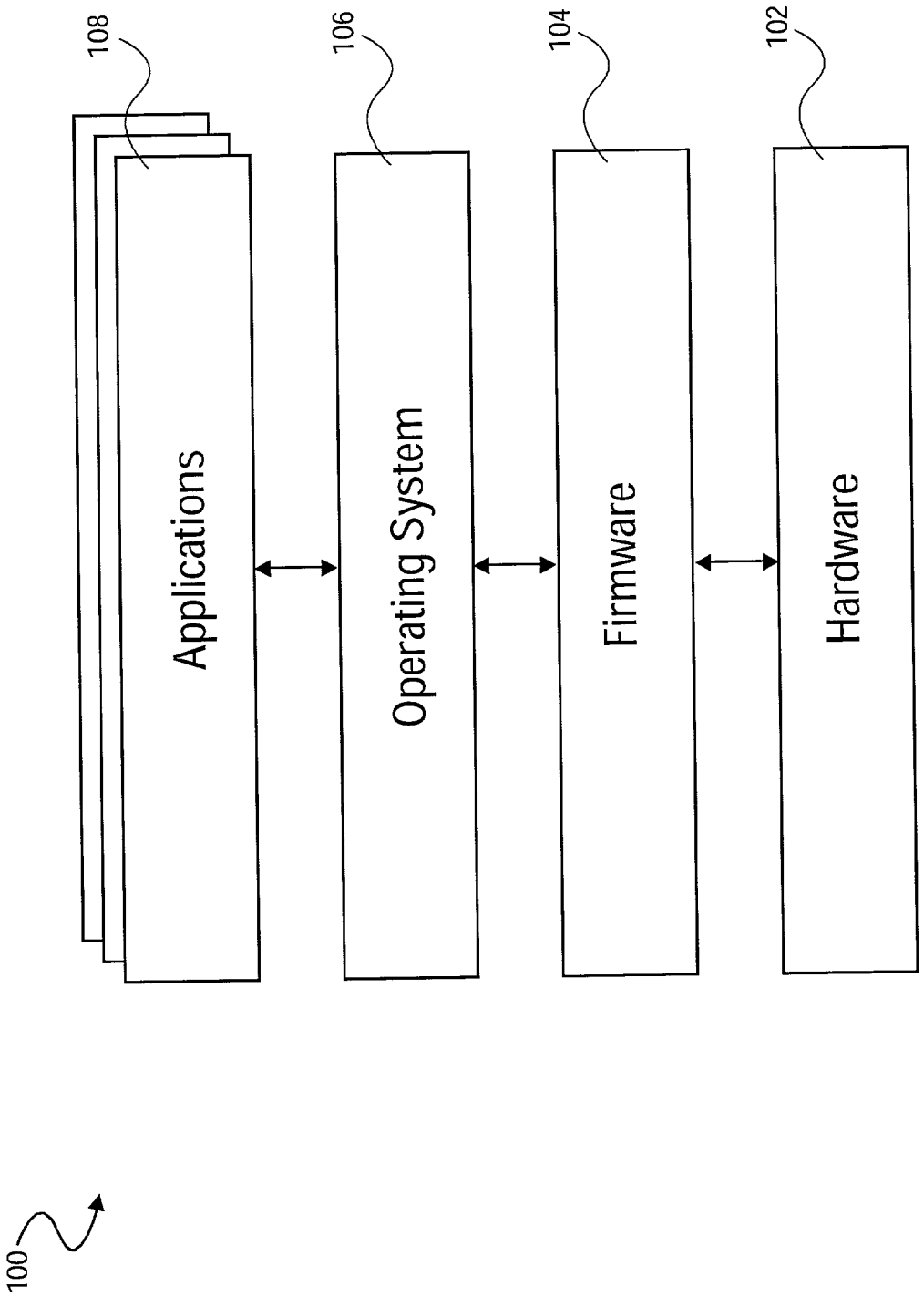
108
Applications
106
Operating System
104
Firmware
102
Hardware
100

FIG. 1

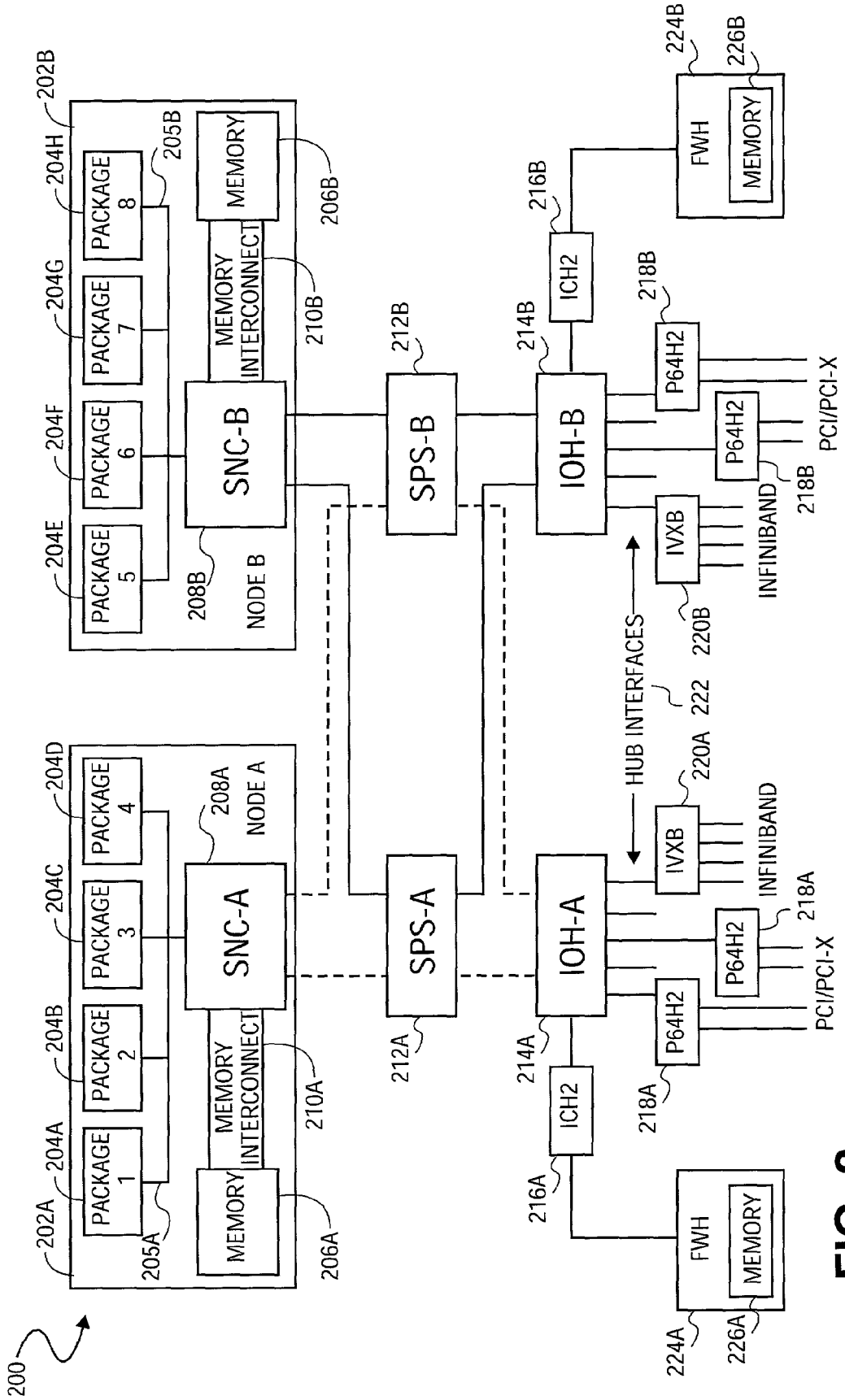
200
202A
202B
204A
204B
204C
204D
204E
204F
204G
204H
PACKAGE 1
PACKAGE 2
PACKAGE 3
PACKAGE 4
PACKAGE 5
PACKAGE 6
PACKAGE 7
PACKAGE 8
205A
205B
MEMORY
MEMORY INTERCONNECT
SNC-A
SNC-B
208A
208B
NODE A
NODE B
206A
206B
210A
210B
SPS-A
SPS-B
212A
212B
IOH-A
IOH-B
214A
214B
ICH2
216A
216B
FWH
MEMORY
224A
224B
226A
226B
P64H2
218A
218B
IVXB
220A
220B
INFINIBAND
PCI/PCI-X
HUB INTERFACES
222

FIG. 2

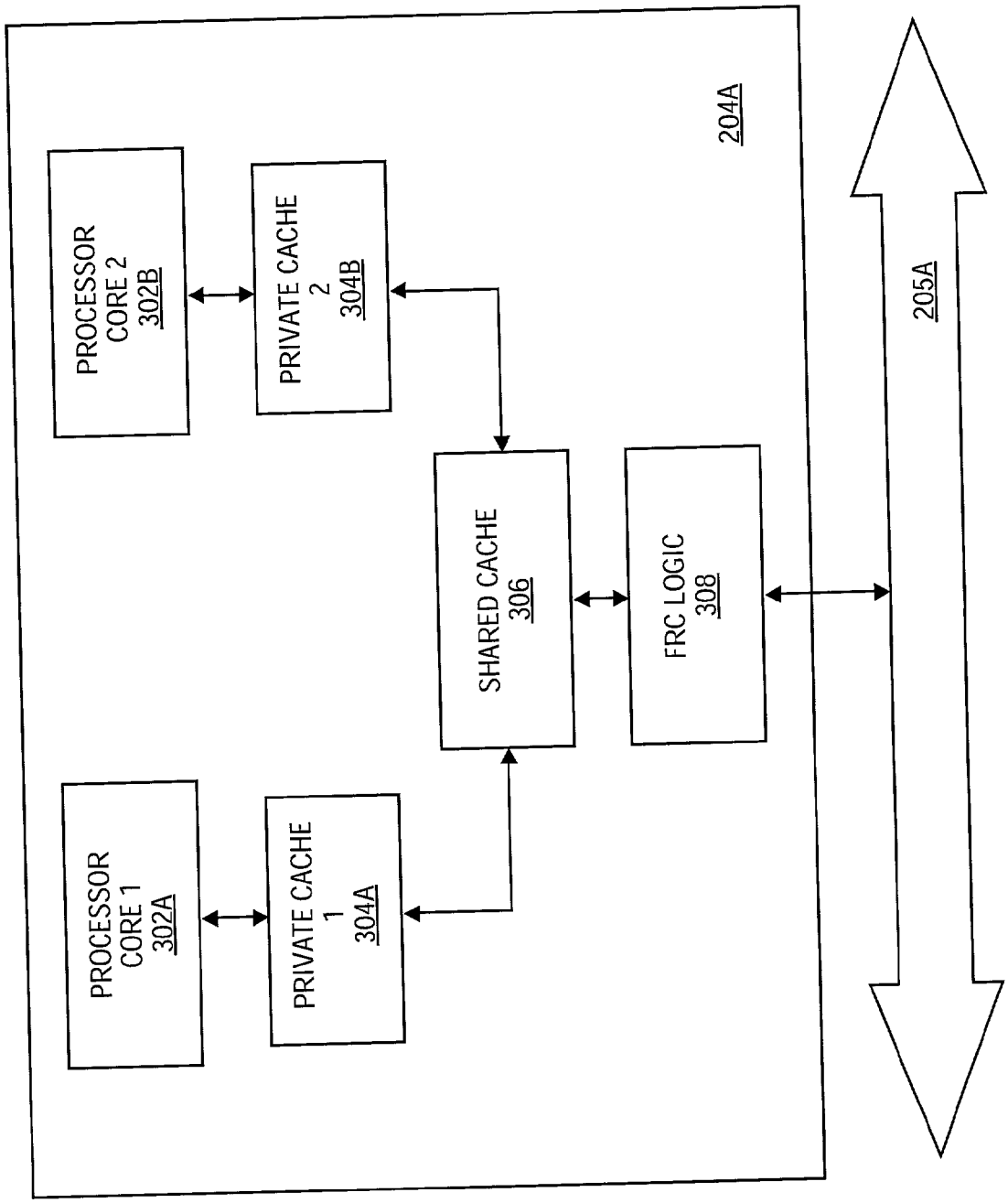
PROCESSOR CORE 1 302A
PRIVATE CACHE 1 304A
PROCESSOR CORE 2 302B
PRIVATE CACHE 2 304B
SHARED CACHE 306
FRC LOGIC 308
204A
205A

FIG. 3

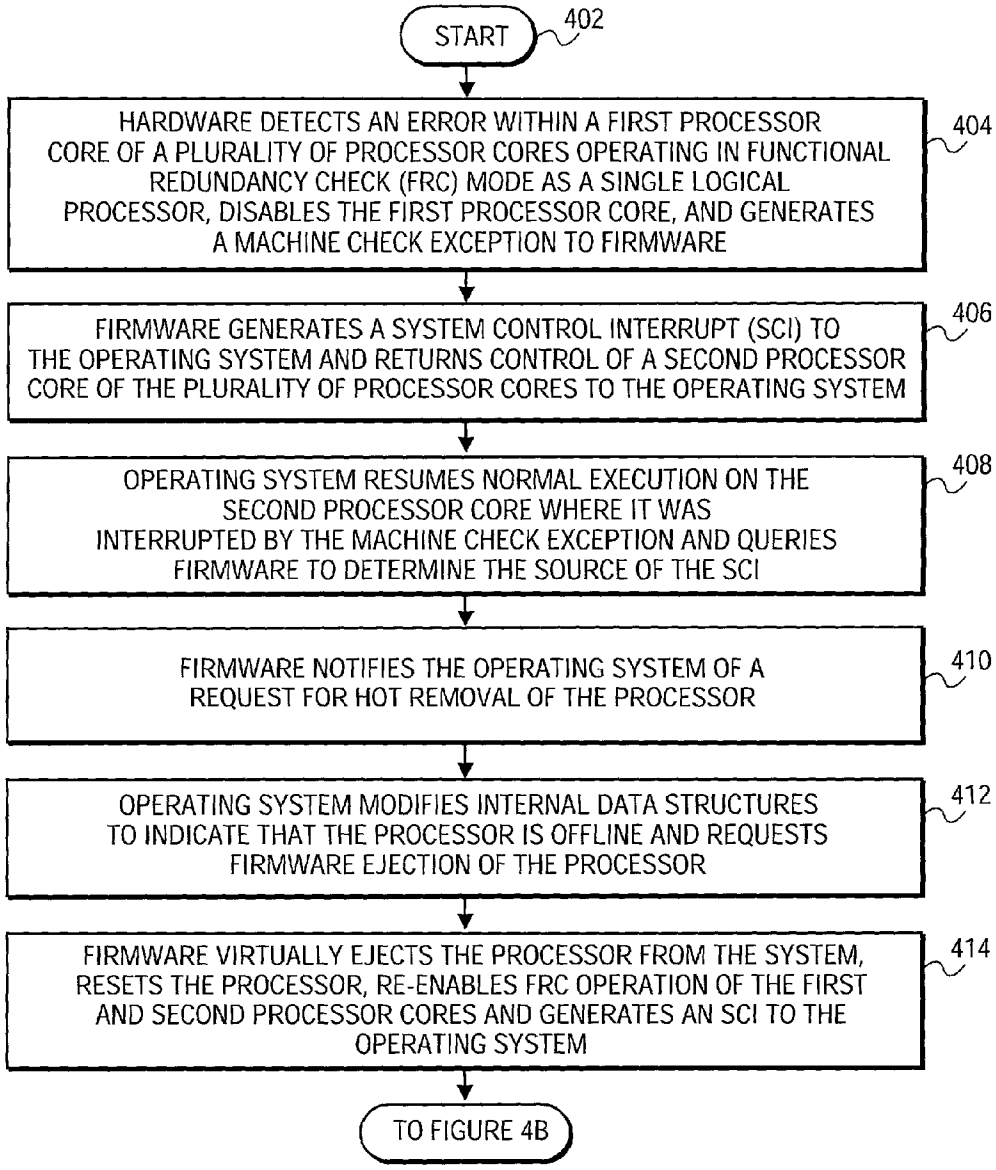
START
402
HARDWARE DETECTS AN ERROR WITHIN A FIRST PROCESSOR CORE OF A PLURALITY OF PROCESSOR CORES OPERATING IN FUNCTIONAL REDUNDANCY CHECK (FRC) MODE AS A SINGLE LOGICAL PROCESSOR, DISABLES THE FIRST PROCESSOR CORE, AND GENERATES A MACHINE CHECK EXCEPTION TO FIRMWARE
404
FIRMWARE GENERATES A SYSTEM CONTROL INTERRUPT (SCI) TO THE OPERATING SYSTEM AND RETURNS CONTROL OF A SECOND PROCESSOR CORE OF THE PLURALITY OF PROCESSOR CORES TO THE OPERATING SYSTEM
406
OPERATING SYSTEM RESUMES NORMAL EXECUTION ON THE SECOND PROCESSOR CORE WHERE IT WAS INTERRUPTED BY THE MACHINE CHECK EXCEPTION AND QUERIES FIRMWARE TO DETERMINE THE SOURCE OF THE SCI
408
FIRMWARE NOTIFIES THE OPERATING SYSTEM OF A REQUEST FOR HOT REMOVAL OF THE PROCESSOR
410
OPERATING SYSTEM MODIFIES INTERNAL DATA STRUCTURES TO INDICATE THAT THE PROCESSOR IS OFFLINE AND REQUESTS FIRMWARE EJECTION OF THE PROCESSOR
412
FIRMWARE VIRTUALLY EJECTS THE PROCESSOR FROM THE SYSTEM, RESETS THE PROCESSOR, RE-ENABLES FRC OPERATION OF THE FIRST AND SECOND PROCESSOR CORES AND GENERATES AN SCI TO THE OPERATING SYSTEM
414
TO FIGURE 4B

FIG. 4A

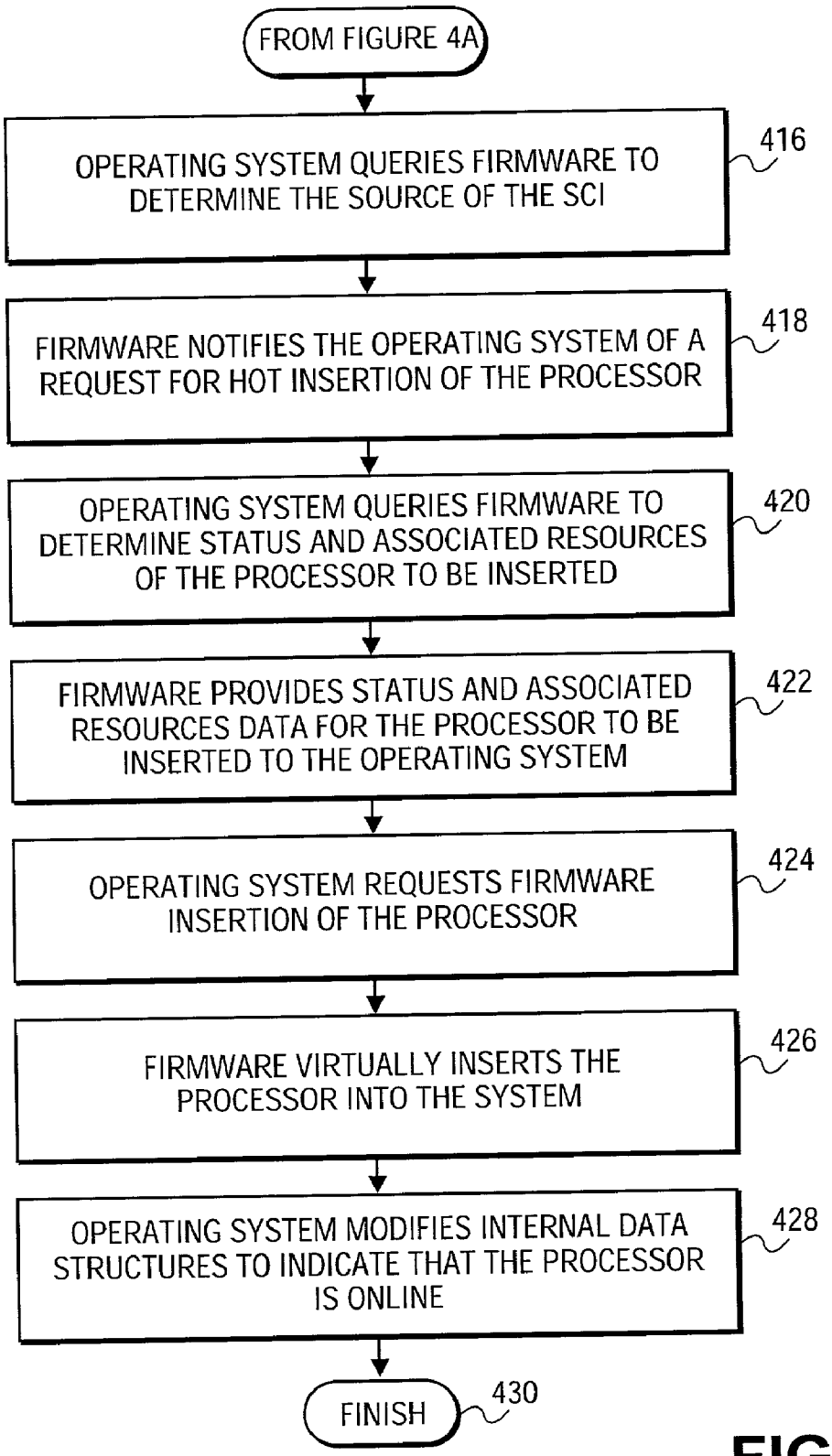
FROM FIGURE 4A
OPERATING SYSTEM QUERIES FIRMWARE TO DETERMINE THE SOURCE OF THE SCI
416
FIRMWARE NOTIFIES THE OPERATING SYSTEM OF A REQUEST FOR HOT INSERTION OF THE PROCESSOR
418
OPERATING SYSTEM QUERIES FIRMWARE TO DETERMINE STATUS AND ASSOCIATED RESOURCES OF THE PROCESSOR TO BE INSERTED
420
FIRMWARE PROVIDES STATUS AND ASSOCIATED RESOURCES DATA FOR THE PROCESSOR TO BE INSERTED TO THE OPERATING SYSTEM
422
OPERATING SYSTEM REQUESTS FIRMWARE INSERTION OF THE PROCESSOR
424
FIRMWARE VIRTUALLY INSERTS THE PROCESSOR INTO THE SYSTEM
426
OPERATING SYSTEM MODIFIES INTERNAL DATA STRUCTURES TO INDICATE THAT THE PROCESSOR IS ONLINE
428
FINISH
430

FIG. 4B

METHOD AND APPARATUS FOR FUNCTIONAL REDUNDANCY CHECK MODE RECOVERY

BACKGROUND OF THE INVENTION

[0001] The present invention relates generally to an improved method and apparatus for data processing. More particularly, the present invention relates to an improved method and apparatus for error detection and recovery within a data processing system. Still more particularly, the present invention relates to a method and apparatus for functional redundancy check mode recovery.

DESCRIPTION OF THE RELATED ART

[0002] Many modern data processing (e.g. computer) systems employ redundancy of system elements to improve system reliability and to decrease the amount of "downtime" resulting from component failures, faults, or internal errors. According to one technique for improving system reliability, two or more physical processing elements or "cores" are associated with and function as a single logical processor. Each processor core may have its own physical processor package or alternatively, two or more processor cores may be incorporated into a single processor package. The processor cores are operated in a functional redundancy check (FRC) mode in which identical instructions are provided to each core and concurrently executed on identical data so that any error occurring within a single core will produce an inconsistent result as compared to the remaining cores associated with a given processor. Specialized FRC logic performs this comparison and generates a signal such as an interrupt or exception once an inconsistent result has been detected.

[0003] In some conventional data processing systems, proprietary system management software has been utilized to perform similar error recovery while in other systems, specialized firmware has been used. According to one technique, hardware is utilized to generate a system-transparent interrupt in response to detecting a mismatch in redundantly operated processor cores. Specialized firmware receives the hardware-generated interrupt and performs appropriate recovery mechanisms. One drawback to this technique is that most conventional operating systems have a maximum tolerable interrupt latency before system errors or failures occur which varies dependent on the workload and associated devices of a data processing system. Another drawback associated with this technique is that since processor state rather than software context is typically saved it may be more difficult to validate a system's capability to recover from an error occurring at any point of the system's operation.

[0004] According to another technique, hardware is utilized to generate a specific system-visible interrupt in response to detecting a mismatch in redundantly operated processor cores. A proprietary operating system program receives the hardware-generated interrupt and performs appropriate recovery mechanisms. Since software context rather than processor state is typically saved, it may be easier to validate a system's ability to recover from errors utilizing this technique. Significant drawbacks associated with this technique however include that it burdens the operating system, limits the number and types of operating systems which may be utilized with a particular hardware platform, limits the ability of the platform to evolve, and prevents differentiation in terms of the underlying platform implementation.

BRIEF DESCRIPTION OF THE DRAWINGS

[0005] The present invention is illustrated by way of example and not limitation in the figures of the accompanying drawings in which similar references are utilized to indicate similar elements and in which:

[0006] **FIG. 1** illustrates an abstraction layer block diagram of a data processing system according to one embodiment of the present invention;

[0007] **FIG. 2** illustrates an exemplary data processing system according to one embodiment of the present invention;

[0008] **FIG. 3** illustrates an exemplary block diagram of processor package **204***a* of **FIG. 2** according to one embodiment of the present invention;

[0009] **FIG. 4***a* illustrates a process flow diagram for a first portion of a method according to one embodiment of the present invention; and

[0010] **FIG. 4***b* illustrates a process flow diagram for a second portion of a method according to one embodiment of the present invention.

DETAILED DESCRIPTION

[0011] A method and apparatus for functional redundancy check mode recovery are described herein. In the following detailed description, numerous specific details such as specific data processing system, processor package, and abstraction layer interface architectures are set forth in order to provide a more thorough understanding of the present invention. It should be evident however, that these and other specific details described need not be utilized to practice the present invention. In other circumstances, well-known structures, elements, or connections have been omitted, or have not been described in particular detail in order to avoid unnecessarily obscuring the present invention.

[0012] Embodiments of the present invention may include data processing hardware, firmware, software, and various processing operations further described herein. The methods, features, and process operations of the present invention may be provided utilizing executable instructions embodied within a machine-accessible medium according to the present invention.

[0013] A machine-accessible medium may include any mechanism that provides (i.e., stores and/or transmits) information in a form accessible by a machine (e.g., a data processing system or computer). For example, a machine-accessible medium includes but is not limited to: read only memory (ROM); random access memory (RAM); magnetic disk storage media; optical storage media; flash memory devices; electrical, optical, acoustical or other form of propagated signals (e.g., carrier waves, infrared signals, digital signals, etc.); or the like. The executable instructions may be utilized to cause a general or special purpose processing element, programmed with the instructions, to perform methods or processes of the present invention. Alternatively, methods, features and operations of the present invention may be performed utilizing specific hard-

ware components that contain hard-wired logic, or by any combination of programmed data processing components and custom hardware components.

[0014] **FIG. 1** illustrates an abstraction layer block diagram of a data processing system **100** according to one embodiment of the present invention. The illustrated data processing system **100** includes hardware **102**, system management programs according to the present invention including firmware **104** and operating system **106**, and application programs **108**. Hardware **102** may comprise a wide variety of devices including processing elements, chipsets, volatile and nonvolatile memories, mass storage devices, and input-output (I/O) devices accessed utilizing firmware **104**.

[0015] Firmware **104** contains basic input-output system (BIOS) program code for data processing system **100** and it initializes, configures, and tests hardware **102** within data processing system **100** and loads some or all of an operating system **106**, typically from storage, into memory in a process called initial program load (IPL). Firmware **104** provides an abstraction layer between higher (application **108** and operating system **106**) layers of data processing system **200** and hardware **102** and, in one embodiment, handles machine check exceptions. Once loaded, operating system **106**, which may include a kernel and various interfaces, interrupt handlers, resource managers, and device drivers, manages the various application programs **108** and hardware **102** of data processing system **100**.

[0016] In one embodiment, system **100** comprises an advanced configuration and power interface (ACPI)-compliant data processing system. Accordingly, operating system **106** includes operating system-directed power management (OSPM) program code, and an ACPI device driver and firmware **104** comprises an ACPI BIOS including ACPI machine language (AML) program code describing what hardware devices are present within data processing system **100**, as well as their configuration and interfaces, via ACPI control methods, objects, registers, and tables. The disclosed ACPI device driver within operating system **106** acts as an AML interpreter to interpret and execute AML program code.

[0017] When an event occurs within data processing system **100**, firmware **104** or hardware **102** causes a bit to be set within an event status register, such as a general purpose event (GPE) status register, to indicate the occurrence of the event. If a corresponding bit is set within an event enable register, the occurrence of the event may be signaled to operating system **106** via the generation of a system-visible interrupt (e.g. a system control interrupt or "SCI"). The operating system **106** receives the system-visible interrupt, determines what event caused the interrupt, and then services the event by executing program code (e.g. control methods) corresponding to bits set in the event status register. Control methods may be written in an ACPI source language (ASL) and compiled into AML for inclusion with the system's BIOS. The operating system **106** executes a control method by retrieving its associated AML code from BIOS and then interpreting the retrieved code utilizing its ACPI device driver/AML interpreter.

[0018] In another embodiment, firmware **104** includes an extensible firmware interface (EFI), a system abstraction level (SAL), and a processor abstraction level (PAL). The PAL provides an abstraction of implementation-specific processor features while the SAL provides a platform abstraction, isolating the EFI and operating system **106** from implementation-specific platform differences. The EFI in turn provides an application programming interface (API) to operating system **106**, allowing the operating system **106** to interact with hardware **102** via the system and processor abstraction levels. When a machine check exception occurs, it may be handled by hardware, firmware, system management (e.g. operating system) software, or not at all. For example, single bit data error correcting code (ECC) errors occurring in processor cache may be handled by processor hardware while multi-bit data ECC or parity errors occurring in processor cache may be handled by an associated PAL.

[0019] In one embodiment, hardware **102** includes two or more processor packages, where each physical processor package includes two or more physical processor cores operating lock step in FRC mode as a single logical processor from the point of view of operating system **106**. Hardware **102** of the disclosed embodiment further includes FRC logic. FRC logic detects errors within individual processor cores of the described embodiment which causes hardware **102** to break lock step between at least two processor cores within a processor package, disabling FRC mode operation. Hardware **102** then disables any of the package's error containing cores, placing them into a "zombie" state, and generates a recoverable machine check exception. The generated machine check exception in turn triggers the execution of a processor error handler within a PAL of one of the package's error-free cores.

[0020] Thereafter, the processor error handler causes a platform error handler within a SAL associated with the package to be executed which initiates a platform-independent device removal sequence for a processor associated with the processor package by generating a system control interrupt (SCI) to operating system **106**. In one embodiment, the SCI is generated using an INT_OUT command capability associated with, for example, the 870 chipset manufactured by Intel Corporation of Santa Clara, Calif.

[0021] In another embodiment, the disclosed processor error handler comprises a PALE_CHECK firmware routine within a PAL of one of the package's error-free cores and the platform error handler comprises SALE_ENTRY and SAL_CHECK firmware routines within an associated SAL. PALE_CHECK saves minimal processor state, determines if the machine check exception's associated errors/events are processor-related, saves processor-related error information, attempts to correct processor-related errors where possible, and then passes control to SALE_ENTRY which branches to SAL_CHECK. SAL_CHECK in turn saves additional processor and platform error and state information, attempts to correct any platform hardware-specific errors, and then generates an SCI to operating system **106** as described.

[0022] Firmware **104**, via the disclosed SAL and PAL, then returns control of the package's error-free cores to operating system **106** which resumes its execution at the point it was interrupted by the generation of the machine check exception. Operating system **106** receives or detects the firmware-generated SCI and utilizes ACPI control methods to determine that the interrupt was caused by a request for processor removal or ejection. Operating system **106** responsively modifies its internal data structures to reflect that the package's associated processor is offline including

saving the context of any threads being executed by operating system **106** on the associated processor, removing it from the mask of current processors, and disabling interrupts to and from the processor. In another embodiment, operating system further writes back the contents of and then disables the associated processor's caches.

[**0023**] Operating system **106** next utilizes ACPI control methods to virtually eject the processor from data processing system **100**. In one embodiment of the invention, this has no effect on hardware **102** other than to communicate to the ACPI BIOS within firmware **104** that the processor's package is being taken offline and to ensure that it is reset or "re-initialized" to the state needed for it to be subsequently awakened or "activated" by operating system **106**. In another embodiment, virtually ejecting the processor results in the physical removal of power from its associated processor package.

[**0024**] Firmware **104**, via ACPI BIOS program code then resets the package to its original state at the time of operating system **106** initial load/boot. In alternative embodiments of the invention, this reset may comprise a "cold" reset or "RESET" operation or a "warm" or "INIT" reset operation. An associated SAL reinitializes the package and re-enables FRC mode lock step operation between two or more of the package's associated processor cores in response to detecting the ACPI BIOS-initiated reset operation. In yet another embodiment, the package's associated SAL initiates a platform-independent device insertion sequence for the processor package's associated processor by generating a system control interrupt (SCI) to operating system **106** via the previously disclosed INT_OUT command capability.

[**0025**] Operating system **106** receives the firmware-generated SCI and utilizes ACPI control methods to determine that the interrupt was caused by a request for processor insertion. Operating system **106** responsively modifies its internal data structures to reflect that the package's associated processor is being brought online and then wakes and configures the associated processor for use. While specific firmware components have been described herein, it should be appreciated that alternative embodiments of the present invention may be implemented utilizing alternative firmware components and/or a combination of platform independent and dependent software components.

[**0026**] **FIG. 2** illustrates an exemplary data processing system **200** according to one embodiment of the present invention. The data processing system **200** of the illustrated embodiment includes a first node **202***a* "Node A" and a second node **202***b* "Node B" coupled together and to various shared resources (e.g. memory, mass storage devices, I/O devices, etc.) via a shared interconnect including one or more scalability port switches. For example, Node A **202***a* of the illustrated embodiment may be coupled to and communicate with Node B **202***b* and various shared storage and I/O devices via a shared interconnect comprising a first scalability port switch (SPS) **212***a* "SPS-A" and a second SPS **212***b* "SPS-B".

[**0027**] Node A **202***a* of the illustrated embodiment includes a plurality of processor packages **204***a-d* and a memory **206***a*. Each processor package **204***a-d* may contain one or more physical processor cores associated with one or more logical processors. In one embodiment, each of the illustrated processor packages **204***a-d* includes a pair of processor cores operable in an FRC mode as a single logical processor. Memory **206***a* is capable of storing data and/or processor-executable instructions and may comprise any suitable memory such as dynamic random access memory (DRAM) for example. Node A **202***a* further includes a scalable node controller (SNC) **208***a* "SNC-A" coupled to each processor package **204***a-d* via a shared bus **205***a* and to memory **206***a* via a memory interconnect **210***a*. SNC-A **208***a* of the illustrated embodiment may be further utilized to coupled Node A **202***a* to SPS-A **212***a* and SPS-B **212***b* of the shared interconnect as illustrated. Additional nodes (e.g. Node B **202***b*) may include substantially identical components operating in a substantially identical manner as those of Node A **202***a*. Node B **202***b* of the illustrated embodiment has accordingly not been described in order to avoid unnecessarily obscuring the present invention.

[**0028**] Each SPS (**212***a*, **212***b*) may in turn be coupled to a first I/O hub (IOH) **214***a* "IOH-A" and a second IOH **214***b* "IOH-B" as illustrated, allowing a greater number and variety of shared devices such as memory, mass storage devices (e.g. optical or magnetic storage devices), and I/O devices (e.g. display devices, keyboards, mice, trackballs, network interface cards, etc.) to be coupled to data processing system **200** via each IOH's hub interfaces **222**. For example, IOH-A **214***a* may be coupled to and communicate with a conventional I/O hub **216***a* "ICH2", one or more peripheral component interconnect (PCI) or PCI extended (PCI-X) controller hubs **218***a* "P64H2", and an Infiniband controller hub **220***a* "IVXB" via hub interfaces **222** as illustrated. IOH-B **214***b* may be similarly coupled to a conventional I/O hub **216***b*, PCI/PCI-X controller hubs **218***a*, and an Infiniband controller hub **220***a* as shown, however, in alternative embodiments of the present invention, each IOH may be coupled to any number or combination of controller hubs, mass storage, memory, or I/O devices, or the like.

[**0029**] ICH**2216***a* of the illustrated embodiment provides an interface to peripheral components or other devices for data processing system **200**. ICH**2216***a* may comprise any suitable interface controller to provide for any suitable communication link to IOH-A **214***a* and/or to any suitable device or component in communication with ICH**2216***a*. ICH**2216***a* for one embodiment provides suitable buffering and arbitration for each interface. ICH**2216***a* may be further coupled to and provide an interface to a firmware hub (FWH) **224***a* as illustrated. FWH **224***a* may comprise any suitable interface controller to provide for any suitable communication link to ICH**2216***a*. In the illustrated embodiment, FWH **224***a* comprises a memory **226***a* to store one or more firmware interfaces (e.g. SAL or ACPI BIOS program code) according to the present invention. Memory **226***a* may comprise any suitable memory capable of storing data and/or processor-executable instructions. In one embodiment, memory **226***a* comprises a non-volatile memory such as a read-only memory (ROM), programmable read-only memory (PROM), flash memory, or the like.

[**0030**] While a specific embodiment of data processing system **200** has been illustrated herein, it should be appreciated that additional alternative embodiments as well as variations or modifications of the illustrated exemplary embodiment may be implemented within the scope of the present invention. For example, in one alternative embodiment, data processing system **200** may be implemented with

a single node having more or fewer components than the nodes **202***a-b* depicted. A node may accordingly be coupled to available resources without the use of a scalability port switch by coupling, for example an associated scalable node controller directly to one or more I/O hubs. Firmware interfaces (e.g. SAL or ACPI BIOS program code) according to the present invention may also be stored within Node A **202***a* either within existing memory **206***a* or an additional memory coupled to SNC-A **208***a* directly or via a conventional I/O hub and FWH as described with respect to memory **226***a*.

[**0031**] It should similarly be appreciated that the present invention may be practiced utilizing a data processing system **200** having a greater or lesser number of components as the illustrated exemplary system. For example, data processing system **200** may comprise, in alternative embodiments of the present invention, one of a wide variety of server or client computer systems or devices such as a workstation, personal computer, "thin client" (i.e. network computer or NetPC), Internet appliance, terminal, palmtop computing device, robust cellular or Personal Communications Services (PCS) telephone, "thin server" (sometimes called an appliance server, application server, or specialty server), or the like. In one embodiment, data processing system **200** comprises a high-availability server data processing system.

[**0032**] **FIG. 3** illustrates an exemplary block diagram of processor package **204***a* of **FIG. 2** according to one embodiment of the present invention. In the illustrated embodiment, a processor package **204***a* may be coupled to a shared "front side" bus **205***a*, and may include functional redundancy check (FRC) logic **308**, a shared cache memory **306**, and a first processor core **302***a* and a second processor core **302***b*, each having an associated private cache memory **304***a* and **304***b*, respectively. Within the present description, the term "processor core" or "core" describes a physical processing element or execution entity, the term "processor package" or "package" describes a physical entity which incorporates, houses, or contains one or more processor cores. The term "processor" may therefore be utilized to describe either a physical processing element or execution entity, or a logical processing element or execution entity as viewed by system management or application software (e.g. operating system software).

[**0033**] In one embodiment, the first and second processor cores **302***a-b* within the depicted processor package **204***a* may be bound together to function as a single logical processor from the point of view of operating system software. Both cores **302***a* and **302***b* operate in an FRC mode in which identical instructions may be provided to each core and concurrently executed on identical data utilizing FRC logic **308**. Processor cores **302***a*, **302***b* may each comprise any suitable processor architecture and for one embodiment comprise an Intel™ Architecture, used for example, in the Itanium™ family of processors available from Intel™ Corporation of Santa Clara, Calif. FRC logic **308** operates processor cores **302***a-b* as a single logical processor by concurrently providing each with identical data and instructions. Each processor core **302***a-b* executes instructions and processes data to generate results which may then be stored within an associated private (e.g. **304***a-b*) and/or shared (e.g. **306**) cache. FRC logic **308** monitors processor core store operations or "writes" to shared cache **306** to detect inconsistencies in the generated results which indicate an FRC mismatch error. Such inconsistencies can occur as a result of partial or total hardware failure, or the effect of an alpha particle or other form of natural or artificial radiation impacting one or more processor cores.

[**0034**] In alternative embodiments, FRC logic **308** may be implemented as executable firmware or dedicated hardware coupled with or incorporated into one or more of the processor package's **204***a* components. In yet another embodiment, a plurality of processor packages are provided, each including a single processor core with FRC logic being provided either within each processor package or external to each package to operate two or more of the package's associated processor cores in an FRC mode.

[**0035**] **FIG. 4***a* illustrates a process flow diagram for a first portion of a method according to one embodiment of the present invention. The illustrated process begins (block **402**) and thereafter hardware (e.g FRC logic) detects an error within a first processor core of a plurality of processor cores operating in an FRC mode as a single logical processor, disables the first processor core, and generates a system-transparent machine check exception (block **404**) which in turn causes firmware (e.g. SAL program code) to generate a system-visible system control interrupt (SCI) to operating system (OS) software and return control of at least a second, error-free processor core of the plurality of processor cores to the OS (block **406**). In alternative embodiments in which the described plurality includes three or more processor cores, additional error-free cores may also be turned over to operating system control.

[**0036**] OS software then resumes execution on the second processor core where it was interrupted by the machine check exception and queries firmware (e.g. ACPI BIOS) to determine the source of the SCI (block **408**). In one embodiment, this may be accomplished by the OS executing an _Lxx control method. Firmware responds to the OS query by notifying the operating system of a request for processor hot removal (block **410**). This may be accomplished using an ACPI Notify command. The operating system then modifies its internal data structures to indicate that the processor is offline and requests firmware ejection of the processor (block **412**). In one embodiment, the operating system requests firmware ejection of the processor by executing an _EJx control method.

[**0037**] In response to the operating system ejection request, firmware virtually ejects the processor from the system, resets the processor, re-enables FRC operation of at least the first and second processor cores and generates an SCI to the Operating System (block **414**) before beginning a second portion of the illustrated method embodiment depicted in **FIG. 4***b*. Thereafter, in the process illustrated in **FIG. 4***b*, operating system software queries firmware (e.g. ACPI BIOS) to determine the source of the previously-generated SCI (block **416**). Firmware responds to the OS query by notifying the operating system of a request for processor hot insertion (block **418**). Next, the operating system queries firmware to determine the status and to identify the associated resources of the processor to be inserted (block **420**) and firmware provides the operating system with the requested data (block **422**). In one embodiment, this may be accomplished by executing one or more control methods (e.g., _STA, _MAT, and _CRS). Once the

relevant status and resource data is received, the operating system requests insertion of the processor (block **424**) and the firmware virtually inserts the processor into the system (block **426**). In one embodiment, the operating system may request insertion of the processor using a _PS**0** control method which puts a device into its D**0** or "active" state. Once the processor has been inserted and/or activated as described, the OS modifies its internal data structures to indicate that the processor is online and available before the illustrated process terminates (block **430**).

[**0038**] In the foregoing description, the present invention has been described with reference to specific exemplary embodiments thereof. It will be apparent however, that variations or modifications of the exemplary embodiments described as well as alternative embodiments of the present invention may be implemented without departing from the broader spirit or scope of the present invention as defined in the appended claims. The specification and drawings are accordingly to be regarded in an illustrative rather than a restrictive sense.

What is claimed is:

1. A method comprising:

detecting an event associated with a device within a data processing system;

initiating a platform-independent device removal sequence for said device in response to detecting said event associated with said device;

virtually ejecting said device from said data processing system in response to initiating said platform-independent device removal sequence for said device; and

servicing said event associated with said device in response to virtually ejecting said device from said data processing system.

2. The method of claim 1, wherein initiating a platform-independent device removal sequence for said device in response to detecting said event associated with said device comprises generating a system control interrupt.

3. The method of claim 2, wherein generating a system control interrupt comprises generating a system control interrupt utilizing an INT_OUT command.

4. The method of claim 1, wherein said device comprises a processor including a first processor core and a second processor core, said method further comprising operating said first processor core and said second processor core in a functional redundancy check mode.

5. The method of claim 4, wherein detecting an event associated with a device within a data processing system comprises detecting an error within at least one of said first processor core and said second processor core.

6. The method of claim 4, said method further comprising disabling interrupts to said processor in response to initiating a platform-independent device removal sequence for said device.

7. The method of claim 4, wherein operating said first processor core and said second processor core in a functional redundancy check mode comprises concurrently executing a thread on said first processor core and said second processor core, said method further comprising:

saving a context of said thread in response to initiating a platform-independent device removal sequence for said device.

8. The method of claim 5, said method further comprising disabling said functional redundancy check mode in response to detecting said error within at least one of said first processor core and said second processor core.

9. The method of claim 8, wherein servicing said event associated with said device in response to virtually ejecting said device from said data processing system comprises:

resetting said processor; and

re-enabling said functional redundancy check mode in response to resetting said processor.

10. The method of claim 1, said method further comprising:

initiating a platform-independent device insertion sequence for said device in response to servicing said event associated with said device; and

virtually inserting said device into said data processing system in response to initiating said platform-independent device insertion sequence for said device.

11. A machine-accessible medium having machine-executable instructions embodied therein which, when executed by a machine, causes said machine to perform a method comprising:

detecting an event associated with a device within a data processing system;

initiating a platform-independent device removal sequence for said device in response to detecting said even t associated with said device;

virtually ejecting said device from said data processing system in response to initiating said platform-independent device removal sequence for said device; and

servicing said event associated with said device in response to virtually ejecting said device from said data processing system.

12. The machine-accessible medium of claim 11, wherein said device comprises a processor including a first processor core and a second processor core, said method further comprising operating said first processor core and said second processor core in a functional redundancy check mode.

13. The machine-accessible medium of claim 12, wherein detecting an event associated with a device within a data processing system comprises detecting an error within at least one of said first processor core and said second processor core.

14. The machine-accessible medium of claim 12, said method further comprising disabling interrupts to said processor in response to initiating a platform-independent device removal sequence for said device.

15. The machine-accessible medium of claim 12, wherein operating said first processor core and said second processor core in a functional redundancy check mode comprises concurrently executing a thread on said first processor core and said second processor core, said method further comprising:

saving a context of said thread in response to initiating a platform-independent device removal sequence for said device.

16. The machine-accessible medium of claim 13, said method further comprising disabling said functional redun-

dancy check mode in response to detecting said error within said at least one of said first processor core and said second processor core.

17. The machine-accessible medium of claim 16, wherein servicing said event associated with said device in response to virtually ejecting said device from said data processing system comprises:

resetting said processor; and

re-enabling said functional redundancy check mode in response to resetting said processor.

18. A data processing system comprising:

a processor; and

a memory coupled to said processor, said memory including a firmware interface to initiate a platform-independent device removal sequence for said processor in response to a detection of an event associated with said processor, to virtually eject said processor from said data processing system in response to an initiation of a platform-independent device removal sequence for said processor, and to service said event associated with said processor in response to a virtual ejection of said processor from said data processing system.

19. The data processing system of claim 18, wherein said firmware interface to initiate a platform-independent device removal sequence for said processor in response to a detection of an event associated with said processor comprises a firmware interface to generate a system control interrupt.

20. The data processing system of claim 19, wherein said firmware interface to generate a system control interrupt comprise a firmware interface to generate a system control interrupt utilizing an INT_OUT command.

21. The data processing system of claim 18, wherein said processor comprises a first processor core and a second processor core, said data processing system further comprising functional redundancy check logic to operate said first processor core and said second processor core in a functional redundancy check mode.

22. The data processing system of claim 21, wherein said firmware interface to initiate a platform-independent device removal sequence for said processor in response to a detection of an event associated with said processor comprises a firmware interface to initiate a platform-independent device removal sequence for said processor in response to a detection of an error within at least one of said first processor core and said second processor core.

23. The data processing system of claim 21, said memory further including an operating system to disable interrupts to said processor in response to an initiation of a platform-independent device removal sequence for said processor.

24. The data processing system of claim 21, wherein

said functional redundancy check logic to operate said first processor core and said second processor core in a functional redundancy check mode comprises functional redundancy check logic to concurrently execute a thread on said first processor core and said second processor core; and

said memory further includes an operating system to save a context of said thread in response to an initiation of a platform-independent device removal sequence for said processor.

25. The data processing system of claim 21, wherein said firmware interface further comprises a firmware interface to disable said functional redundancy check mode in response to said detection of an event associated with said processor.

26. The data processing system of claim 25, wherein said firmware interface to service said event associated with said processor in response to a virtual ejection of said processor from said data processing system comprises a firmware interface to reset said processor and to re-enable said functional redundancy check mode in response to a reset of said processor.

27. The data processing system of claim 18, wherein said firmware interface further comprises a firmware interface to initiate a platform-independent device insertion sequence for said processor in response to a servicing of said event associated with said processor and to virtually insert said processor into said data processing system in response to an initiation of a platform-independent device insertion sequence for said processor.

28. An apparatus comprising:

a first firmware interface to detect an event associated with a processor within a data processing system;

a second firmware interface to initiate a platform-independent device removal sequence for said processor in response to a detection of said event associated with said processor;

a third firmware interface to virtually eject said processor from said data processing system in response to an initiation of a platform-independent device removal sequence for said processor; and

a fourth firmware interface to service said event associated with said processor in response to a virtual ejection of said processor from said data processing system.

29. The apparatus of claim 28, wherein said second firmware interface to initiate a platform-independent device removal sequence for said processor in response to a detection of said event associated with said processor comprises a firmware interface to generate a system control interrupt.

30. The apparatus of claim 28, said apparatus further comprising:

a fifth firmware interface to initiate a platform-independent device insertion sequence for said processor in response to a servicing of said event associated with said processor; and

a sixth firmware interface to virtually insert said processor into said data processing system in response to an initiation of a platform-independent device insertion sequence for said processor.

* * * * *