US007296181B2

(12) **United States Patent**
Safford et al.

(10) **Patent No.: US 7,296,181 B2**
(45) **Date of Patent: Nov. 13, 2007**

(54) **LOCKSTEP ERROR SIGNALING**

(75) Inventors: **Kevin David Safford**, Fort Collins, CO (US); **Eric Richard Delano**, Fort Collins, CO (US)

(73) Assignee: **Hewlett-Packard Development Company, L.P.**, Houston, TX (US)

(*) Notice: Subject to any disclaimer, the term of this patent is extended or adjusted under 35 U.S.C. 154(b) by 554 days.

(21) Appl. No.: **10/818,993**

(22) Filed: **Apr. 6, 2004**

(65) **Prior Publication Data**

US 2005/0240829 A1 Oct. 27, 2005

(51) **Int. Cl.**
G06F 11/00 (2006.01)

(52) **U.S. Cl.** **714/11**; 714/12; 714/49

(58) **Field of Classification Search** 714/11, 714/12, 49

See application file for complete search history.

(56) **References Cited**

U.S. PATENT DOCUMENTS

4,785,453	A	11/1988	Chandran et al.	
5,223,152	A	6/1993	Freymeyer et al.	
5,276,823	A *	1/1994	Cutts et al.	714/11
5,434,997	A	7/1995	Landry et al.	
5,787,476	A	7/1998	Laudon et al.	
5,948,111	A	9/1999	Taylor et al.	
6,065,135	A	5/2000	Marshall et al.	
6,182,195	B1	1/2001	Laudon et al.	
6,247,144	B1	6/2001	Macias-Garza et al.	
6,393,582	B1 *	5/2002	Klecka et al.	714/11
6,473,869	B2 *	10/2002	Bissett et al.	714/12
6,499,048	B1	12/2002	Emrys	
6,604,177	B1	8/2003	Kondo et al.	
6,615,366	B1 *	9/2003	Grochowski et al.	714/10
6,625,749	B1 *	9/2003	Quach	714/10
6,640,313	B1	10/2003	Quach	
6,751,698	B1 *	6/2004	Deneroff et al.	710/317
6,820,213	B1 *	11/2004	Somers et al.	714/11
7,017,073	B2	3/2006	Nair	
7,055,060	B2 *	5/2006	Nguyen et al.	714/11
2001/0034824	A1	10/2001	Mukherjee	
2001/0034854	A1	10/2001	Mukherjee	
2002/0073357	A1 *	6/2002	Dhong et al.	714/19
2002/0133745	A1	9/2002	Okin	
2002/0144177	A1	10/2002	Kondo et al.	
2002/0152418	A1 *	10/2002	Griffin et al.	714/11
2002/0152420	A1 *	10/2002	Chaudhry et al.	714/11
2003/0005380	A1 *	1/2003	Nguyen et al.	714/736
2003/0126409	A1	7/2003	Juan et al.	
2005/0108509	A1	5/2005	Safford	
2005/0240793	A1	10/2005	Safford	

FOREIGN PATENT DOCUMENTS

EP	0201356 B1	11/1986
WO	WO94/08293	4/1994
WO	WO 02/084490	10/2002

* cited by examiner

Primary Examiner—Gabriel Chu

(57) **ABSTRACT**

Techniques are disclosed, for use in a computer system including a plurality of processing units coupled over a system fabric, to identify a lockstep error associated with a first packet to be transmitted over the system fabric; set a viral indicator in the first packet to indicate the lockstep error; and transmit the modified packet over the system fabric.

48 Claims, 11 Drawing Sheets

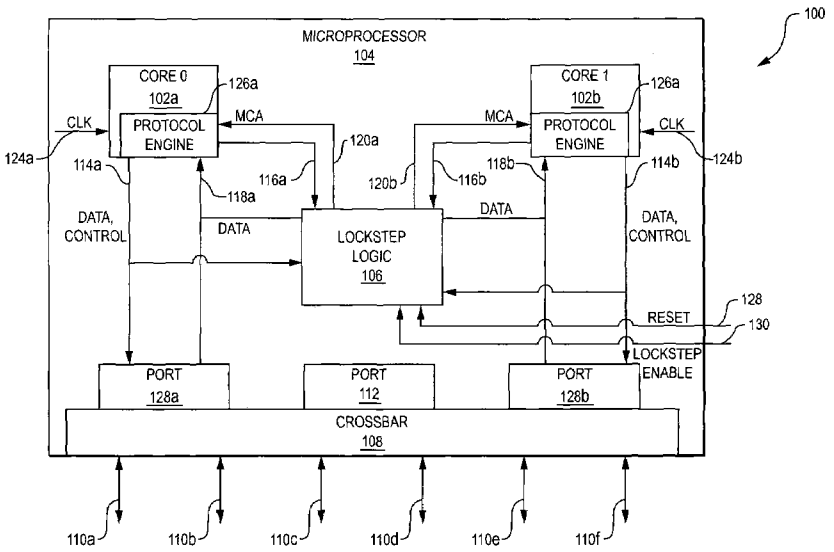

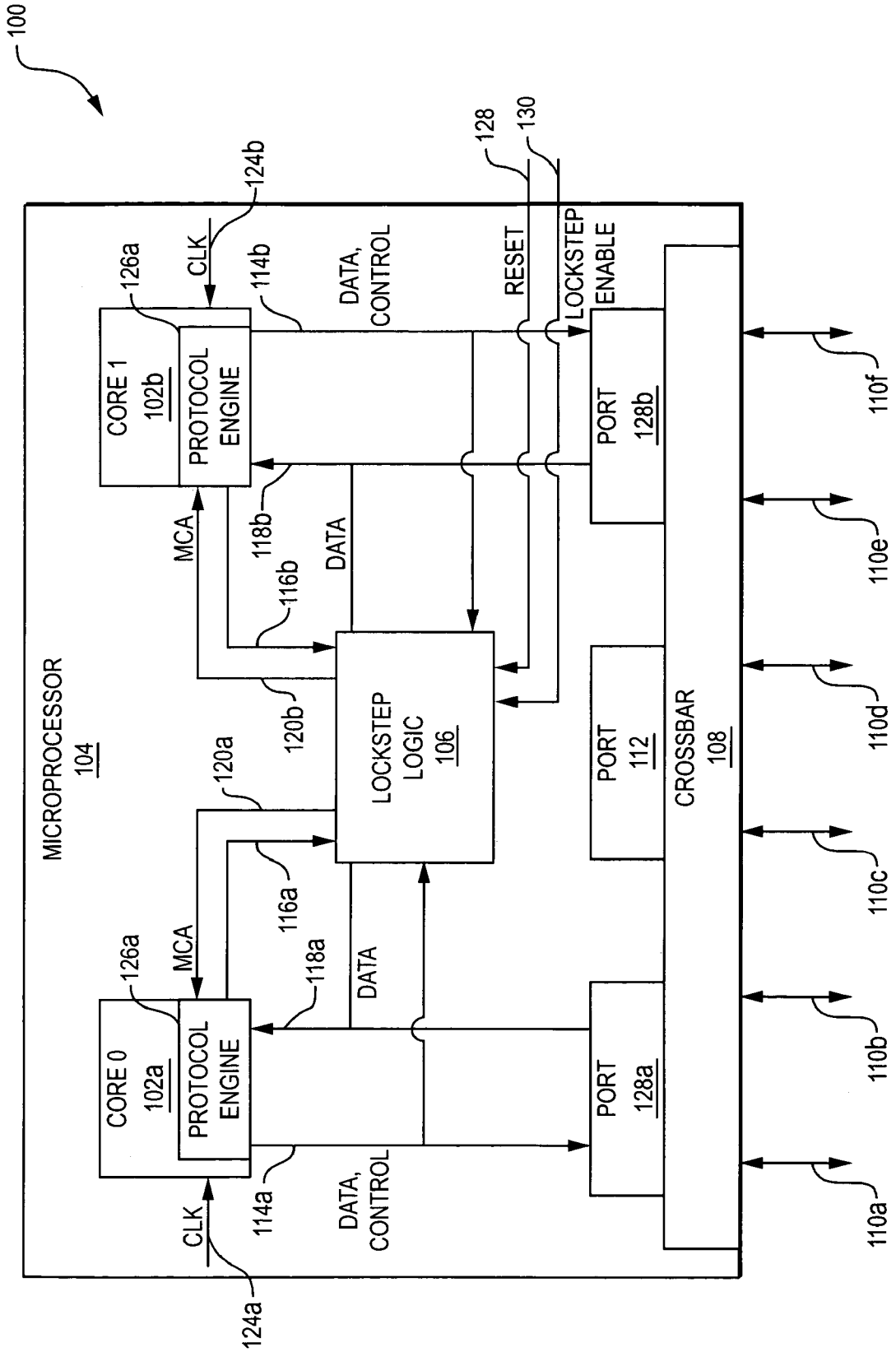
100
MICROPROCESSOR
104
CORE 0
102a
PROTOCOL
ENGINE
CORE 1
102b
PROTOCOL
ENGINE
LOCKSTEP
LOGIC
106
PORT
128a
PORT
112
PORT
128b
CROSSBAR
108
CLK
124a
124b
MCA
DATA
DATA,
CONTROL
RESET
LOCKSTEP
ENABLE
126a
114a
114b
116a
116b
118a
118b
120a
120b
128
130
110a
110b
110c
110d
110e
110f

FIG. 1A

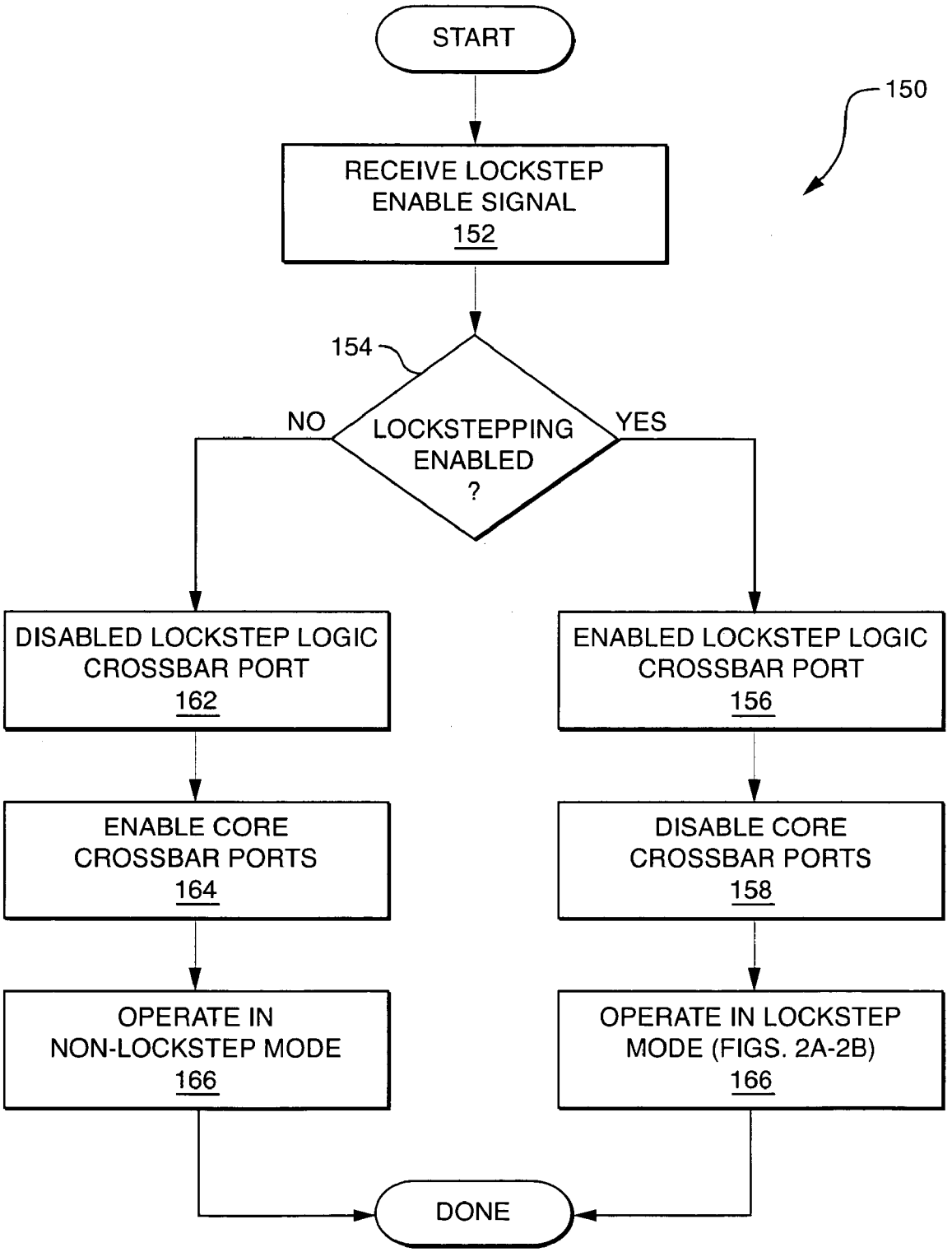
START
150
RECEIVE LOCKSTEP ENABLE SIGNAL 152
154
LOCKSTEPPING ENABLED ?
NO
YES
DISABLED LOCKSTEP LOGIC CROSSBAR PORT 162
ENABLED LOCKSTEP LOGIC CROSSBAR PORT 156
ENABLE CORE CROSSBAR PORTS 164
DISABLE CORE CROSSBAR PORTS 158
OPERATE IN NON-LOCKSTEP MODE 166
OPERATE IN LOCKSTEP MODE (FIGS. 2A-2B) 166
DONE

FIG. 1B

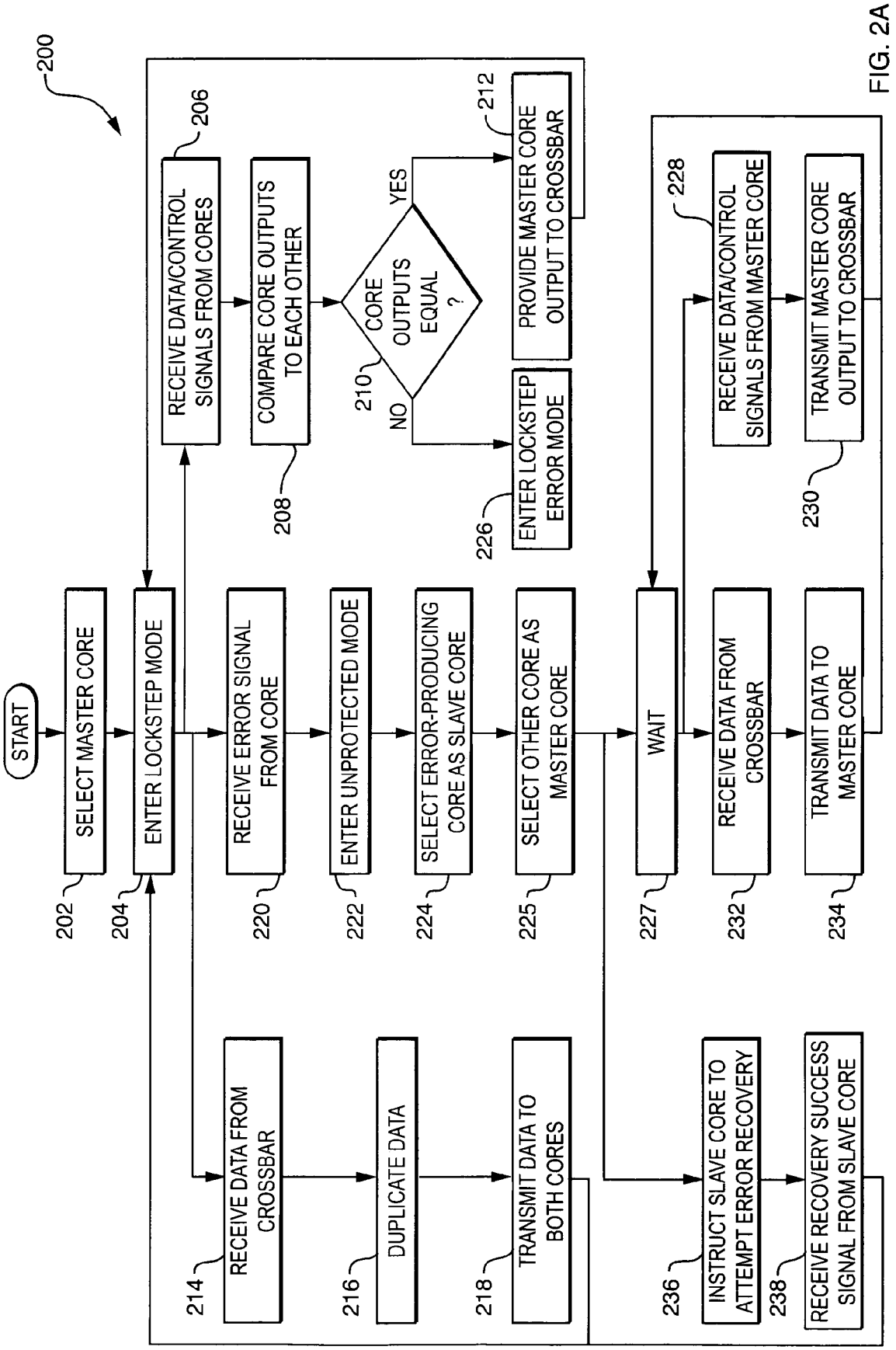
200
START
SELECT MASTER CORE
202
ENTER LOCKSTEP MODE
204
RECEIVE DATA/CONTROL SIGNALS FROM CORES
206
COMPARE CORE OUTPUTS TO EACH OTHER
208
CORE OUTPUTS EQUAL ?
210
YES
NO
PROVIDE MASTER CORE OUTPUT TO CROSSBAR
212
ENTER LOCKSTEP ERROR MODE
226
RECEIVE ERROR SIGNAL FROM CORE
220
ENTER UNPROTECTED MODE
222
SELECT ERROR-PRODUCING CORE AS SLAVE CORE
224
SELECT OTHER CORE AS MASTER CORE
225
WAIT
227
RECEIVE DATA/CONTROL SIGNALS FROM MASTER CORE
228
TRANSMIT MASTER CORE OUTPUT TO CROSSBAR
230
RECEIVE DATA FROM CROSSBAR
232
TRANSMIT DATA TO MASTER CORE
234
RECEIVE DATA FROM CROSSBAR
214
DUPLICATE DATA
216
TRANSMIT DATA TO BOTH CORES
218
INSTRUCT SLAVE CORE TO ATTEMPT ERROR RECOVERY
236
RECEIVE RECOVERY SUCCESS SIGNAL FROM SLAVE CORE
238

FIG. 2A

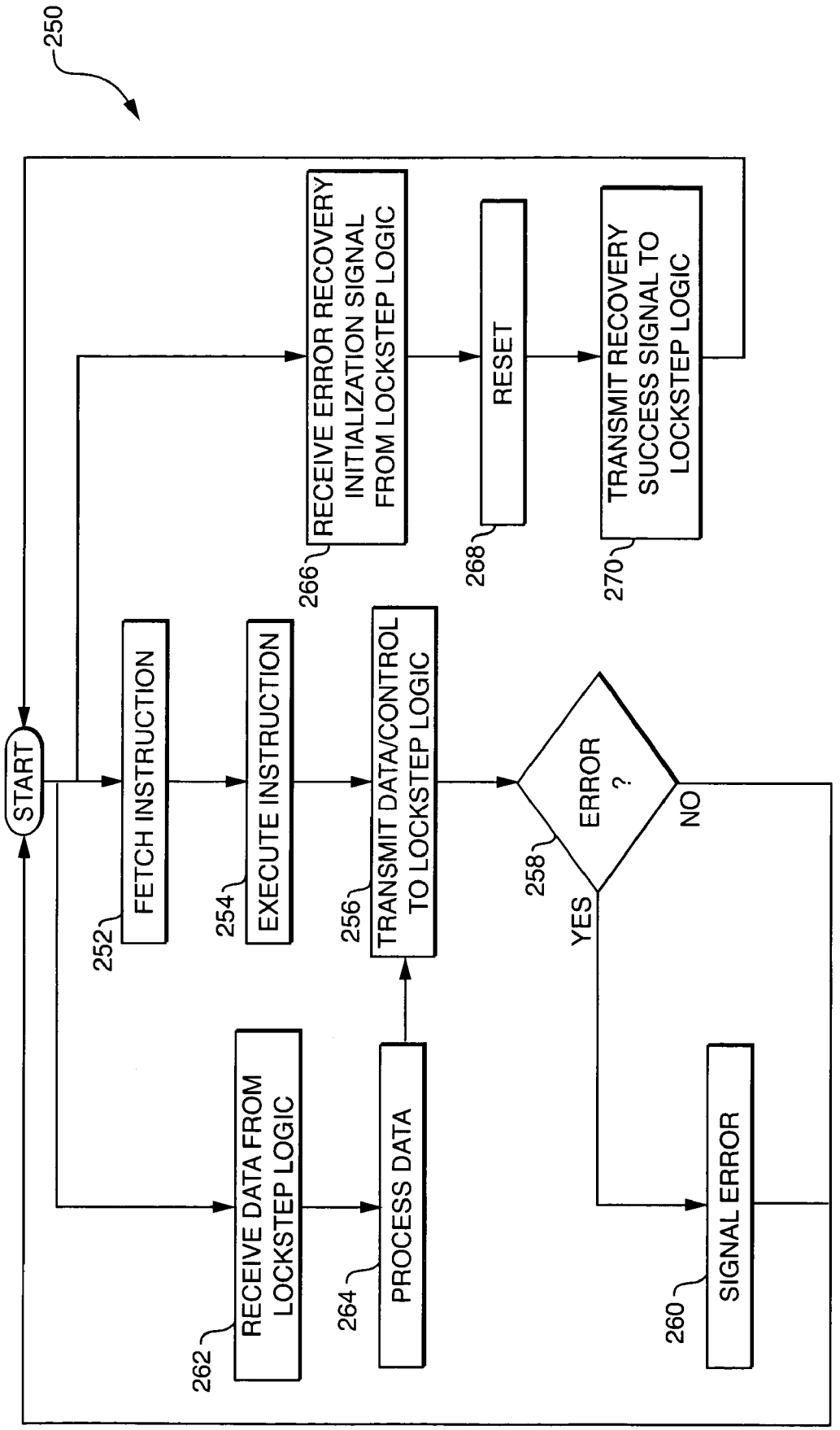
250
START
FETCH INSTRUCTION
252
EXECUTE INSTRUCTION
254
TRANSMIT DATA/CONTROL TO LOCKSTEP LOGIC
256
ERROR ?
258
YES
NO
RECEIVE ERROR RECOVERY INITIALIZATION SIGNAL FROM LOCKSTEP LOGIC
266
RESET
268
TRANSMIT RECOVERY SUCCESS SIGNAL TO LOCKSTEP LOGIC
270
RECEIVE DATA FROM LOCKSTEP LOGIC
262
PROCESS DATA
264
SIGNAL ERROR
260

FIG. 2B

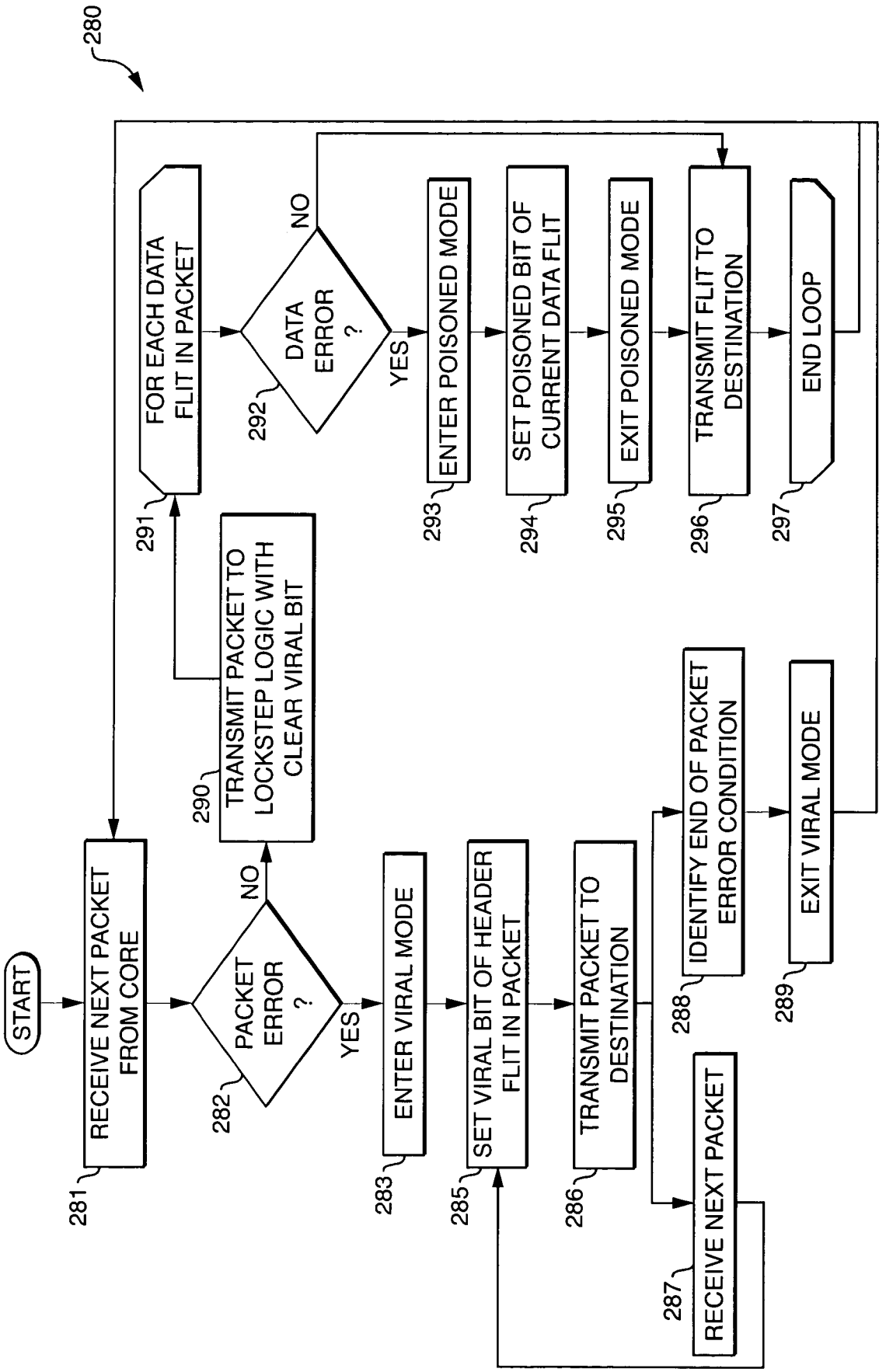
280
START
RECEIVE NEXT PACKET FROM CORE
281
PACKET ERROR ?
282
NO
YES
TRANSMIT PACKET TO LOCKSTEP LOGIC WITH CLEAR VIRAL BIT
290
ENTER VIRAL MODE
283
SET VIRAL BIT OF HEADER FLIT IN PACKET
285
TRANSMIT PACKET TO DESTINATION
286
IDENTIFY END OF PACKET ERROR CONDITION
288
RECEIVE NEXT PACKET
287
EXIT VIRAL MODE
289
FOR EACH DATA FLIT IN PACKET
291
DATA ERROR ?
292
NO
YES
ENTER POISONED MODE
293
SET POISONED BIT OF CURRENT DATA FLIT
294
EXIT POISONED MODE
295
TRANSMIT FLIT TO DESTINATION
296
END LOOP
297

FIG. 2C

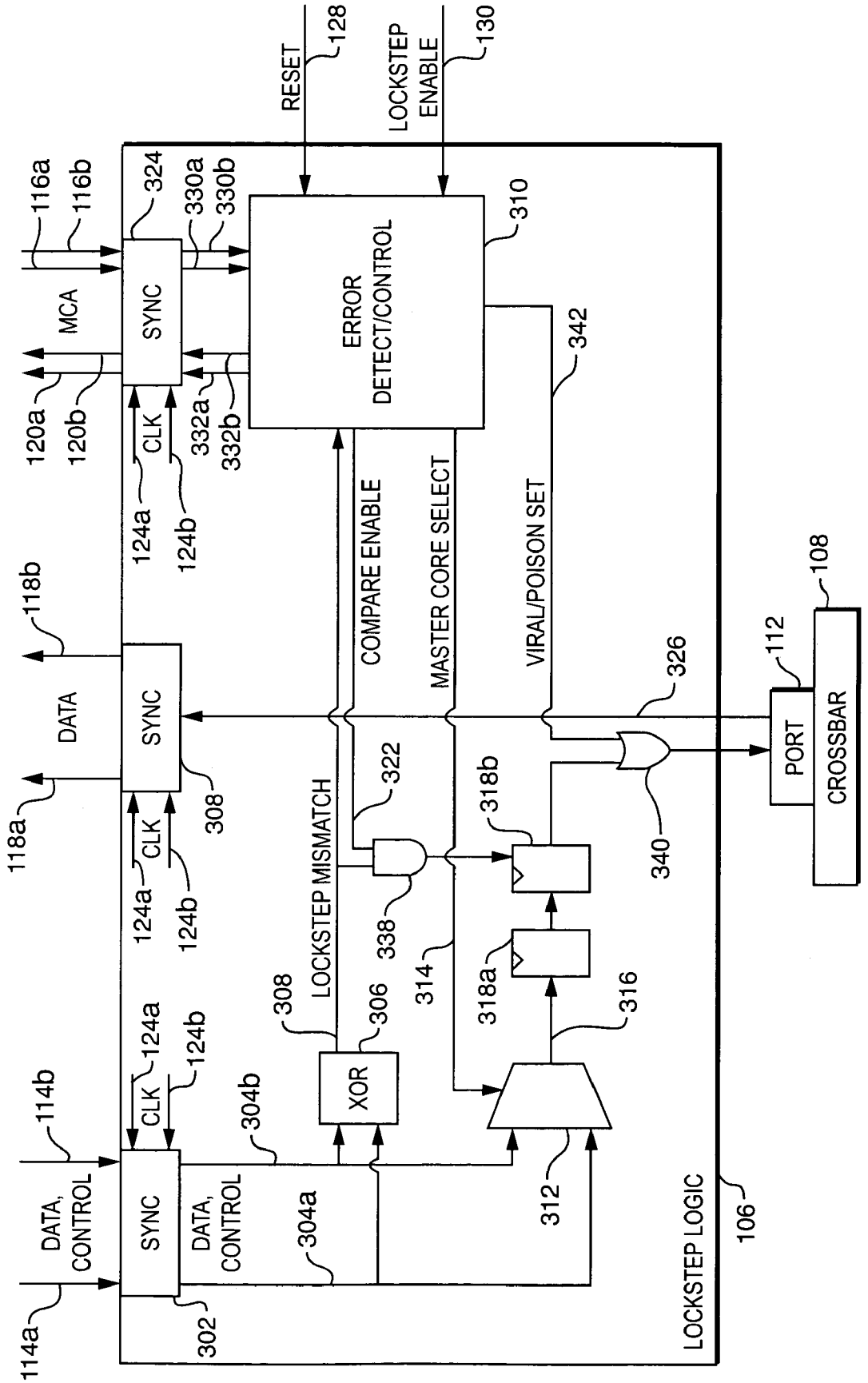
RESET
128
LOCKSTEP ENABLE
130
116a
116b
324
330a
330b
310
MCA
SYNC
ERROR DETECT/CONTROL
342
120a
120b
CLK
332a
332b
124a
124b
COMPARE ENABLE
MASTER CORE SELECT
VIRAL/POISON SET
118b
108
112
326
DATA
SYNC
PORT
CROSSBAR
322
318b
118a
308
LOCKSTEP MISMATCH
340
338
314
318a
316
306
114b
304b
XOR
312
DATA, CONTROL
SYNC
DATA, CONTROL
304a
106
114a
302
LOCKSTEP LOGIC

FIG. 3

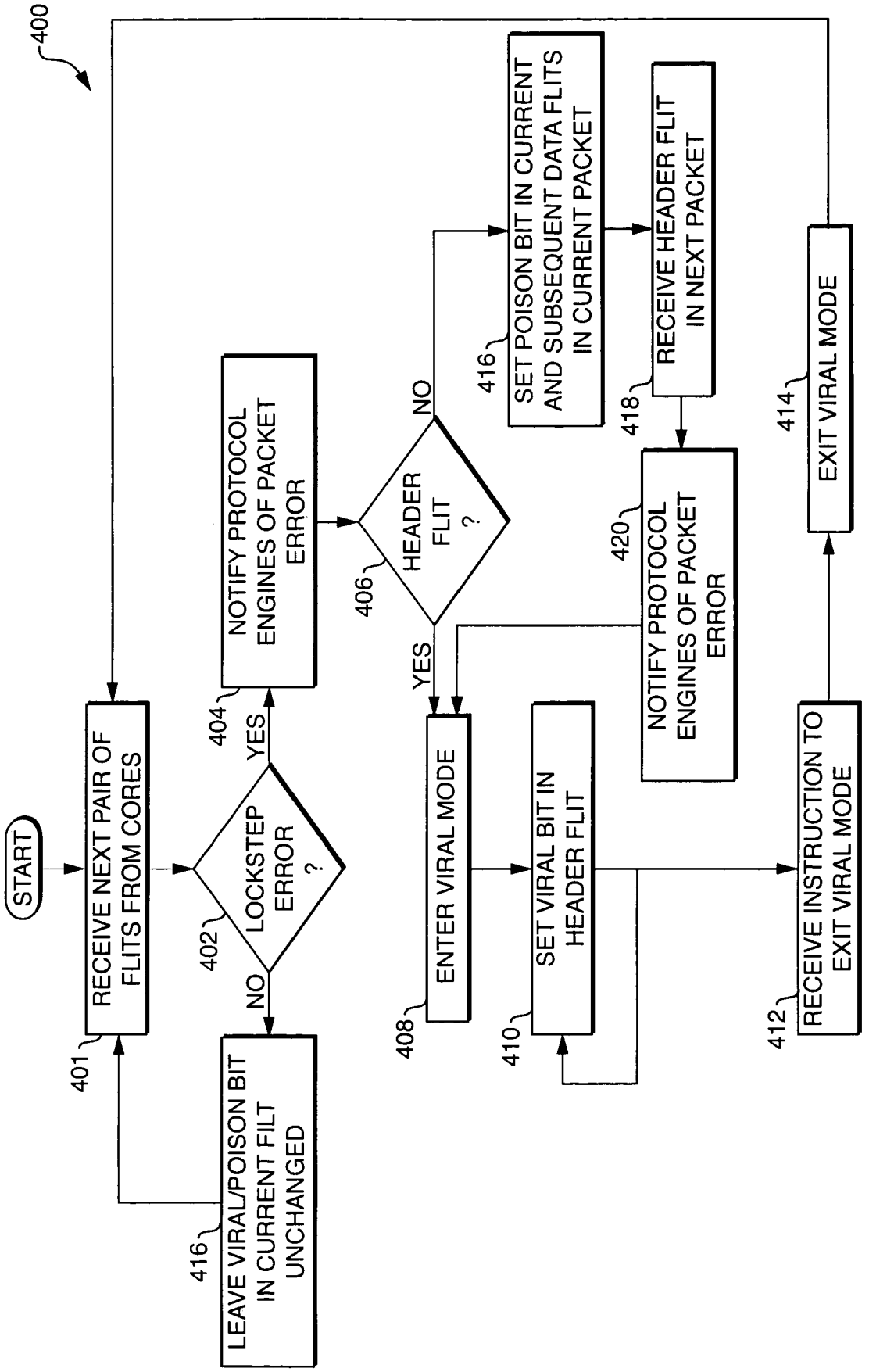
400
START
RECEIVE NEXT PAIR OF FLITS FROM CORES
401
LOCKSTEP ERROR ?
402
YES
NO
NOTIFY PROTOCOL ENGINES OF PACKET ERROR
404
LEAVE VIRAL/POISON BIT IN CURRENT FILT UNCHANGED
416
HEADER FLIT ?
406
NO
YES
SET POISON BIT IN CURRENT AND SUBSEQUENT DATA FLITS IN CURRENT PACKET
416
RECEIVE HEADER FLIT IN NEXT PACKET
418
NOTIFY PROTOCOL ENGINES OF PACKET ERROR
420
ENTER VIRAL MODE
408
SET VIRAL BIT IN HEADER FLIT
410
RECEIVE INSTRUCTION TO EXIT VIRAL MODE
412
EXIT VIRAL MODE
414

FIG. 4A

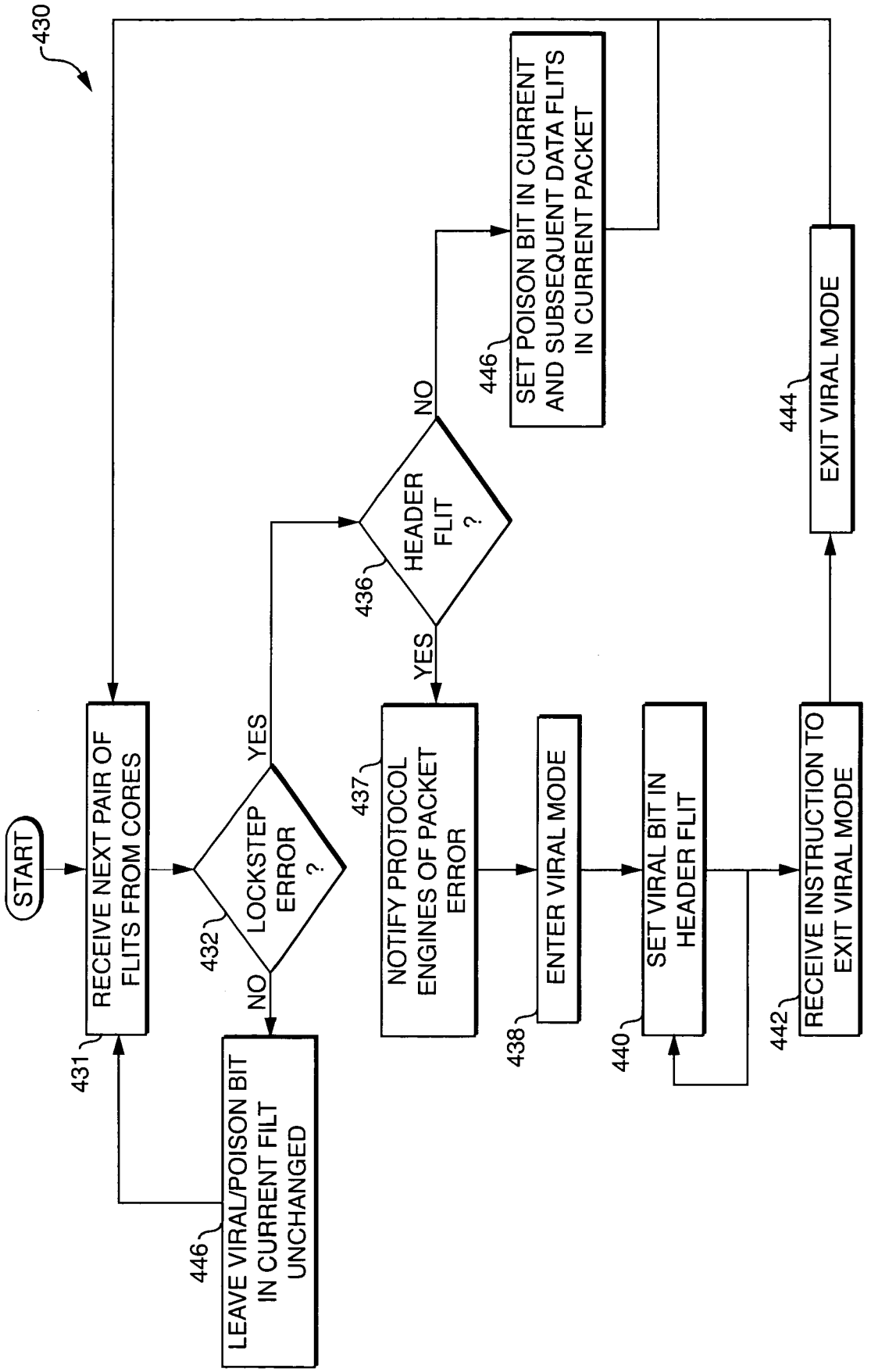
430
START
RECEIVE NEXT PAIR OF FLITS FROM CORES
431
LOCKSTEP ERROR ?
432
YES
NO
LEAVE VIRAL/POISON BIT IN CURRENT FILT UNCHANGED
446
HEADER FLIT ?
436
NO
YES
SET POISON BIT IN CURRENT AND SUBSEQUENT DATA FLITS IN CURRENT PACKET
446
NOTIFY PROTOCOL ENGINES OF PACKET ERROR
437
ENTER VIRAL MODE
438
SET VIRAL BIT IN HEADER FLIT
440
RECEIVE INSTRUCTION TO EXIT VIRAL MODE
442
EXIT VIRAL MODE
444

FIG. 4B

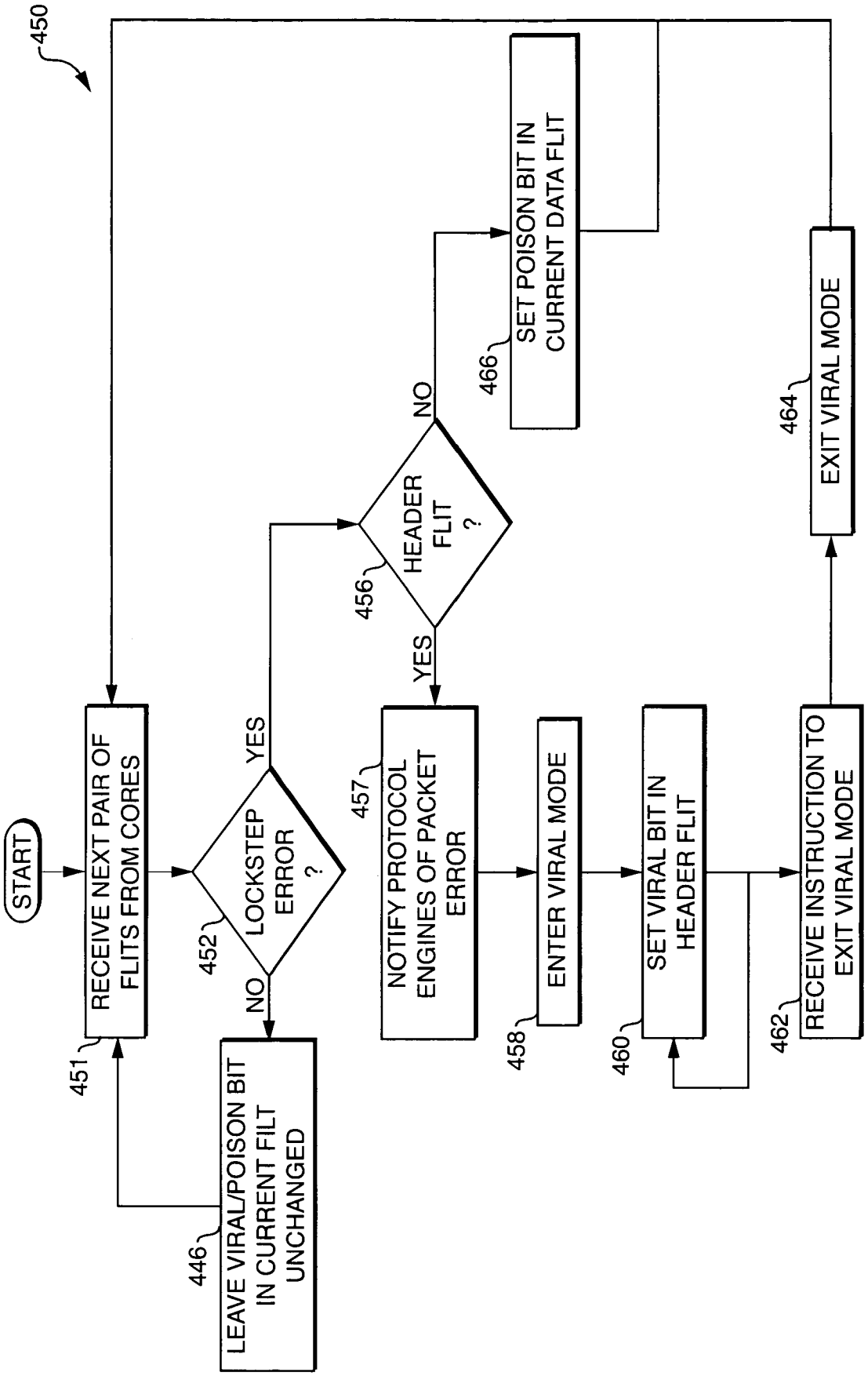
450
START
RECEIVE NEXT PAIR OF FLITS FROM CORES
451
LOCKSTEP ERROR ?
452
YES
NO
LEAVE VIRAL/POISON BIT IN CURRENT FILT UNCHANGED
446
HEADER FLIT ?
456
YES
NO
NOTIFY PROTOCOL ENGINES OF PACKET ERROR
457
SET POISON BIT IN CURRENT DATA FLIT
466
ENTER VIRAL MODE
458
SET VIRAL BIT IN HEADER FLIT
460
RECEIVE INSTRUCTION TO EXIT VIRAL MODE
462
EXIT VIRAL MODE
464

FIG. 4C

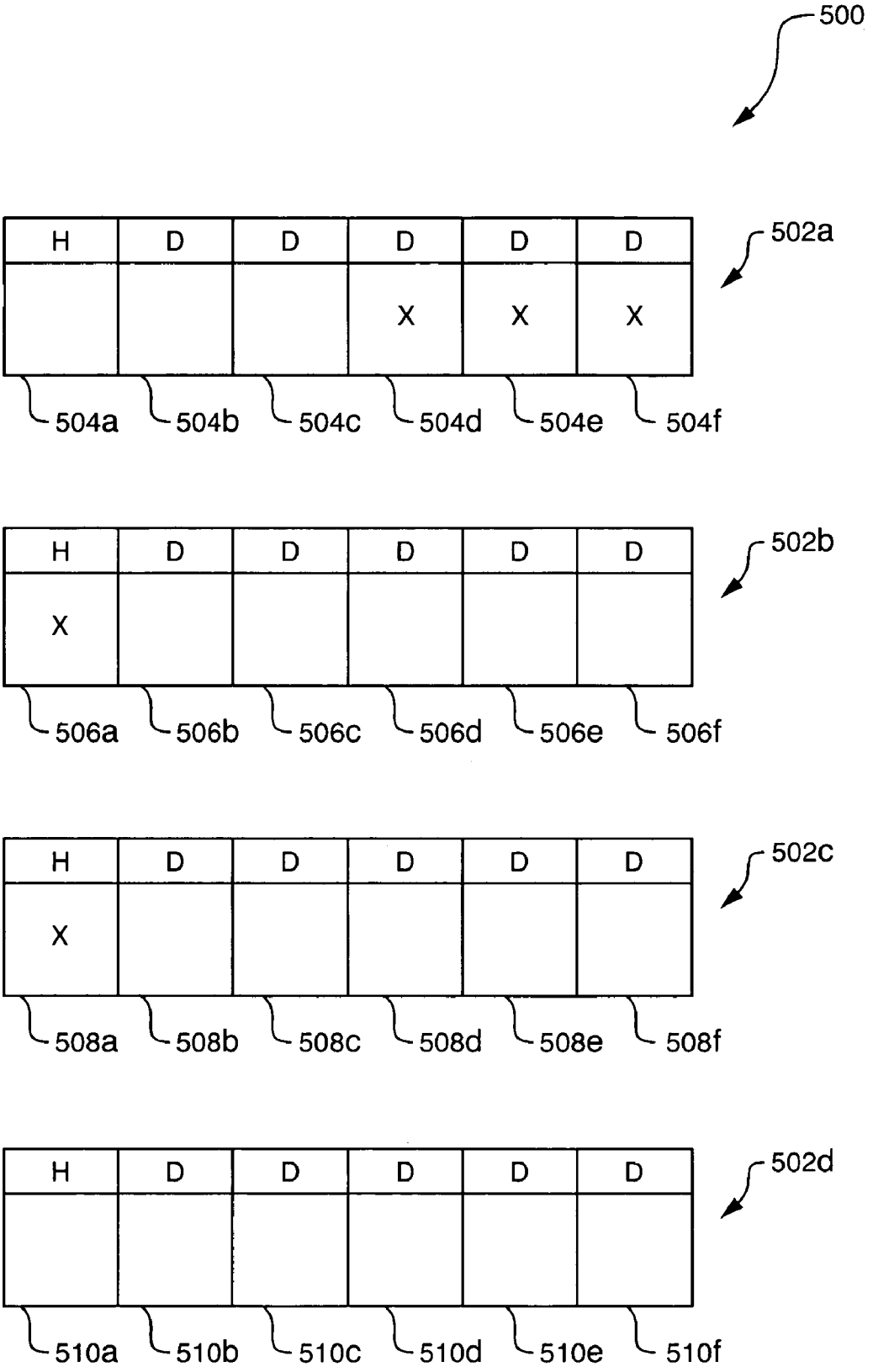
500
502a
H D D D D D
X X X
504a 504b 504c 504d 504e 504f
502b
H D D D D D
X
506a 506b 506c 506d 506e 506f
502c
H D D D D D
X
508a 508b 508c 508d 508e 508f
502d
H D D D D D
510a 510b 510c 510d 510e 510f

FIG. 5

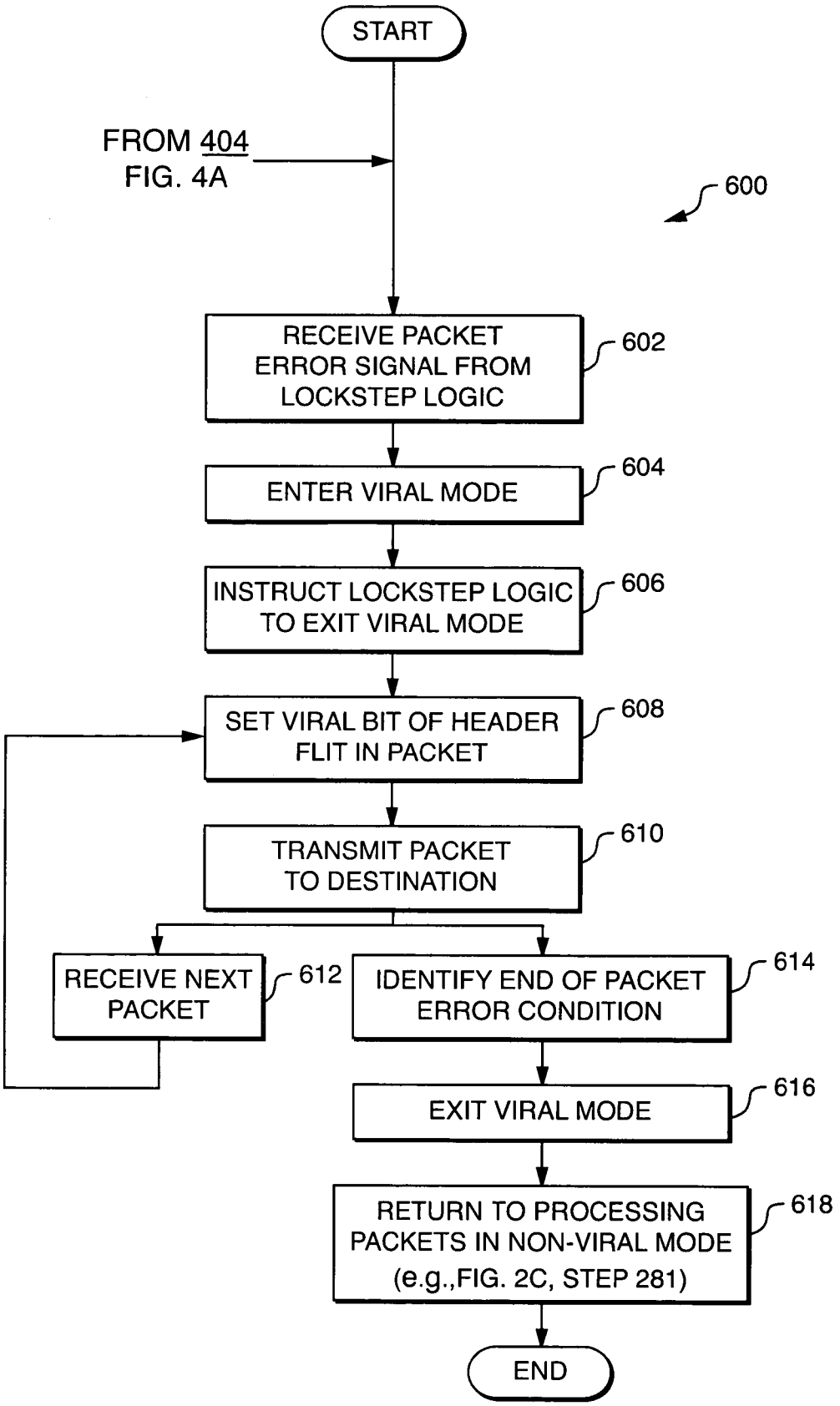
START
FROM 404
FIG. 4A
600
RECEIVE PACKET ERROR SIGNAL FROM LOCKSTEP LOGIC
602
ENTER VIRAL MODE
604
INSTRUCT LOCKSTEP LOGIC TO EXIT VIRAL MODE
606
SET VIRAL BIT OF HEADER FLIT IN PACKET
608
TRANSMIT PACKET TO DESTINATION
610
RECEIVE NEXT PACKET
612
IDENTIFY END OF PACKET ERROR CONDITION
614
EXIT VIRAL MODE
616
RETURN TO PROCESSING PACKETS IN NON-VIRAL MODE (e.g.,FIG. 2C, STEP 281)
618
END

FIG. 6

LOCKSTEP ERROR SIGNALING

CROSS REFERENCE TO RELATED APPLICATIONS

This application is related to the following concurrently-filed and commonly-owned patent applications, which are hereby incorporated by reference:

"Core-Level Processor Lockstepping," Ser. No. 10/818,975;

"Architectural Support for Selective Use of a High-Reliability Mode in a Computer System," Ser. No. 10/819,241;

"Voltage Modulation for Increased Reliability in an Integrated Circuit," Ser. No. 10/818,974;

"Lockstep Error Signaling", Ser. No. 10/818,993; and

"Off-Chip Lockstep Checking", Ser. No. 10/818,994.

BACKGROUND

The present invention relates to microprocessor design and, more particularly, to techniques for signaling errors in computer systems which implement lockstepping.

Cosmic rays or alpha particles that strike a silicon-based device, such as a microprocessor, can cause an arbitrary node within the device to change state in unpredictable ways, thereby inducing what is referred to as a "soft error." Microprocessors and other silicon-based devices are becoming increasingly susceptible to soft errors as such devices decrease in size. Soft errors are transient in nature and may or may not cause the device to malfunction if left undetected and/or uncorrected. An uncorrected and undetected soft error may, for example, cause a memory location to contain an incorrect value which may in turn cause the microprocessor to execute an incorrect instruction or to act upon incorrect data.

One response to soft errors has been to add hardware to microprocessors to detect soft errors and to correct them, if possible. Various techniques have been employed to perform such detection and correction, such as adding parity-checking capabilities to processor caches. Such techniques, however, are best at detecting and correcting soft errors in memory arrays, and are not as well-suited for detecting and correcting soft errors in arbitrary control logic, execution datapaths, or latches within a microprocessor. In addition, adding circuitry for implementing such techniques can add significantly to the size and cost of manufacturing the microprocessor.

One technique that has been used to protect arbitrary control logic and associated execution datapaths is to execute the same instruction stream on two or more processors in parallel. Such processors are said to execute two copies of the instruction stream "in lockstep," and therefore are referred to as "lockstepped processors." When the microprocessor is operating correctly (i.e., in the absence of soft errors), all of the lockstepped processors should obtain the same results because they are executing the same instruction stream. A soft error introduced in one processor, however, may cause the results produced by that processor to differ from the results produced by the other processor(s). Such systems, therefore, attempt to detect soft errors by comparing the results produced by the lockstepped processors after each instruction or set of instructions is executed in lockstep. If the results produced by any one of the processors differs from the results produced by the other processors, a fault is raised or other corrective action is taken. Because lockstepped processors execute redundant instruction streams, lockstepped systems are said to perform a "functional redundancy check."

One difficulty in the implementation of lockstepping is that it can be difficult to provide clock signals which are precisely in phase with each other and which share exactly the same frequency to a plurality of microprocessors. As a result, lockstepped processors can fall out of lockstep due to timing differences even if they are otherwise functioning correctly. In higher-performance designs which use asynchronous interfaces, keeping two different processors in two different sockets on the same clock cycle can be even more difficult.

Early processors, like many existing processors, included only a single processor core. A "multi-core" processor, in contrast, may include one or more processor cores on a single chip. A multi-core processor behaves as if it were multiple processors. Each of the multiple processor cores may essentially operate independently, while sharing certain common resources, such as a cache or system interface. Multi-core processors therefore provide additional opportunities for increased processing efficiency. In some existing systems, multiple cores within a single microprocessor may operate in lockstep with each other.

In existing systems for enabling multiple microprocessor cores to operate in lockstep, the microprocessor typically connects to a single system bus, a portion of which is shared by two or more lockstepped cores in the microprocessor. Because only one core can access the shared portion of the bus at a time in such systems, such systems typically include circuitry for arbitrating between the multiple cores and for multiplexing the data from the current "bus master" core onto the system bus. In such designs, the lockstep circuitry is typically implemented at these points of arbitration and multiplexing. Implementing lockstep circuitry in this way can be very difficult, particularly because the requirements of the bus architecture and protocol may leave very little time to perform lockstep checking. Furthermore, in such systems all data from the bus is duplicated before being transmitted to the lockstepped cores.

When a lockstep error is detected in a pair of lockstepped processor cores, it is desirable to notify the other processor cores in the system that such an error has been detected so that the other cores may disregard the output produced by the malfunctioning core or take other appropriate action. In a system in which all cores are coupled to a shared system bus, an error signal may be broadcast over the bus to all cores when a lockstep error is detected. In a link-based system, however, processor cores are connected in pairs over point-to-point links and there typically are no shared signals. As a result, typically it is not possible in such a system to use a single pin to broadcast an error message to all cores to notify them that a lockstep error has been detected. Instead, the component which identifies an error must signal the error over each point to point link, and each recipient of the error must then signal the error on each point to point link. Such error signaling can be inefficient and difficult to implement.

What is needed, therefore, are improved techniques for signaling errors in a computer system which implements lockstepping.

SUMMARY

Techniques are disclosed, for use in a computer system including a plurality of processing units coupled over a system fabric, to identify a lockstep error associated with a first packet to be transmitted over the system fabric; set a

viral indicator in the first packet to indicate the lockstep error; and transmit the modified packet over the system fabric.

Other features and advantages of various aspects and embodiments of the present invention will become apparent from the following description and from the claims.

BRIEF DESCRIPTION OF THE DRAWINGS

FIG. **1**A is a block diagram of a system for operating multiple microprocessor cores in lockstep according to one embodiment of the present invention;

FIG. **1**B is a flowchart of a method that is performed by the system of FIG. **1**A to operate in either lockstep mode or non-lockstep mode according to one embodiment of the present invention;

FIG. **2**A is a flowchart of a method that is performed by the lockstep logic of FIG. **1**A in one embodiment of the present invention;

FIG. **2**B is a flowchart of a method that is performed by lockstepped microprocessor cores in one embodiment of the present invention;

FIG. **2**C is a flowchart of a method that is performed by the protocol engines of FIG. **1**A to signal conventional packet errors and data errors according to one embodiment of the present invention;

FIG. **3** is a block diagram illustrating the lockstep logic of FIG. **1** according to one embodiment of the present invention;

FIG. **4**A is a flowchart of a method that is performed by the error detection and control engine of FIG. **3** to signal lockstep errors according to a first embodiment of the present invention;

FIG. **4**B is a flowchart of a method that is performed by the error detection and control engine of FIG. **3** to signal lockstep errors according to a second embodiment of the present invention;

FIG. **4**C is a flowchart of a method that is performed by the error detection and control engine of FIG. **3** to signal lockstep errors according to a third embodiment of the present invention;

FIG. **5** is a diagram illustrating the state of viral and poisoned bits in a packet stream produced by the lockstep logic of FIG. **1** according to one embodiment of the present invention; and

FIG. **6** is a flowchart of a method that is performed by the protocol engines of FIG. **1**A to signal lockstep errors according to one embodiment of the present invention.

DETAILED DESCRIPTION

Referring to FIG. **1**A, a block diagram is shown of a system **100** for operating multiple microprocessor cores **102***a-b* in lockstep according to one embodiment of the present invention. The cores **102***a-b* are components of a microprocessor **104**, which may have additional cores (not shown in FIG. **1**A for ease of illustration).

Cores **102***a-b* are coupled to ports **126***a-b*, respectively, of an on-chip crossbar **108**. More specifically, core **102***a* outputs data/control signals to port **126***a* on line **114***a* and receives data signals from port **126***a* on line **118***a*. Similarly, core **102***b* outputs data/control signals to port **126***b* on line **114***b* and receives data signals from port **126***b* on line **118***b*.

The system **100** also includes lockstep logic **106**, which is coupled to crossbar port **112**. Lockstep logic **106** is coupled to data/control lines **114***a-b* and data lines **118***a-b* of cores **102***a-b*, through which the lockstep logic **106** may send and receive signals to and from the cores **102***a-b*.

The system **100** may operate in either a lockstep mode or a non-lockstep mode. Referring to FIG. **1**B, a flowchart is shown of a method **150** that is performed by the system **100** in one embodiment of the present invention to operate in either lockstep mode or non-lockstep mode. Lockstep logic **106** receives, on line **130**, a lockstep enable signal which indicates whether the lockstep logic **106** is to operate in lockstep mode (step **152**). The lockstep enable line **130** may be coupled to configuration management circuitry or to any other circuitry for controlling whether the lockstep logic **106** is to operate in lockstep mode.

If the lockstep enable signal indicates that the lockstep logic **106** is to operate in lockstep mode (step **154**), the lockstep logic crossbar port **112** is enabled (step **156**), the core crossbar ports **126***a-b* are disabled (step **158**), and the lockstep logic **106** operates in lockstep mode (step **160**). Techniques that may be used by the lockstep logic **106** to operate in lockstep mode will be described in more detail below with respect to FIGS. **2**A-**2**C. The microprocessor **104** may include circuitry for enabling/disabling ports **112** and **126***a-b* using techniques that are well-known to those of ordinary skill in the art.

If the lockstep enable signal indicates that the lockstep logic **106** is to operate in non-lockstep mode (step **154**), the lockstep logic crossbar port **112** is disabled (step **162**), the core crossbar ports **126***a-b* are enabled (step **164**), and the lockstep logic **106** operates in non-lockstep mode (step **166**). When in non-lockstep mode, the lockstep logic **106** does not perform lockstep error checking on the outputs of the cores **102***a-b*, and the lockstep logic **106** does not transmit signals on lines **118***a-b* to the cores **102***a-b*, respectively. Therefore, when the lockstep logic **106** operates in non-lockstep mode (step **166**), the cores **102***a-b* communicate independently through their respective crossbar ports **126***a-b* without intervention by the lockstep logic **106**.

Referring to FIG. **2**A, a flowchart is shown of a method **200** that is performed by the lockstep logic **106** in lockstep mode according to one embodiment of the present invention. Referring to FIG. **2**B, a flowchart is shown of a method **250** that may be performed by either or both of the cores **102***a-b* in one embodiment of the present invention when the lockstep logic **106** is operating in lockstep mode. As mentioned above, the methods **200** and **250** may implement step **160** of method **150** (FIG. **1**B).

The lockstep logic **106** selects one of the cores **102***a-b* as the "master core" and the other core as the "slave core" (step **202**). Either of the cores **102***a-b* may be selected as the master or slave core. Alternatively, the selection of the master/slave may be done by external logic (such as fuses on the chip, or signals external to the chip.) The lockstep logic **106** enters lockstep mode (FIG. **2**A, step **204**). The next action taken by the lockstep logic **106** depends upon the input that the lockstep logic **106** next receives.

For example, referring to FIG. **2**B, each of the cores **102***a-b* fetches the next instruction in the core's instruction stream (step **252**), executes the instruction (step **254**), and transmits any resulting data and/or control signals to the lockstep logic **106** (step **256**). Referring to FIG. **2**A, when the lockstep logic **106** receives such data/control signals on lines **114***a-b* (step **206**), the lockstep logic **106** compares such outputs to each other (step **208**). If the outputs of both cores **102***a-b* are the same (step **210**), lockstep logic **106** provides the output of the master core to the crossbar **108** at port **112** (step **212**). The crossbar **108** in turn transmits the master core output over one of a plurality of links **110***a-f* to

a target component, such as a memory controller or another processor core (not shown), using techniques that are well-known to those of ordinary skill in the art.

When a data stream is received at port **112** from one of the links **110***a-f* at port **112** while the lockstep logic **106** is in lockstep mode, the lockstep logic **106** receives the data stream from the port **112** (step **214**), duplicates the data stream (step **216**), and transmits both copies of the data stream to cores **102***a-b* over data lines **118***a-b* (step **218**). Referring to FIG. **2**B, cores **102***a-b* receive the data from the lockstep logic **106** (step **262**) and process it (step **264**). When the lockstep logic **106** is operating in lockstep mode, each of the cores **102***a-b* performs step **264** in lockstep with the other core.

Note that although in the example just described the lockstep logic **106** receives output produced by every instruction executed by the cores **102***a-b*, this is merely an example and does not constitute a limitation of the present invention. For example, because in the example illustrated in FIG. **1**A the lockstep logic **106** only processes signals transmitted by the cores **102***a-b* on lines **114***a-b*, the lockstep logic **106** does not compare the outputs of any instructions which do not cause the cores **102***a-b* to generate signals on lines **114***a-b*. Certain instructions, such as those which can be executed by a core solely using data within the microprocessor **104** (such as data stored in registers or an on-chip cache), may not require the core to transmit any data and/or control signals on lines **114***a-b* for off-chip processing. Such instructions, therefore, may be executed without generating any signals to be compared by the lockstep logic **106**. If the cores **102***a-b*, however, are unable to complete execution of an instruction without off-chip data (such as data stored in an off-chip cache), the cores **102***a-b* may transmit messages on lines **114***a-b* (typically containing load or store instructions) which are compared by the lockstep logic **106**.

It should be appreciated that devices which communicate with cores **102***a-b* through port **112** need only send and receive a single data stream through port **112**, in the same manner as if communicating with a single processor or processor core, because the lockstep logic **106** transparently transmits data to and from the cores **102***a-b* as necessary. Using the techniques just described, therefore, the lockstep logic **106** performs lockstep checking on the cores **102***a-b* while providing the appearance of a single device coupled to port **112**.

If a soft error or other error occurs in one of the cores **102***a-b*, the outputs of the cores **102***a-b* (on lines **114***a-b*) may differ from each other. If the lockstep logic **106** determines that the core outputs on lines **114***a-b* differ from each other (in step **210**), the lockstep logic **106** exits lockstep mode and enters a mode that will be referred to herein as "lockstep error mode" (step **226**). The operation of the lockstep logic **106** while in lockstep error mode will be described in more detail below with respect to FIG. **2**C.

In one embodiment of the present invention, each of the cores **102***a-b* includes its own error-checking circuitry which checks for the occurrence of soft errors and/or other errors within the respective one of the cores **102***a-b*. Examples of such error-checking circuitry are well-known to those of ordinary skill in the art.

When the error-checking circuitry in one of the cores **102***a-b* detects an internal error, the core may transmit an error signal on the corresponding one of machine check architecture (MCA) lines **116***a-b* (FIG. **2**B, step **260**). In response to receipt of such an error signal (FIG. **2**A, step **220**), the lockstep logic **106** enters a mode that will be referred to herein as "unprotected mode" (step **222**). In brief, when in unprotected mode the lockstep logic **106** stops performing lockstep checking, ignores the output produced by the core which signaled the error, and allows the other core to communicate bidirectionally with the crossbar port **112**. The lockstep logic **106** attempts to clear the error and bring the error-producing core back into a normal mode of operation. If successful, the lockstep logic **106** returns to lockstep mode.

More specifically, when in unprotected mode the lockstep logic **106** selects the core that signaled the error as the slave core. (step **224**) and selects the other core as the master core (step **225**).

In one embodiment of the present invention, when the lockstep logic **106** is in unprotected mode, the lockstep logic **106** does not perform lockstep error checking on the outputs of the cores **102***a-b* (on lines **114***a-b*). Rather, the lockstep logic **106** enters a wait state **227** in which it awaits data from the crossbar port **112** or the master core. The lockstep logic **106** transmits all output of the master core to the crossbar port **112** (steps **228-230**) and transmits all input received at the crossbar port **112** to the master core and not to the slave core (steps **232-234**).

When in unprotected mode, the lockstep logic **106** transmits an "initiate recovery" signal to the slave core on the corresponding one of the MCA lines **120***a-b* (step **236**). In response to receipt of the "initiate recovery" signal (FIG. **2**B, step **266**), the slave core attempts to recover from the error it has experienced, such as by attempting to reset itself (step **268**). In the example illustrated in FIGS. **2**A-**2**B, it is assumed that the slave core recovers successfully and transmits a "recovery success" signal to the lockstep logic **106** on the corresponding one of the MCA lines **116***a-b* (FIG. **2**B, step **270**). In response to receiving the "recovery success" signal from the slave core (FIG. **2**A, step **238**), the lockstep logic. **106** re-enters lockstep mode (step **204**). Note that steps **236-238** may be performed concurrently with steps **227-234**, and that exiting unprotected mode causes the loop in steps **227-234** to be terminated.

Although in the example illustrated in FIGS. **2**A-**2**B, the lockstep logic **106** attempts to reset only the core from which an error signal has been received, the lockstep logic **106** may alternatively attempt to reset both cores **102***a-b* when an error signal is received from one of the cores. Furthermore, the lockstep logic **106** may reset itself **106** when an error signal has been received from one of the cores, in a further attempt to return to a mode of operation in which both cores **102***a-b* execute instructions in lockstep.

Referring to FIG. **2**C, a flowchart is shown of a method **280** that is performed by the lockstep logic **106** in response to detection of a lockstep error (FIG. **2**A, step **226**) according to one embodiment of the present invention. It can be difficult to recover from a lockstep error because typically it is not possible to determine which one of the cores **102***a-b* was responsible for the lockstep mismatch. A variety of techniques for attempting to recover from such an error, however, are well-known to those of ordinary skill in the art, such as attempting to return to some previous checkpoint and resetting both cores **102***a-b* and the lockstep logic **106**. The lockstep logic **106** may attempt to perform such a recovery (step **282**). If the recovery attempt is successful (step **284**), the lockstep logic **106** re-enters lockstep mode (FIG. **2**A, step **204**). If the recovery attempt is unsuccessful, the lockstep logic **106** signals a fatal system error (step **288**). Such an error typically requires the entire microprocessor **104** or the entire computer system **100** to be reset. Alterna-

tively, the lockstep logic **106** may simply signal a fatal system error upon entering lockstep error mode, without attempting recovery.

Cores **102***a-b* also include protocol engines **126***a-b*, respectively. Before transmitting requests (such as memory load or store requests) to the crossbar **108** (through the lockstep logic **106**), the protocol engines **126***a-b* convert such requests into packets defined according to a protocol that is compatible with the crossbar **108** and the links **110***a-f*. A single request may include a plurality of packets. When the lockstep logic **106** is in lockstep mode, the lockstep logic **106** compares the contents of each packet output by the cores **102***a-b* to verify that they are equal to each other.

More specifically, a single packet may include a plurality of "flits." In one embodiment of the present invention, for example, a packet includes a header flit containing one or more bits of data, followed by one or more data flits, also containing one or more bits of data. When the lockstep logic **106** is in lockstep mode, the lockstep logic **106** may compare each corresponding pair of flits generated by the cores **102***a-b* to verify that they are equal to each other. In other words, the comparison performed by the lockstep logic **106** in step **208** (FIG. **2**A) may be a comparison between a pair of corresponding flits output by the cores **102***a-b*.

In one embodiment of the present invention, two different kinds of lockstep error notification (signaling) are supported. Before describing such lockstep error signaling, however, techniques that may be used by the protocol engines **126***a-b* to signal conventional errors will be described. Referring to FIG. **2**C, a flowchart is shown of a method **280** that may be performed by each of the protocol engines **126***a-b* to signal conventional errors in packets received from the cores **102***a-b*. The protocol engines **126***a-b* await incoming packets from the cores **102***a-b*, respectively. Although the protocol engines **126***a-b* also process packets received from the crossbar port **112**, such packets may be processed using conventional techniques which therefore are not described herein.

One kind of error that may occur in a packet is referred to herein as a "packet error," which refers to an error in which an entire packet is corrupted or otherwise unusable. One example of such an error is an uncorrectable error in the routing table, which is used to identify the destination of a packet. When one of the protocol engines **126***a-b* receives a packet from one of the cores **102***a-b* (step **281**), the protocol engine determines whether a packet error is associated with the packet (step **282**). If there is such an error, the protocol engine enters a mode of operation referred to as "viral mode" (step **283**). Although a protocol engine may enter viral mode in response to directly identifying the existence of a packet error, a protocol engine may also enter viral mode in response to receiving a packet which has already been flagged by another protocol engine as being associated with a packet error. As will be described in more detail below, by flagging packets in this way before retransmitting them, protocol engines **126***a-b* may signal the existence of packet errors to other protocol engines.

Each header flit includes a "viral" bit which indicates the existence of a packet error. When in viral mode, the protocol engine sets the viral bit of the current packet (step **285**), transmits the packet to its destination (through the lockstep logic **106**) (step **286**), and continues to set the viral bit of the header flits in subsequent packets until the protocol engine determines that the condition which originally caused the packet error condition no longer exists (steps **285-289**).

Upon exiting viral mode, the protocol engine continues to receive additional packets and process them normally (step **281**). Note that if there is no packet error associated with a packet, the protocol engine transmits the packet to the lockstep logic **106** with a clear viral bit (step **290**). Techniques for identifying the presence or absence of packet errors are well-known to those of ordinary skill in the art. Components which receive "viral" packets may, for example, discard such packets or take other appropriate action.

The second kind of error that may occur in a packet is referred to herein as a "data error," which refers to an error in a particular packet, such as the corruption of data in the packet, which is limited to that packet and which does not affect the validity of subsequent packets. Each data flit in a packet includes a "poisoned" bit which indicates whether a data error has been detected in the data flit. Components which receive packets containing data errors may simply discard such packets.

The method **280** determines whether a data error is associated with each of the data flits in the current packet (steps **291-292**). When a data error is detected in a particular data flit, the protocol engine enters "poisoned mode" (step **293**). Note that a data error may be detected in any of the data flits within a packet, and that the protocol engine may therefore enter poisoned mode after receiving any data flit within a packet. When in poisoned mode, the protocol engine sets the poisoned bit of the current data flit (step **294**), exits poisoned mode (step **295**), and transmits the modified data flit to its destination (through the lockstep logic **106**) (step **296**). If no data error is detected in a data flit, the protocol engine simply transmits the data flit to the lockstep logic **106** without modifying the data flit's poisoned bit (step **296**). Steps **292-296** are repeated for each data flit in the packet (step **297**). Components which receive "poisoned" data flits may, for example, discard such flits or take other appropriate action.

Although in the embodiment illustrated in FIG. **2**C, the protocol engine only sets the poisoned bit of a data flit if a data error is detected in that data flit, this is merely an example and does not constitute a limitation of the present invention. Alternatively, for example, once a data error has been detected in a data flit in a packet, the protocol engine may set the poisoned bit both of that data flit and of subsequent data flits in the same packet. As yet another alternative, upon detecting a data error in a data flit, the protocol engine may set the poisoned bits of all subsequent data flits in the current packet, and then enter viral mode and thereby set the viral bits of subsequent packets.

Referring to FIG. **3**, the lockstep logic **106** is illustrated in more detail according to one embodiment of the present invention. As described above, lockstep logic **106** receives data/control signals from cores **102***a-b* on lines **114***a-b*, respectively (FIG. **2**A, step **206**). The signals on lines **114***a-b* may be slightly out of sync with each other due to differences between clock signals provided to cores **102***a-b* on clock lines **124***a-b*, respectively. Lockstep logic **106** therefore includes a synchronizer **302**, which receives as inputs both the data/control outputs of cores **102***a-b* on lines **114***a-b* and the core clock signals on lines **124***a-b*. Synchronizer **302** produces synchronized data/control signals on lines **304***a-b* using techniques that are well-known to those of ordinary skill in the art.

Lockstep logic **106** also includes an exclusive OR (XOR) gate **306**, which receives as inputs the synchronized data/control signals (on lines **304***a-b*) and performs a logical XOR operation on them to produce a "lockstep mismatch" signal on line **308** (FIG. **2**A, steps **208-210**). The lockstep mismatch signal is asserted only when the synchronized

data/control signals on line **304***a-b* are unequal to each other, thereby indicating that a soft error or other error has occurred in one of the cores **102***a-b*.

Note that the synchronized data/control signals on lines **304***a-b* are provided as data inputs to a multiplexer **312**. The output **316** of multiplexer **312** is coupled to the crossbar port **112** through staging registers **318***a-b*. A "master core select" signal is provided on line **314** to the selection input of the multiplexer **312**, thereby selecting the data/control signal on one of lines **304***a-b* for output to the crossbar port **112**.

In one embodiment of the present invention, the master core select signal is generated by an error detection and control engine **310**. The error detection and control engine **310** may, for example, be implemented as a finite state machine in a ROM or other circuitry. The error detection and control engine **310** receives as inputs: (1) the lockstep mismatch signal on line **308**; and (2) MCA signals on lines **330***a-b*. The MCA signals on lines **330***a-b* are synchronized versions of the MCA signals on lines **116***a-b* and are produced by a synchronizer **324** which is clocked by the core clock signals on lines **124***a-b*.

Engine **310** may detect when an error has occurred in cores **102***a-b* by reference to the MCA signals on lines **330***a-b*. When the error detection and control engine **310** detects such an error, the engine **310** enters unprotected mode, as described above (FIG. **2**A, step **222**). The engine **310** outputs a selection signal on line **314** which selects the data/control signal output by the master core as the output of the multiplexer **312**. The multiplexer **312** thereby transmits the data/control signal output by the master core to the crossbar port **112** through staging registers **318***a-b* (FIG. **2**A, step **212**).

The engine **310** asserts a "compare enable" signal on line **322** when the engine **310** is in lockstep mode. Both the compare enable signal and the lockstep mismatch signal on line **308** are provided as inputs to an AND gate **338**. The output of AND gate **338** is high, therefore, when the engine **310** is in lockstep mode and a lockstep error has occurred. The output of the AND gate **338** is provided as an input to a reset input of the second staging register **318***b*, thereby inhibiting the output of the staging register **318***b* when a lockstep error has occurred. This prevents the output of either of the cores **102***a-b* from being transmitted to crossbar port **112** when a lockstep error has occurred.

The purpose of staging registers **318***a-b* is to provide a delay before the output of the multiplexer **312** is provided to the crossbar port **112**. Such a delay provides time for the inhibit signal (output by the AND gate **338**) to be produced and thereby to prevent the output of the multiplexer **312** from being transmitted to the crossbar port **112** in the event that a lockstep error has occurred. Staging registers **318***a-b* may alternatively be implemented using a conventional first-in, first-out (FIFO)-type queue, or any other mechanism for introducing an appropriate delay.

When in unprotected mode (FIG. **2**A, step **222**), the engine **310** de-asserts the compare enable signal on line **322** and transmits a recovery initiation signal to the slave core on the corresponding one of MCA lines **120***a-b* (FIG. **2**A, step **236**). Note that the engine **310** produces MCA signals on lines **332***a-b*, and that synchronizer **324** synchronizes these signals to produce MCA signals on lines **120***a-b*. If the engine **310** subsequently receives a recovery success signal from the slave core on corresponding one of lines **120***a-b* (FIG. **2**A, step **238**), the engine **310** may re-enter lockstep mode (FIG. **2**A, step **204**), as described above, and re-assert the compare enable signal on line **322**.

When the lockstep logic **106** receives data from the port **112** (FIG. **2**A, step **214**), the data are transmitted on line **326** to a synchronizer **328**, which receives the core clock signals on lines **124***a-b*, and produces signals on lines **304***a-b*, respectively, which are synchronized with the clock signal (not shown) of the lockstep logic **106** itself. Synchronizer **328** duplicates the data stream on line **326** (step **216**) and provides the duplicated and synchronized data stream to cores **102***a-b* on data lines **118***a-b*, respectively (step **218**). Note that in the embodiment illustrated in FIG. **3**, the data received from crossbar port **112** is provided to both cores **102***a-b*, whether the lockstep logic **106** is operating in lockstep mode or in unprotected mode. Alternatively, the lockstep logic **106** may be configured to provide the data on line **326** only to the master core when the lockstep logic is operating in unprotected mode (FIG. **2**A, steps **232-234**).

Referring to FIG. **4**A, a flowchart is shown of a method **400** that is performed by the error detection and control engine **310** in one embodiment of the present invention to detect and signal lockstep errors in packets transmitted by the cores **102***a-b*. The engine **310** may signal such errors in conjunction with the protocol engines. **126***a-b*, as will be described in more detail below with respect to FIG. **6**.

The lockstep logic **106** receives the next pair of flits from the cores **102***a-b* (step **401**). The XOR block **306** compares the pair of flits to each other. If the XOR block **306** detects a mismatch between the two flits, the XOR block **306** asserts the lockstep mismatch signal on line **308**. The error detection and control engine **310** receives the lockstep mismatch signal on line **308** and determines whether a lockstep error has occurred based on the value of the lockstep mismatch signal (step **402**). If there is no lockstep mismatch (i.e., if the two flits are equal), the lockstep logic **106** leaves the viral/poisoned bit of the flits unchanged and forwards one of the flits to the crossbar port **112** in the manner described above (step **416**).

If there is a lockstep error, the engine **310** signals the error by modifying the flit that is being transmitted to crossbar port **112**. The kind of error signaling depends on the type of flit for which a lockstep mismatch was detected. For example, in the embodiment illustrated in FIG. **3**, staging register **318***b* is coupled to crossbar port **112** through one input of an OR gate **340**. To set the viral or poison bit in a flit, the error detection and control engine **310** transmits an appropriate signal on line **342**, which is coupled to the other input of the OR gate **340**. The OR gate **340** thereby sets the viral/poisoned bit of the output of the staging register **318***b* and transmits the resulting signal to the crossbar port **112**.

Since the output of the staging register **318***b* may be many bits wide, the OR gate **340** may be the same width as the output of the staging-register **318***b*, and the error detection and control engine **310** may output a signal on line **342** having the same width as the output of the staging register **318***b*, with the bit at the position of the viral/poison bit being set and the remaining bits being cleared. Alternatively, the single viral/poison bit of the staging register **318***b* may be provided as input to the OR gate **340**, with the remaining bits being passed straight through (with an appropriate delay) to the crossbar port **112**. The error detection and control engine **310** may then transmit a single-bit viral/poison signal on line **342**. Alternatively, the error detection and control engine **310** may transmit separate viral and poison signals on separate lines (not shown) to separate OR gates (not shown). These and other techniques for enabling the viral/poison bit of the output of the staging register **318***b* to be modified will be apparent to those having ordinary skill in the art.

Before signaling the lockstep error, the engine **310** notifies the protocol engines **126***a-b* of a packet error (step **404**), thereby causing the protocol engines **126***a-b* to enter viral mode. In general, as a result of step **404**, the protocol engines **126***a-b* will begin to set the viral bits of subsequent packets they receive. Note that even though a packet error typically is associated only with certain kinds of errors which invalidate an entire packet, in the embodiment illustrated in FIG. **4**A the protocol engines **126***a-b* are notified of a packet error regardless of the cause of the lockstep error identified in step **402**. Operation of the protocol engines **126***a-b* in viral mode in response to step **404** will be described in more detail below with respect to FIG. **6**.

The engine **310** determines whether the current flit is a header flit (step **406**). As is well-known to those having ordinary skill in the art, the engine **310** may identify the type of the current flit (e.g., header or data) by examining the contents of the current flit. If the current flit is a header flit, the engine **310** enters viral mode (step **408**), in which the engine **310** sets the viral bit of each header flit it transmits to the crossbar port **112** (step **410**).

As will be described in more detail below with respect to FIG. **6**, after the protocol engines **126***a-b* enter viral mode in response to step **404**, one or both of the protocol engines **126***a-b* instructs the lockstep logic **106** to exit viral mode. When the lockstep logic **106** receives this instruction (FIG. **4**A, step **412**), it exits viral mode (step **414**), and returns to processing incoming packets normally (i.e., without setting their viral bits), until the next lockstep error is identified. Note that the lockstep logic **106** may not exit viral mode until after all inflight packets between the protocol engines **126***a-b* and the staging registers **318***a-b* have been made viral.

Referring to FIG. **6**, a flowchart is shown of a method **600** that is performed by the protocol engines **126***a-b* according to one embodiment of the present invention in response to being notified by the lockstep logic **106** of a packet error (FIG. **4**A, step **404**). Although the method **600** will be described as being performed by one of the protocol engines **126***a-b*, the method **600** may be performed by either or both of the protocol engines **126***a-b*.

The protocol engine receives the packet error signal from the lockstep logic **106** (step **602**). In response, the protocol engines enters viral mode (step **604**). The protocol engine instructs the lockstep logic **106** to exit viral mode (step **606**). In response, the lockstep logic **106** exits viral mode at some point after receiving the instruction from the protocol engine (FIG. **4**A, step **412**).

The protocol engine sets the viral bit of the header flit in the current packet (step **608**), transmits the packet to its destination (step **610**), and continues to do so until the end of the packet error condition is identified (steps **608-614**). The protocol engine exits viral mode (step **616**) and returns to processing packets in non-viral mode (step **618**). Note that steps **604-616** of method **600** may be performed in the same manner as steps **283-289** of FIG. **2**C, with the addition of step **606**.

Note that in the above-described embodiment, both the protocol engines **126***a-b* and the error control and detection engine **310** may operate in lockstep mode at the same time for some period after the detection of the lockstep error in step **402**. During such time, both the protocol engines **126***a-b* and the error control and detection engine **310** set the viral bit of each header flit. Although this results in the viral bit of each header flit being set twice, such activity is not harmful. Furthermore, additional steps may be taken to coordinate the timing of the protocol engines **126***a-b* and the lockstep logic **106** so that the viral bit of each header flit is set by either the protocol engines **126***a-b* or the lockstep logic **106**, but not by both.

Returning to FIG. **4**A, if the identified lockstep error has occurred in a data flit, the engine **310** sets the poisoned bit in the current data flit before the data flit is transmitted to the crossbar port **112** (step **416**). Furthermore, the engine **310** sets the poisoned bits in the remaining data flits of the current packet before they are transmitted to the crossbar port **112** (step **414**).

When the header flit of the next packet is received by the lockstep logic **106** (step **418**), the engine **310** notifies the protocol engines **126***a-b* of a packet error (step **420**) in the manner described above with respect to step **404**, thereby causing the protocol engines **126***a-b* to enter viral mode and operate in the manner described above with respect to FIG. **6**. As described above, the engine **310** itself enters viral mode (step **408**) and sets the viral bit of the current header flit and of subsequent header flits (step **412**) until the engine **310** receives an instruction from one of the protocol engines **126***a-b* to exit viral mode (step **412**).

Although in the embodiment illustrated in FIG. **4**A, the detection of a lockstep error in a data flit causes the lockstep logic **106**, in conjunction with the protocol engines **126***a-b*, to set the poisoned bits in all subsequent data flits in the same packet and to set the viral bits in header flits in subsequent packets, this is not a requirement of the present invention. Referring to FIG. **4**B, for example, a flowchart is shown of a method **430** which is performed by the lockstep logic **106** to signal lockstep errors according to another embodiment of the present invention. In the embodiment illustrated in FIG. **4**B, the detection of a lockstep error in a data flit causes the poisoned bits in that data flit and in subsequent data flits in the same packet to be set, but does not cause the viral bits of header flits in subsequent packets to be set.

In accordance with the method **430**, the lockstep logic **106** receives the next pair of flits from the protocol engines (step **431**) and determines whether there is a lockstep error (step **432**) in the manner described above with respect to steps **401-402** of method **400** (FIG. **4**A). If there is no lockstep error, the lockstep logic **106** leaves the viral/poison bit in the current flit unchanged (step **446**).

If the lockstep logic **106** detects a lockstep error, the lockstep logic **106** determines whether the current flit is a header flit (step **436**). If the current flit is a header flit, the lockstep logic notifies the protocol engines **126***a-b* of a packet error (step **437**), in the manner described above with respect to step **404** (FIG. **4**A). The lockstep logic **106** then enters viral mode and operates in steps **438-444** in the same manner as in steps **408-414** of FIG. **4**A.

If there is a lockstep error and the current flit is a data flit, the lockstep logic **106** sets the poisoned bit in the current data flit and in subsequent data flits in the same packet (step **446**), and then returns to step **431**. Note that in the embodiment illustrated in FIG. **4**B, the lockstep logic **106** does not enter viral mode or instruct the protocol engines **126***a-b* to enter viral mode if a lockstep error is detected in a data flit. Rather, the lockstep logic **106** only enters viral mode and instructs the protocol engines **126***a-b* if a lockstep error is detected in a header flit.

Referring to FIG. **4**C, a flowchart is shown of a method **450** which is performed by the lockstep logic **106** to signal lockstep errors according to yet another embodiment of the present invention. In the embodiment illustrated in FIG. **4**C, the detection of a lockstep error in a data flit causes the poisoned bit in that data flit to be set, but does not cause the

poisoned bits in subsequent data flits or the viral bits of header flits in subsequent packets to be set.

Steps **451-464** of the method **450** operate in the same manner as steps **431-444** of method **430** (FIG. **4**B). When the lockstep logic **106** detects a lockstep error in a data flit, however, the lockstep logic **106** sets the poisoned bit in that data flit only (step **466**), rather than automatically setting the poisoned bits of all subsequent data flits in the same packet, as in the method **430** in FIG. **4**B. In other words, in the method **450** of FIG. **4**C, the poisoned bits of data flits are set in response to the detection of lockstep errors on a flit-by-flit basis.

One advantage of the embodiment illustrated in FIG. **4**C is that the occurrence of a data error in a particular data flit may not indicate that a lockstep error has occurred. As a result, setting the poisoned bit for only those individual data flits associated with data errors may enable the system to recover from such errors without attempting to reset the entire microprocessor **104** or one or both of the cores **102***a-b*. The techniques illustrated in FIG. **4**C may, therefore, enable the system **100** to recover from data errors more quickly and reliably than techniques which require the entire microprocessor **104** or the cores **102***a-b* to be reset.

Referring to FIG. **5**, a diagram is shown illustrating the state of viral and poisoned bits in a packet stream **500** produced by the lockstep logic **106** in one embodiment of the present invention according to the method **400** illustrated in FIG. **4**A. For purposes of example, the packet stream **500** includes four packets **502***a-d*, each of which includes a single header flit and five data flits. The techniques described herein may, however, be applied to packet streams of any length, and to packets including any number of header and data flits, including packet streams with differing lengths of both header and data flits.

Each of the flits in FIG. **5** is represented by a letter indicating the flit type ("H" for header and "D" for data), below which appears a cell indicating the state of the corresponding viral or poisoned bit. Since header flits contain a viral bit but not a poisoned bit, and data flits contain a poisoned bit but not a viral bit, a single "viral/poisoned" bit position may be used in both header and data flits. In header flits the bit at this position may be interpreted as a viral bit, while in data flits the bit at this position may be interpreted as a poisoned bit. An "X" in the cell of a header flit indicates that the viral bit of the header flit is set, while an empty cell in a header flit indicates that the viral bit of the header flit is not set. Similarly, an "X" in the cell of a data flit indicates that the poisoned bit of the data flit is set, while an empty cell in a data flit indicates that the poisoned bit of the data flit is not set.

Packet **502***a* includes header flit **504***a* and data flits **504***b-f*. Assume for purposes of example that no error condition exists upon initiation of the transmission of packet **502***a*. Asia result, the viral bit of header flit **504***c* is clear, as are the poisoned bits of data flits **504***b-c*. Assume further that a data error is detected in data flit **504***d*. As a result, the error detection and control engine **310** sets the poisoned bit of data flit **304***d* and of the remaining data flits **504***e-f* in packet **502***a* before each such flit in the packet **502***a* is transmitted to crossbar port **112**.

The engine **310** instructs the protocol engines **126***a-b* to enter viral mode (step **420**), enters viral mode itself (step **408**), and sets the viral bit in header flit **506***a* of the next packet **502***b* (step **410**). The engine **310** may optionally set the poisoned bits of data flits **506***b-f*, although this is not required, because setting the viral bit of header flit **506***a* indicates that the entire packet **502***b* is corrupted or otherwise unusable. The protocol engines **126***a-b* and/or the engine **310** further sets the viral bit in header flit **508***a* of the next packet **502***c*.

Assume that the error condition ceases at the time that data flit **508***d* is received by protocol engines **126***a-b*. The protocol engines **126***a-b* therefore detect this termination of the error condition (step **288**) and exit viral mode (step **289**) prior to the transmission of the data flit **508***d* to the crossbar port **112**. Further assume that no data or packet errors are identified in conjunction with flits **508***d-f* or **510***a-f*. As a result, the protocol engines **126***a-b* and/or the engine **310** clears the viral bit **510***a* of packet **502***d* before transmitting it to crossbar port **112**.

Note that the viral bits of header flits **506***a* and **508***a* are set because a data error was identified in data flit **504***d*, not necessarily because a packet error was identified in either or both of packets **502***b-c*. FIG. **5** thereby illustrates an example in which the detection of a data error in a data flit of one packet causes the viral bits, to be set in subsequent packets.

One advantage of techniques disclosed herein is that they enable lockstepping errors to be signaled and contained in a system which uses a crossbar or other point-to-point communication mechanism. As described above, lockstepping errors may be signaled by setting the viral and/or poisoned bits of packets in which lockstepping errors have occurred. The process of setting such viral/poisoned bits operates to signal lockstepping errors because the existing crossbar protocol already dictates that viral packets and poisoned flits be treated as error signals by components which receive them. Furthermore, lockstepping error containment is achieved by continuing to set the viral/poisoned bits of subsequent packets/flits once a lockstepping error has been identified, thereby preventing a lockstepping error from propagating to subsequent packets/flits. Finally, this containment allows identification of other components within the system **100** that were possibly affected by the lockstep mismatch.

A related advantage of techniques disclosed herein is that they make use of existing features of the crossbar communication protocol—namely, the viral and poisoned bits—to signal and contain lockstepping errors. Previously, such bits were used to signal internal errors, such as protocol errors. The use of such bits to signal lockstepping errors enables such errors to be signaled and contained with minimal modification to the existing circuitry in the system and without requiring any modification to be made to the crossbar protocol. As a result, techniques disclosed herein may be implemented relatively quickly and inexpensively.

Another advantage of the techniques disclosed herein is that they may be used in conjunction with a crossbar having asynchronous point-to-point links and thereby avoid the need to comply with the tight timing requirements typically imposed by bus-based architectures on lockstepping circuitry. In particular, the XOR gate **306** and/or the error control and detection engine **310** may introduce delays into communications over the port **112** that would not be tolerated by a conventional shared bus. As a result, the lockstep logic **106** may be implemented more quickly, easily, and inexpensively than lockstep logic intended for use with a shared bus.

A further benefit of the loosened timing requirements typically associated with crossbars is that the data from the cores **102***a-b* may be latched for an arbitrary number of clock cycles (using, for example, latches **318***a-b*) inside the lockstep logic **106**. Although such latching of data introduces a small delay when the lockstep logic **106** operates in

lockstep mode, such a delay may enable the engine **310** to be implemented more simply and thereby reduce overall design cost.

Furthermore, shared system buses typically have a large number of external pins, often numbering in the hundreds, to which components (such as lockstepping circuitry) must be coupled. Designing and implementing the wiring for such circuitry can be time-consuming and costly. The crossbar port **112**, in contrast, may have a relatively small number of bits (e.g., 32 for data and 10 for control), thereby simplifying the design and implemented of wiring for coupling the lockstep logic **106** to the port **112**.

It is to be understood that although the invention has been described above in terms of particular embodiments, the foregoing embodiments are provided as illustrative only, and do not limit or define the scope of the invention. Various other embodiments, including but not limited to the following, are also within the scope of the claims. For example, elements and components described herein may be further divided into additional components or joined together to form fewer components for performing the same functions.

Although the examples above include processor cores **102***a-b* operating in lockstep, the same techniques may be applied to processors or other circuitry operating in lockstep. The processor cores **102***a-b*, therefore, may therefore be characterized more generally as processing units.

Although the system **100** illustrated in FIG. **1** includes the crossbar **108**, the crossbar **108** is merely one example of a point-to-point communications mechanism or other switching fabric that may be used in conjunction with embodiments of the present invention. As used herein the term "point-to-point communications mechanism" refers to any mechanism for establishing point-to-point links between pairs of devices over which such devices may communicate independently of communications conducted by other devices through the point-to-point communications mechanism.

Although six links **110***a-f* are shown in FIG. **1**A, the crossbar **108** may have any number of links. The links **110***a-f* may be asynchronous with respect to the cores **102***a-b*; i.e., the links **110***a-f* and cores **102***a-b* may operate at different clock frequencies with respect to each other. Furthermore, the links **110***a-f* may be asynchronous with respect to each other. Although the lockstep logic **106** and crossbar **108** in FIG. **1**A are on the same chip as the cores **102***a-b*, this is not a requirement of the present invention.

Although the XOR gate **306** is used in the embodiment illustrated in FIG. **3** to compare the outputs of the cores **102***a-b*, the XOR gate **306** is merely one example of a comparator. More generally, any component implementing any comparison function may be used to compare the outputs of the cores **102***a-b*.

Although various connections in the embodiments illustrated herein (such as lines **114***a-b*, **116***a-b*, and **118***a-b*) may be described above as individual lines, each such connection may include any number of lines, as may be necessary or desirable to carry associated signals. Furthermore, such connections may transmit signals serially or in parallel, using any communications protocol.

The lockstep logic **106** may be implemented in custom-designed analog or digital circuitry, application-specific integrated circuits (ASICs), field-programmable gate arrays (FPGAs), computer hardware, software, or firmware, or any combination thereof.

Although in the examples above, the use of individual viral/poisoned bits is described, more generally the viral/poisoned bits are merely examples of viral/poisoned indicators. Each such indicator may, for example, include multiple bits or be encoded in any other manner.

What is claimed is:

1. In a computer system including a plurality of processing units coupled over a system fabric, a method comprising steps of:

(A) identifying a lockstep error associated with a first packet to be transmitted over the system fabric, comprising:

(A) (1) receiving the packet from a first processing core, the first packet including a first header flit;

(A) (2) receiving a second packet from a second processing core, the second packet including a second header flit;

(A) (3) comparing the first header flit to the second header flit; and

(A) (4) determining that the first header flit differs from the second header flit;

(B) setting a viral indicator in the first packet to indicate the lockstep error; and

(C) transmitting the modified packet over the system fabric.

2. The method of claim **1**, wherein the plurality of processing units comprises a plurality of processors.

3. The method of claim **1**, wherein the plurality of processing units comprises a plurality of processor cores.

4. The method of claim **1**, wherein the system fabric comprises a crossbar.

5. The method of claim **1**, wherein the step (B) comprises a step of setting the viral indicator in the first header flit.

6. The method of claim **1**, wherein the viral indicator consists of a single viral bit.

7. In a computer system including a plurality of microprocessor cores coupled over a crossbar switch, a method comprising steps of:

(A) receiving a first packet to be transmitted over the crossbar switch, the first packet including a first header flit;

(B) receiving a second packet, the second packet including a second header flit;

(C) determining whether the first header flit differs from the second header flit;

(D) if the first header flit is determined to differ from the second header flit, setting a viral bit in the first header flit to indicate a lockstep error; and

(E) transmitting the first packet over the crossbar switch.

8. A device for use in a computer system including a plurality of processing units coupled over a system fabric, the device comprising:

means for identifying a lockstep error associated with a first packet to be transmitted over the system fabric, the means for identifying comprising:

means for receiving the first packet, the first packet including a first header flit;

means for receiving a second packet, the second packet including a second header flit;

means for comparing the first header flit to the second header flit; and

means for determining that the first header flit differs from the second header flit;

means for setting a viral indicator in the first packet to indicate the lockstep error; and

means for transmitting the modified packet over the system fabric.

9. The device of claim **8**, wherein the means for setting comprises means for setting the viral indicator in the first header flit.

10. In a computer system including a plurality of processing units coupled over a system fabric, a method comprising steps of:

(A) identifying a lockstep error associated with a first packet to be transmitted over the system fabric, comprising:

(A) (1) receiving the first packet, the first packet including a first data flit;

(A) (2) receiving a second packet, the second packet including a second data flit;

(A) (3) comparing the first data flit to the second data flit; and

(A) (4) determining that the first data flit differs from the second data flit;

(B) setting a poisoned indicator in the first packet to indicate the lockstep error, and

(C) transmitting the modified packet over the system fabric.

11. The method of claim 10, wherein the plurality of processing units comprises a plurality of processors.

12. The method of claim 10, wherein the plurality of processing units comprises a plurality of processor cores.

13. The method of claim 10, wherein the system fabric comprises a crossbar.

14. The method of claim 10, wherein the step (B) comprises a step of setting the poisoned indicator in the first data flit.

15. The method of claim 10, wherein the poisoned indicator consists of a single poisoned bit.

16. In a computer system including a plurality of microprocessor cores coupled over a crossbar switch, a method comprising steps of:

(A) receiving a first packet to be transmitted over the crossbar switch, the first packet including a first data flit;

(B) receiving a second packet, the second packet including a second data flit;

(C) determining whether the first data flit differs from the second data flit;

(D) if the first data flit is determined to differ from the second data flit, setting a poisoned bit in the first data flit to indicate the lockstep error; and

(E) transmitting the first packet over the crossbar switch.

17. In a computer system including a plurality of processing units coupled over a system fabric, a method comprising steps of:

means for identifying a lockstep error associated with a first packet to be transmitted over the system fabric, the means for identifying comprising:

means for receiving the first packet, the first packet including a first data flit;

means for receiving a second packet, the second packet including a second data flit;

means for comparing the first data flit to the second data flit; and

means for determining that the first data flit differs from the second data flit;

means for setting a poisoned indicator in the first packet to indicate the lockstep error; and

means for transmitting the modified packet over the system fabric.

18. The device of claim 17, wherein the means for setting comprises means for setting the poisoned indicator in the first data flit.

19. In a computer system including a plurality of processing units coupled over a system fabric, a method comprising steps of:

(A) identifying a data error in a first data flit of a first packet to be transmitted over the system fabric; and (B) in response to identification of the data error, performing steps of:

(1) setting a poisoned indicator in the first data flit; and

(2) setting a viral indicator in a second packet to be transmitted over the system fabric.

20. The method of claim 19, wherein the first packet includes a first plurality of data flits including the first data flit, wherein the first plurality of data flits includes a second plurality of data flits occurring after the first data flit, and wherein the step (B) further comprises a step of:

(B) (3) setting poisoned indicators in the second plurality of data flits.

21. The method of claim 19, wherein the second packet comprises the next packet after the first packet in a packet stream to be transmitted over the system fabric.

22. The method of claim 19, wherein the step (B) (2) comprises a step of setting viral indicators in header flits of a plurality of packets after the first packet in a packet stream to be transmitted over the system fabric.

23. The method of claim 19, further comprising steps of:

(C) (1) transmitting the first packet over the system fabric; and

(C) (2) transmitting the second packet over the system fabric.

24. The method of claim 19, wherein the plurality of processing units comprises a plurality of processors.

25. The method of claim 19, wherein the plurality of processing units comprises a plurality of processor cores.

26. The method of claim 19, wherein the system fabric comprises a crossbar.

27. The method of claim 19, wherein the step (A) comprises steps of:

(A) (1) receiving the first packet, the first packet including the first data flit;

(A) (2) receiving the second packet, the second packet including a second data flit;

(A) (3) comparing the first data flit to the second data flit; and

(A) (4) determining that the first data flit differs from the second data flit.

28. The method of claim 19, wherein the poisoned indicator consists of a single poisoned bit, and wherein the viral indicator consists of a single viral bit.

29. In a computer system including a plurality of microprocessor cores coupled over a crossbar switch, a method comprising steps of:

(A) identifying a data error in a first data flit of a first packet to be transmitted over the system fabric, the first packet including a first plurality of data flits occurring before the first data flit and a second plurality of data flits occurring after the first data flit; and

(B) in response to identification of the data error, performing steps of:

(1) setting a poisoned bit in the first data flit;

(2) setting poisoned bits in the second plurality of data flits; and

(3) setting a viral bit in a second packet to be transmitted over the system fabric after the first packet.

30. A device for use in a computer system including a plurality of processing units coupled over a system fabric, the device comprising:

means for identifying a data error in a first data flit of a first packet to be transmitted over the system fabric; and

means for setting a poisoned indicator in the first data flit and for setting a viral indicator in a second packet to be transmitted over the system fabric in response to identification of the data error.

31. The device of claim **30**, wherein the first packet includes a first plurality of data flits including the first data flit, wherein the first plurality of data flits includes a second plurality of data flits occurring after the first data flit, and wherein the means for setting further comprises means for setting the poisoned indicators in the second plurality of data flits.

32. The device of claim **30**, wherein the means for setting comprises means for setting viral indicators in header flits of a plurality of packets after the first packet in a packet stream to be transmitted over the system fabric.

33. In a computer system including a plurality of processing units coupled over a point-to-point communications mechanism, a method comprising steps of:

(A) identifying a lockstep error associated with a first packet to be transmitted over the point-to-point communications mechanism, comprising:

(A) (1) receiving the first packet, the first packet including a first header flit;

(A) (2) receiving a second packet, the second packet including a second header flit;

(A) (3) comparing the first header flit to the second header flit; and

(A) (4) determining that the first header flit differs from the second header flit;

(B) modifying a field in the first packet to indicate the lockstep error; and

(C) transmitting the modified packet over the point-to-point communications mechanism.

34. The method of claim **33**, wherein the plurality of processing units comprises a plurality of processors.

35. The method of claim **33**, wherein the plurality of processing units comprises a plurality of processor cores.

36. The method of claim **33**, wherein the system fabric comprises a crossbar.

37. The method of claim **33**, wherein the step (B) comprises a step of setting a viral bit in the first header flit.

38. The method of claim **33**, wherein the step (A) comprises steps of:

(A) (1) receiving the first packet, the first packet including a first data flit;

(A) (2) receiving a second packet, the second packet including a second data flit;

(A) (3) comparing the first data flit to the second data flit; and

(A) (4) determining that the first data flit differs from the second data flit.

39. The method of claim **38**, wherein the step (B) comprises a step of setting a poisoned bit in the first data flit.

40. The method of claim **39**, further comprising a step of:

(D) in response to identification of the lockstep error associated with the first packet, setting a viral bit in a second packet to be transmitted over the system fabric.

41. A device for use in a computer system including a plurality of processing units coupled over a point-to-point communications mechanism, the device comprising:

means for identifying a lockstep error associated with a first packet to be transmitted over the point-to-point communications mechanism;

means for modifying a field in the first packet to indicate the lockstep error, the means for modifying comprising means for setting a viral bit in a header flit in the first packet; and

means for transmitting the modified packet over the point-to-point communications mechanism.

42. The device of claim **41**, wherein the means for modifying comprises means for setting a poisoned bit in a data flit in the first packet.

43. The device of claim **42**, wherein the means for modifying further comprises means for setting a viral bit in a header flit in a second packet to be transmitted over the system fabric.

44. A system comprising:

a first processing unit having a first output;

a second processing unit having a second output;

a system fabric having a port;

lockstep logic, coupled between the port and the first and second outputs, comprising:

means for receiving a first packet from the first output;

means for receiving a second packet from the second output;

means for modifying a field in the first packet if the first packet is not equal to the second packet, the means for modifying comprising means for setting a viral indicator in a header flit in the first packet; and

means for transmitting the first packet over the system fabric.

45. The device of claim **44**, wherein the means for modifying comprises means for setting a poisoned indicator in a data flit in the first packet.

46. The device of claim **45**, wherein the means for modifying further comprises means for setting a viral bit in a header flit in a second packet to be transmitted over the system fabric.

47. A device for use in a computer system including a plurality of processing units coupled over a point-to-point communications mechanism, the device comprising:

means for identifying a lockstep error associated with a first packet to be transmitted over the point-to-point communications mechanism;

means for modifying a field in the first packet to indicate the lockstep error, the means for modifying comprising means for setting a poisoned bit in a data flit in the first packet; and

means for transmitting the modified packet over the point-to-point communications mechanism.

48. A system comprising:

a first processing unit having a first output;

a second processing unit having a second output;

a system fabric having a port;

lockstep logic, coupled between the port and the first and second outputs, comprising:

means for receiving a first packet from the first output;

means for receiving a second packet from the second output;

means for modifying a field in the first packet if the first packet is not equal to the second packet, the means for modifying comprising means for setting a poisoned indicator in a data flit in the first packet; and

means for transmitting the first packet over the system fabric.

* * * * *

UNITED STATES PATENT AND TRADEMARK OFFICE

CERTIFICATE OF CORRECTION

PATENT NO. : 7,296,181 B2
APPLICATION NO. : 10/818993
DATED : November 13, 2007
INVENTOR(S) : Kevin David Safford et al.

It is certified that error appears in the above-identified patent and that said Letters Patent is hereby corrected as shown below:

On the face page, in field (56), under "U.S. Patent Documents", in column 1, line 2, delete "5,223,152 A 6/1993 Freymeyer et al." and insert -- 5,226,152 7/1993 Klug et al. --, therefor.

In column 13, line 54, delete "Asia" and insert -- As a --, therefor.

In column 16, line 10, in Claim 1, after "the" insert -- first --.

In column 17, line 16, in Claim 10, after "error" delete "," and insert -- ; --, therefor.

Signed and Sealed this

Tenth Day of June, 2008

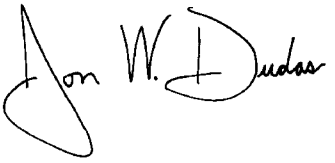

JON W. DUDAS
Director of the United States Patent and Trademark Office