US006158015A

United States Patent [19]

Klein

[11] **Patent Number: 6,158,015**

[45] **Date of Patent: *Dec. 5, 2000**

[54] **APPARATUS FOR SWAPPING, ADDING OR REMOVING A PROCESSOR IN AN OPERATING COMPUTER SYSTEM**

[75] Inventor: **Dean A. Klein**, Eagle, Id.

[73] Assignee: **Micron Electronics, Inc.**, Nampa, Id.

[*] Notice: This patent is subject to a terminal disclaimer.

[21] Appl. No.: **09/050,338**

[22] Filed: **Mar. 30, 1998**

[51] **Int. Cl.**[7] **H02H 3/05**; H03K 19/003

[52] **U.S. Cl.** **714/2**; 714/3; 714/7; 710/102

[58] **Field of Search** 714/2, 3, 7, 12, 714/14, 16, 22; 713/1, 323, 324; 710/102, 103

[56] **References Cited**

U.S. PATENT DOCUMENTS

5,295,258	3/1994	Jewett et al.	714/12
5,551,043	8/1996	Crump et al.	713/323
5,581,712	12/1996	Hermann	395/283
5,715,464	2/1998	Crump et al.	713/323
5,748,877	5/1998	Dollahite et al.	714/36
5,748,912	5/1998	Lee	395/282
5,758,174	5/1998	Crump et al.	713/323
5,838,929	11/1998	Tanikawa	395/282
5,845,060	12/1998	Vrba et al.	714/12
5,889,965	3/1999	Wallach et al.	395/283
5,964,855	11/1999	Bass et al.	710/103

Primary Examiner—Dieu-Minh T. Le
Attorney, Agent, or Firm—Park & Vaughan LLP

[57] **ABSTRACT**

One embodiment of the present invention provides a computer system that allows a processor module to be removed while the computer system is operating. This computer system includes a connector, for connecting the processor module to the computer system. It also includes a power switch coupled between a power source and the connector, for selectively removing power from the processor module in the connector while power is maintained to other components of the computer system. The computer system additionally includes a mechanism that modifies the operating system so that the computer system will continue to function without the processor module. Thus, this embodiment of the present invention allows the processor module to removed, replaced and reinitialized without shutting down the computer system.

20 Claims, 4 Drawing Sheets

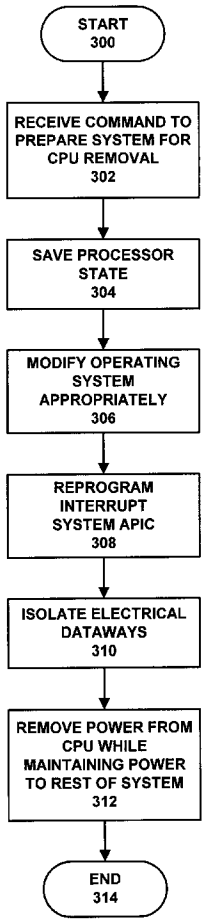

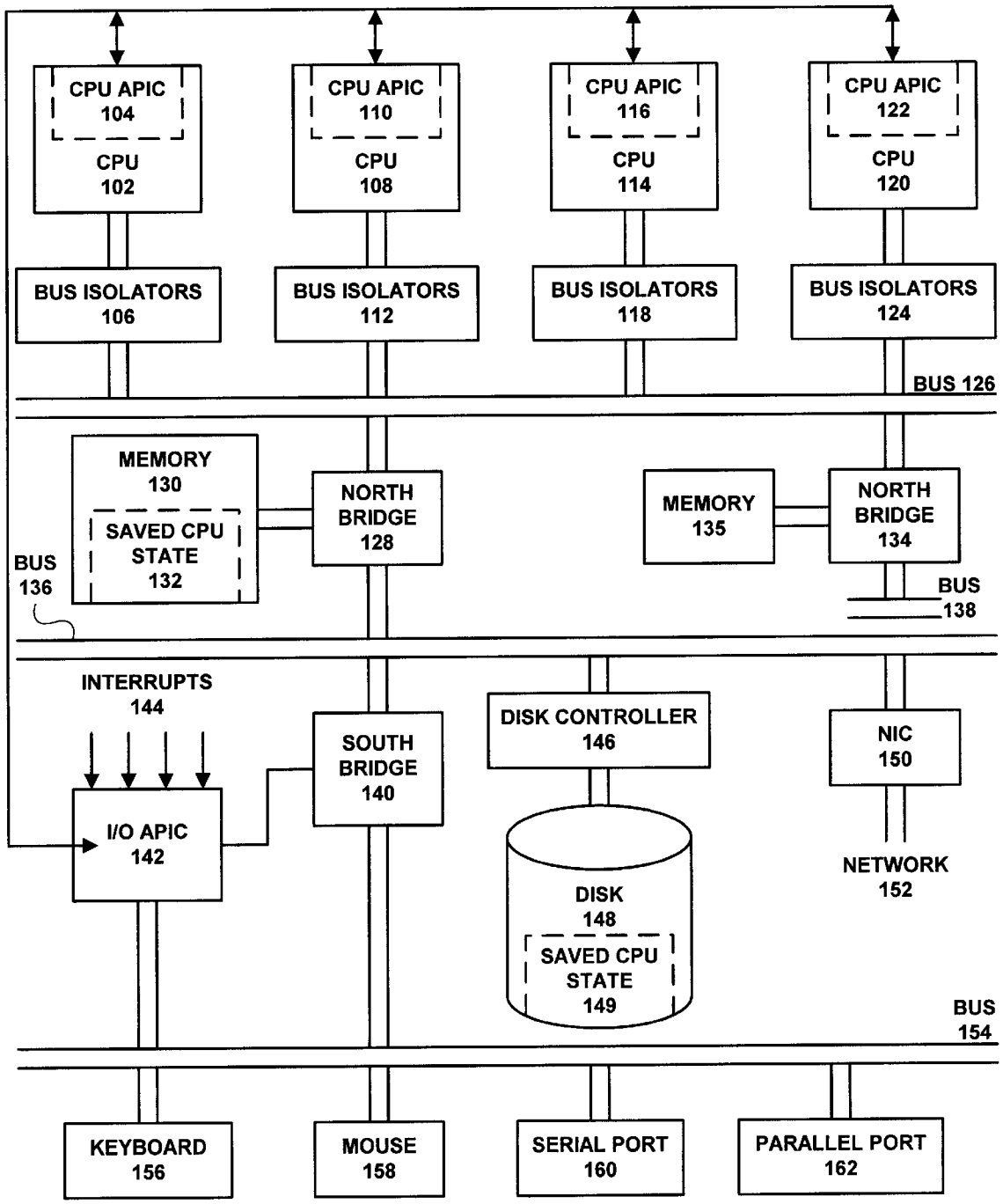
CPU APIC
104
CPU
102
CPU APIC
110
CPU
108
CPU APIC
116
CPU
114
CPU APIC
122
CPU
120
BUS ISOLATORS
106
BUS ISOLATORS
112
BUS ISOLATORS
118
BUS ISOLATORS
124
BUS 126
MEMORY
130
SAVED CPU
STATE
132
NORTH
BRIDGE
128
MEMORY
135
NORTH
BRIDGE
134
BUS
136
BUS
138
INTERRUPTS
144
SOUTH
BRIDGE
140
DISK CONTROLLER
146
NIC
150
I/O APIC
142
NETWORK
152
DISK
148
SAVED CPU
STATE
149
BUS
154
KEYBOARD
156
MOUSE
158
SERIAL PORT
160
PARALLEL PORT
162

FIG. 1

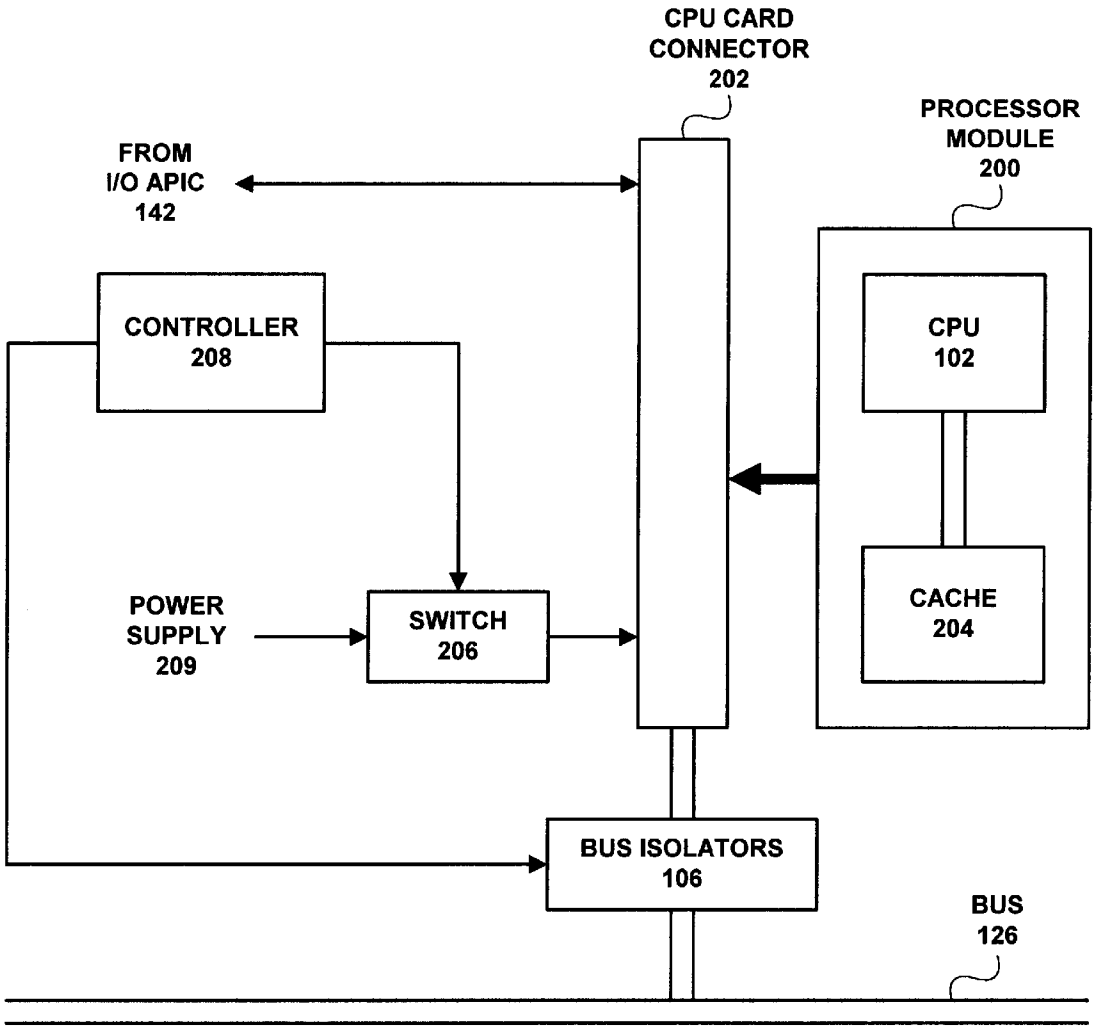
CPU CARD
CONNECTOR
202
PROCESSOR
MODULE
200
FROM
I/O APIC
142
CONTROLLER
208
CPU
102
POWER
SUPPLY
209
SWITCH
206
CACHE
204
BUS ISOLATORS
106
BUS
126

FIG. 2

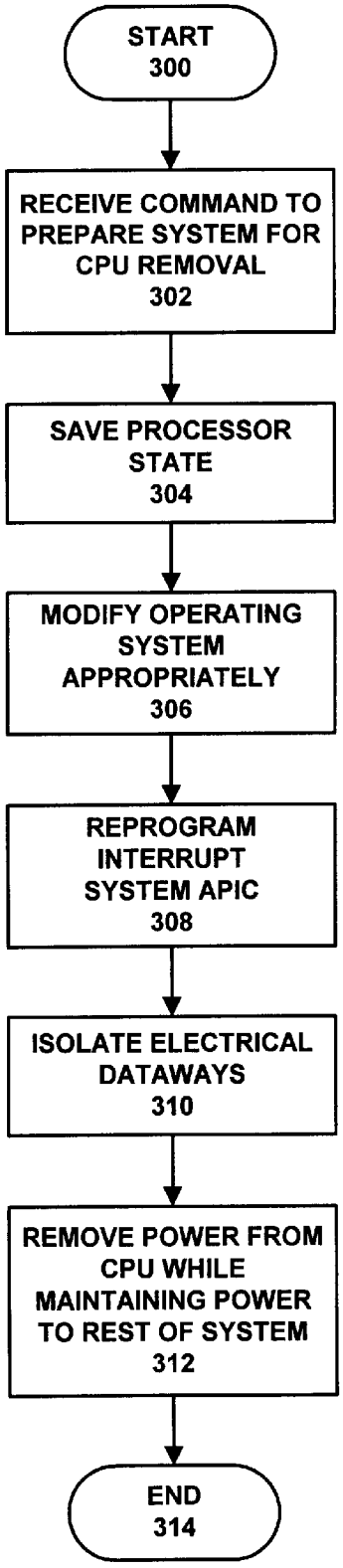
START
300
RECEIVE COMMAND TO PREPARE SYSTEM FOR CPU REMOVAL
302
SAVE PROCESSOR STATE
304
MODIFY OPERATING SYSTEM APPROPRIATELY
306
REPROGRAM INTERRUPT SYSTEM APIC
308
ISOLATE ELECTRICAL DATAWAYS
310
REMOVE POWER FROM CPU WHILE MAINTAINING POWER TO REST OF SYSTEM
312
END
314

FIG. 3

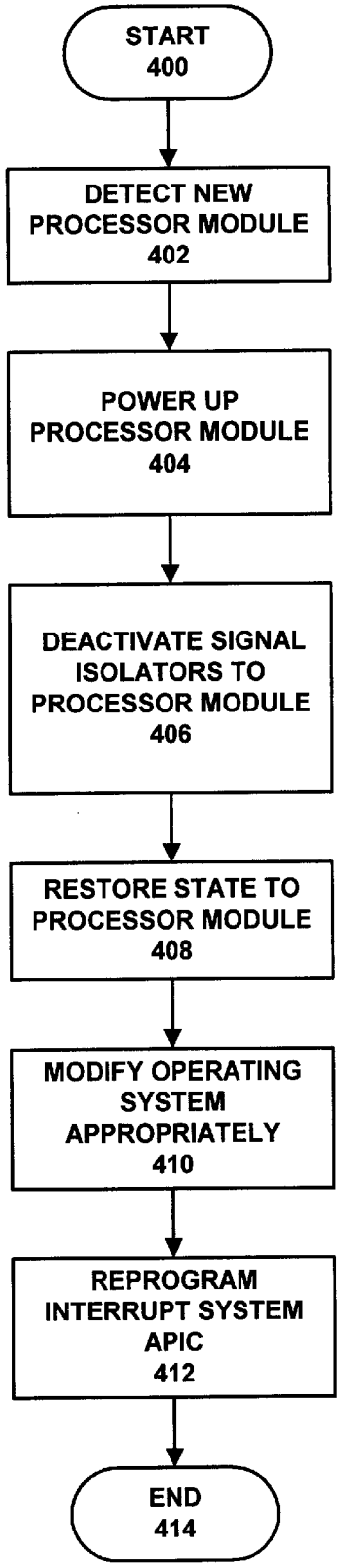
START
400
DETECT NEW PROCESSOR MODULE
402
POWER UP PROCESSOR MODULE
404
DEACTIVATE SIGNAL ISOLATORS TO PROCESSOR MODULE
406
RESTORE STATE TO PROCESSOR MODULE
408
MODIFY OPERATING SYSTEM APPROPRIATELY
410
REPROGRAM INTERRUPT SYSTEM APIC
412
END
414

FIG. 4

APPARATUS FOR SWAPPING, ADDING OR REMOVING A PROCESSOR IN AN OPERATING COMPUTER SYSTEM

RELATED APPLICATION

The subject matter of this application is related to the subject matter in U.S. patent application Ser. No. 09/050,475, filed Mar. 30, 1998, pending.

BACKGROUND

1. Field of the Invention

The present invention relates to fault tolerance in computer systems, and more particularly to an apparatus for swapping, removing or adding processors in a computer system while the computer system continues operating.

2. Related Art

Continuous operation and high reliability are essential for some computer systems. A failure, or even a temporary cessation of operation, can have catastrophic consequences for electronic fund transfer systems or airline traffic control systems, for example. To this end people have developed fault-tolerant computing systems that allow "hot swapping" of computer system components. Hot swapping involves removing and replacing a failed computer system component while the computer system continues to operate. This potentially allows a computer system with a failed component to be repaired without shutting the computer system down.

Hot swapping is typically applied to devices that plug into a computer system's peripheral bus, such as a disk drive. This allows peripheral devices to be replaced, without shutting the computer system down. However, more centrally located components, such central processing units (CPUs) cannot be replaced in this way. This is because most computer systems are uniprocessor systems with only one central processing unit. Hence, removing the central processing unit will prevent the computer system from functioning. Furthermore, CPUs are typically deeply integrated into the motherboard, or center of a computer system, and cannot easily be removed. Additionally, CPUs are harder to initialize, and are more tightly bound into the computer system's operating system and interrupt structure than are peripheral devices, such as disk drives. Consequently, it is a much harder to facilitate removal and re-insertion of a CPU in an operating computer system.

Consequently, when central processing units fail or need to be upgraded for additional performance, a computer system must be shut down to replace the CPU. Furthermore, in order to restart the computer system a lengthy rebooting process is typically required to re-initialize the operating system and other computer system components.

What is needed is a computer system that allows a CPU to be removed without shutting the computer system down.

Additionally, what is needed is a computer system that allows a CPU to be inserted and initialized while the computer system is operating.

SUMMARY

One embodiment of the present invention provides a computer system that allows a processor module to be removed while the computer system is operating. This computer system includes a connector, for connecting the processor module to the computer system. It also includes a power switch coupled between a power source and the connector, for selectively removing power from the processor module in the connector while power is maintained to other components of the computer system. The computer system additionally includes a mechanism that modifies the operating system so that the computer system will continue to function without the processor module. Thus, this embodiment of the present invention allows the processor module to removed, replaced and reinitialized without shutting down the computer system.

Another embodiment of the present invention includes a plurality of isolation buffers, for isolating electrical pathways between the processor module in the connector and the computer system.

Yet another embodiment of the present invention includes a mechanism that activates preparation of the computer system for removal of the processor module. In a variation on this embodiment, this mechanism includes a switch. In another variation, this mechanism receives a command to activate the preparation from a computer program. In yet another variation, the mechanism includes resources that detect a problem in the processor module before activating preparation of the computer system for removal of the processor module

One embodiment of the present invention includes a mechanism that saves state from the processor module to a first location in the computer system. In a variation on this embodiment, the first location includes another processor in the computer system. In another variation, the first location includes a storage area in the computer system. In yet another variation, the computer system includes a mechanism that overwrites boot code with code that restores state from the first location in the computer system.

Another embodiment of the present invention includes a mechanism that modifies an interrupt structure in the computer system so that the processor module will not receive interrupts. In a variation on this embodiment, the interrupts are redirected to another processor in the computer system.

Another embodiment of the present invention includes a mechanism that waits for a bus transaction involving the processor module to complete before preparing the computer system for removal of the processor module. Yet another embodiment includes a mechanism that waits for a computational task involving the processor module to complete before preparing the computer system for removal of the processor module.

DESCRIPTION OF THE FIGURES

FIG. **1** illustrates some of the functional components of a computer system, which provides for replacement of CPU modules while the computer system is running, in accordance with an embodiment of the present invention.

FIG. **2** illustrates some of the functional components of a connector **202** for receiving a processor module **200** in accordance with an embodiment of the present invention.

FIG. **3** is a flow chart illustrating some of the operations involved in preparing a computer system for removal of processor module **200** in accordance with an embodiment of the present invention.

FIG. **4** is a flow chart illustrating some of the operations involved in making operational a processor module that is inserted into a computer system in accordance with an embodiment of the present invention.

DEFINITIONS

Computational Task—a unit of work performed by a central processing unit in a computer system. A task may include from one to many thousands of processor instructions.

Processor Module—a removable assembly in a computer system containing a processor. This may include a processor card, a microprocessor chip, and/or a processor carrier.

DETAILED DESCRIPTION OF THE INVENTION

The following description is presented to enable any person skilled in the art to make and use the invention, and is provided in the context of a particular application and its requirements. Various modifications to the disclosed embodiments will be readily apparent to those skilled in the art, and the general principles defined herein may be applied to other embodiments and applications without departing from the spirit and scope of the present invention. Thus, the present invention is not intended to be limited to the embodiments shown, but is to be accorded the widest scope consistent with the principles and features disclosed herein.

Description of Computer System

FIG. **1** illustrates some of the functional components of a computer system, which provides for replacement of CPU modules while the computer system is running, in accordance with an embodiment of the present invention. In this embodiment, the computer system includes multiple central processing units (CPUs) **102**, **108**, **114** and **120**. CPUs **102**, **108**, **114** and **120** may be any type of computational engine in a computer system, including, but not limited to, mainframe central processing units, microprocessors or device controllers. CPUs **102**, **108**, **114** and **120** are coupled to bus **126** through bus isolators **106**, **112**, **118** and **124**. Bus **126** may be any type of bus used to coupled processors to other parts of the computer system. In one embodiment, bus **126** is a P6 bus specified by the Intel Corporation of Sunnyvale California. Bus isolators **106**, **112**, **118** and **124** provide a mechanism to selectively decouple signal lines from bus **126** to CPUs **102**, **108**, **114** and **120**. In one embodiment, bus isolators **106**, **112**, **118** and **124** are implemented with pass transistors.

Bus **126** is coupled to north bridges **128** and **134**. North bridge **128** includes circuitry to couple CPUs (**102**, **108**, **114** and **120**) to memory **130** and to bus **136**. North bridge **134** includes circuitry to couple CPUs (**102**, **108**, **114** and **120**) to memory **135** and to bus **138**. Memories **130** and **135** may be any type of memories usable to store code and data in the computer system. Memory **130** contains saved CPU state **132**, which is state saved from one of CPUs **102**, **108**, **114** and **120**, before the CPU is removed from the computer system. In one embodiment of the present invention, saved CPU state **132** includes the contents of the CPU's registers. Buses **136** and **138** may be any type of bus used to couple components of a computer system together. In one embodiment, buses **136** and **138** are PCI buses.

In the illustrated embodiment, bus **136** couples north bridge **128** to south bridge **140**, disk controller **146** and NIC **150**. Bus **138** has similar connections, which are not shown. Disk controller **146** couples disk **148** to the computer system. Disk **148** may be any type of mass storage device. This includes, but is not limited to, optical, magnetic and electronic devices for storing code and data. Disk **148** additionally includes saved CPU state **149**. This allows state saved from a CPU to be stored on disk **148** as an alternative to storing it in memory **130**. NIC (network interface controller) **150** couples the computer system to network **152**, which may be any type of local area or wide area network communicating with the computer system.

South bridge **140** may be any type of logic used to couple bus **136** to bus **154**. Bus **154** includes any type of bus that can be used to couple computer system components together. In one embodiment, this includes an ISA peripheral bus. In the illustrated embodiment, bus **154** couples the computer system to a number of peripheral devices and assorted ports, including, advanced programmable interrupt controller (APIC) **142**, keyboard **156**, mouse **158**, serial port **160** and parallel port **162**.

APIC **142** may be any type of programmable interrupt controller in a computer system. In the illustrated embodiment, APIC **142** receives a plurality of interrupt lines **144**, and communicates with corresponding CPU APICs **104**, **110**, **116** and **122** within CPUs **102**, **108**, **114** and **120**, respectively. APIC **142** includes an additional connection to south bridge **140**. During operation, APIC **142** receives the plurality of interrupts **144** and directs them to CPUs **102**, **108**, **114** and **120** for processing. In the event one of CPUs **102**, **108**, **114** and **120** is removed, CPU APIC **142** allows interrupts to be directed to the remaining CPUs in the system.

Description of Connector

FIG. **2** illustrates some of the functional components of a connector **202** for receiving a processor module **200** in accordance with an embodiment of the present invention. CPU card connector **202** is configured and disposed to receive processor module **200**. Connector **202** additionally includes signal line connectors for coupling signal lines from processor module **200** to the computer system. In one embodiment, connector **202** is in the form of a bus slot and processor module **200** is in the form of a bus card. Processor module **200** may be any type of module containing a processing engine. In the illustrated embodiment, processor module **200** includes CPU **102** (from FIG. **1**) and cache **204**. These are coupled through connector **202** and bus isolators **106** (from FIG. **1**) to bus **126** (from FIG. **1**). Connector **202** additionally includes lines from power supply **209**, which are channeled into connector **202** through switch **206**. Connector **202** also receives signals from I/O APIC **142**, which feed into CPU APIC **104** within CPU **102** (this is shown in FIG. **1**, but not in FIG. **2**). Switch **206** and bus isolators **106** are controlled by controller **208**. Controller **208** causes switch **206** and bus isolators **106** to selectively apply power and signal line connections to processor module **200**.

During operation, when processor module **200** is to be removed from the system, controller **208** causes switch **206** to remove power from processor module **200**. It also causes bus isolators **106** to remove signal connections from processor module **200**. When a new processor module is inserted into the computer system, controller **208** causes switch **206** and bus isolators **106** to restore power and signal connections to processor module **200**.

Description of Preparation for Removal of Processor Module

FIG. **3** is a flow chart illustrating some of the operations involved in preparing a computer system for removal of a processor module in accordance with an embodiment of the present invention. By way of example, suppose processor module **200** from FIG. **2** is to be removed. The system starts in state **300** and proceeds to state **302**. In state **302**, the system receives a command to prepare the system for removal of processor module **200**. In one embodiment, this command is received from a switch. In another embodiment, this command is received from a computer program. In yet another embodiment, this command is received from a mechanism within the computer system that detects a problem with the processor module and in sends a command to prepare the computer system for removal of processor module **200**.

The system next proceeds to state **304**. In state **304**, the system saves state from processor module **200**. In one

embodiment, this state includes the contents of processor registers. This state may be saved to a variety of locations. In one embodiment, this state is saved to a memory in the computer system, such as memory **130** in FIG. **1**. In another embodiment, this state is saved to a mass storage device, such as disk **148** in FIG. **1**. In yet another embodiment, this state is saved to another processor in the computer system. Another embodiment of the present invention additionally waits for a computational task or a bus transaction involving processor module **200** to complete before proceeding to state **304**.

The system next proceeds to state **306**. In state **306**, the operating system of the computer system is modified appropriately so that the computer system can continue to function without processor module **200**. Computational tasks in the run queue that would normally be allocated to processor module **200** are be redirected to other processor modules.

The system next proceeds to state **308**. In state **308**, APIC **142** is reprogrammed so that processor module **200** will not receive interrupts. In a variation on this embodiment, the interrupts directed to processor module **200** are redirected to other processor modules in the computer system.

The system next proceeds to state **310**. In state **310**, controller **208** from FIG. **2** causes the computer system to isolate electrical pathways between processor module **200** and the computer system by activating bus isolators **106**. The system next proceeds to state **312**. In state **312**, controller **208** causes switch **206** to deactivate power from processor module **200** while maintaining power to the rest of the computer system. The system next proceeds to state **314**, which is an end state.

In another embodiment of the present invention, the computer system additionally stores reboot code for processor module **200** into a location within memory **130**. This saves on subsequent reboot time because the reboot code will not have to be copied from ROM to RAM in order for a new processor module in connector **202** to be rebooted. In one embodiment, this reboot code includes instructions to restore state to processor module **200**.

Description of Operations After Insertion of a Processor Module

FIG. **4** is a flow chart illustrating some of the operations involved in making operational a processor module that is inserted into a computer system in accordance with an embodiment of the present invention. By way of example, assume processor module **200** from FIG. **2** is to be inserted into the computer system.

The system begins in state **400** and proceeds to state **402**. In state **402**, the system detects a new processor module. In one embodiment, this detection involves receiving input from a computer system operator, either through a switch or a command entered into the computer system, that processor module **200** has been inserted into the computer system. In another embodiment, this detection is performed automatically by the computer system, either through some type of sensor or a mechanism that polls connector **202**, to determine if processor module **200** is present in connector **202**.

The system next proceeds to state **404**. In state **404**, controller **208** activates switch **206** to power up processor module **200**. The system next proceeds to state **404**. In state **404**, controller **208** causes bus isolators **106** to electrically couple signal lines from processor module **200** to bus **126**. The system next proceeds to state **408**. In state **408**, the system restores state to processor module **200** from wherever the state was stored from a previous processor module in connector **202**. The system next proceeds to state **410**. In state **410**, the computer system's operating system is modified appropriately, so that computational tasks will be directed to processor module **200**. The system next proceeds to state **412**. In state **412**, APIC **142** is reprogrammed so that processor module **200** will receive interrupts. The system then proceeds to state **414**, which is an end state.

CONCLUSION

One embodiment of the present invention provides a method and an apparatus that allows a processor module to be removed from a computer system and replaced without shutting the computer system down. This allows failed processor modules to be replaced and processor modules to be upgraded, while the computer system continues to operate. Thus, the present invention can greatly improve computer system reliability.

The foregoing descriptions of embodiments of the invention have been presented for purposes of illustration and description only. They are not intended to be exhaustive or to limit the invention to the forms disclosed. Accordingly, many modifications and variations will be apparent to practitioners skilled in the art.

What is claimed is:

1. A computer system that allows a processor module to be removed while the computer system is operating, comprising:

a connector within the computer system, for connecting the processor module to the computer system;

a power switch coupled between a power source in the computer system and the connector, for removing power from the processor module in the connector, while power is maintained to other components of the computer system;

a mechanism within the computer system that modifies an operating system within the computer system, so that the computer system will continue to function without the processor module; and

a mechanism that upon receiving a command to prepare the computer system for removal of the processor module is configured to save state from the processor module to a first location in the computer system.

2. The computer system of claim **1**, further comprising a plurality of isolation buffers, for isolating electrical pathways between the processor module and the connector in the computer system.

3. The computer system of claim **1**, further comprising a mechanism within the computer system that activates preparation of the computer system for removal of the processor module.

4. The computer system of claim **3**, wherein the mechanism within the computer system that activates preparation of the computer system for removal of the processor module includes a switch.

5. The computer system of claim **3**, wherein the mechanism within the computer system that activates preparation of the computer system for removal of the processor module receives a command from a computer program.

6. The computer system of claim **3**, wherein the mechanism within the computer system that activates the preparation of the computer system for removal of the processor module detects a problem in the processor module before activating the preparation.

7. The computer system of claim **1**, wherein the first location includes another processor in the computer system.

8. The computer system of claim **1**, wherein the first location includes a storage area in the computer system.

9. The computer system of claim **1**, further comprising a mechanism within the computer system that overwrites boot

code in the computer system with code that restores state from the first location in the computer system.

10. The computer system of claim **1**, farther comprising a mechanism within the computer system that modifies an interrupt structure in the computer system so that the processor module will not receive interrupts.

11. The computer system of claim **1**, further comprising a mechanism within the computer system that modifies an interrupt structure in the computer system so that interrupts are redirected to another processor in the computer system.

12. The computer system of claim **1**, further comprising a mechanism within the computer system that waits for a bus transaction involving the processor module to complete before preparing the computer system for removal of the processor module.

13. The computer system of claim **1**, further comprising a mechanism within the computer system that waits for a computational task involving the processor module to complete before preparing the computer system for removal of the processor module.

14. A computer system that allows a processor module to be removed while the computer system is operating, comprising:

a connector within the computer system, for connecting the processor module to the computer system;

a mechanism within the computer system that activates preparation of the computer system for removal of the processor module;

wherein the mechanism that activates preparation of the computer system for removal of the processor module is configured to save state from the processor module to a first location in the computer system;

a power switch coupled between a power source in the computer system and the connector, for removing power from the processor module in the connector, while power is maintained to other components of the computer system;

a plurality of isolation buffers, for isolating electrical pathways between the processor module in the connector and the computer system; and

a mechanism within the computer system that modifies an operating system within the computer system, so that the computer system will continue to function without the processor module.

15. The computer system of claim **14**, wherein the first location includes another processor in the computer system.

16. The computer system of claim **14**, wherein the first location includes a storage area in the computer system.

17. The computer system of claim **14**, further comprising a mechanism within the computer system that overwrites boot code in the computer system with code that restores state from the first location in the computer system.

18. The computer system of claim **14**, further comprising a mechanism within the computer system that modifies an interrupt structure in the computer system so that the processor module will not receive interrupts.

19. The computer system of claim **14**, further comprising a mechanism within the computer system that waits for a computational task involving the processor module to complete before preparing the computer system for removal of the processor module.

20. A program storage device storing instructions that when executed by a computer perform a method for preparing a computer system for removal of a processor module from the computer system while the computer system is operating, comprising:

receiving a command to prepare the computer system for removal of the processor module;

saving state from the processor module to a first location in the computer system;

modifying parameters of an operating system in the computer system, so that the computer system will continue to function without the processor module; and

removing power from the processor module while maintaining power to other parts of the computer system.

* * * * *