US 20030126142A1

(19) United States

(12) Patent Application Publication (10) Pub. No.: US 2003/0126142 A1

Tu et al. (43) Pub. Date: Jul. 3, 2003

(54) MECHANISM HANDLING RACE CONDITIONS IN FRC-ENABLED PROCESSORS

(76) Inventors: **Steven J. Tu**, Phoenix, AZ (US); **Alexander J. Honcharik**, Chandler, AZ (US); **Hang T. Nguyen**, Tempe, AZ (US); **Sujat Jamil**, Chandler, AZ (US); **Quinn W. Merrell**, Fort Collins, CO (US)

Correspondence Address:
Leo V. Novakoski
BLAKELY SOKOLOFF, TAYLOR & ZAFMAN LLP
Seventh Floor
12400 Wilshire Boulevard
Los Angeles, CA 90025-1026 (US)

(21) Appl. No.: **10/039,587**

(22) Filed: **Dec. 31, 2001**

Publication Classification

(51) **Int. Cl.**[7] **G06F 7/00**

(52) **U.S. Cl.** **707/100**

(57) **ABSTRACT**

An processor includes first and second execution cores that operate in an FRC mode, an FRC check unit to compare results from the first and second execution cores, and an error check unit to detect recoverable errors in the first and second cores. The FRC check unit temporarily stores results from the first or second core, and a timer is activated if a mismatch is detected. If the error detector detects a recoverable error before the timer interval expires, a recovery routine is activated. If the timer interval expires first, a reset routine is activated.

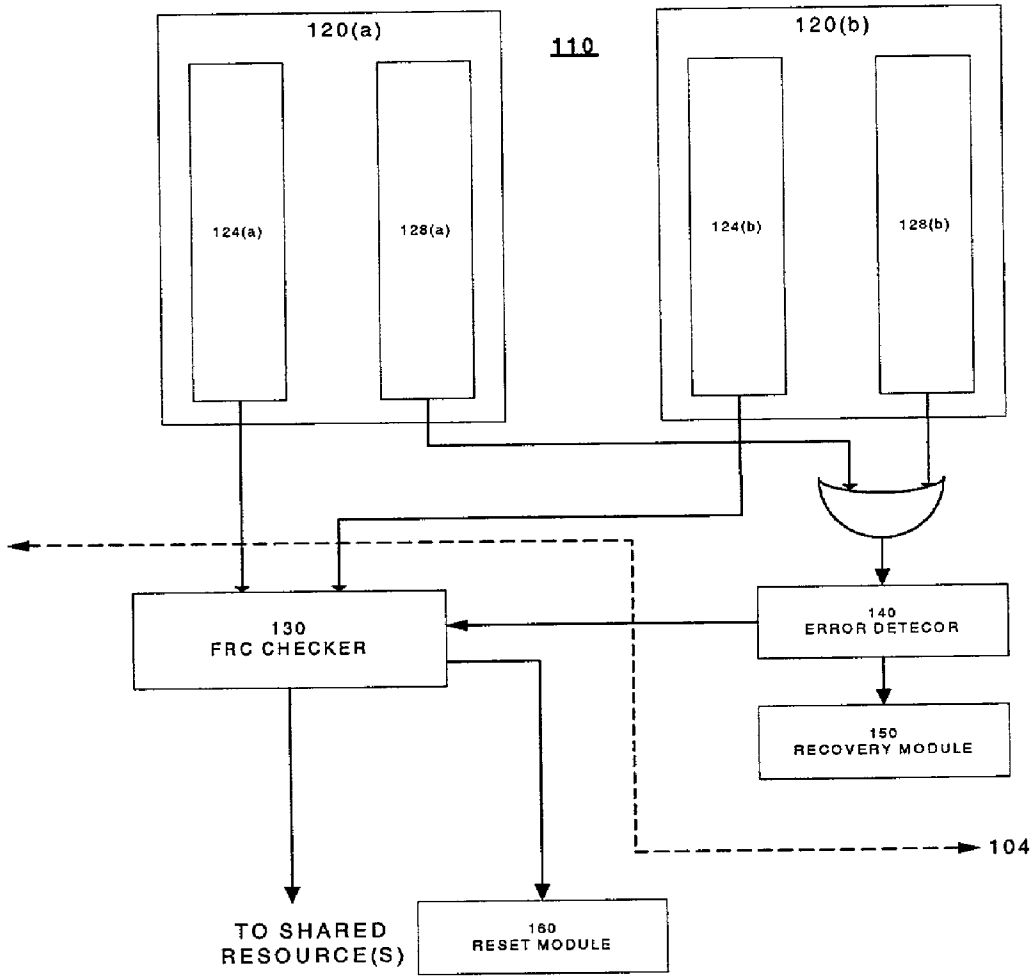

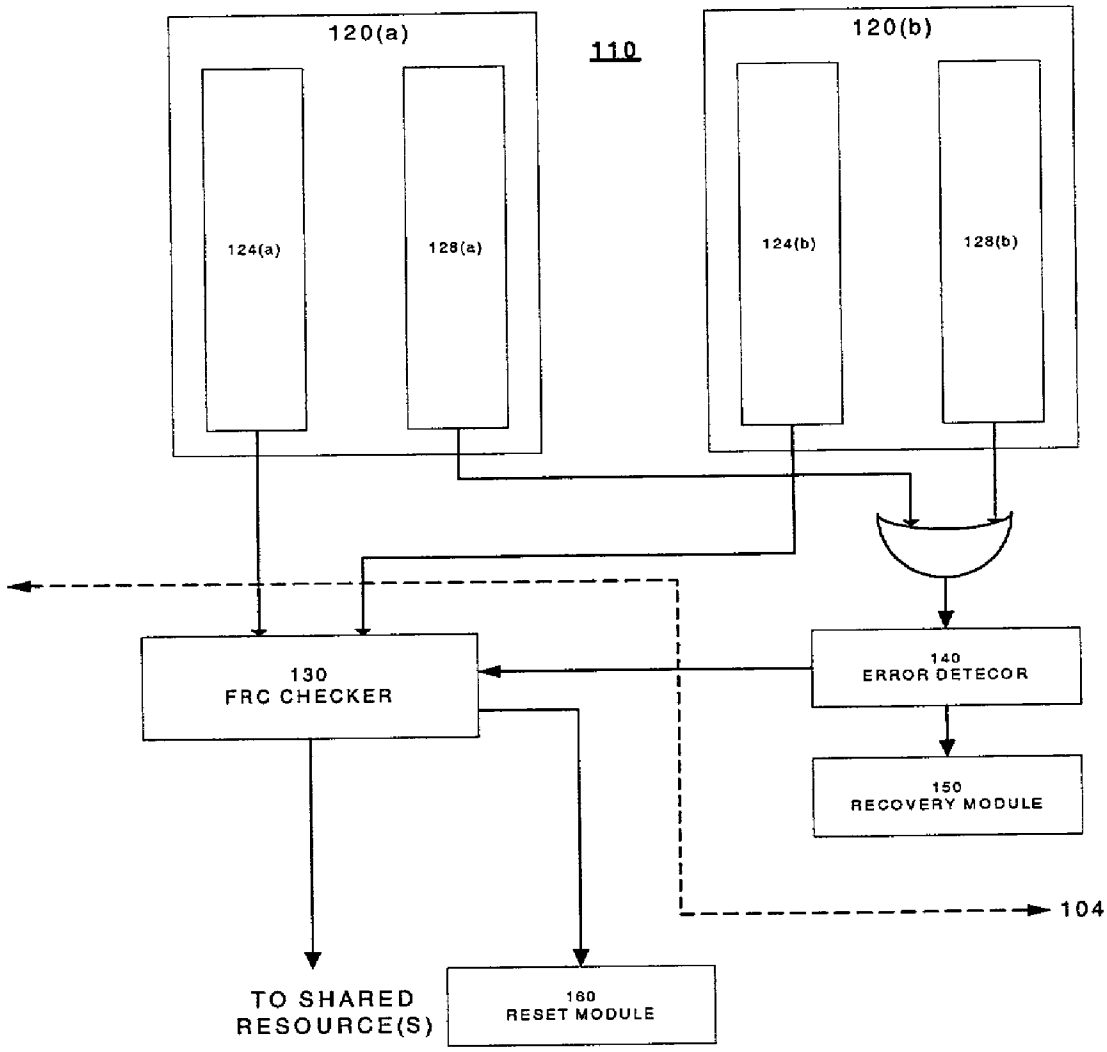
120(a)
110
120(b)
124(a)
128(a)
124(b)
128(b)
130
FRC CHECKER
140
ERROR DETECOR
150
RECOVERY MODULE
104
TO SHARED
RESOURCE(S)
160
RESET MODULE

Fig. 1

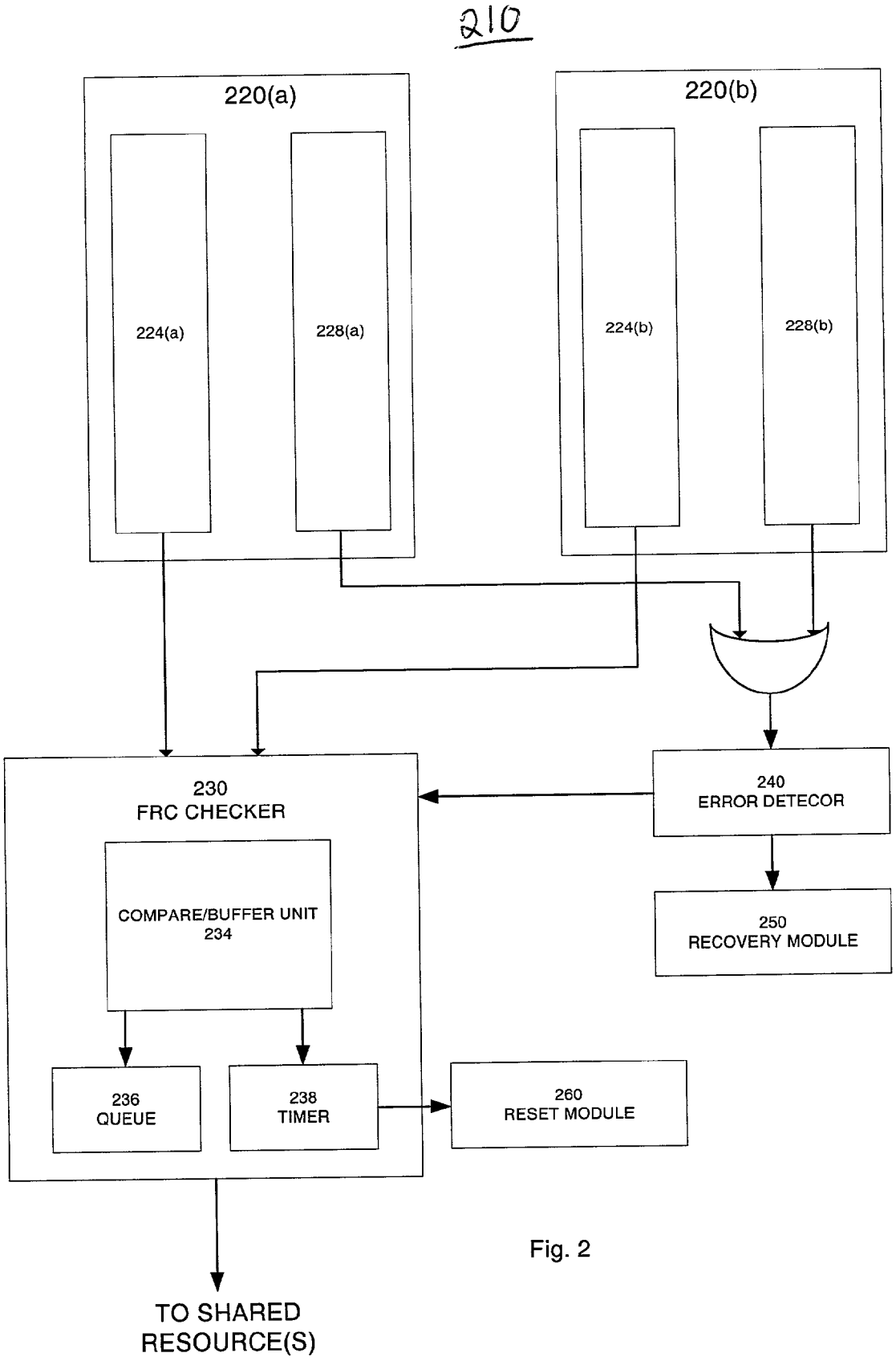
210
220(a)
224(a)
228(a)
220(b)
224(b)
228(b)
230
FRC CHECKER
COMPARE/BUFFER UNIT
234
236
QUEUE
238
TIMER
240
ERROR DETECOR
250
RECOVERY MODULE
260
RESET MODULE
TO SHARED
RESOURCE(S)

Fig. 2

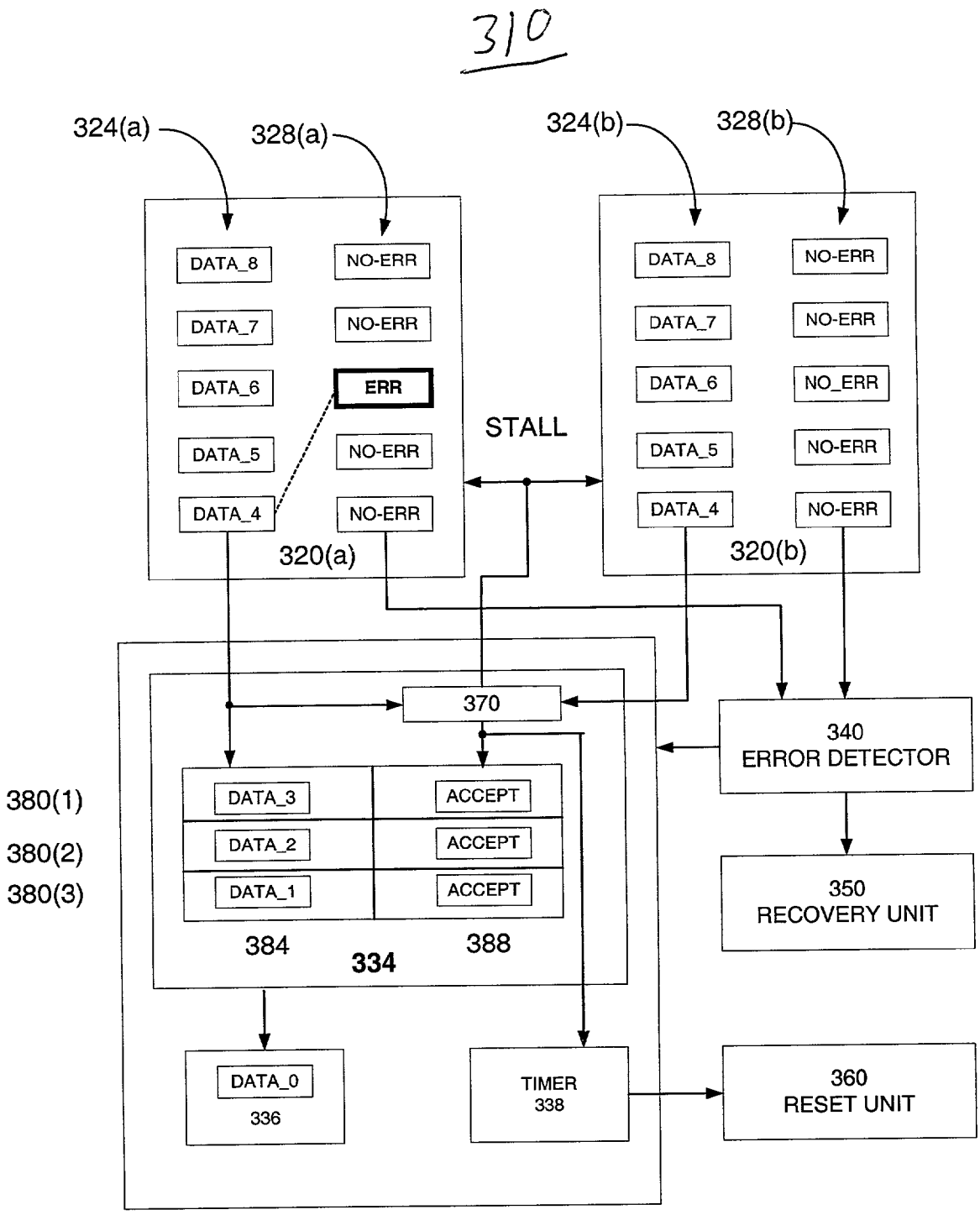
310
324(a)
328(a)
324(b)
328(b)
DATA_8
NO-ERR
DATA_7
NO-ERR
DATA_6
ERR
DATA_5
NO-ERR
DATA_4
NO-ERR
320(a)
STALL
DATA_8
NO-ERR
DATA_7
NO-ERR
DATA_6
NO_ERR
DATA_5
NO-ERR
DATA_4
NO-ERR
320(b)
370
340
ERROR DETECTOR
380(1)
380(2)
380(3)
DATA_3
ACCEPT
DATA_2
ACCEPT
DATA_1
ACCEPT
384
334
388
350
RECOVERY UNIT
DATA_0
336
TIMER
338
360
RESET UNIT

Fig. 3A

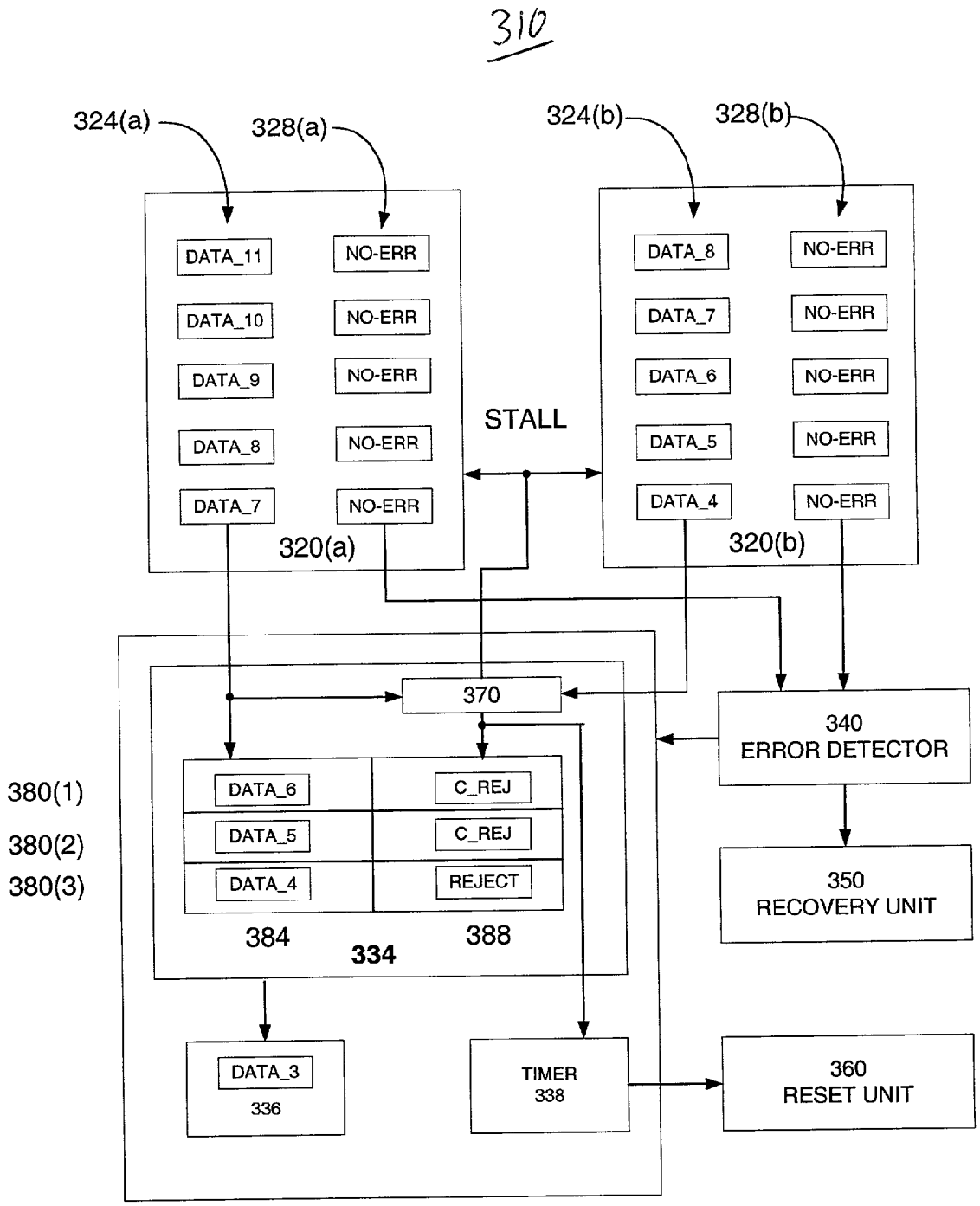
310
324(a)
328(a)
324(b)
328(b)
DATA_11
NO-ERR
DATA_10
NO-ERR
DATA_9
NO-ERR
DATA_8
NO-ERR
DATA_7
NO-ERR
320(a)
STALL
DATA_8
NO-ERR
DATA_7
NO-ERR
DATA_6
NO-ERR
DATA_5
NO-ERR
DATA_4
NO-ERR
320(b)
370
340
ERROR DETECTOR
350
RECOVERY UNIT
380(1)
380(2)
380(3)
DATA_6
C_REJ
DATA_5
C_REJ
DATA_4
REJECT
384
388
334
DATA_3
336
TIMER
338
360
RESET UNIT

Fig. 3B

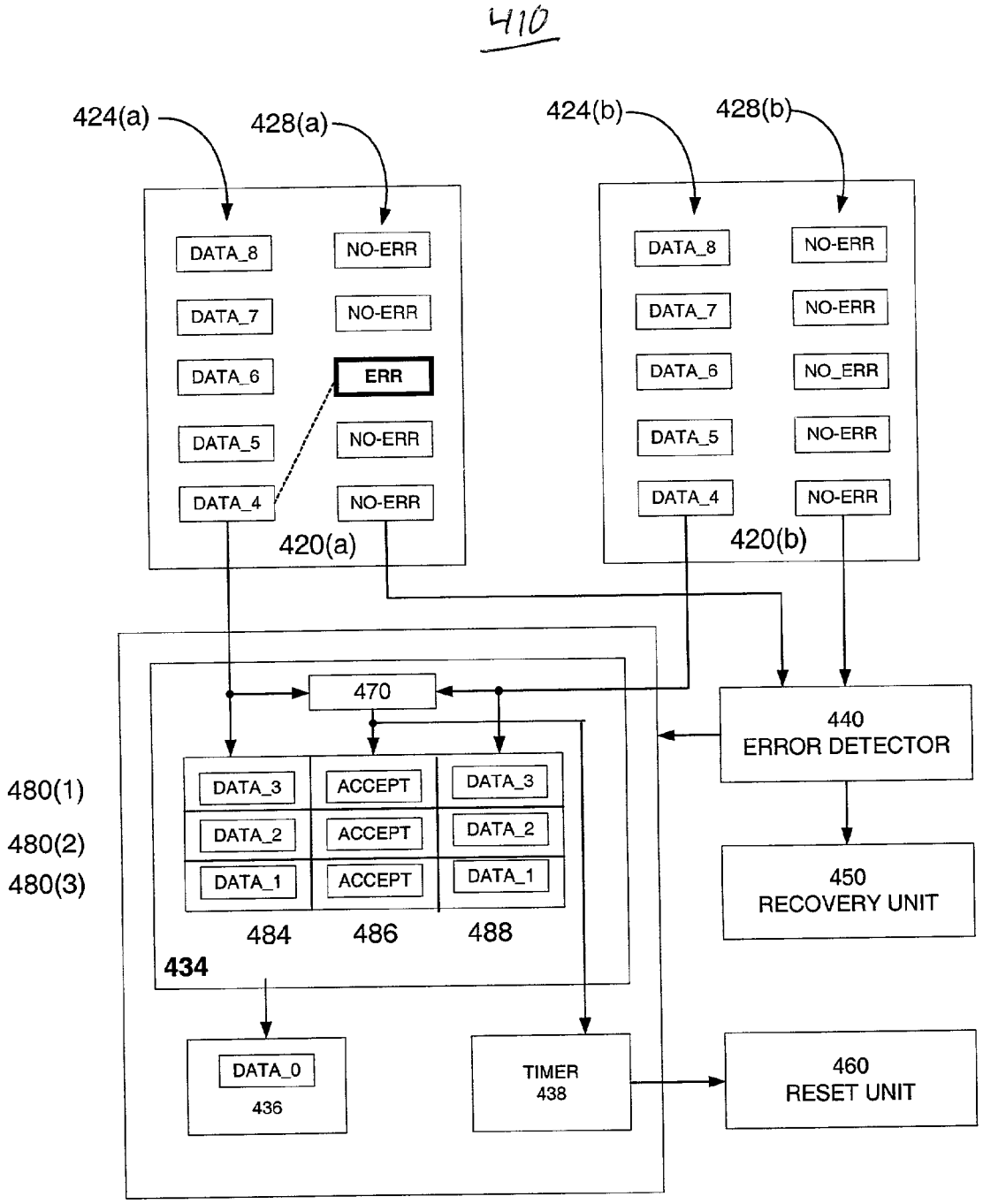
410
424(a)
428(a)
424(b)
428(b)
DATA_8
NO-ERR
DATA_7
NO-ERR
DATA_6
ERR
DATA_5
NO-ERR
DATA_4
NO-ERR
420(a)
DATA_8
NO-ERR
DATA_7
NO-ERR
DATA_6
NO_ERR
DATA_5
NO-ERR
DATA_4
NO-ERR
420(b)
470
440
ERROR DETECTOR
480(1)
480(2)
480(3)
DATA_3
ACCEPT
DATA_3
DATA_2
ACCEPT
DATA_2
DATA_1
ACCEPT
DATA_1
484
486
488
434
450
RECOVERY UNIT
DATA_0
436
TIMER
438
460
RESET UNIT

Fig. 4A

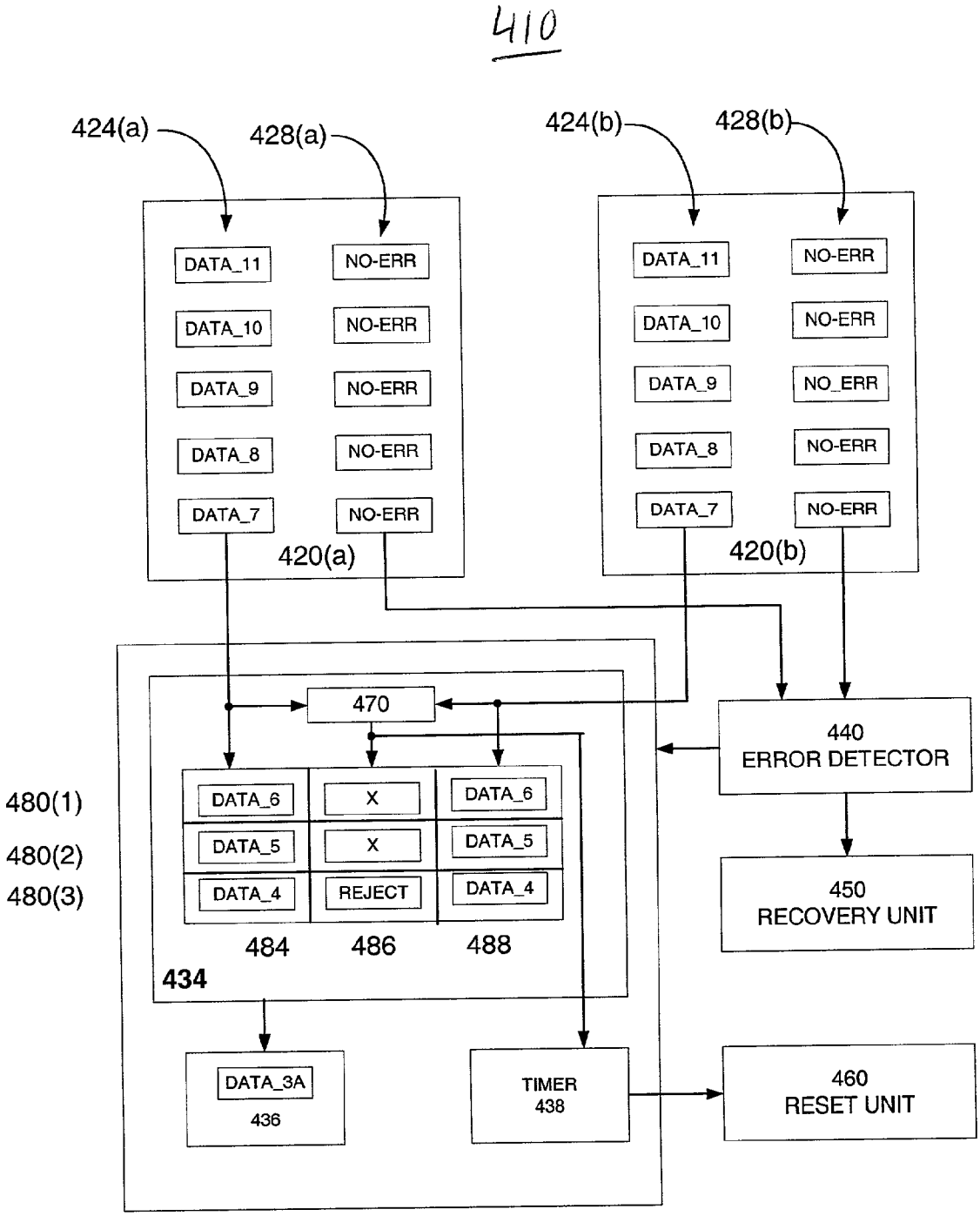
410
424(a)
428(a)
424(b)
428(b)
DATA_11
NO-ERR
DATA_10
NO-ERR
DATA_9
NO-ERR
DATA_8
NO-ERR
DATA_7
NO-ERR
420(a)
DATA_11
NO-ERR
DATA_10
NO-ERR
DATA_9
NO_ERR
DATA_8
NO-ERR
DATA_7
NO-ERR
420(b)
470
440
ERROR DETECTOR
480(1)
480(2)
480(3)
DATA_6
X
DATA_6
DATA_5
X
DATA_5
DATA_4
REJECT
DATA_4
484
486
488
434
450
RECOVERY UNIT
DATA_3A
436
TIMER
438
460
RESET UNIT

Fig. 4B

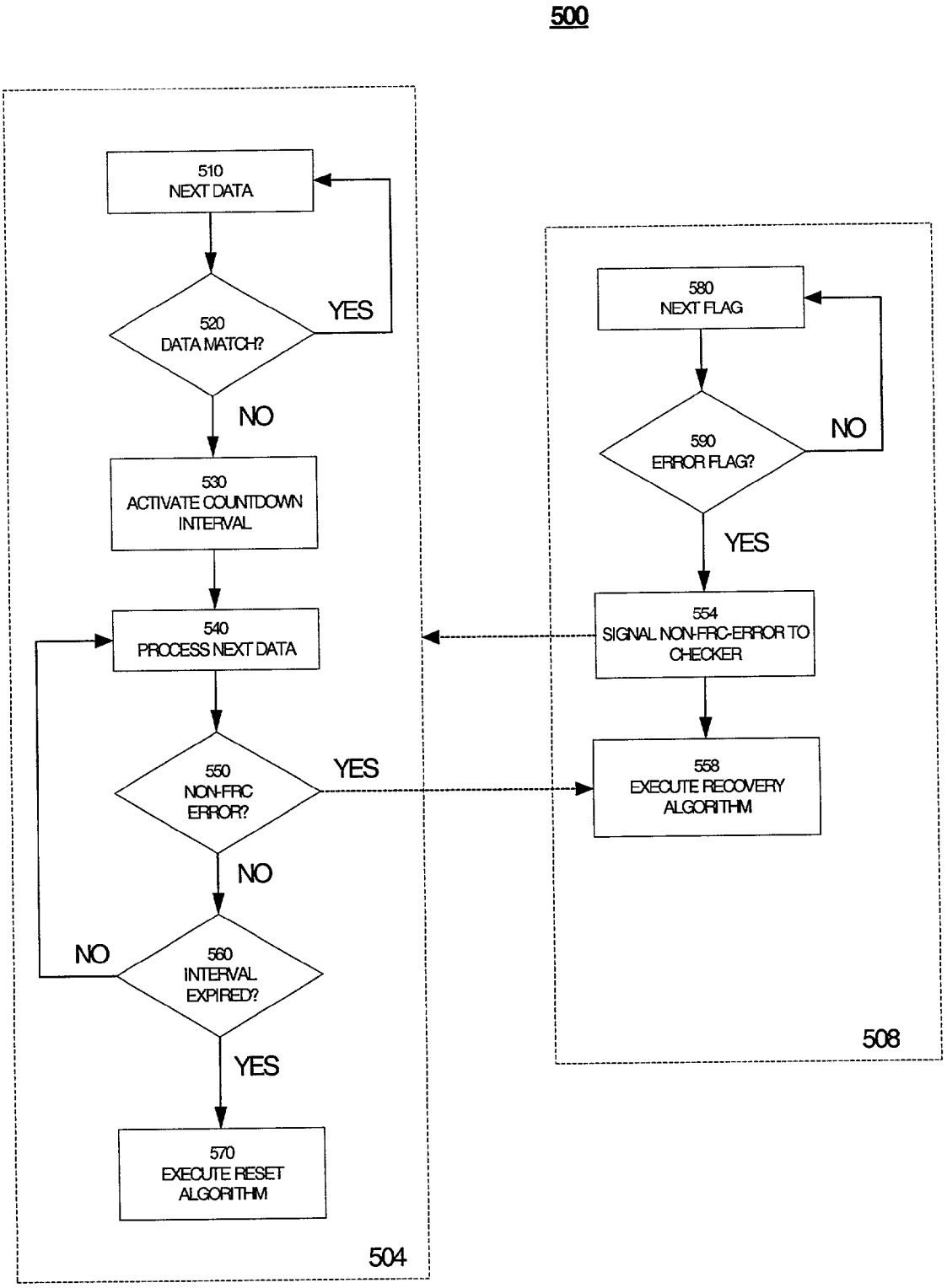
500
510
NEXT DATA
520
DATA MATCH?
YES
NO
530
ACTIVATE COUNTDOWN INTERVAL
540
PROCESS NEXT DATA
550
NON-FRC ERROR?
YES
NO
560
INTERVAL EXPIRED?
NO
YES
570
EXECUTE RESET ALGORITHM
504
580
NEXT FLAG
590
ERROR FLAG?
NO
YES
554
SIGNAL NON-FRC-ERROR TO CHECKER
558
EXECUTE RECOVERY ALGORITHM
508

Fig. 5

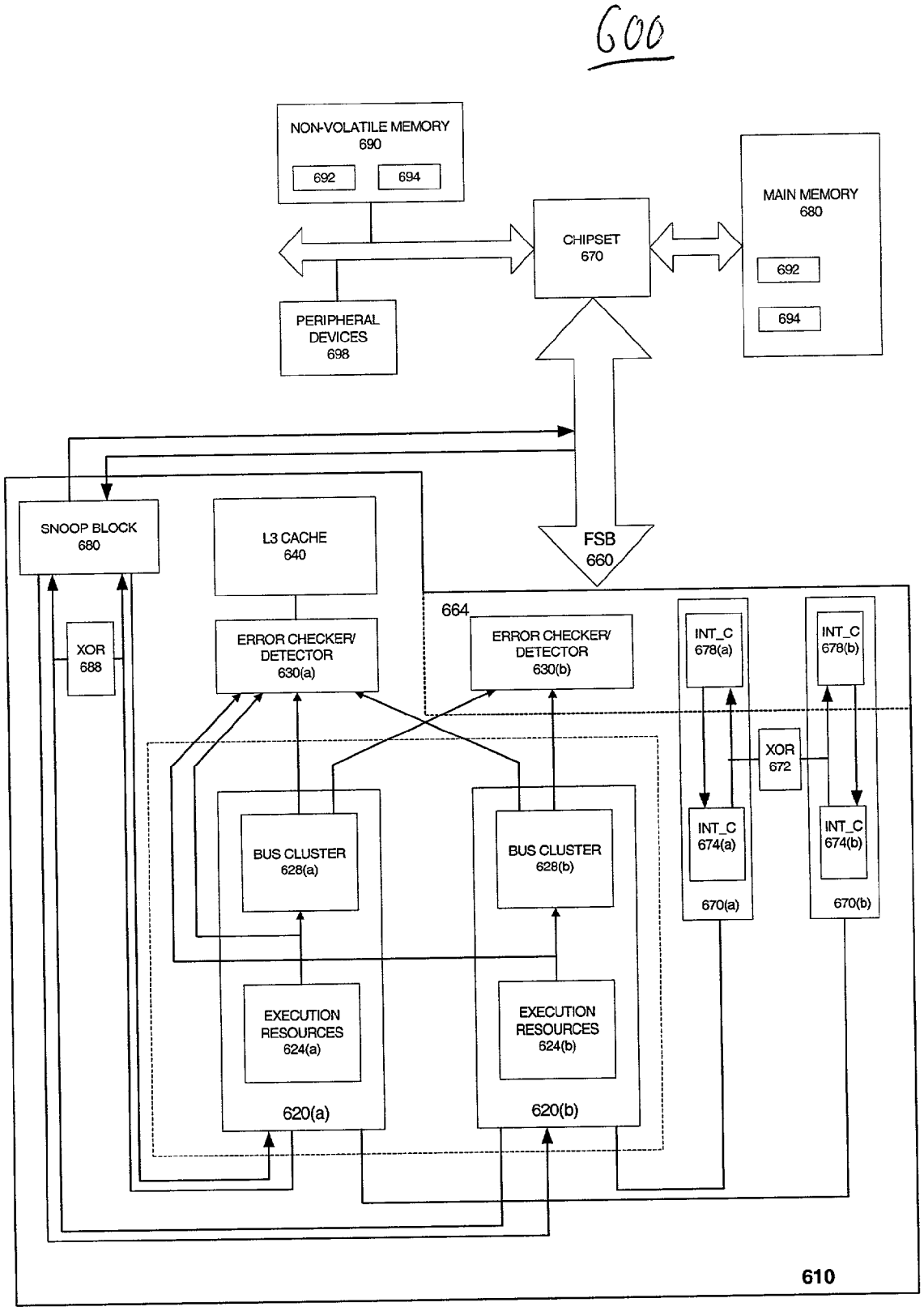
600
NON-VOLATILE MEMORY
690
692
694
MAIN MEMORY
680
692
694
CHIPSET
670
PERIPHERAL
DEVICES
698
FSB
660
SNOOP BLOCK
680
L3 CACHE
640
664
XOR
688
ERROR CHECKER/
DETECTOR
630(a)
ERROR CHECKER/
DETECTOR
630(b)
INT_C
678(a)
INT_C
678(b)
XOR
672
BUS CLUSTER
628(a)
BUS CLUSTER
628(b)
INT_C
674(a)
INT_C
674(b)
670(a)
670(b)
EXECUTION
RESOURCES
624(a)
EXECUTION
RESOURCES
624(b)
620(a)
620(b)
610

Fig. 6

MECHANISM HANDLING RACE CONDITIONS IN FRC-ENABLED PROCESSORS

BACKGROUND OF THE INVENTION

[0001] 1. Technical Field

[0002] The present invention relates to microprocessors and, in particular, to mechanisms for handling errors in FRC-enabled processors.

[0003] 2. Background Art

[0004] Servers and other high-end computer system are designed to provide high levels of reliability and availability. Soft errors pose a major challenge to both of these properties. Soft errors result from bit-flipping collisions between high-energy particles, e.g. alpha particles, and charge storing nodes. They are prevalent in storage arrays, such as caches, TLBs, and the like, which include large numbers of charge storing nodes. Rates of occurrence of soft errors (soft error rates or SERs) will only increase as device geometry decreases and device densities increase.

[0005] Highly reliable systems include safeguards to detect and manage soft errors, before they lead to silent, e.g. undetected, data corruption (SDC). However, to the extent error detection/handling mechanisms take a system away from its normal operations, the system's availability is reduced.

[0006] One well-known mechanism for detecting soft errors is functional redundancy checking (FRC). An FRC-enabled processor includes replicated instruction execution cores on which the same instruction code is run. Depending on the particular embodiment, each replicated execution core may include one or more caches, register files and supporting resources in addition to the basic execution units (integer, floating point, load store, etc.). FRC-hardware compares results generated by each core, and if a discrepancy is detected, the FRC system jumps to an error-handling routine. Since FRC errors indicate only that the execution cores disagree on a result, the error handling routine typically unwinds execution to the last know point of reliable data and resets the processor. This reset mechanism is relatively time consuming.

[0007] The point(s) at which results from different execution cores are compared represent the FRC-boundary for the system. Errors that are not detected at the FRC boundary can lead to SDC, but even managing detected FRC errors can create its own problems. As noted above, time spent by the system handling FRC-errors takes the system away from its normal operation, reducing system availability.

[0008] FRC is only one mechanism for handling soft errors, and for random logic, it is the primary mechanism. Array structures present a different picture. Array structures typically include parity and/or ECC hardware to detect soft errors. ECC hardware can even correct single bit errors on the fly. Further, unlike FRC errors, which only indicate that one of the execution cores generated an error, parity/ECC errors are clearly tied to one of the execution cores by the logic that detects them.

[0009] If a parity/ECC error in an execution core is detected before the corrupted data reaches the FRC boundary, the execution core that has the good, i.e. uncorrupted, data can be identified and used to recover from the error. If the corrupted data reaches the FRC boundary before the underlying parity/ECC error is detected, an FRC error will be generated, and the system will be unavailable while the FRC error is addressed. There is thus a race between the logic that processes the corrupted data towards the FRC boundary and the logic that detects its corrupted state. This race can have a significant impact on system availability, due to the longer latency of the reset mechanism triggered by an FRC-error (data mismatch) relative to the recovery mechanism triggered by an underlying parity/ECC error.

[0010] The present invention address these and other problems associated with error handling in FRC-enabled processors.

BRIEF DESCRIPTION OF THE DRAWINGS

[0011] The present invention may be understood with reference to the following drawings, in which like elements are indicated by like numbers. These drawings are provided to illustrate selected embodiments of the present invention and are not intended to limit the scope of the invention.

[0012] **FIG. 1** is a block diagram of an FRC-enabled processor that includes dual execution cores and FRC-detection and handling logic.

[0013] **FIG. 2** is a block diagram of one embodiment of an FRC-enabled processor that implements an error-detection and handling system in accordance with the present invention.

[0014] **FIGS. 3A and 3B** are block diagrams representing the states of one embodiment of the FRC-checker of **FIG. 2** at two different times.

[0015] **FIGS. 4A and 4B** are block diagrams representing the states of another embodiment of FRC-checker of **FIG. 2** at two different times.

[0016] **FIG. 5** is a flowchart representing one embodiment of a method **500** for handling race conditions in FRC-enabled systems in accordance with the present invention.

[0017] **FIG. 6** is a block diagram of one embodiment of a computer system that implements an error handling system in accordance with the present invention.

DETAILED DESCRIPTION OF THE INVENTION

[0018] The following discussion sets forth numerous specific details to provide a thorough understanding of the invention. However, those of ordinary skill in the art, having the benefit of this disclosure, will appreciate that the invention may be practiced without these specific details. In addition, various well-known methods, procedures, components, and circuits have not been described in detail in order to focus attention on the features of the present invention.

[0019] **FIG. 1** is a block diagram representing an FRC-enabled processor **110**. Processor **110** includes first and second execution cores **120**(*a*), **120**(*b*) (generically, execution core **120**), an FRC checker **130**, an error detector **140**, a recovery unit **150**, and reset unit **160**. A portion of the FRC-boundary is indicated by dashed line **104**. For purposes of illustration, recovery unit **150** and reset unit **170** are shown as part of processor **110**, but portions of these units

may be implemented as firmware or software modules that are located off of the processor die.

[0020] Each execution core **120** includes a data pipeline **124** and an error pipeline **128** that feed into FRC checker **130** and error detector **140**, respectively. Data pipeline **124** represents the logic that operates on various types of data as it moves through processor **110** toward FRC checker **130**. The data represented by data pipeline **124** may include result operands, status flags, addresses, instructions and the like that are generated and staged through processor **110** during code execution. Error pipeline **128** represents the logic that operates on various types of data to detect errors in the data and provide appropriate error signals to error detector **140**. For example, the error signals may be one or more bits (flags) representing the parity or ECC status of data retrieved from various storage arrays (not shown) of processor **110**. Soft errors in these arrays may appear as parity or ECC error flags when the corrupted data is accessed.

[0021] If an error reaches error detector **140** from either core **120**, recovery unit **160** is activated to implement a recovery routine. Recovery can be effected with relatively low latency by hardware, software, firmware or some combination of these. For example, there is an extremely small probability that the same data is corrupted in both execution cores **120**, which leaves an uncorrupted copy of the data available to restore data integrity to processor **110**. However, an FRC error will be triggered if the corrupted and uncorrupted data is allowed to reach FRC checker **130** before recovery unit **160** is activated. Since FRC errors are not recoverable, reset module **170** will unwind the machine state of processor **110** and reset it, if FRC checker **130** signals an FRC error before the underlying parity/ECC error is detected.

[0022] Not all FRC-errors are traceable to underlying parity/ECC or other correctible soft errors. For those that are, it is faster for error detector **140** to address the underlying soft error than for FRC-checker to address the FRC error that results when the corrupted data reaches FRC boundary **104**. As noted above, the reset process has a significantly longer latency than the recovery process, and it is to be avoided if the error can be corrected by recovery unit **150**. For this reason, FRC checker **130** is temporarily disabled if error detector **140** detects an error in either error pipeline **128**.

[0023] Data pipelines **120** operate in lock step during normal FRC mode, but data pipeline **124** and error pipeline **128** may operate relatively independently. For example, ECC hardware is relatively complex and consequently, relatively slow, especially for 2-bit errors. A flag signaling such an error may reach error detector **140** before, after, at the same time as the data with which it is associated reaches FRC checker **130**. This flexibility is generally beneficial. For example, it allows data to be used speculatively before its error status is determined. Since soft errors are relatively rare, and error pipeline **124** is generally as fast as data pipeline **128**, this flexibility is net positive. As long as the error flag arrives at error detector **140** in time to disable FRC checker **130** before it receives the corrupted data, the relatively low latency recover routine is engaged.

[0024] As noted above, races between data pipeline **124** and error pipeline **128** can reduce system availability in certain cases if not addressed. If an error flag indicating a soft error reaches detector **140** too late to disable FRC checker **130** from processing the associated data, a recoverable error becomes an FRC error, and the longer latency reset routine is engaged. The longer latency reset routine reduces the availability of system **100** for normal operation.

[0025] **FIG. 2** is a block diagram of one embodiment of an FRC-enabled processor **210** that handles race conditions effectively. Processor **210** includes first and second execution cores **220**(*a*), **220**(*b*) (generically, execution core **220**), an FRC checker **230**, an error detector **240**, a recovery unit **250**, and reset unit **260**. An FRC-boundary for processor **210** is indicated by dashed line **204**. As noted above, portions of recovery unit **250** and reset unit **260** may be implemented as firmware or software modules that are located off of the processor die.

[0026] Each execution core **220** includes a data pipeline **224** and an error pipeline **228** that feeds into FRC checker **230** and error detector **140**, respectively. Execution cores **220**(*a*), **220**(*b*) and their components operate in substantially the same manner as described above for execution cores **120**(*a*), **120**(*b*).

[0027] Error detector **240** monitors error pipelines **228**(*a*), **228**(*b*). If a signal or flag indicates an error in one of execution cores **220**, error detector **240** disables FRC checker **230** and activates recovery unit **250**. As discussed below in greater detail, FRC checker **240** provides buffering that allows error detector **230** to activate recovery unit **250**, even if it detects the error after FRC checker **230** detects a mismatch between the corresponding corrupted and uncorrupted data. Provided the error is detected within a countdown interval initiated by an FRC mismatch, the FRC mismatch is ascribed to the error, and processor **210** activates a recovery routine through recovery unit **250** rather than a slower reset routine through reset unit **260**.

[0028] Towards this end, the disclosed embodiment of FRC checker **230** includes a compare/buffer unit **234**, a queue **236** and a timer unit **238**. Compare/buffer unit **234** receives data from execution cores **220**(*a*), **220**(*b*), compares the data, and temporarily stores data from at least one execution core **220** along with a status flag to indicate if the comparison yielded a match. If the data matches, the status flag is set to indicate the match, and the data is buffered to queue **236** for continued processing by resources outside FRC boundary **204**. As discussed below, hold times for data in compare/buffer unit **234** depend on the number of entries it provides, which may depend on the countdown interval selected.

[0029] If the data does not match, the status flag is set to indicate the mismatch and timer unit **238** is triggered to begin a countdown interval. Compare/buffer unit **234** may continue to receive, compare and store data from execution cores **220**(*a*), **220**(*b*) during the countdown interval. Similarly, error detector **240** may continue to monitor error pipelines **228**(*a*), **228**(*b*). If error detector **240** receives an error flag before the timeout interval expires, it disables FRC checker **230** from receiving additional data from execution cores **220**(*a*), **220**(*b*) and triggers recovery unit **250** to implement the recovery routine for the entry tagged as a mismatch in compare/buffer unit **234**.

[0030] Operation of FRC checker **230** and execution cores **220** during the countdown interval that follows an FRC

mismatch may vary with different embodiments of the invention. For example, the stall behavior of execution cores **230** and the source of uncorrupted data may differ depending on whether results from one or both execution cores **220** are stored by compare/buffer **234**.

[**0031**] **FIGS. 3A and 3B** are block diagrams of one embodiment of a processor **310** in accordance with the present invention at two different times. Contents of data pipeline **324** and error pipeline **328** are labeled to indicate the relative times at which they are processed through execution core **320**. The labeled data blocks are not necessarily valid or fully developed until they exit pipeline **324**. For purposes of the following discussion, execution core **320**(*a*) operates as the master and execution core **320**(*b*) operates as the slave, when processor **310** is in FRC mode.

[**0032**] The disclosed embodiment of compare/buffer **334** includes a buffer, a comparator **370** and buffer entries **380(1)-380(3)** (generically, buffer entries **380**). Comparator **370** compares data from execution cores **320**(*a*) and **320**(*b*) and generates a match status signal according to the comparison. Comparator **370** also triggers a stall signal to one of execution cores **320** if the status signal indicates a mismatch. Each buffer entry **380** includes a data field **384** to store the data from master execution core **320**(*a*) and a status field **388** to store the status determined by comparator **370**.

[**0033**] For the instant reflected in **FIG. 3**A, data_0 has been accepted and forwarded to queue **338** for further processing. Here, "accepted" means that the data_0 blocks provided by master and slave execution cores **320**(*a*), **320**(*b*), respectively, matched, and no FRC error is indicated by comparator **370**. Data_1 through data_3 are accepted and currently stored in buffer entries **380(1)-380(3)**, awaiting transfer to queue **338**. Data_4 through data_8 are currently propagating through data pipelines **224**(*a*), **224**(*b*) of master and slave execution cores, **220**(*a*), **220**(*b*), respectively. An error associated with data_4 in data pipeline **324**(*a*) (indicated by dashed line) is propagating through error pipeline **328**(*a*) approximately two clock cycles behind data_4. For example, the error may represent a 2-bit soft error detected by ECC hardware. The detection hardware for 2-bit ECC errors is relatively complex, and may contribute to the delay indicated between data_4 and its error flag.

[**0034**] **FIG. 3B** shows processor **310** at a later instant in which data_3 from execution core **320**(*a*) has been forwarded to queue **336**, data_4-data_6 have been transferred to buffer **380** and their match status determined. In particular, comparator **370** has signaled a mismatch (reject) for data_4, which was corrupted by a soft error, and its uncorrupted counterpart from execution core **320**(*b*). Comparator **370** has also triggered the stall signal to slave execution core **320**(*b*) and triggered timer unit **338** to begin the countdown interval. For the disclosed embodiment, stalling one of data pipelines **324** ensures that an uncorrupted copy of the data is preserved for recovery unit **360**, in either the stalled pipeline or compare/buffer unit **334**.

[**0035**] During the countdown interval, the disclosed embodiment of FRC checker **330** continues to receive data from master execution core **320**(*a*). For the illustrated example, data_5 and data_6 have been by stored during this interval with rejected status, since corresponding elements from stalled slave execution core **320**(*b*) are unavailable for comparison.

[**0036**] During the countdown interval, error detector **340** also continues to track flags from error pipelines **328**. If the error flag associated with data_4 reaches error detector **340** before timer unit **338** signals the end of the countdown interval, error detector **340** disables FRC checker **330** and activates recovery unit **360**. If timer unit **338** detects the end of the countdown interval before error detector **340** detects the error flag, reset unit **370** is activated.

[**0037**] **FIGS. 4A and 4B** are block diagrams of another embodiment of a processor **410** in accordance with the present invention at two different times. For processor **410**, the disclosed embodiment of compare/buffer **434** includes a comparator **470** and buffer entries **480(1)-480(3)** (generically, buffer entries **480**). Comparator **470** compares data from execution cores **420**(*a*) and **420**(*b*) and generates a match status signal according to the comparison. Each buffer entry **480** includes data fields **384** and **388** to store data from execution cores **420**(*a*) and **420**(*b*), respectively, and a status field **486** to store the status determined by comparator **470**.

[**0038**] For system **400**, data blocks from both pipelines are transferred to FRC checker **430**. Consequently, no stall signal is needed to preserve uncorrupted data in one of execution cores **420** following detection of an FRC mismatch by comparator **470**. The uncorrupted data may be provided from the appropriate entry of buffer **480**.

[**0039**] Timer unit **438** initiates a countdown interval in response an FRC mismatch detected by comparator **470**. FRC checker **430** and error detector **440** continue to process data and flags, respectively, during the countdown interval. If an error reaches error detector **440** before the countdown interval expires, error detector **440** disables FRC checker **430** and activates recovery unit **460**. If the countdown interval expires first, FRC checker **430** activates reset unit **470** to reset system **400**.

[**0040**] **FIG. 5** is a flowchart representing one embodiment of a method **500** in accordance with the present invention for handling race conditions. Method **500** reflects the interactions between concurrent non-recoverable (FRC) error checking **504** and recoverable (non-FRC) error checking **508** processes.

[**0041**] Recoverable error checking process **508** monitors **580** flags/signals from an FRC-enabled processor. The monitored flags may be generated by parity checking hardware, ECC hardware or other units capable of detecting recoverable errors attributable to, e.g. soft errors within the FRC boundary of the processor. The flags may be provided to an error checker through pathways having various latencies. If an error flag is detected **590**, a signal is asserted **554** to the FRC checker and a recovery algorithm is activated **558**. The signal asserted to the FRC checker prevents it from triggering a non-recoverable error.

[**0042**] Non-recoverable error checking process **504** operates concurrently with recoverable error checking process **508**. Data from the redundant cores of an FRC-enabled processor is tracked **510** and compared **520**. If the data matches **520**, no FRC-error is indicated and process **504** continues monitoring. If a mismatch is detected **520**, a potential FRC-error is indicated.

[**0043**] To determine whether the potential FRC-error is an artifact of a race condition, a countdown interval is activated **530** and data tracking continues **540**. If a recoverable (e.g.

non-FRC) error is detected **550** during the countdown interval, process **504** relinquishes control to the recovery algorithm (**558**). If the countdown interval expires **560** before a non-FRC error is signaled, a reset algorithm is executed **570**. If the countdown interval has not yet expired **560**, process **504** continues monitoring **540** data until the countdown interval expires (**560**) or a non-FRC error is indicated **550**.

[**0044**] **FIG. 6** is a block diagram representing one embodiment of a computer system **600** in which the present invention is implemented. The disclosed embodiment of system **600** includes a processor **610**, chipset **670**, main memory **680**, non-volatile memory **690** and peripheral device(s) **694**. Chipset **670** manages communications among processor **610**, main memory **680**, non-volatile memory **690** and peripheral devices **694**.

[**0045**] Processor **610** includes first and second execution cores **620**(*a*) and **620**(*b*), respectively (generically, execution cores **620**). Each execution core includes execution resources **624** and a bus cluster **628**. Execution resources **624** may include, for example, one or more integer, floating point, load/store, and branch execution units, as well register files and cache(s) to supply them with data (e.g instructions, operands, addresses). Bus cluster **628** represents logic for managing transactions to a cache **640** that is shared by execution cores **620**(*a*) and **620**(*b*), as well as to a front side bus **660**, for those transactions that miss in shared cache **640**.

[**0046**] Error check units **630**(*a*), **630**(*b*) (generically, error check units **630**) compare results from execution cores **620** before they are transferred to shared resources like cache **640** and FSB **660**. They thus form part of the FRC boundary of processor **610**. Each error check unit **630** includes an FRC checker **230** and error detector **240** (**FIG. 2**) to provide FRC and non-FRC error checking/detection, respectively, for execution cores **620**. Error check units **630** may also include portions of recovery unit **240** and reset unit **260** (**FIG. 2**). For one embodiment of system **600**, a recovery routine **692** and a reset routine **694** may be stored in non-volatile memory **690** and images of these routines may be loaded in main memory **680** for execution. For this embodiment, recovery unit **240** and reset unit **260** may include pointers to recovery routine **692** and reset routine **694**, respectively (or their images in main memory **680**).

[**0047**] The disclosed embodiment of system **600** also includes interrupt controllers **670**(*a*) and **670**(*b*) (generically, interrupt controller(s) **670**) to process interrupts for execution cores **620**(*a*) and **620**(*b*), respectively. Each interrupt controller **670** is shown having first and second components **674** and **678**, respectively, to accommodate the different clock domains in which interrupt controller **670** may operate. For example, FSB **660** typically operates at a different frequency than processor **610**. Consequently, components of processor **610** that interact directly with FSB **660** typically operate in its clock domain, which is indicated as area **664** on processor **610**.

[**0048**] The disclosed embodiment of interrupt controller **670** also includes an FRC-boundary-like component in the form of XOR **672**. XOR **672** signals an FRC error if it detects a mismatch between outgoing signals, e.g. interrupt responses, of components **674**(*a*) and **674**(*b*) from execution cores **620**(*a*) and **620**(*b*). Errors attributable to interrupt controllers **670** may still arise, however, from soft errors in components **678**(*a*), **678**(*b*) in FSB clock domain **664**. These error may be detected by the discrepancies they introduce between the subsequent operations of execution cores **620**(*a*) and **620**(*b*).

[**0049**] For the disclosed embodiment of system **600**, a common snoop block **662** processes snoop transactions to and from execution cores **620**(*a*) and **620**(*b*). XOR **666** provides FRC-checking on snoop responses from execution cores **620**(*a*), **620**(*b*) and signals an error if a mismatch is detected.

[**0050**] There has thus been disclosed a mechanism for handling race conditions between recoverable and non-recoverable errors in an FRC-enabled processor. An FRC checker includes a buffer to temporarily store data representing results from redundant execution cores along with status bits to indicate if the results matched. An error detector monitors error hardware to determine if any of the results may have been subject to a recoverable error, such as a parity or ECC error. If the FRC checker detects a mismatch, a potential FRC error is indicated, and a timer is activated to provide the error detector with additional time to identify a recoverable error from which the FRC error originated. If a recoverable error is detected before the countdown interval expires, a recovery mechanism is triggered. If the interval expires before a recoverable error is detected, a reset mechanism is triggered. For either recovery or reset mechanisms, the FRC-enabled processor may switch temporarily into a non-FRC mode to allow one core to execute the reset/recovery code.

[**0051**] The disclosed embodiments have been provided to illustrate various features of the present invention. Persons skilled in the art of processor design, having the benefit of this disclosure, will recognize variations and modifications of the disclosed embodiments, which none the less fall within the spirit and scope of the appended claims.

We claim:

1. An apparatus comprising:

first and second execution cores to operate in an FRC mode;

an FRC check unit to compare results from the first and second execution cores and to store at least one result and a status to indicate if the results match;

an error check unit to assert a signal to the FRC checker if a recoverable error is detected in the first or second execution cores; and

a timer to trigger an FRC recovery routine if the status indicates the results do not match and the error check unit does not assert the signal within a specified interval.

2. The apparatus of claim 1, wherein the FRC checker stores a result from the master execution core and discards the result from the slave execution core.

3. The apparatus of claim 2, wherein the FRC checker stalls the slave execution core if the status indicates the results do not match and triggers a countdown to the specified interval.

4. The apparatus of claim 4, wherein the specified interval represents a time for a recoverable error to be signaled to the error detector.

5. The apparatus of claim 1, wherein the FRC check unit includes a multiple entry buffer to store results and status indicators for multiple.

6. The apparatus of claim 2, wherein a number of entries for the buffer is selected to determined by a largest number of clock cycle to propagate an error signal to the error detector.

7. The apparatus of claim 1, wherein the FRC check unit includes a buffer to store results from the first and second execution cores and their status.

8. The apparatus of claim 7, wherein the recovery routine reads an uncorrupted result from an appropriate entry of the buffer if the recoverable error is detected within the specified interval.

9. An system comprising:

first and second execution cores to operate in an FRC mode;

an FRC checker to compare results from the first and second execution cores and to trigger a countdown interval if the results do not match; and

an error detector to monitor error signals during the countdown interval and to disable the FRC checker if a recoverable error is detected before the countdown interval expires.

10. The system of claim 9, wherein the FRC checker includes a buffer to temporarily store results from at least one of the first and second execution cores.

11. The system of claim 9, wherein the FRC checker stalls one of the first and second execution cores if the results do not match.

12. The system of claim 9, further comprising a recovery unit to recover uncorrupted results from the first or second execution core, responsive to the error detector detecting a recoverable error.

13. The system of claim 12, further comprising a reset unit to reset the system, responsive to the FRC checker indicating an FRC error.

14. The system of claim 13, wherein the FRC checker indicates an FRC error if results from the first and second execution pipelines do not match and the FRC checker is not disabled before the countdown interval expires.

15. The system of claim 13, further comprising a memory device in which a recovery routine and a reset routine are stored.

16. The system of claim 15, wherein the recovery unit and the reset unit include pointers to the recovery routine and the reset routine, respectively.

17. A method comprising:

comparing results from a first and second execution core to detect an FRC error;

if the results do not match, setting a first flag and initiating a countdown interval;

monitoring an error signal for a recoverable error; and

initiating a recovery routine if the error signal is asserted before the countdown interval expires.

18. The method of claim 17, further comprising:

storing a result from at least one of the first and second execution cores; and

initiating a transaction to a shared resource if the first flag is not set.

19. The method of claim 18, further comprising initiating a reset routine if the error signal is not asserted before the countdown interval expires.

20. The method of claim 17, further comprising:

stalling one of the first and second execution cores if the first flag is set; and

continuing to monitor the error signal from the stalled execution core.

* * * * *