US005365451A

United States Patent [19]

Wang et al.

[11] Patent Number: 5,365,451

[45] Date of Patent: Nov. 15, 1994

[54] MOBILE UNIT TRACKING SYSTEM

[75] Inventors: Theresa C. Y. Wang, Scottsdale; Steven H. Moritz, Phoenix, both of Ariz.

[73] Assignee: Motorola, Inc., Schaumburg, Ill.

[21] Appl. No.: 205,753

[22] Filed: Mar. 4, 1994

Related U.S. Application Data

[63] Continuation of Ser. No. 803,835, Dec. 9, 1991, abandoned.

[51] Int. Cl.[5] H04B 1/00

[52] U.S. Cl. 364/449; 364/443; 364/466; 342/357; 342/451; 342/457; 342/385

[58] Field of Search 364/443, 450, 449, 452, 364/466, 454; 342/357, 451, 50, 356, 457, 385, 386

[56] References Cited

U.S. PATENT DOCUMENTS

4,819,174	4/1989	Furuno et al.	364/444
4,881,080	11/1989	Jablonski	342/357
4,903,212	2/1990	Yokouchi et al.	364/449
4,907,290	3/1990	Crompton	445/56
4,983,980	1/1991	Ando	342/357
5,014,206	5/1991	Scribner et al.	364/449
5,153,836	10/1992	Fraughton et al.	364/461
5,155,490	10/1992	Spradley, Jr. et al.	342/357
5,155,689	10/1992	Wortham	364/460
5,221,925	6/1993	Cross	340/988

Primary Examiner—Thomas G. Black
Assistant Examiner—Julie D. Day
Attorney, Agent, or Firm—Gregory J. Gorrie; Robert M. Handy

[57] ABSTRACT

A communication network keeps track of the locations of mobile units which utilize the network. On powering up, the mobile units determine their current locations using signals broadcast, for example, by overhead satellites. They then send data communication messages to the network describing their locations. The network saves the locations and returns data messages that describe borders which surround the mobile units' locations. The mobile units repetitively determine their current locations on a regular schedule. When their current locations are outside of their prescribed borders, they send other location data messages to the network to update the location data being maintained by the network and to receive a definition of a new border.

19 Claims, 5 Drawing Sheets

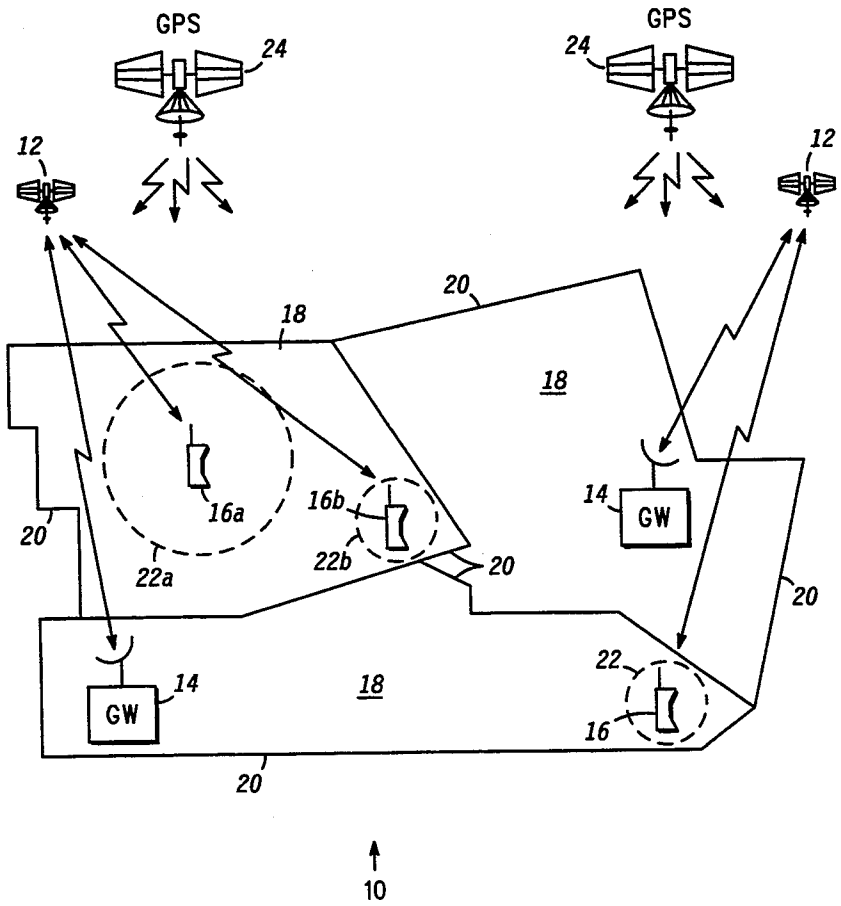

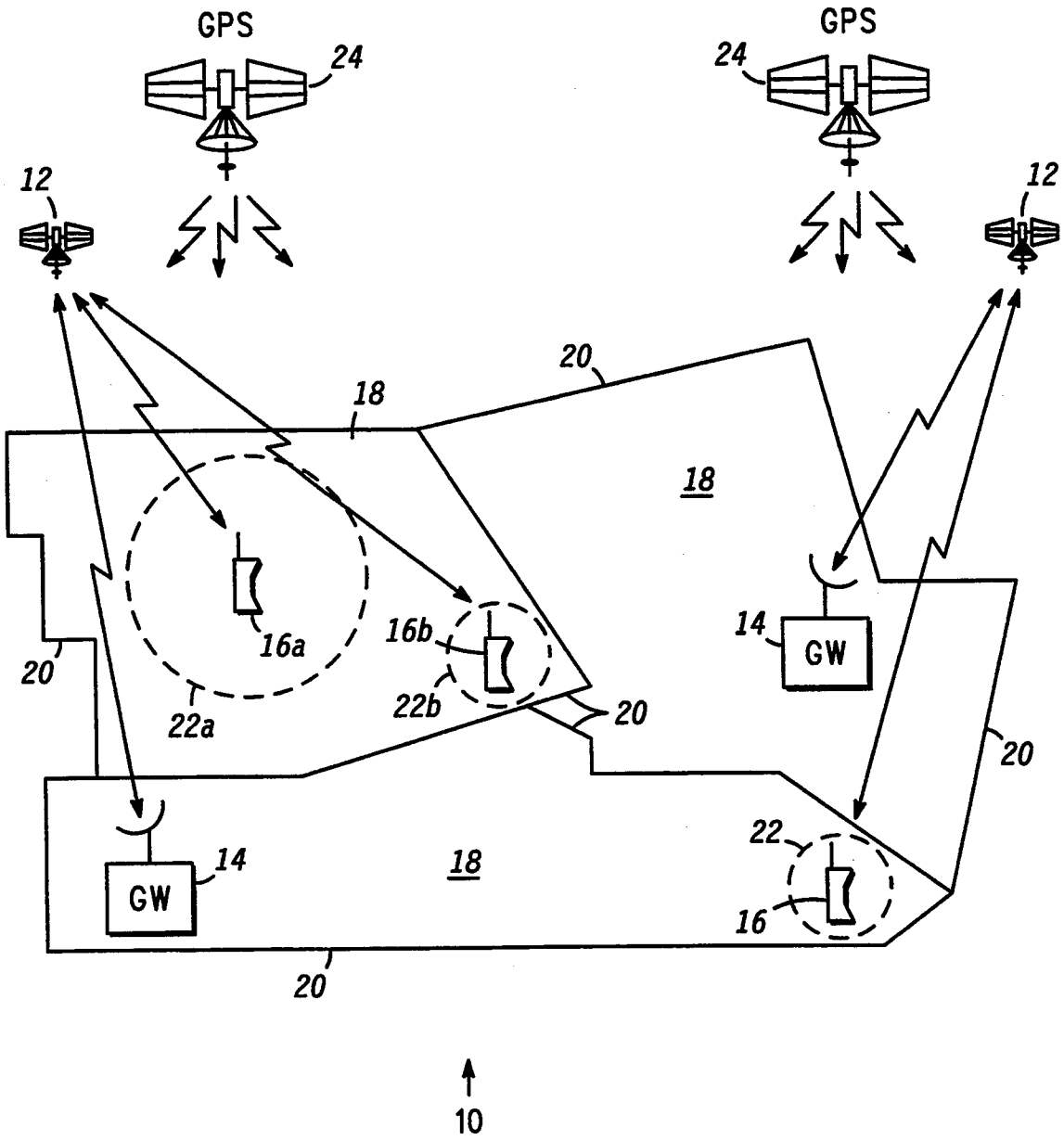
GPS
24
GPS
24
12
12
20
18
18
16a
16b
14
GW
20
22a
22b
20
20
14
GW
18
22
16
20
10

FIG. 1

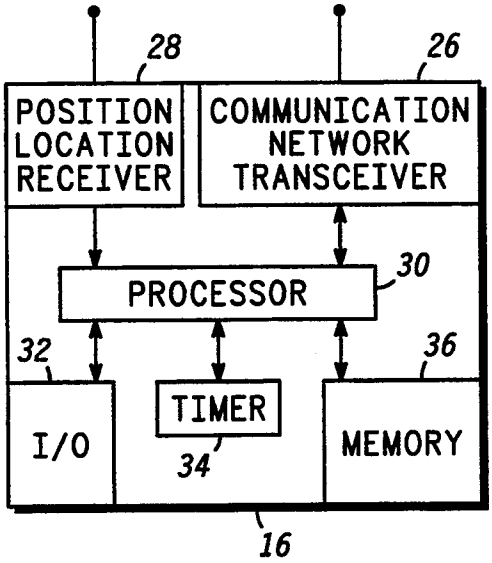

FIG. 2

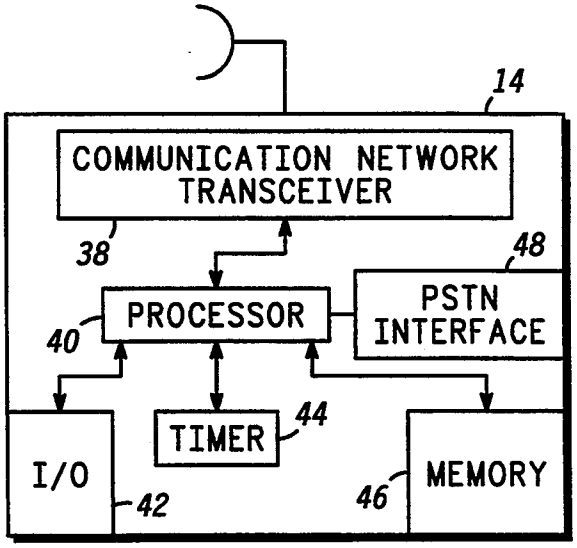

FIG. 3

FIG. 4

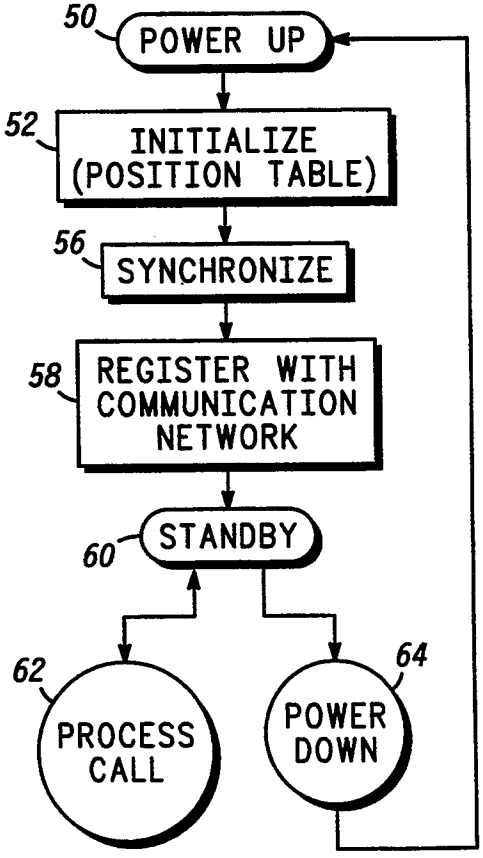

FIG. 5

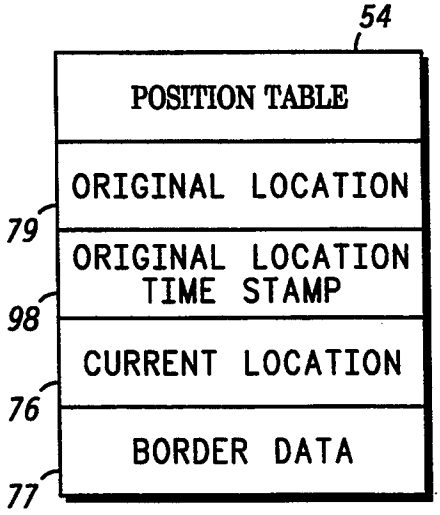

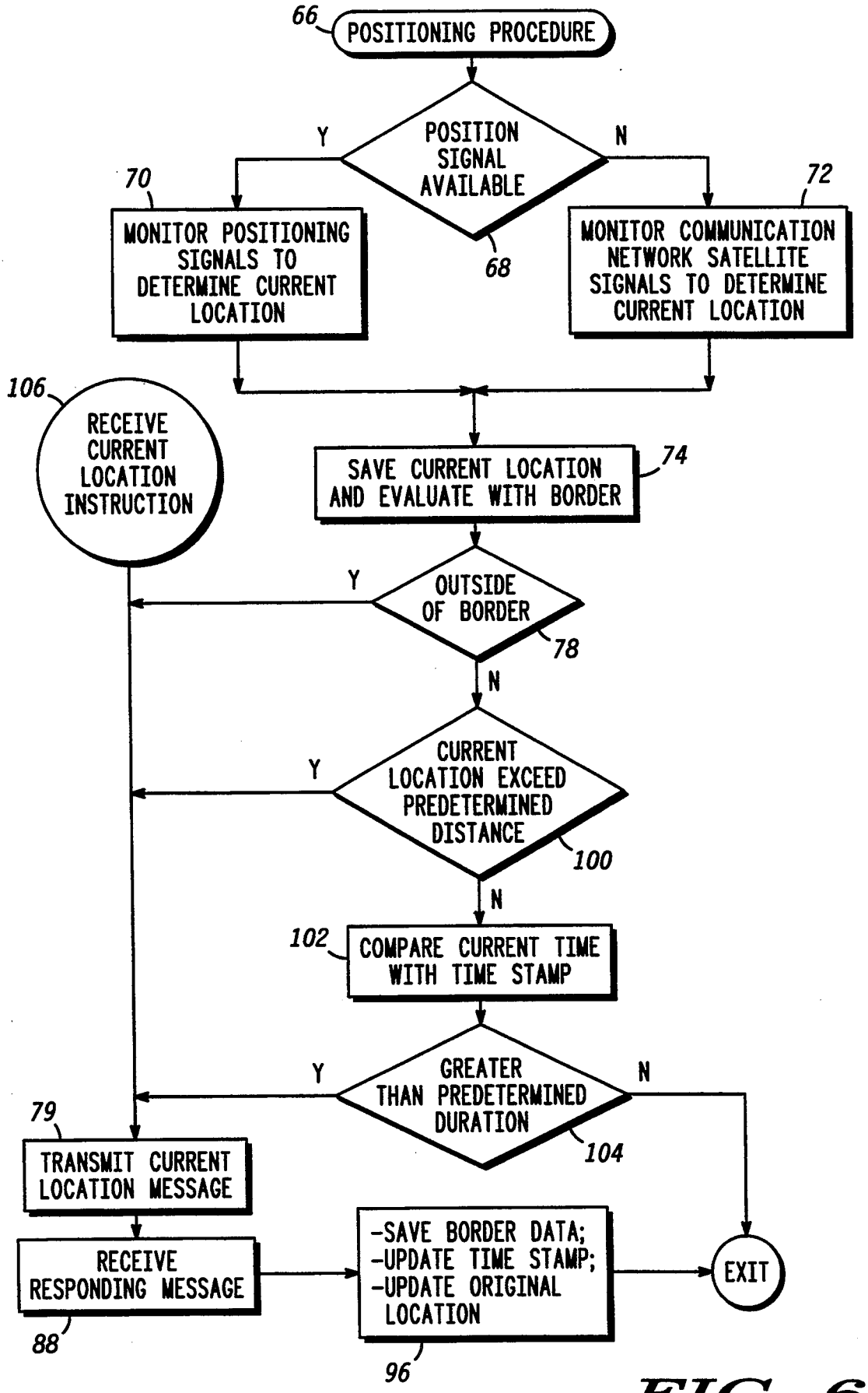
66
POSITIONING PROCEDURE
POSITION SIGNAL AVAILABLE
68
Y
N
70
MONITOR POSITIONING SIGNALS TO DETERMINE CURRENT LOCATION
72
MONITOR COMMUNICATION NETWORK SATELLITE SIGNALS TO DETERMINE CURRENT LOCATION
106
RECEIVE CURRENT LOCATION INSTRUCTION
SAVE CURRENT LOCATION AND EVALUATE WITH BORDER
74
OUTSIDE OF BORDER
78
CURRENT LOCATION EXCEED PREDETERMINED DISTANCE
100
102
COMPARE CURRENT TIME WITH TIME STAMP
GREATER THAN PREDETERMINED DURATION
104
79
TRANSMIT CURRENT LOCATION MESSAGE
RECEIVE RESPONDING MESSAGE
88
-SAVE BORDER DATA;
-UPDATE TIME STAMP;
-UPDATE ORIGINAL LOCATION
96
EXIT

FIG. 6

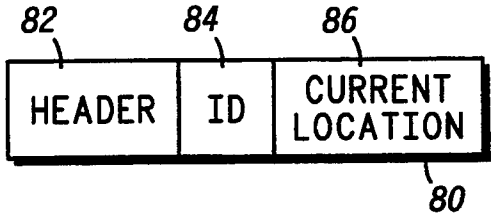

FIG. 7

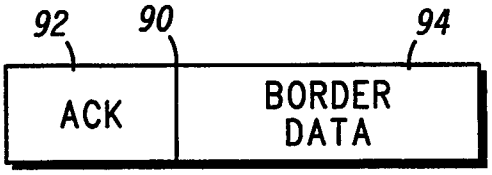

FIG. 8

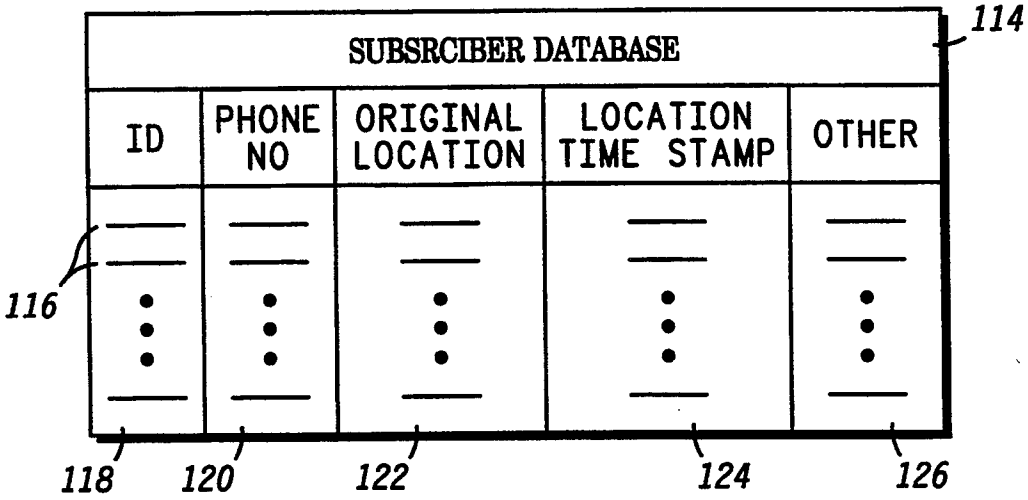

FIG. 10

FIG. 11

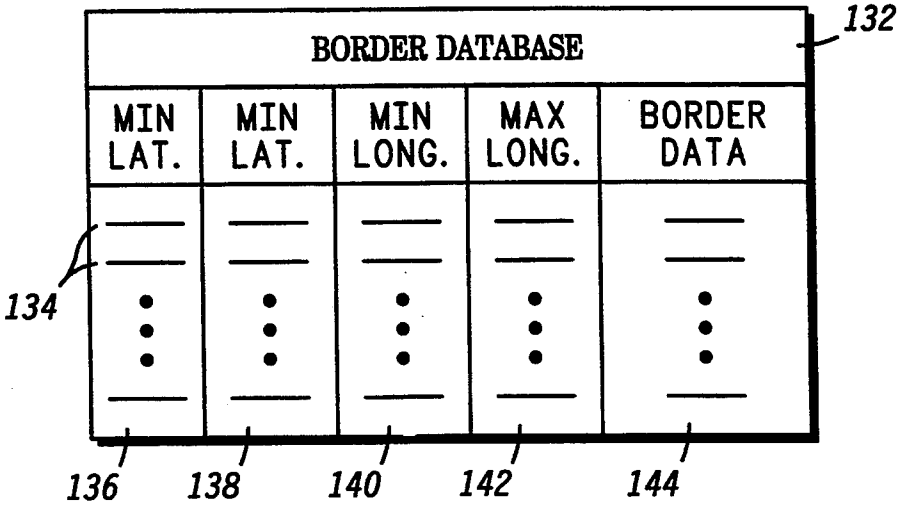

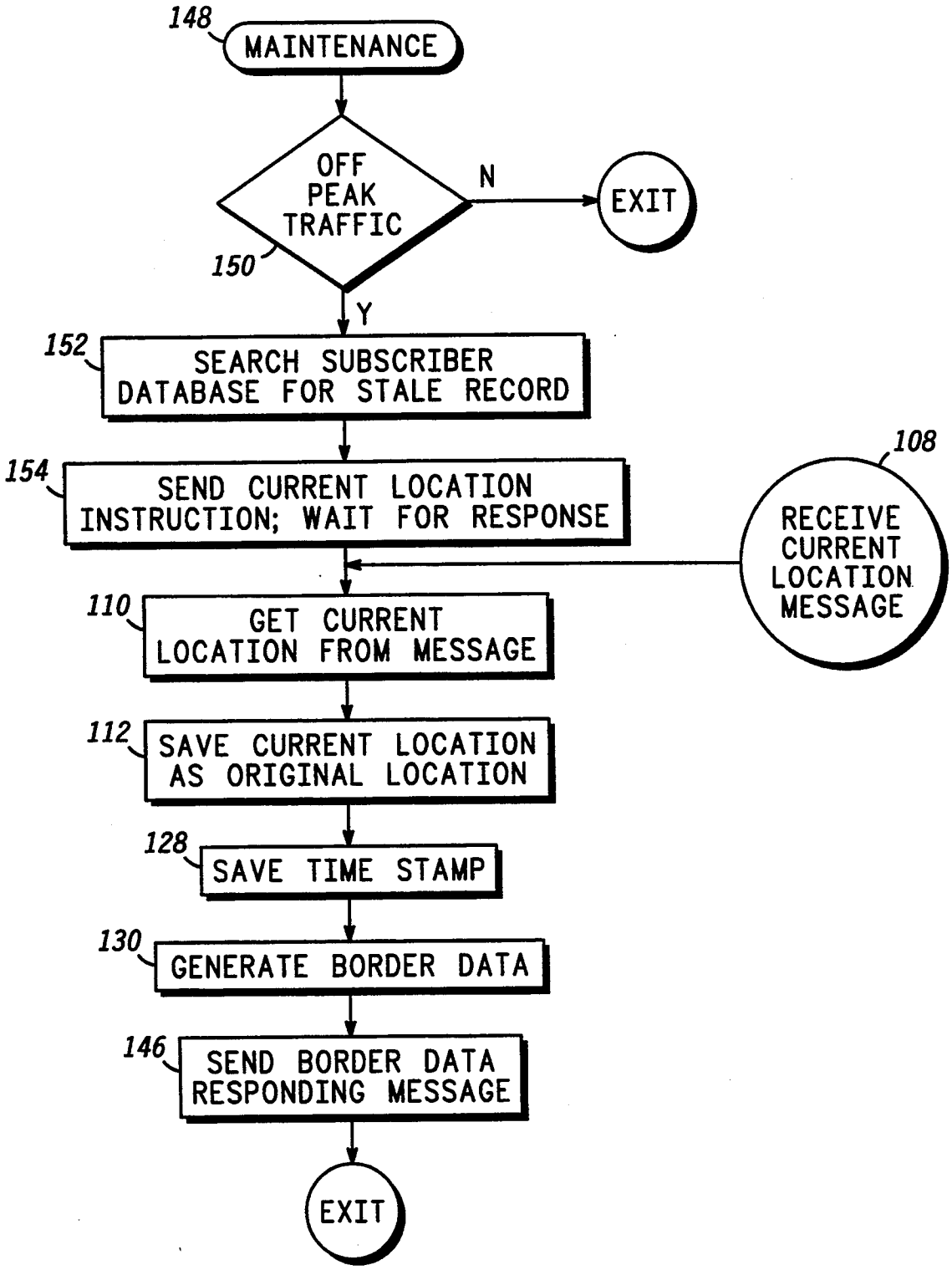
148
MAINTENANCE
OFF PEAK TRAFFIC
150
N
EXIT
Y
152
SEARCH SUBSCRIBER DATABASE FOR STALE RECORD
154
SEND CURRENT LOCATION INSTRUCTION; WAIT FOR RESPONSE
108
RECEIVE CURRENT LOCATION MESSAGE
110
GET CURRENT LOCATION FROM MESSAGE
112
SAVE CURRENT LOCATION AS ORIGINAL LOCATION
128
SAVE TIME STAMP
130
GENERATE BORDER DATA
146
SEND BORDER DATA RESPONDING MESSAGE
EXIT

FIG. 9

MOBILE UNIT TRACKING SYSTEM

This application is a continuation of prior application Ser. No. 07/803,835 filed Dec. 9, 1991, and now abandoned.

TECHNICAL FIELD OF THE INVENTION

The present invention relates generally to tracking systems. More specifically, the present invention relates to tracking systems which maintain data describing the locations of mobile units.

BACKGROUND OF THE INVENTION

Tracking systems occasionally use radio communications to discover the whereabouts of mobile units. One example of such a tracking system is used by a communication network which provides communication services through mobile radio transceivers. Radio communication messages, which are transparent to radio users, keep a central controller informed of the locations of the mobile transceivers receiving communication services through the network.

Location data are extremely valuable to a communication network. Knowledge of mobile unit location allows the network to most advantageously route communications through nodes of the network. In addition, it allows the network to conform to diverse rules and procedures which may be imposed by diverse political entities within whose jurisdictions the network may operate. For example, one jurisdiction may permit network operations only within a first set of frequencies while an adjacent jurisdiction may permit network operations only within a second set of frequencies. In addition, different tariffs or taxes may apply to communication services utilized by mobile units operating in different jurisdictions.

The more accurate the location data, the better. More accurate data allow the network to better ascertain when mobile units cross from one jurisdiction into another. However, costs generally increase in proportion to the accuracy of the location data, and an intense need to keep costs as low as possible and revenues as high as possible exists. One cost, which is of particular concern, is the amount of communication resources which are consumed in maintaining current location data. As more resources are consumed in maintaining current location data, fewer resources are available for use by communication service subscribers and for generating revenues. In addition, mobile units are often battery operated, and an excessive quantity of communications leads to an excessive use of available battery power.

SUMMARY OF THE INVENTION

Accordingly, it is an advantage of the present invention that an improved tracking system is provided.

Another advantage of the present invention is that a tracking system is provided which minimizes the quantity of communications required to maintain valid data.

Yet another advantage is that the present invention provides a tracking system which is programmable so that it can conform to diverse location-reporting needs imposed by diverse regions within which mobile units may operate.

The above and other advantages of the present invention are carried out in one form by a method of tracking a mobile unit. In a mobile unit, the method calls for receiving a data message describing a border. The mobile unit then determines when the mobile unit is outside of the border. When the mobile unit is outside the border, the mobile unit transmits a current location message describing its then-current location.

The above and other advantages of the present invention are carried out in another form by a method of tracking a mobile unit. The method calls for receiving original location data from the mobile unit. These original location data describe an original location of the mobile unit. These original location data are saved, and a data message is transmitted to the mobile unit. The data message describes a border that surrounds the original location.

BRIEF DESCRIPTION OF THE DRAWINGS

A more complete understanding of the present invention may be derived by referring to the detailed description and claims when considered in connection with the Figures, wherein like reference numbers refer to similar items throughout the Figures, and:

FIG. **1** shows a region of the earth within which a communication network operates;

FIG. **2** shows a block diagram of a mobile unit which communicates with the network;

FIG. **3** shows a block diagram of a gateway which serves as a node in the network;

FIG. **4** shows a flow chart of a power up procedure performed by the mobile unit;

FIG. **5** shows a block diagram of a position table memory structure maintained within the mobile unit;

FIG. **6** shows a flow chart of a positioning procedure performed by the mobile unit;

FIG. **7** shows a block diagram of a current location data message transmitted by the mobile unit;

FIG. **8** shows a block diagram of a border data message transmitted by the gateway;

FIG. **9** shows a flow chart of a procedure performed by the gateway;

FIG. **10** shows a block diagram of a subscriber database memory structure maintained within the gateway; and

FIG. **11** shows a block diagram of a border database memory structure maintained within the gateway.

DETAILED DESCRIPTION OF THE PREFERRED EMBODIMENT

FIG. **1** shows one of many different regions of the earth where a communication network **10** operates. In the preferred embodiment, network **10** includes artificial satellites **12** which orbit the earth. Satellites **12** may be moving with respect to the earth or stationary (i.e. geosynchronous) or may include some of each. As used herein, the words "orbit" or "orbit the earth" are intended to include all such arrangements. Communications may be routed through satellites **12** and through gateways **14**. Gateways **14** are located on the ground at fixed installations. Satellites **12** and gateways **14** serve as nodes for network **10**. Gateways **14** couple to the public switched telecommunications network (PSTN) so that communications may be routed through network **10** to or from any terminal coupled to the PSTN.

Network **10** provides communication services to any number of mobile units **16**. As the name implies, mobile units **16** are not dedicated to any particular location but may be moved from place to place. Mobile units **16** include hand-held devices which are easily portable as well as devices which are transportable with difficulty. Mobile units **16** establish a data communication link

with a nearby satellite **12**, which may then relay the data communication to a nearby gateway **14**.

Mobile units **16** operate, within any one of a number of different political jurisdictions **18**. Jurisdictions **18** are surrounded by political boundaries **20**. As a general rule, boundaries **20** possess irregular shapes. Network **10** needs to know with accuracy when mobile unit **16** crosses a boundary **20** so that frequency allocation, billing, tax, and other parameters may be set in accordance with the appropriate jurisdiction **18**. Network **10** also needs to know, albeit with less accuracy, where mobile units **16** are so that calls may be best routed through satellites **12**.

When a mobile unit **16** is centrally located within a jurisdiction **18**, as depicted at mobile unit **16***a*, it is not near a boundary **20**. Consequently, network **10** needs only relatively inaccurate data concerning the location of the mobile unit **16***a*. Mobile unit **16***a* may move a relatively large distance before it nears a boundary **20**. This large distance is indicated by the radius of a circle around mobile unit **16***a*. This circle forms a border **22***a*.

In contrast, when a mobile unit **16** is near a boundary **20**, as depicted at mobile unit **16***b*, network **10** needs relatively accurate data regarding the location of mobile unit **16***b*. Mobile unit **16***b* may enter another jurisdiction **18** by moving a relatively small distance, as indicated by the radius of border **22***b*.

As will be discussed in more detail below, mobile units **16** determine, at least in part, their own locations. In the preferred embodiment of the present invention, mobile units **16** utilize a satellite positioning system **24**, such as the Global Positioning System (GPS), in making this determination. System **24** includes a constellation of artificial satellites which orbit the earth. System **24** satellites may be the same or different than satellites **12**. In a typical embodiment, the satellites of system **24** are different than satellites **12**, but this is not essential. Mobile units **16** utilize conventional techniques to monitor and process signals transmitted by system **24** to determine their own locations. For convenience of explanation and not intended to be limiting to the present invention, the operation of system **24** is described for a GPS position locating system, but those skilled in the art will understand that other position location systems may also be used.

In general terms, the tracking system of the present invention uses mobile units **16** and gateways **14** of network **10**. Satellites **12** operate as nodes for relaying data communications between a mobile unit **16** and a gateway **14**. Each mobile unit **16** determines its own location and sends a data communication to network **10** at a nearby "local" gateway **14** to let network **10** know its location. When the gateway **14** receives the location communication, it generates data which define a border **22** and sends these border data back to the mobile unit **16**. So long as the mobile unit **16** operates within the defined border **22**, it does not need to inform network **10** of its whereabouts. However, when the mobile unit **16** goes outside the border **22**, it sends a new location communication to network **10** and receives a new border definition in response.

Thus, the tracking system of the present invention minimizes the number of communication messages which are needed for maintaining valid data. Less accurate data are maintained with few location communication messages when less accurate data may be tolerated, as indicated at mobile unit **16***a* and border **22***a*. More accurate data are maintained by more location communication messages when more accurate data are required, as indicated at mobile unit **16***b* and border **22***b* in FIG. **1**.

FIG. **2** shows a block diagram of a mobile unit **16**. Mobile unit **16** includes a transceiver **26** which transmits and receives signals in a format compatible with satellites **12** and network **10** (see FIG. **1**). These signals include data messages which allow mobile unit **16** to be in data communication with a nearby satellite **12**. Through this satellite **12** mobile unit **16** is also in data communication with any other node of network **10**, such as a nearby gateway **14** (see FIG. **1**). A position location receiver **28** of mobile unit **16**, as for example a GPS receiver, receives the signals broadcast by positioning system **24** (see FIG. **1**) and generates data describing the current location of mobile unit **16**. Transceiver **26** and receiver **28** both couple to a processor **30**. Processor **30** additionally couples to an input/output (I/O) section **32**, a timer **34**, and a memory **36**. I/O section **32** is used to collect user inputs, such as the operation of power switches, and the collection of phone numbers for placing a call. Processor **30** uses timer **34** to maintain the current date and time. Memory **36** includes data which serve as instructions to processor **30** and which, when executed by processor **30**, cause mobile unit **16** to carry out procedures which are discussed below. In addition, memory **36** includes variables, tables, and databases that are manipulated due to the operation of mobile unit **16**.

FIG. **3** shows a block diagram of a gateway **14**. Gateway **14** includes a transceiver **38** which transmits and receives signals in a format compatible with satellites **12** (see FIG. **1**). These signals include data messages which allow gateway **14** to be in data communication with a nearby satellite **12** and with any number of mobile units **16**. Transceiver **38** couples to a processor **40**. Processor **40** also couples to an I/O section **42**, a timer **44**, a memory **46**, and a PSTN interface **48**. I/O section **42** receives input from keyboards and other input devices and provides data to display terminals, printers, and other output devices. Processor **40** uses timer **44** to maintain the current date and time. Memory **46** includes semiconductor, magnetic, and other storage devices for storing data that serve as instructions to processor **40** and which, when executed by processor **40**, cause gateway **14** to carry out procedures which are discussed below. In addition, memory **46** includes variables, tables, and databases that are manipulated due to the operation of gateway **14**. Through interface **48**, gateway **14** communicates with the PSTN.

FIG. **4** shows a flow chart of a power up procedure **50** performed by mobile units **16** in accordance with the present invention. Procedure **50** is performed whenever a mobile unit **16** is energized. A task **52** performs initialization within mobile unit **16**. Those skilled in the art will appreciate that during initialization numerous memory locations may be set to predetermined values. As shown in FIG. **5**, a position table **54** is a memory structure which mobile unit **16** maintains in memory **36** (see FIG. **2**). Table **54** includes data elements that will be discussed in more detail below. Referring back to FIG. **4**, task **52** sets at least one of these data elements to a predetermined value. The predetermined value is chosen so that a positioning procedure, discussed below in connection with FIG. **6**, will decide that a location communication message needs to be sent to gateway **14** as soon as it evaluates the initialized data element. Consequently, task **52** causes mobile unit **16** to send a loca-

tion communication message to gateway **14** in response to energization of mobile unit **16**.

After task **52**, a task **56** synchronizes transceiver **26** for communication with a nearby satellite **12**. After task **56**, mobile unit **16** may engage in data communications with network **10**. In a task **58**, mobile unit **16** registers with network **10**. This registration is accomplished by sending identification data to the servicing gateway **14** and complying with any authentication procedures imposed by network **10**. The servicing gateway **14** is initially determined by the nearby satellite **12** in a process that is transparent to both the mobile unit **16** and the servicing gateway **14**. After registration, mobile unit **16** is ready to send or receive calls. When mobile unit **16** is waiting for either an incoming call or for user input instructing an outgoing call, it operates in a standby mode **60**. From standby mode **60** it may enter and return from a process call mode **62** when a call occurs. When mobile unit **16** is powered down, it enters a power down mode **64**. Mobile unit **16** exits power down mode **64** to repeat power up procedure **50** when it is energized.

FIG. **6** shows a flow chart of a positioning procedure **66**. A mobile unit **16** repetitively performs procedure **66** on a regular schedule while it operates in either standby mode **60** or process call mode **62** (see FIG. **4**). In the preferred embodiment, this regular schedule may vary from once every few seconds to once every several minutes or hours.

During procedure **66**, mobile unit **16** performs a query task **68** to determine whether a signal from positioning system **24** (see FIG. **1**) is available for use in determining its location. In the normal course of operation, system **24** is available and the preferred technique for determining location. Thus, when system **24** is available, mobile unit **16** performs a task **70** utilizing position location receiver **28** (see FIG. **2**) to receive signals from system **24**. Task **70** processes the signals in a conventional manner to obtain a set of parameters which describe the current location.

On the other hand, to prevent network **10** from being entirely dependent upon system **24**, the present invention includes a back-up technique for determining current location. Thus, when system **24** is not available, a task **72** is performed to determine current location from signals broadcast by satellites **12** of network **10**. In the preferred embodiments, satellites **12** travel in their orbits with respect to the earth at around 25,000 km/hr. Accordingly, these satellite signals experience a significant amount of Doppler shift, and this Doppler shift changes as the satellite moves overhead. In addition, satellites **12** broadcast cell location data. Consequently, task **72** monitors range and range rate data to obtain a Doppler signature which, when combined with the cell location data, corresponds to the location of mobile unit **16**. The back-up technique contemplated in task **72** may be slower and less accurate than the location determination technique of task **70**. Nevertheless, such backup location data is preferred over no location data.

After the current location of mobile unit **16** has been determined in either of tasks **70** or **72**, a task **74** saves the current location data and evaluates the current location with respect to the current border **22***a*–**22***b* (see FIG. **1**) established for that mobile unit **16**. With reference back to FIG. **5**, position table **54** includes data elements **76** and **77** which are used for storing current location data and border data, respectively.

When task **70** is used for determining current location, the current location data preferably describe a latitude and a longitude. As used herein, the words "latitude" and "longitude" are intended to include any other reference or measurement technique capable of identifying position. In one embodiment of the present invention, the border data describe minimum and maximum latitudes and longitudes. Thus, border **22** conveniently has a square or rectangular shape. Task **74** compares the current location against border **22** to determine whether the current location is outside border **22**.

In another embodiment of the present invention, the border data describe a distance which is interpreted as a radius. A data element **79** of position table **54** (see FIG. **5**) describes a latitude and longitude of an original location. Task **74** compares the current location to see if mobile unit **16** is a greater distance from the original location than indicated by this radius. In this embodiment, border **22** forms a circle, as shown in FIG. **1**, having a center at the original location and a radius defined by the border data. Task **74** again determines whether mobile unit **16** is outside border **22**. Those skilled in the art will appreciate that border data is not limited to describing a square, rectangle, or circle but may describe any shape including the shape of a political jurisdiction **18**.

After task **74**, a query task **78** routes program control to a task **79** if the current location of mobile unit **16** is outside of border **22**. Task **79** transmits a current location data message **80** to network **10**. FIG. **7** shows a block diagram of a preferred format for message **80**. In particular, message **80** includes a header **82** for informing network **10** that it is a current location message, an ID **84** for informing network **10** about which mobile unit **16** is sending the message, and current location data **86** which describe the current location of the mobile unit **16** in either latitude/longitude or other parameter form.

With reference back to FIG. **6**, procedure **66** waits after task **79** until a task **88** receives a responding message **90** from network **10**. FIG. **8** shows a block diagram of a preferred format for message **90**. In particular, message **90** includes an acknowledgement block **92** which informs mobile unit **16** that network **10** received the previous current location message **80** (see FIG. **7**). In addition, message **90** includes border data **94** which describe border **22** (see FIG. **1**). Border data **94** should be configured so that the resulting border **22** surrounds the current location specified by current location data **86** of message **80** (see FIG. **7**).

After message **90** has been received, a task **96** (see FIG. **6**) saves border data **94** (see FIG. **8**) in position table **54** at data element **77** (see FIG. **5**). In addition, task **96** updates a time stamp data element **98** of position table **54** to indicate the current date and time and updates original location data element **79** of position table **54** (see FIG. **5**) to indicate the current location. After task **96**, program control exits procedure **66**. Procedure **66** is thereafter repeated in accordance with its schedule.

With reference back to task **78**, a different process results when the current location of mobile unit **16** is not outside of border **22**. In particular, procedure **66** tests for other conditions which can trigger the sending of a current location message to network **10**. Generally speaking, these other conditions are backup conditions which occur only rarely in normal operation. Thus, a very small amount of communication resources is consumed in dealing with location reports generated as a result of these conditions.

Specifically, in a preferred implementation a query task **100** determines whether the current location of mobile unit **16** exceeds a predetermined distance from the original location, as indicated by data element **79** (see FIG. **5**). Preferably, this predetermined distance is set to such a large value that mobile unit **16** is unlikely to exceed it unless some problem has been encountered in defining border **22**. If this predetermined distance has been exceeded, then tasks **79**, **88**, and **96** are performed to update network **10** and to receive a new definition for border **22**.

If this predetermined distance has not been exceeded, then a task **102** compares the time stamp recorded at data element **98** (see FIG. **5**) with the current date and time to determine if a predetermined duration has expired. Preferably, this duration is set to a very large value, such as once a month, so that relatively stationary mobile units **16** do not consume a significant amount of communication resources in reporting their locations to network **10**. If this predetermined duration has not been exceeded, a task **104** causes program control to exit procedure **66**. On the other hand, if this predetermined duration has been exceeded, task **104** routes program control to tasks **79**, **88**, and **96** to update network **10**.

With reference back to task **52** (see FIG. **4**), the initialization of position table **54** (see FIG. **5**) may set time stamp data element **98** to a predetermined value which indicates a date far in the past. Thus, the first time procedure **66** is performed after energization, task **104** will detect a large duration, a current location message will be sent to network **10**, the original location and time stamp will be updated, and new border data will be received from network **10**.

While procedure **66** is preferably repeated on a regular schedule, a mobile unit **16** may receive a current location instruction message from network **10** at any time, as indicated at node **106**. The current location instruction message instructs mobile unit **16** to respond by sending data describing its location. When this instruction is received, tasks **79**, **88**, and **96** are performed whether or not procedure **66** is active. As discussed above, in tasks **79**, **88**, and **96** mobile unit **16** sends the current location message and expects border data in response.

Gateways **14** desirably perform the tracking function for network **10**, but the tracking function may be performed elsewhere in network **10**. Each gateway **14** performs this function for those mobile units **16** which are registered there. In the preferred embodiment, each mobile unit **16** has a home gateway **14**, but may be roaming within the area served by any other gateway **14**. Serving and home gateways **14** may communicate with one another through network **10** or the PSTN as needed to share information about subscriber mobile units **16**. FIG. **9** shows a flow chart of a procedure performed by serving gateways **14** in maintaining location data for their registered mobile units **16**. From the perspective of a gateway **14**, a current location message **80** (see FIG. **7**) may be received from any registered mobile unit **16** at any time, as indicated at node **108**. When message **80** is received, a task **110** gets current location data **86** (see FIG. **7**) from message **80**.

A task **112** saves current location data **86** in a subscriber database **114** memory structure maintained within memory **46** (see FIG. **3**). FIG. **10** shows a block diagram of database **114**. Database **114** includes a record **116** for each registered mobile unit **16**. Each record **116** includes a data field **118** for the mobile unit's ID, a data field **120** for the mobile unit's phone number, a data field **122** for the mobile unit's original location, a data field **124** for a time stamp associated with the original location, and other data elements **126**. Other data elements **126** describe related home or serving gateways, billing instructions, service level identifiers, and any other data needed for operation of network **10**.

With reference to FIGS. **9–10**, original location data field **122** describes the last known location of the associated mobile unit **16**. It is in data field **122** that the current location data **86** are stored. In other words, the current location is now used as the original location. A task **128** saves the current date and time in time stamp data field **124**.

Next, a task **130** uses the current/original location just received from a mobile unit **16** to generate border data. In the preferred embodiment, task **130** uses a border database **132** to generate the border data. FIG. **11** shows a block diagram of a border database **132** memory structure maintained within memory **46** (see FIG. **3**). Border database **132** includes records **134** which describe sections of the region served by the gateway **14**. Each section is characterized by a minimum latitude **136**, a maximum latitude **138**, a minimum longitude **140**, and a maximum longitude **142**. Database **132** includes as many records **134** as are needed to describe the region served by the gateway **14**. This region may, but need not, conform to one or more jurisdictions **18** (see FIG. **1**). Each record **134** includes border data **144**. Border data **144** describe the border **22** (see FIG. **1**) to be associated with any mobile unit **16** located within the section defined by associated latitudes and longitudes **136–142**. As discussed above, border data **144** may describe a distance which serve as a radius. Alternatively, border data **144** may describe latitudes and longitudes. If fact, latitudes and longitudes **136–142** may serve as border data **144**.

With reference to FIGS. **9** and **11**, task **130** performs a table look-up operation to find the record **134** in database **132** that is indicated by the location data just received from a mobile unit **16**. In the preferred embodiment, task **130** simply reads appropriate border data from data element **144** of database **132**. This border data are configured to define a border **22** which surrounds the location indicated by the location data. If the location data, for example, is in the form of Doppler parameters and satellite parameters, task **130** translates such parameters into latitude and longitude data before performing the table look-up on database **132**.

After task **130** has obtained border data, a task **146** sends border data responding message **90** (see FIG. **8**) back to the mobile unit **16**. After task **146**, gateway **14** and network **10** have finished processing the current location message received at node **108**.

Gateway **14** may additionally perform a maintenance procedure **148** to insure that its original locations are as current as possible. As indicated at task **150**, procedure **148** is preferably performed only at off-peak traffic times. In other words, if communication traffic on network **10** through the gateway **14** is nearing its peak capacity, then procedure **148** is deferred until later. That way, communication which results from performing procedure **148** does not usurp communication resources which subscribers may need.

At a task **152**, time stamps **124** of records **116** in subscriber database **114** (see FIG. **10**) are searched for currently registered subscribers having stale original

location data. Task **152** may search for any record **116** for which the time stamp **124** thereof indicates at least a predetermined age with respect to the current time. When a stale record is located, a task **154** sends a current location instruction to the indicated mobile unit **16** and waits for a response from the mobile unit **16**. When the response is received, tasks **110**, **112**, **128**, **130**, and **146** are performed as discussed above to update original location and time stamp data elements **122** and **124** and to return new border data to the mobile unit **16**. After performing task **146**, maintenance procedure **148** may be repeated with respect to another stale subscriber record **116**.

In summary, the present invention provides a tracking system which minimizes the quantity of communications required to maintain valid location data. Mobile units are dynamically programmed with border data, and the border data are individually adapted to the locations of the mobile units. Thus, the present invention can adapt to diverse location-reporting needs imposed by diverse regions within which the mobile units may operate.

The present invention has been described above with reference to a preferred embodiment. However, those skilled in the art will recognize that changes and modifications may be made in this preferred embodiment without departing from the scope of the present invention. For example, while the preferred embodiment has been described in terms of using a GPS satellite based positioning system for providing location signals to mobile units **16**, other positioning systems or methods can also be employed. As used herein, the works "position location" are intended to include such other position location means and methods as will occur to those of skill in the art, whether satellite based or terrestrially based. LORAN is one example of a terrestrially based positioning location system already available in many parts of the world. Other position location means and methods are also known. Accordingly, these and other changes and modifications which are obvious to those skilled in the art are intended to be included within the scope of the present invention.

What is claimed is:

1. A method of tracking a mobile unit, said method comprising the steps of:

establishing a communication link with a node of a satellite communication system comprised of a plurality of nodes having movement relative to said mobile unit;

generating at said mobile unit, original location data, said original location data describing an original location of said mobile unit;

sending said original location data from said mobile unit to said one node;

first determining by said communication system, a geo-political jurisdiction in which said mobile unit resides based on said original location;

second determining by said communication system, parameters for said communication link based on restrictions imposed by said geo-political jurisdiction, said parameters including frequency allocation, billing rates and taxes;

calculating by said communication system, a radius determined in part by said mobile unit's proximity to a border of said geo-political jurisdiction in which said mobile unit resides based on said original location of said mobile unit;

receiving at said mobile unit, a data message describing said radius;

defining by said mobile unit, an area around said original location of said mobile unit using said radius;

third determining, by said mobile unit, when said mobile unit is outside of said area by comparing said original location to a current location of said mobile unit; and

transmitting to said satellite communication system, from said mobile unit when said mobile unit is outside of said area, a current location data message describing said current location of said mobile unit.

2. A method as claimed in claim **1** wherein:

said method additionally comprises after said generating step the step of saving in said mobile unit, data describing said original location;

said data message describing said radius includes a value which describes a distance;

said defining step comprises the step of defining a circular area using said radius and said original location; and

said third determining step determines that said current location is outside of said circular area when said current location is greater than said distance away from said original location.

3. A method as claimed in claim **1** wherein said sending step comprises the step of sending said original location data describing a latitude and a longitude of said original location, and said first determining step comprises the steps of looking up in a look up table, said geo-political jurisdiction in which said mobile unit resides based on said latitude and longitude.

4. A method as claimed in claim **1** additionally comprising the steps of:

fourth determining, at said mobile unit, when said mobile unit has moved to a new location which is at least a predetermined distance away from said original location; and

transmitting, from said mobile unit, a second data message describing said new location.

5. A method as claimed in claim **1** additionally comprising the steps of:

saving a time stamp describing the approximate time when said mobile unit was at said original location;

determining, at said mobile unit, when a predetermined duration has transpired since the time described by said time stamp; and

transmitting, from said mobile unit upon the expiration of said predetermined duration, a third data message describing said current location.

6. A method as claimed in claim **1** wherein said generating, sending, first determining, second determining, calculating and receiving steps are performed in response to energizing said mobile unit.

7. A method as claimed in claim **1** additionally comprising the step of repeating said first determining, said calculating, said receiving, said defining and said third determining steps after said transmitting step; and the step of

reevaluating by said communication system, said parameters of said communication link when said said current location resides within a different geo-political jurisdiction.

8. A method as claimed in claim **1** wherein said determining step comprises the steps of:

monitoring radio-frequency signals to obtain a set of parameters which are descriptive of said current location;

evaluating said set of parameters to detect a predetermined relationship with respect to said area; and

repeating said monitoring and evaluating steps until said predetermined relationship is detected in said evaluating step.

9. A method as claimed in claim **8** wherein said monitoring step comprises the step of receiving artificial satellite positioning system signals.

10. A method of managing communications between a mobile unit that operates within various geo-political jurisdictions and nodes of a satellite communication network, said method allowing for parameters of a communication link to conform with diverse rules and procedures imposed by said various geo-political jurisdictions, said method comprising the steps of:

generating, at said mobile unit, original location data by using an artificial satellite positioning system, said original location data describing an original location of said mobile unit;

sending, from said mobile unit to a satellite, a data message describing said original location, said satellite being a node of said communication network; and

communicating by said mobile unit with said communication network over said communication link, said parameters for said communication link based on restrictions imposed by a geo-political jurisdiction in which said mobile unit resides, said parameters including frequency allocation, billing rates and taxes.

11. A method as claimed in claim **10** wherein said generating, and sending steps are performed in response to energizing said mobile unit,

said method further comprises the steps of:

receiving, at said mobile unit, a data message describing a distance defining an area around said original location, said distance determined in part by said mobile unit's proximity to a border of said geo-political jurisdiction in which said mobile unit resides; and

sending from said mobile unit to said communication network, new location data when said mobile unit is outside said area.

12. A mobile unit for use in a communication system which manages data describing a location for said mobile unit, said mobile unit comprising:

a location generator for generating original location data describing an original location of said mobile unit when said mobile unit initiates a communication service;

a memory for storing said original location data;

a transceiver for sending said original location data to said communication system; and

a processor coupled to said location generator, said memory, and said transceiver, said processor being configured to obtain said original location data from said location generator,

cause said memory to save said original location data, cause said transceiver to transmit said original location data to said communication system and to obtain border data received at said transceiver from said communication system, said border data determined by said communication system and including a distance to a boundary of a geo-political jurisdiction in which said mobile unit resides;

said processor causing said location generator to generate current location data and determine when a current location of said mobile unit is outside of a circular area determined by said distance and said original location;

said processor causing said transceiver to transmit a current location data message which includes said current location to said communication system when said current location is outside said area, said communication system determining parameters for said communication service including frequency allocation, billing rate and tax.

13. A mobile unit as claimed in claim **12** further comprising a control unit linked to said mobile unit and wherein said processor is further configured to automatically cause said transceiver to transmit current location data to said control unit when said current location is outside of said area, said current location data describing said current location.

14. A mobile unit as claimed in claim **12** further comprising a control unit linked to said mobile unit and wherein said processor is further configured to determine when a current location of said mobile unit is at least a predetermined distance away from an original location described by said original location data and to transmit current location data to said control unit when said current location is at least said predetermined distance away, said current location data describing said current location.

15. A mobile unit as claimed in claim **12** wherein said processor is further configured to obtain said original location data from said location generator, cause said memory to save said original location data, and cause said transceiver to transmit said original location data in response to said mobile unit being energized.

16. A method as claimed in claim **1** wherein said generating step comprises the step of generating said original location data by monitoring a Doppler signature of at least one satellite of said plurality of orbiting satellites.

17. A method as claimed in claim **1** wherein said generating step comprises the step of generating said original location data by receiving artificial satellite positioning system signals from a Global Positioning System (GPS).

18. A mobile unit as claimed in claim **12** wherein said processor is further configured to establish a communication link with a satellite of said communication system, said satellite being part of a plurality of orbiting satellites having movement relative to said mobile unit and part of said satellite positioning system.

19. A mobile unit as claimed in claim **18** wherein said artificial satellite positioning signals comprise a Doppler signature of said satellite.

* * * * *