US007877707B2

(12) **United States Patent**
Westerman et al.

(10) **Patent No.: US 7,877,707 B2**
(45) **Date of Patent: Jan. 25, 2011**

(54) **DETECTING AND INTERPRETING REAL-WORLD AND SECURITY GESTURES ON TOUCH AND HOVER SENSITIVE DEVICES**

(75) Inventors: **Wayne Carl Westerman**, San Francisco, CA (US); **Myra Mary Haggerty**, San Mateo, CA (US)

(73) Assignee: **Apple Inc.**, Cupertino, CA (US)

(*) Notice: Subject to any disclaimer, the term of this patent is extended or adjusted under 35 U.S.C. 154(b) by 799 days.

(21) Appl. No.: **11/818,500**

(22) Filed: **Jun. 13, 2007**

(65) **Prior Publication Data**

US 2008/0168403 A1 Jul. 10, 2008

Related U.S. Application Data

(60) Provisional application No. 60/879,191, filed on Jan. 6, 2007.

(51) **Int. Cl.**
G06F 13/00 (2006.01)
G06F 15/00 (2006.01)

(52) **U.S. Cl.** **715/863**; 715/864

(58) **Field of Classification Search** 715/762–765, 715/863–865, 847, 752, 771, 778, 857; 345/173, 345/177

See application file for complete search history.

(56) **References Cited**

U.S. PATENT DOCUMENTS

5,471,578	A	11/1995	Moran et al.
5,483,261	A	1/1996	Yasutake
5,488,204	A	1/1996	Mead et al.
5,539,427	A	7/1996	Bricklin et al.
5,543,591	A	8/1996	Gillespie et al.
5,590,219	A	12/1996	Gourdol
5,612,719	A	3/1997	Beernink et al.
5,825,352	A	10/1998	Bisset et al.
5,835,079	A	11/1998	Shieh
5,880,411	A	3/1999	Gillespie et al.
6,188,391	B1	2/2001	Seely et al.
6,252,598	B1	6/2001	Segen
6,310,610	B1	10/2001	Beaton et al.

(Continued)

FOREIGN PATENT DOCUMENTS

EP 0 622 722 A2 11/1994

(Continued)

OTHER PUBLICATIONS

Anonymous, (Sep. 1, 1993), "Method for Access Control via Gestural Verification," *IBM Technical Disclosure Bulletin* 36(9B):487-488.

(Continued)

Primary Examiner—Cao "Kevin" Nguyen
(74) *Attorney, Agent, or Firm*—Morrison & Foerster LLP

(57) **ABSTRACT**

"Real-world" gestures such as hand or finger movements/orientations that are generally recognized to mean certain things (e.g., an "OK" hand signal generally indicates an affirmative response) can be interpreted by a touch or hover sensitive device to more efficiently and accurately effect intended operations. These gestures can include, but are not limited to, "OK gestures," "grasp everything gestures," "stamp of approval gestures," "circle select gestures," "X to delete gestures," "knock to inquire gestures," "hitchhiker directional gestures," and "shape gestures." In addition, gestures can be used to provide identification and allow or deny access to applications, files, and the like.

12 Claims, 44 Drawing Sheets

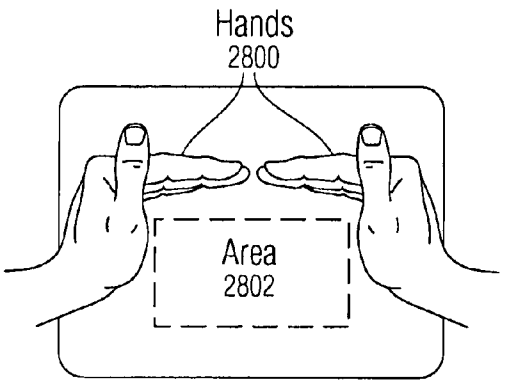

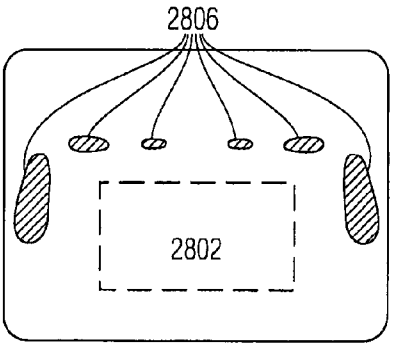

U.S. PATENT DOCUMENTS

6,323,846	B1	11/2001	Westerman et al.	
6,690,387	B2	2/2004	Zimmerman et al.	
7,015,894	B2	3/2006	Morohoshi	
7,084,856	B2	8/2006	Huppi	
7,170,496	B2	1/2007	Middleton	
7,184,064	B2	2/2007	Zimmerman et al.	
7,312,785	B2	12/2007	Tsuk et al.	
7,345,671	B2	3/2008	Robbin et al.	
7,663,607	B2	2/2010	Hotelling et al.	
2005/0003851	A1	1/2005	Chrysochoos et al.	
2005/0052427	A1	3/2005	Wu et al.	
2005/0063564	A1	3/2005	Yamamoto et al.	
2005/0114788	A1*	5/2005	Fabritius	715/767
2005/0162402	A1	7/2005	Watanachote	
2005/0162407	A1	7/2005	Sakurai et al.	
2006/0026521	A1	2/2006	Hotelling et al.	
2006/0026535	A1	2/2006	Hotelling et al.	
2006/0097991	A1*	5/2006	Hotelling et al.	345/173
2006/0161871	A1	7/2006	Hotelling et al.	
2006/0197753	A1	9/2006	Hotelling	
2006/0238522	A1	10/2006	Westerman et al.	
2007/0046643	A1	3/2007	Hillis et al.	
2010/0031203	A1	2/2010	Morris et al.	
2010/0083111	A1	4/2010	de los Reyes	

FOREIGN PATENT DOCUMENTS

EP	0 622 722	A3	11/1994
EP	0 622 722	B1	11/1994
EP	0 626 636	A2	11/1994
EP	0 626 636	A3	11/1994
EP	0 626 636	B1	11/1994
EP	0 667 567	A2	8/1995
EP	0 667 567	A3	8/1995
EP	0 667 567	B1	8/1995
EP	0 689 124	A2	12/1995
EP	0 689 124	B1	12/1995
EP	1 517 228	A2	3/2005
EP	1 517 228	A3	3/2005
JP	2000-163031	A	6/2000
JP	2002-342033	A	11/2002
WO	WO-92/08183	A1	5/1992
WO	WO-98/19292	A1	5/1998
WO	WO-2008/085788	A2	7/2008

OTHER PUBLICATIONS

International Search Report mailed Jan. 15, 2009, for PCT Application No. PCT/US2007/089171, filed Dec. 28, 2007, 11 pages.

Paradiso, J.A. (Jul. 2003). "Tracking Contact and Free Gesture Across Large Interactive Surfaces," *Communications of the ACM*, 46(7):62-68.

Varenhorst, C. et al. (Jul. 27, 2004). "Passdoodles: A Lightweight Authentication Method," located at <http://people.csail.mit.edu/emax/papers/varenhorst.pdf>, last visited Sep. 10, 2008.

Wu, M. et al. (Nov. 2, 2003). "Multi-Finger and Whole Hand Gestural Interaction Techniques for Multi-User Tabletop Displays," *Proceedings of the 16th Annual ACM Symposium on User Interface Software and Technology*, Vancouver, Canada, Nov. 2—5, 2003, 5(2):193-202.

Rekimoto, Jun; SmartSkin: An Infrastructure for Freehand Manipulation on Interactive Surfaces, Sony Computer Science Laboratories, Inc.; CHI 2002, Apr. 20-25, 2002, Minneapolis, Minnesota, Copyright 2001; ACM 1-58113-453-Mar. 2, 2004.

Minsky, Margaret R.; Manipulating Simulated Objects with Real-world Gestures Using a Force and Position Sensitive Screen; Computer Graphics, vol. 18, No. 3, Jul. 1984; Copyright 1984 ACM 0-89791-138-5/84/007/0195.

Lee, S.K. et al. (Apr. 1985). "A Multi-Touch Three Dimensional Touch-Sensitive Tablet," *Proceedings of CHI: ACM Conference on Human Factors in Computing Systems*, pp. 21-25.

Rubine, D.H. (Dec. 1991). "The Automatic Recognition of Gestures," CMU-CS-91-202, Submitted in Partial Fulfillment of the Requirements of the Degree of Doctor of Philosophy in Computer Science at Carnegie Mellon University, 285 pages.

Rubine, D.H. (May 1992). "Combining Gestures and Direct Manipulation," CHI '92, pp. 659-660.

Westerman, W. (Spring 1999). "Hand Tracking, Finger Identification, and Chordic Manipulation on a Multi-Touch Surface," A Dissertation Submitted to the Faculty of the University of Delaware in Partial Fulfillment of the Requirements for the Degree of Doctor of Philosophy in Electrical Engineering, 364 pages.

* cited by examiner

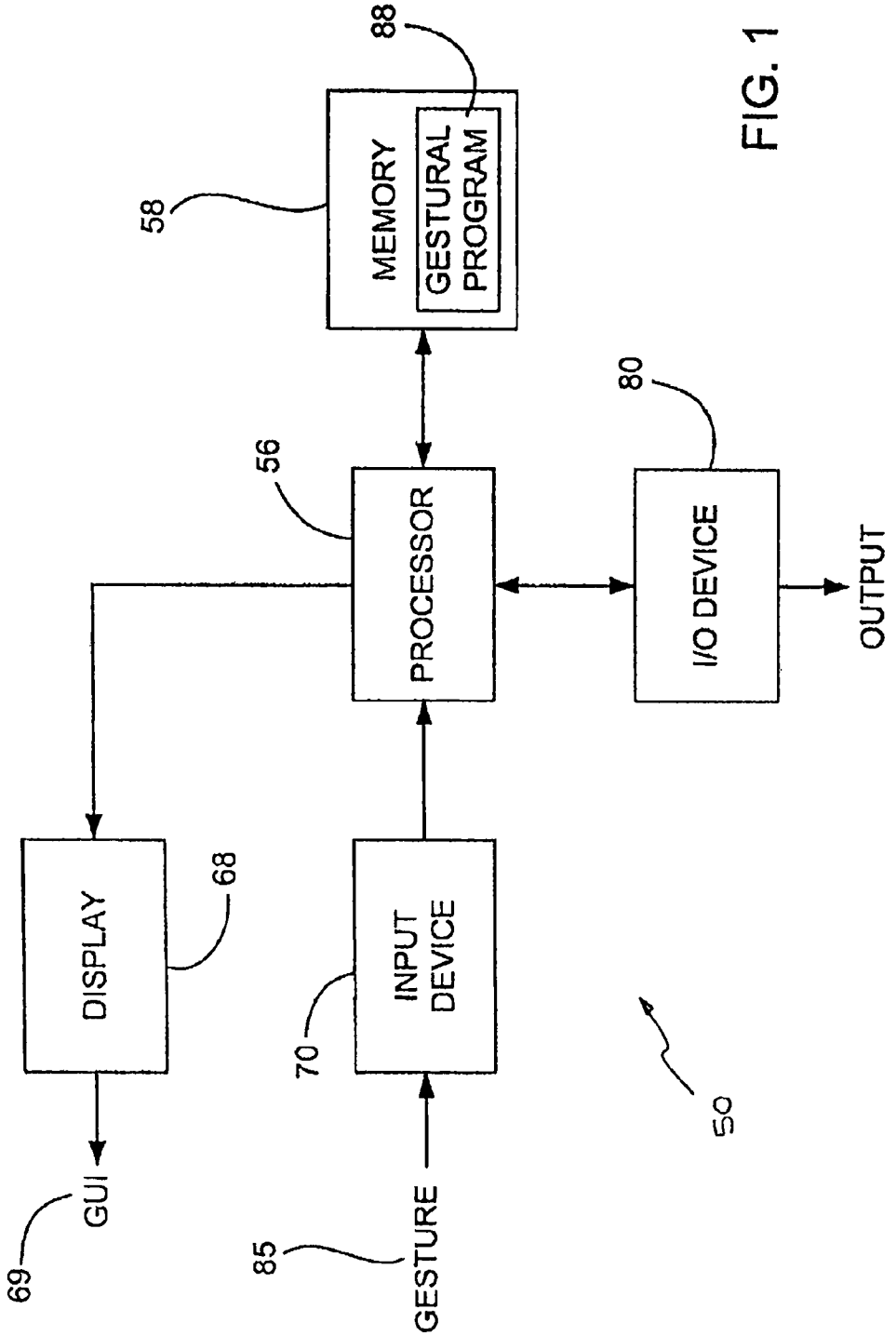
MEMORY
GESTURAL PROGRAM
88
58
PROCESSOR
56
I/O DEVICE
80
OUTPUT
DISPLAY
68
INPUT DEVICE
70
GUI
69
GESTURE
85
50

FIG. 1

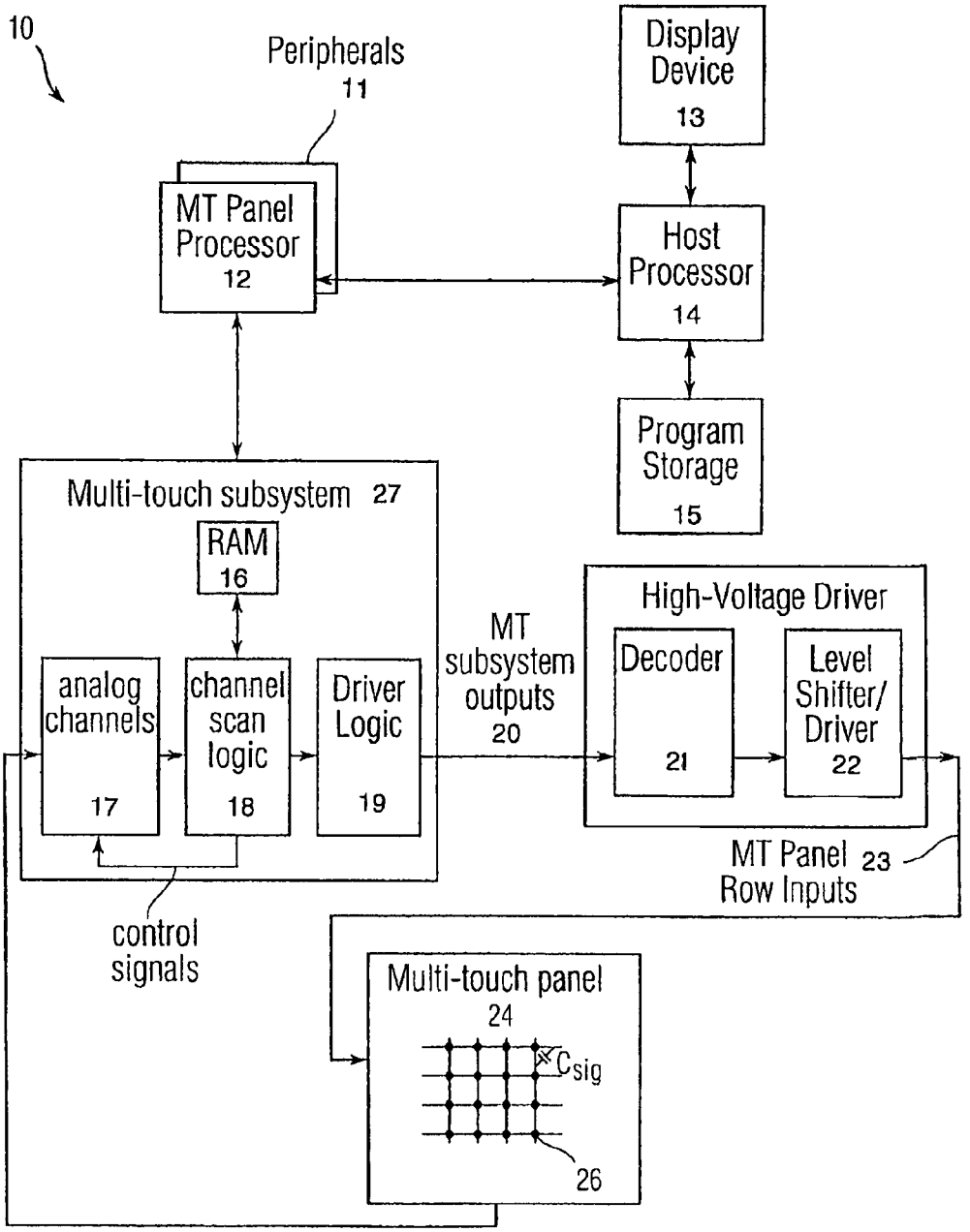
10
Peripherals
11
Display Device
13
MT Panel Processor
12
Host Processor
14
Program Storage
15
Multi-touch subsystem 27
RAM
16
analog channels
17
channel scan logic
18
Driver Logic
19
MT subsystem outputs
20
High-Voltage Driver
Decoder
21
Level Shifter/ Driver
22
MT Panel 23
Row Inputs
control signals
Multi-touch panel
24
Csig
26

Fig. 2

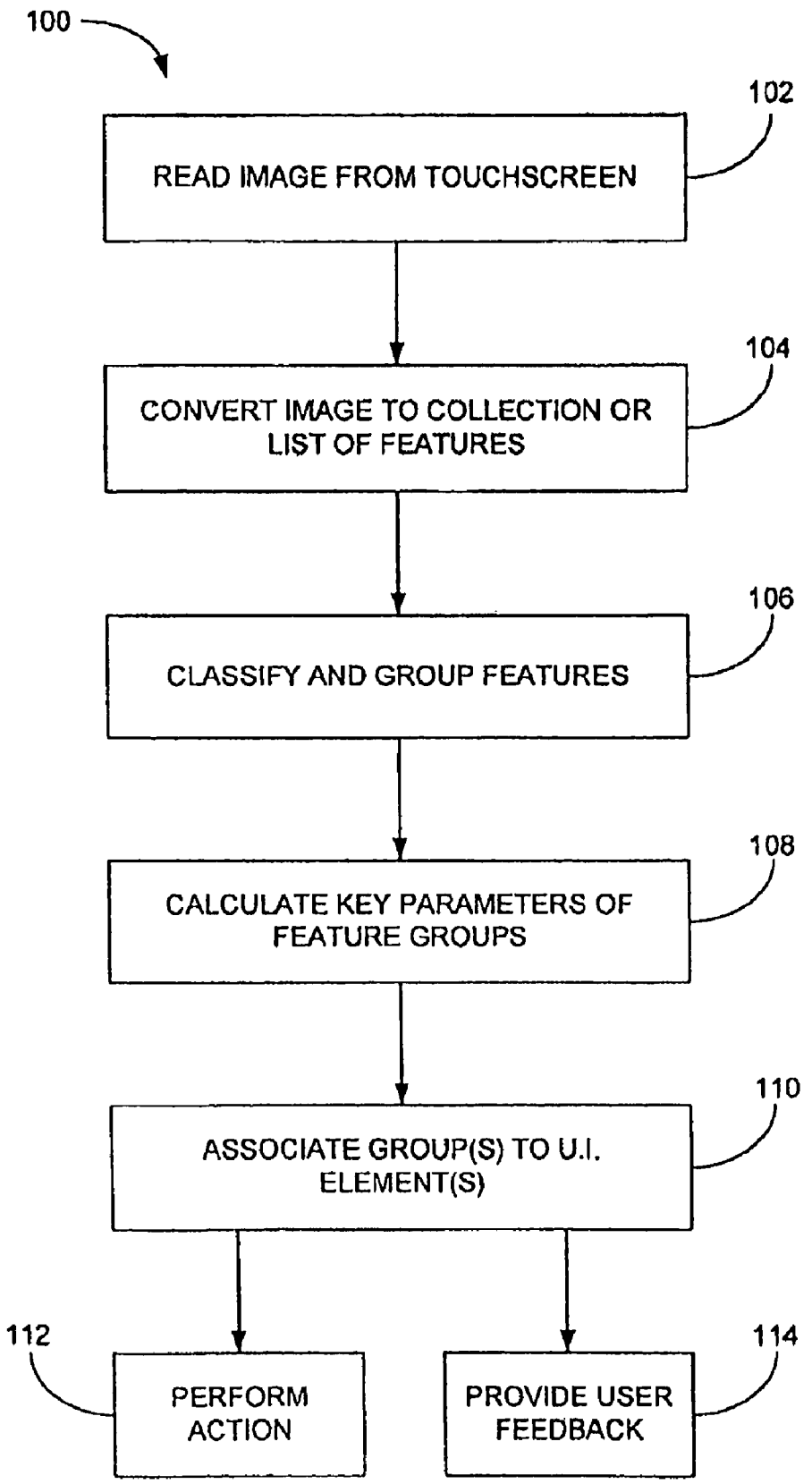
100
102
READ IMAGE FROM TOUCHSCREEN
104
CONVERT IMAGE TO COLLECTION OR LIST OF FEATURES
106
CLASSIFY AND GROUP FEATURES
108
CALCULATE KEY PARAMETERS OF FEATURE GROUPS
110
ASSOCIATE GROUP(S) TO U.I. ELEMENT(S)
112
PERFORM ACTION
114
PROVIDE USER FEEDBACK

FIG. 3

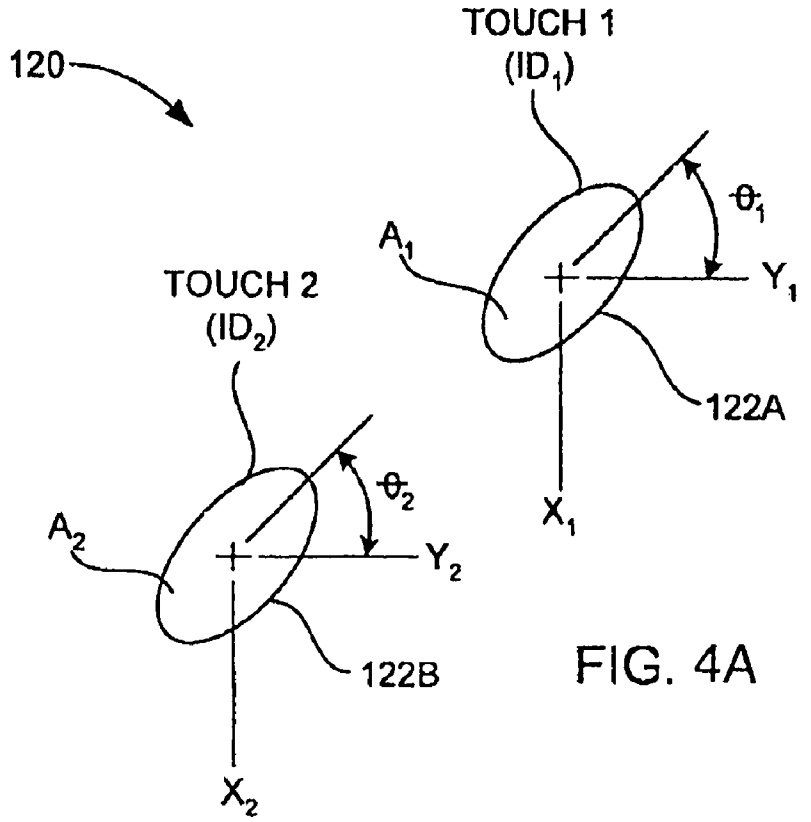
120
TOUCH 1
(ID1)
θ1
A1
Y1
122A
X1
TOUCH 2
(ID2)
θ2
A2
Y2
122B
X2

FIG. 4A

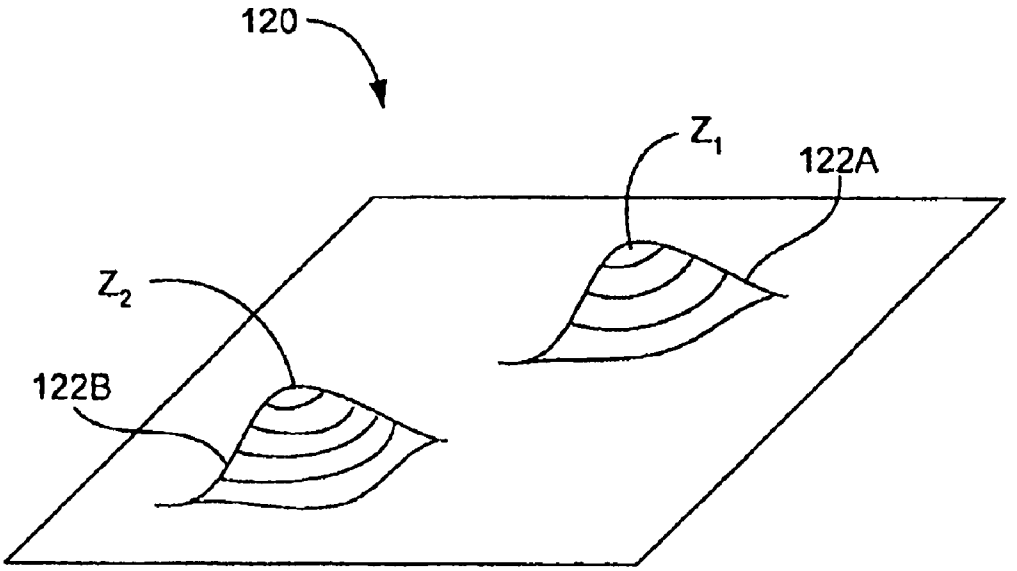
120
Z1
122A
Z2
122B

FIG. 4B

$$D_{AVG} = \frac{D_2+D_1}{2}$$

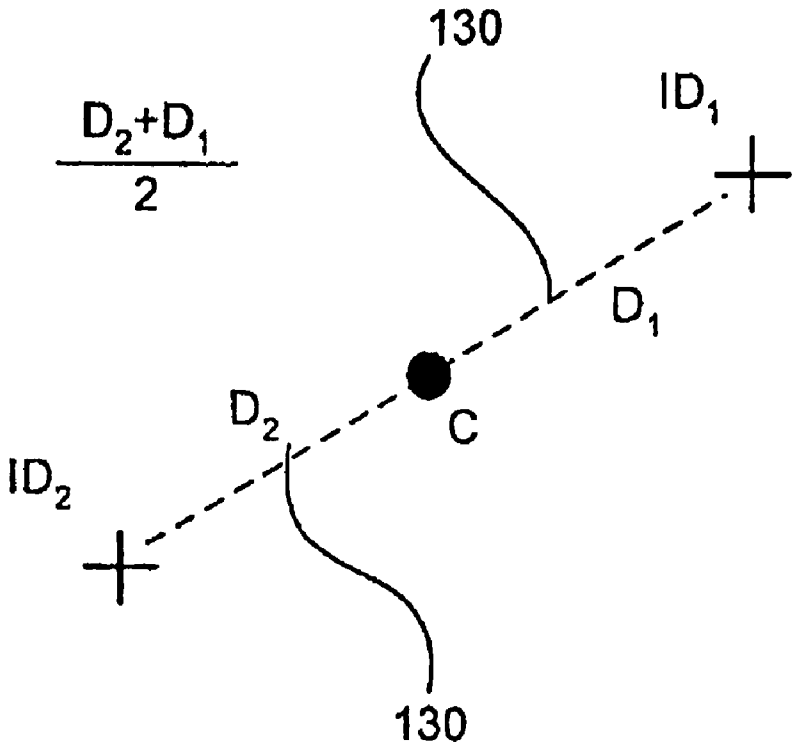

FIG. 5

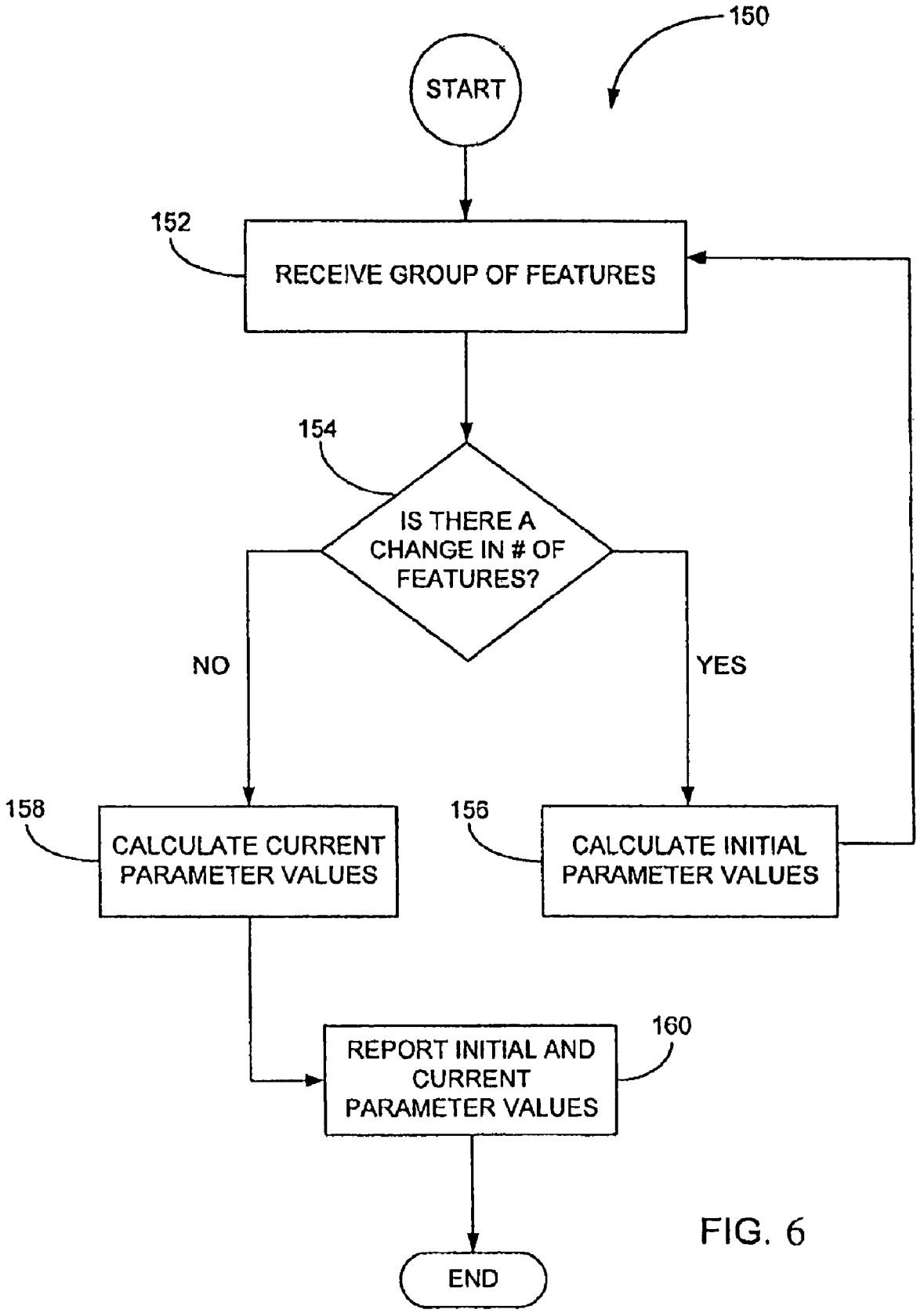
150
START
152
RECEIVE GROUP OF FEATURES
154
IS THERE A CHANGE IN # OF FEATURES?
NO
YES
158
CALCULATE CURRENT PARAMETER VALUES
156
CALCULATE INITIAL PARAMETER VALUES
160
REPORT INITIAL AND CURRENT PARAMETER VALUES
END

FIG. 6

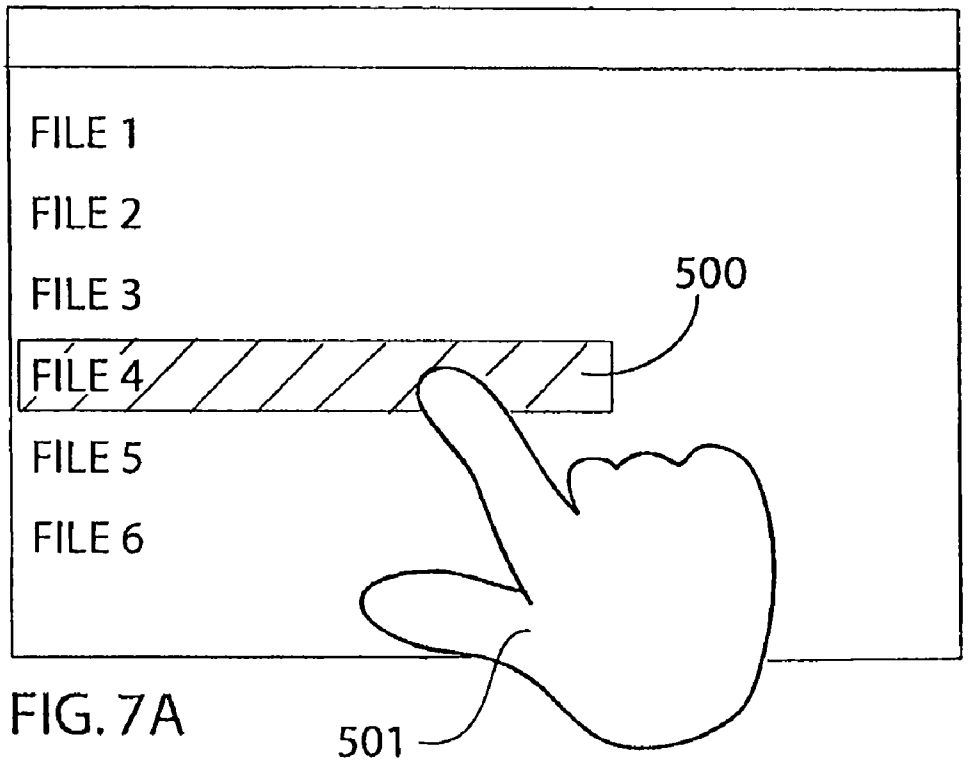
FILE 1
FILE 2
FILE 3
FILE 4
FILE 5
FILE 6
500
501

FIG. 7A

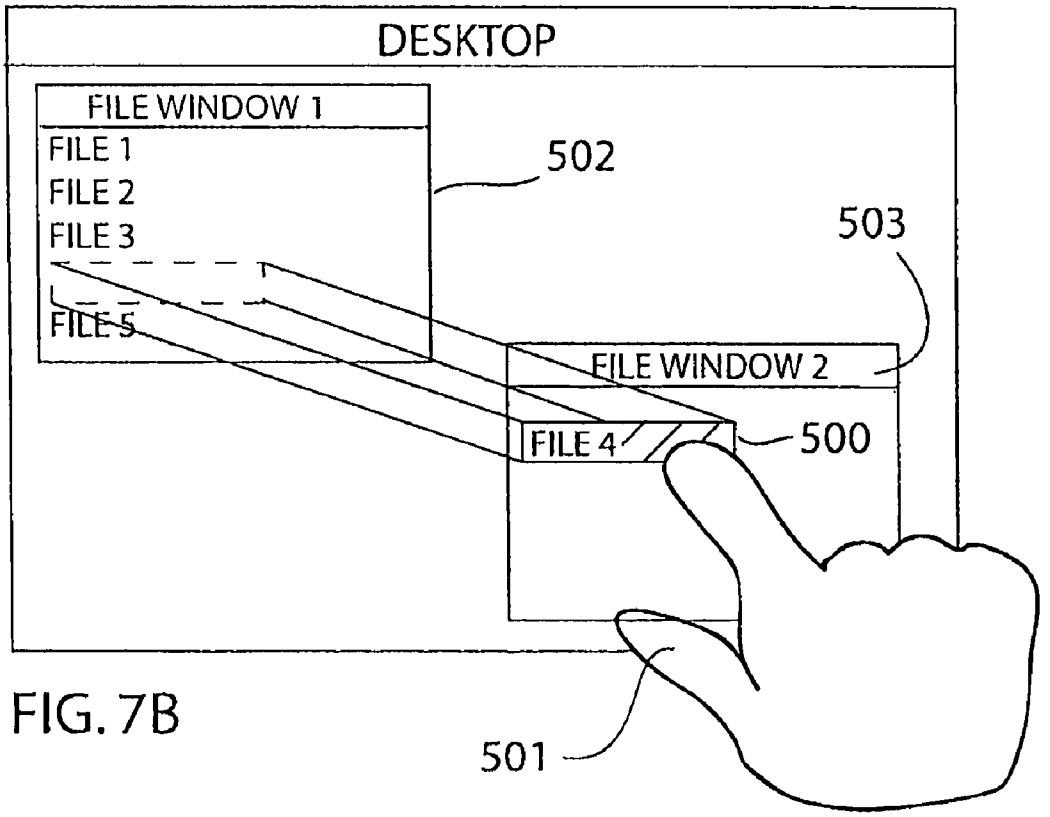
DESKTOP
FILE WINDOW 1
FILE 1
FILE 2
FILE 3
FILE 5
502
503
FILE WINDOW 2
FILE 4
500
501

FIG. 7B

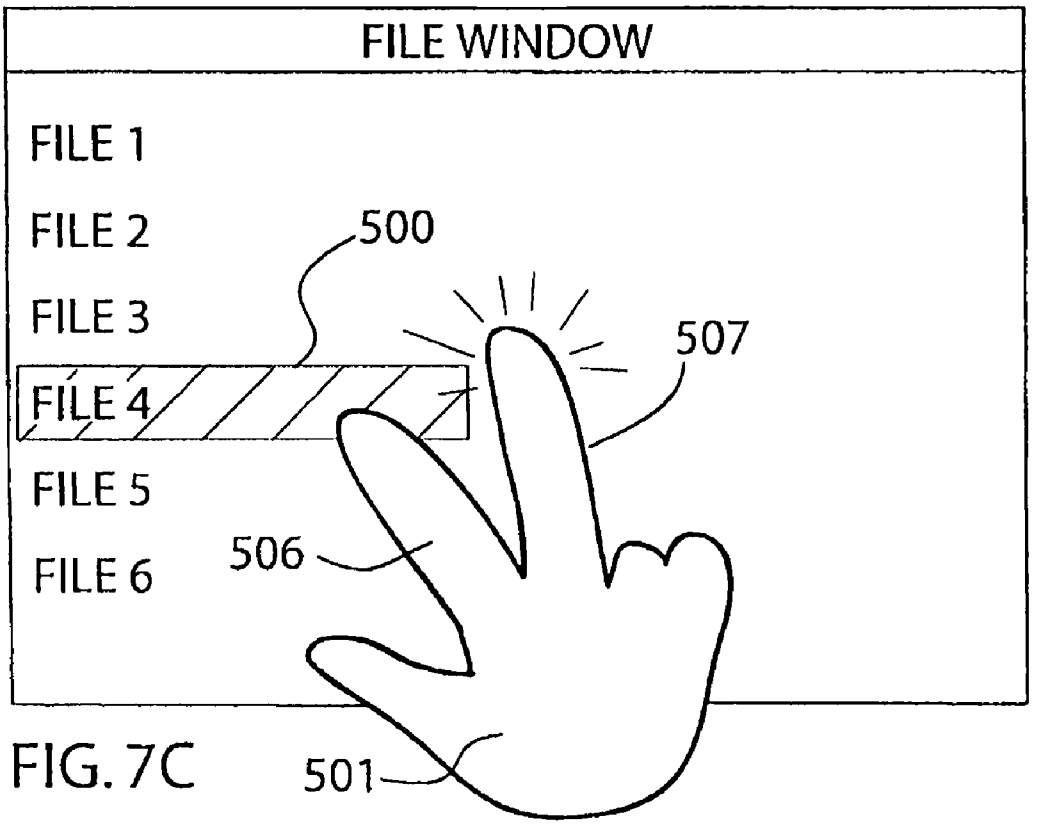
FILE WINDOW
FILE 1
FILE 2
FILE 3
FILE 4
FILE 5
FILE 6
500
507
506
501

FIG. 7C

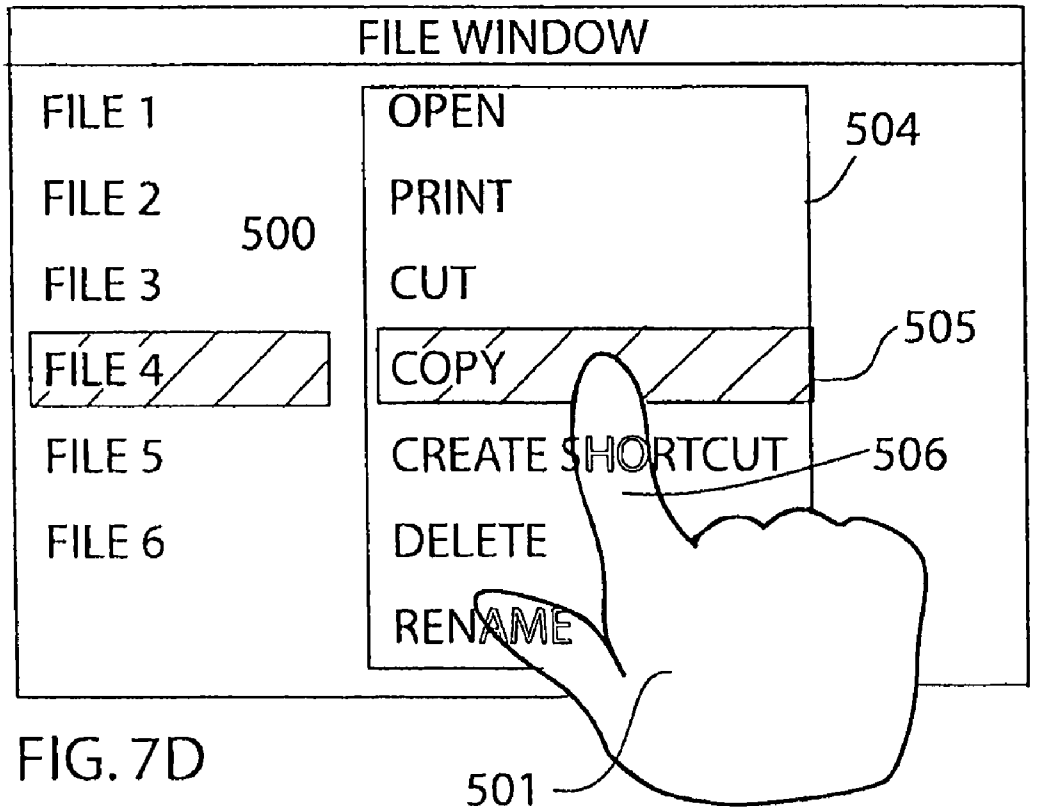
FILE WINDOW
FILE 1
FILE 2
FILE 3
FILE 4
FILE 5
FILE 6
500
OPEN
PRINT
CUT
COPY
CREATE SHORTCUT
DELETE
RENAME
504
505
506
501

FIG. 7D

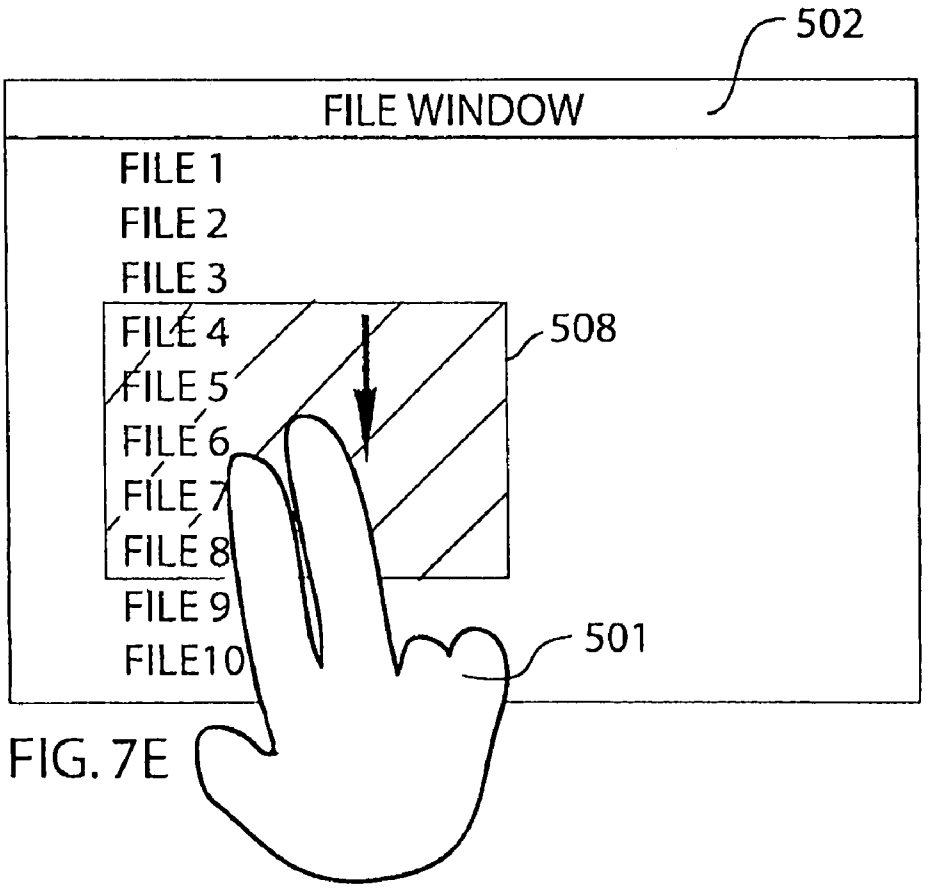
502
FILE WINDOW
FILE 1
FILE 2
FILE 3
FILE 4
FILE 5
FILE 6
FILE 7
FILE 8
FILE 9
FILE10
508
501

FIG. 7E

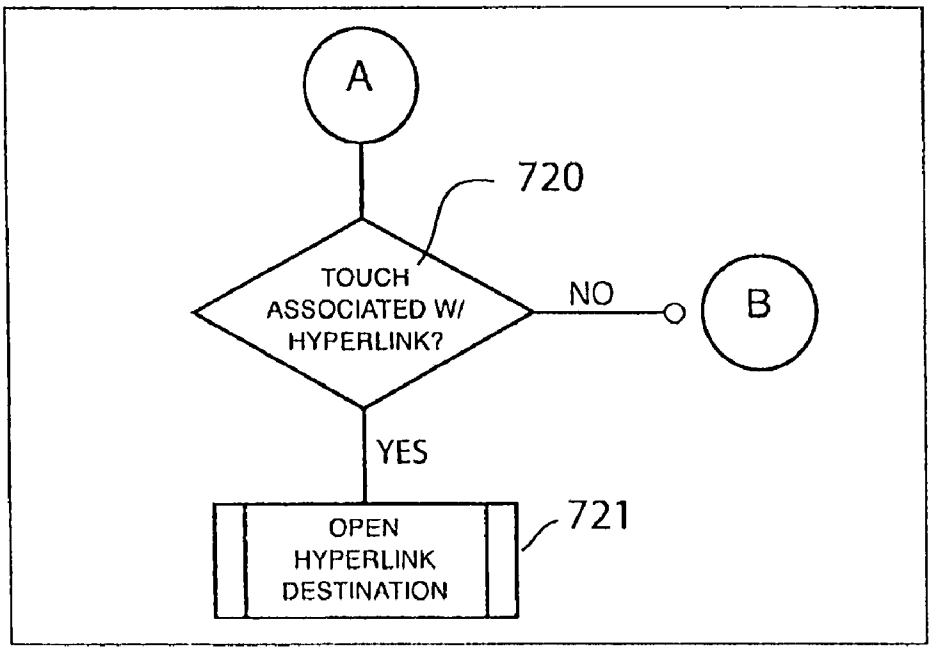
A
720
TOUCH ASSOCIATED W/ HYPERLINK?
NO
B
YES
OPEN HYPERLINK DESTINATION
721

FIG. 7G

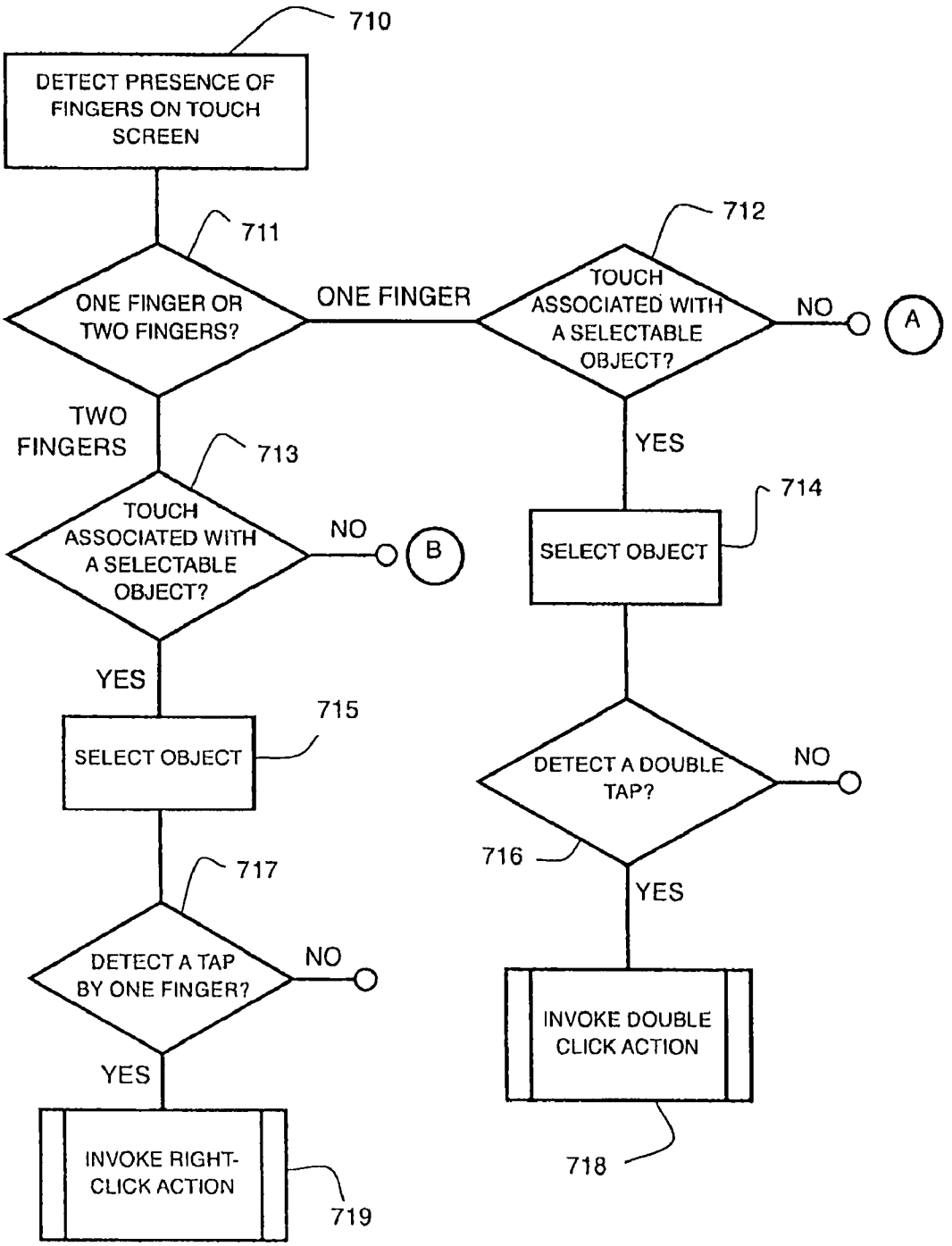
710
DETECT PRESENCE OF FINGERS ON TOUCH SCREEN
711
ONE FINGER OR TWO FINGERS?
ONE FINGER
712
TOUCH ASSOCIATED WITH A SELECTABLE OBJECT?
NO
A
YES
TWO FINGERS
713
TOUCH ASSOCIATED WITH A SELECTABLE OBJECT?
NO
B
714
SELECT OBJECT
YES
715
SELECT OBJECT
DETECT A DOUBLE TAP?
NO
716
YES
717
DETECT A TAP BY ONE FINGER?
NO
YES
INVOKE DOUBLE CLICK ACTION
INVOKE RIGHT-CLICK ACTION
718
719

FIG. 7F

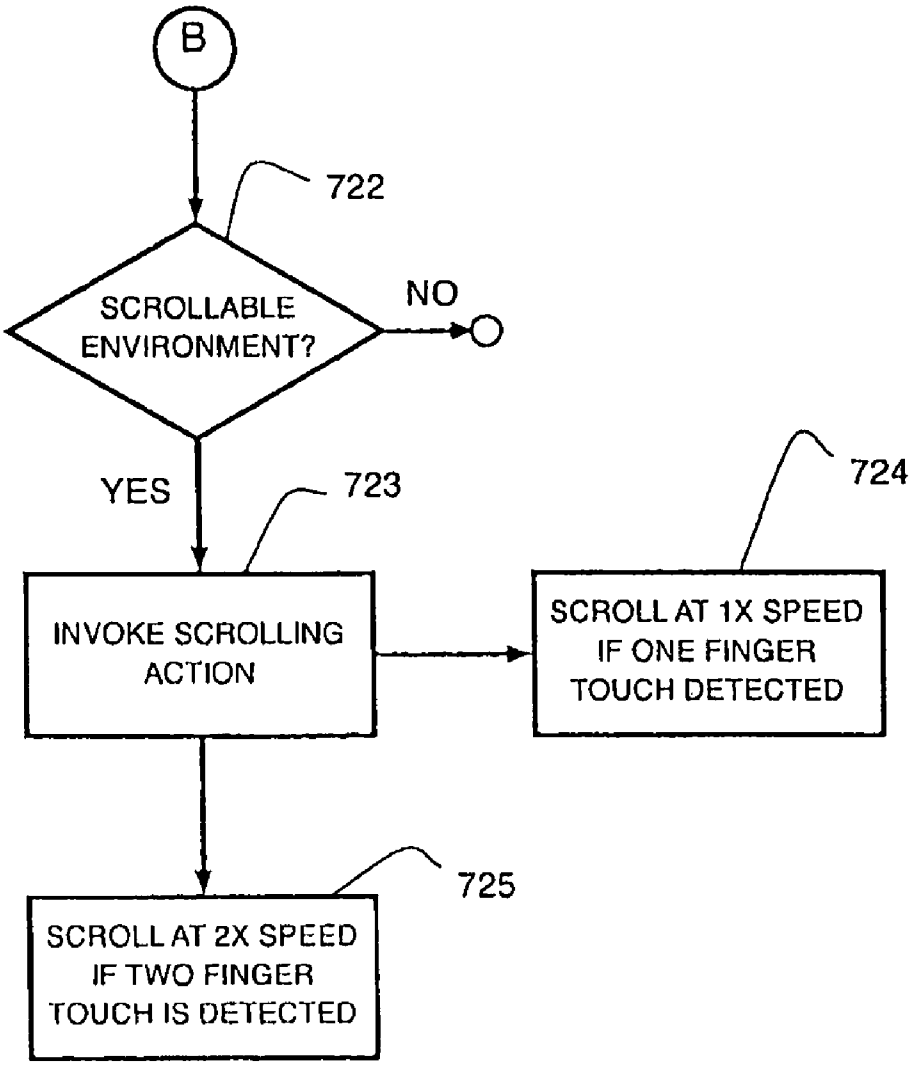
B
722
SCROLLABLE ENVIRONMENT?
NO
YES
723
INVOKE SCROLLING ACTION
724
SCROLL AT 1X SPEED IF ONE FINGER TOUCH DETECTED
725
SCROLL AT 2X SPEED IF TWO FINGER TOUCH IS DETECTED

FIG. 7H

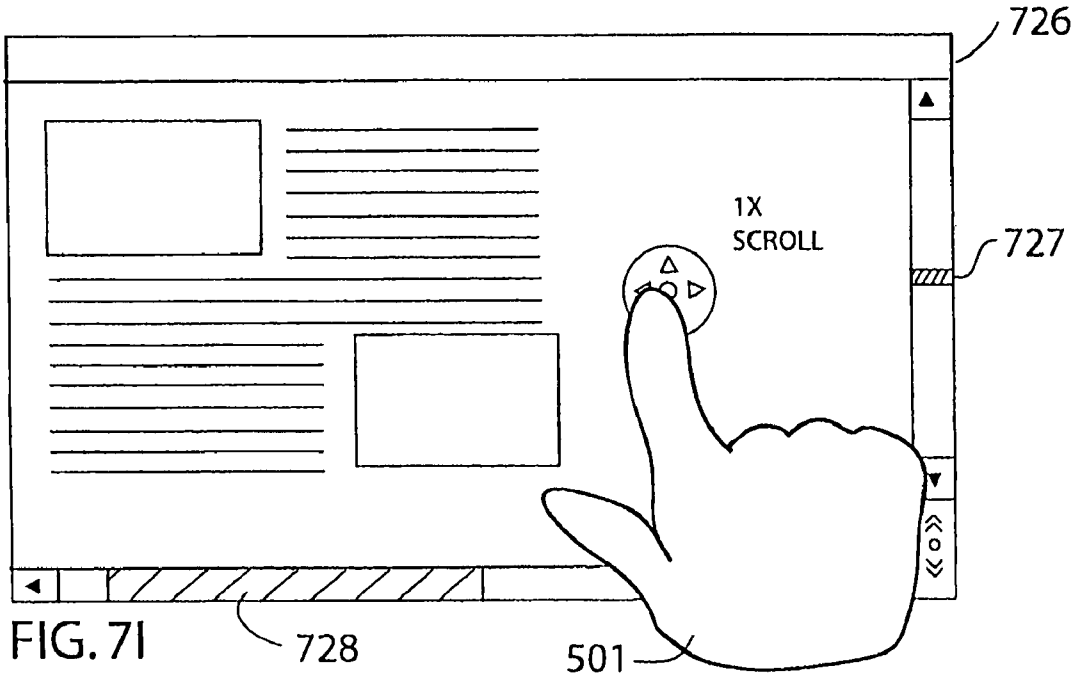

FIG. 7I

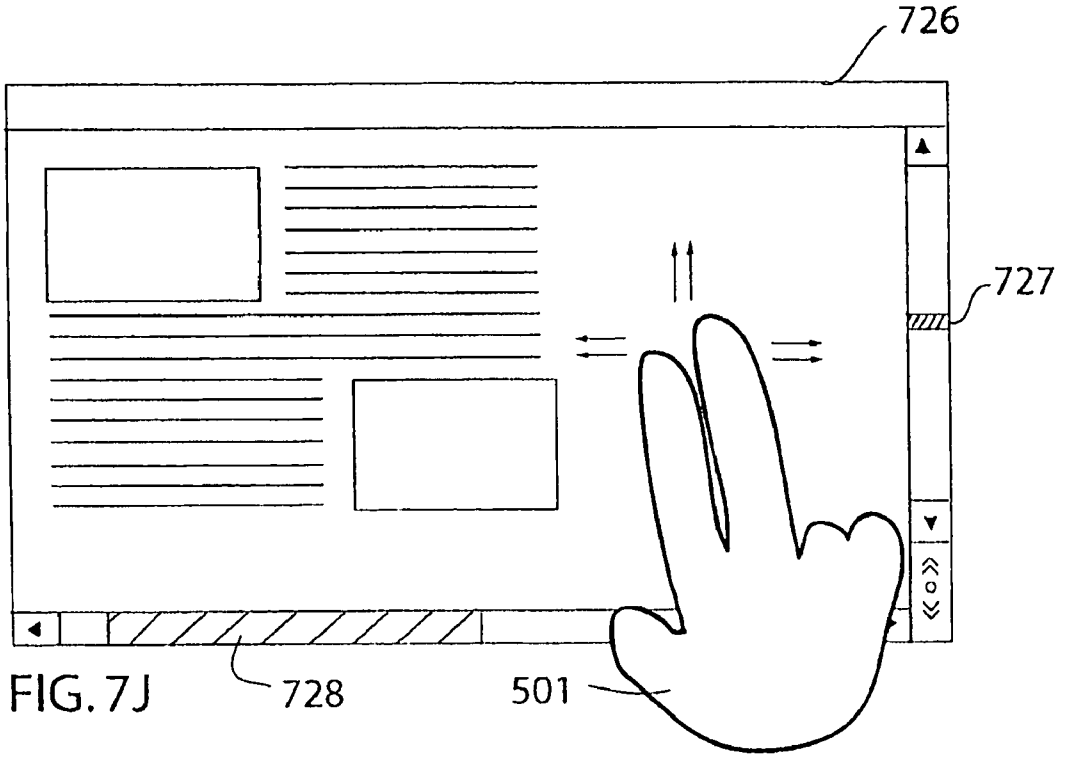

FIG. 7J

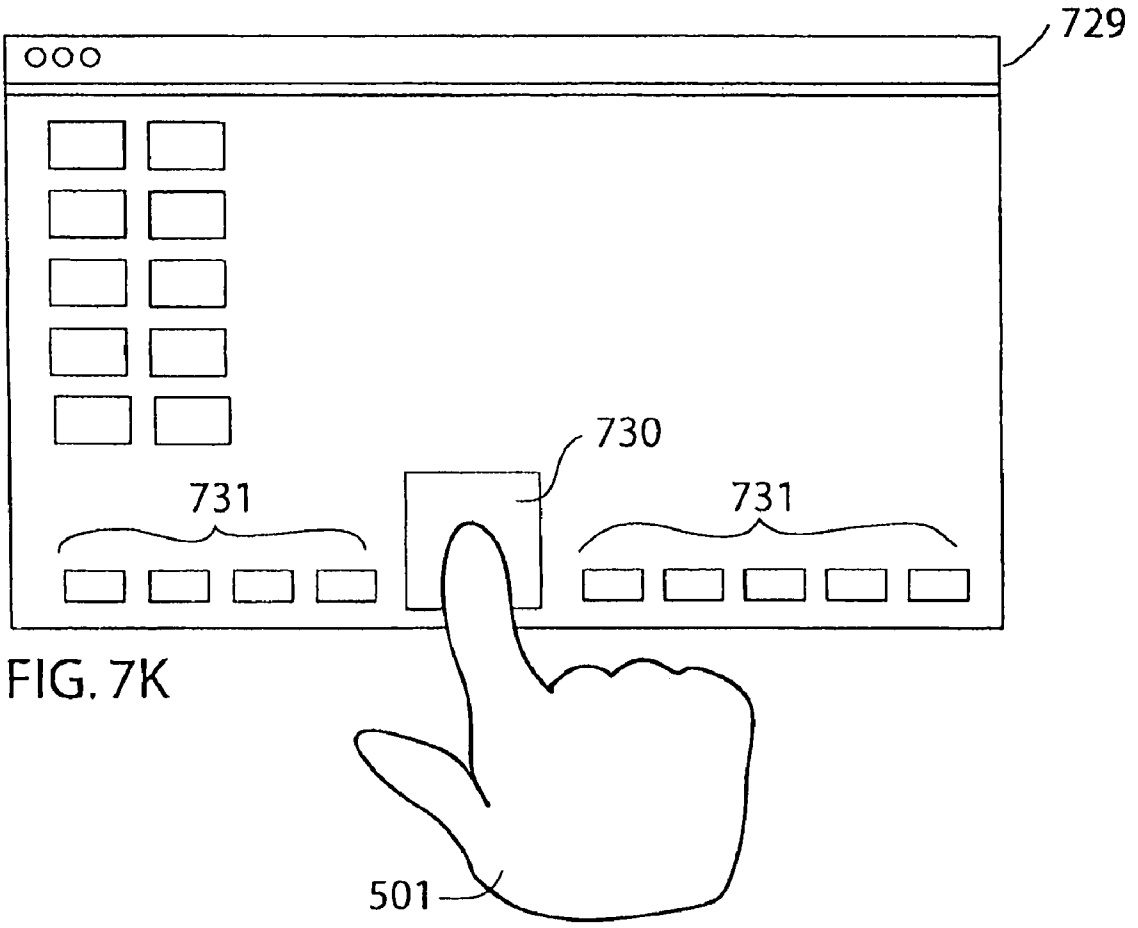

FIG. 7K

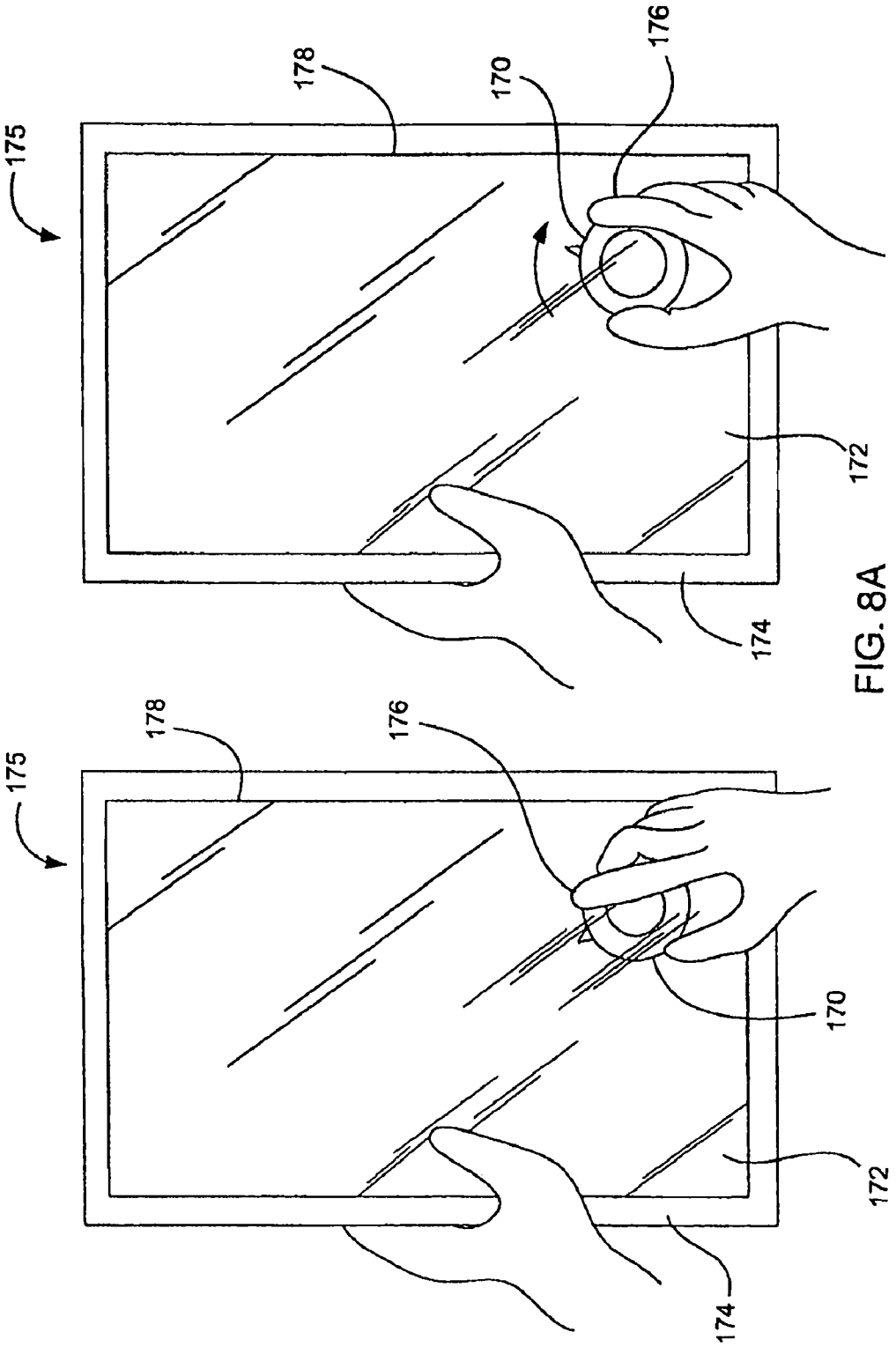

FIG. 8A

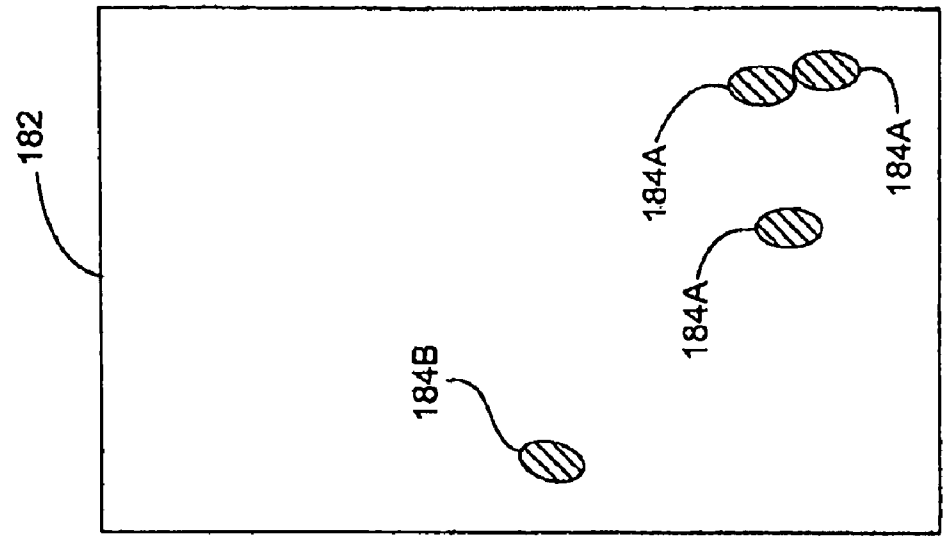

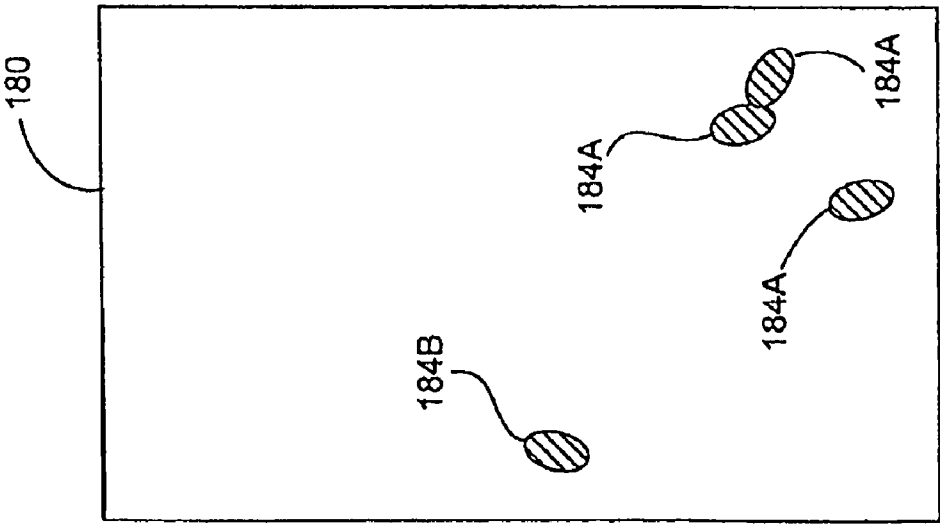

FIG. 8B

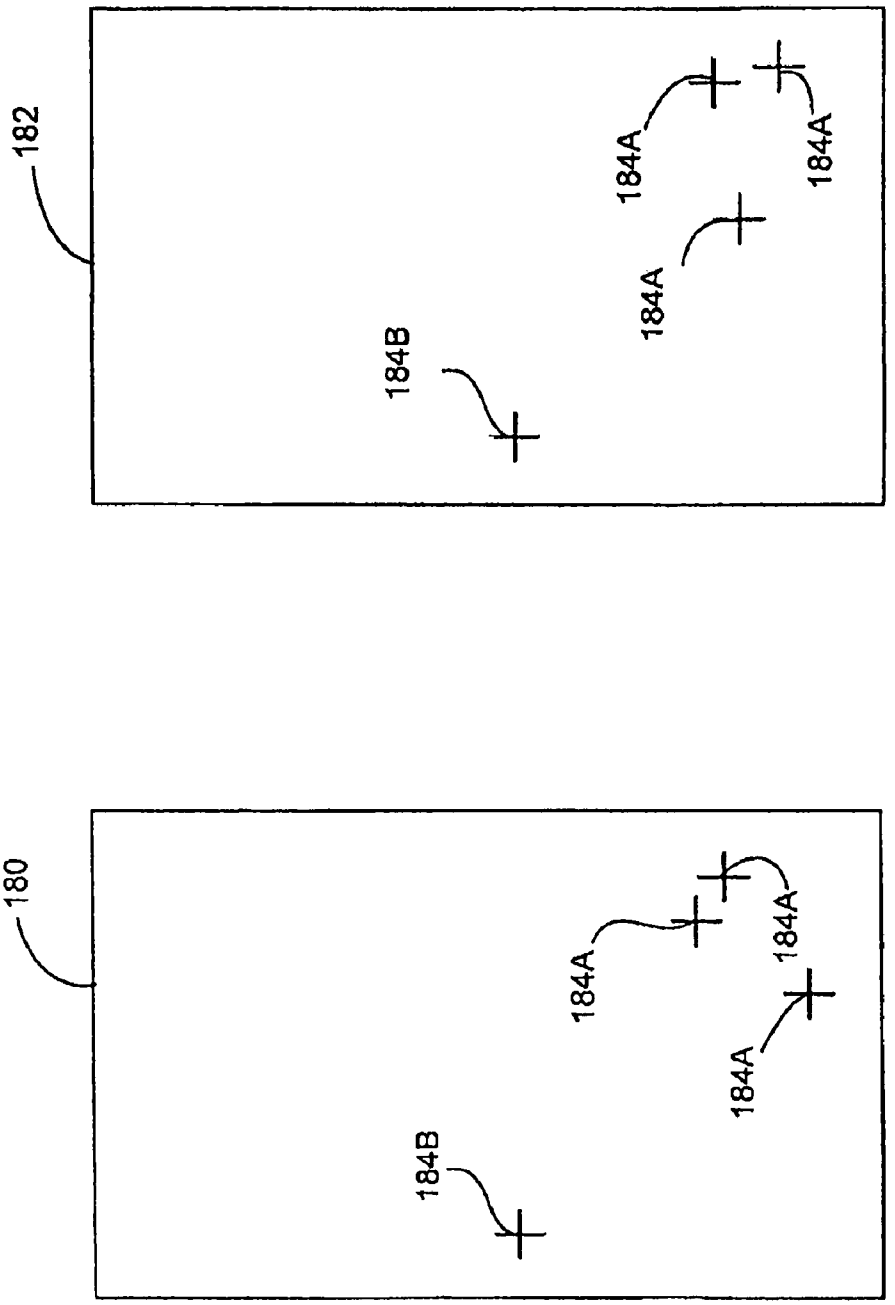

FIG. 8C

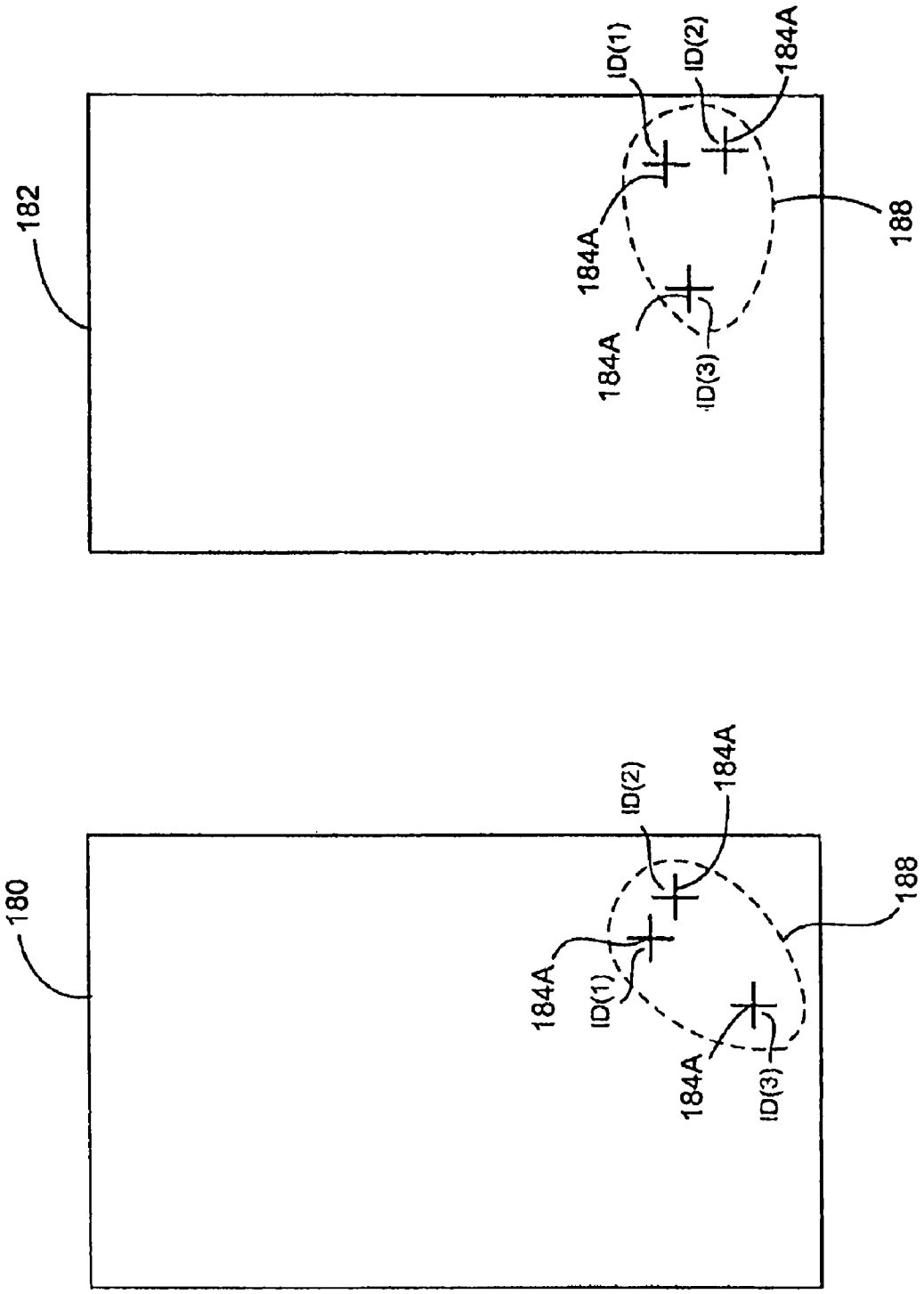
182
ID(1)
ID(2)
184A
184A
184A
ID(3)
188
180
ID(2)
184A
184A
ID(1)
184A
ID(3)
188

FIG. 8D

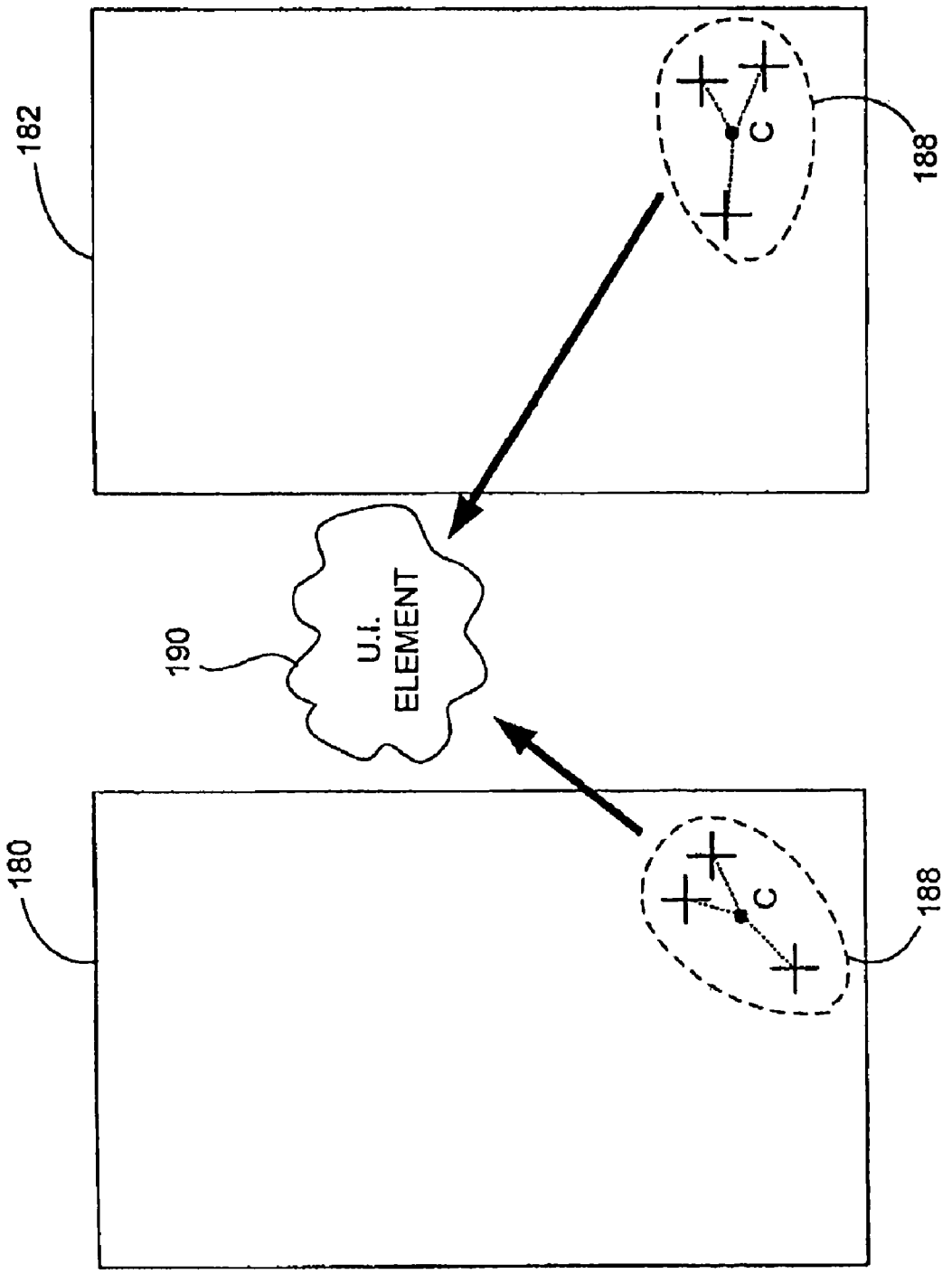

FIG. 8E

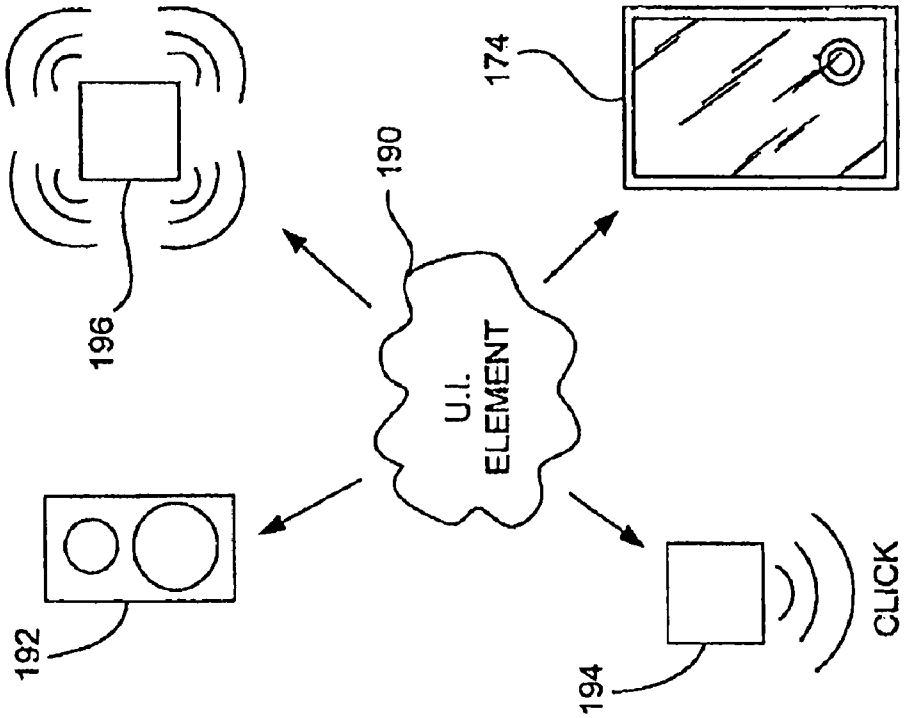

FIG. 8G

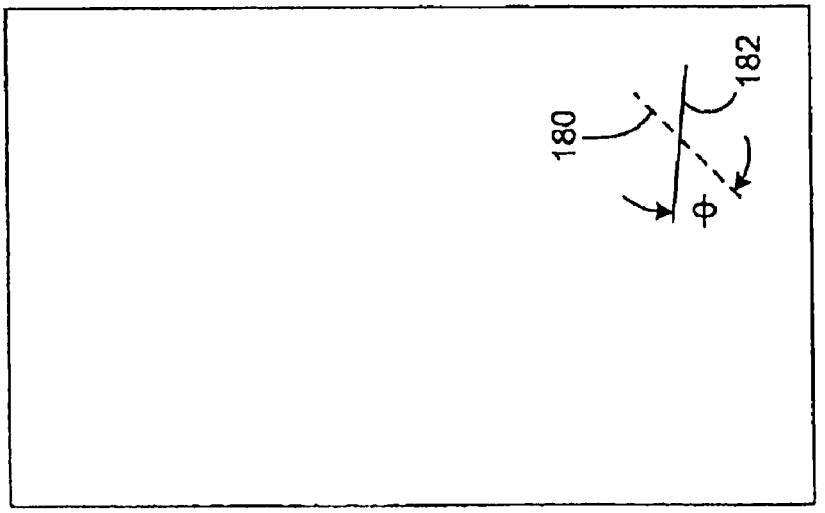

FIG. 8F

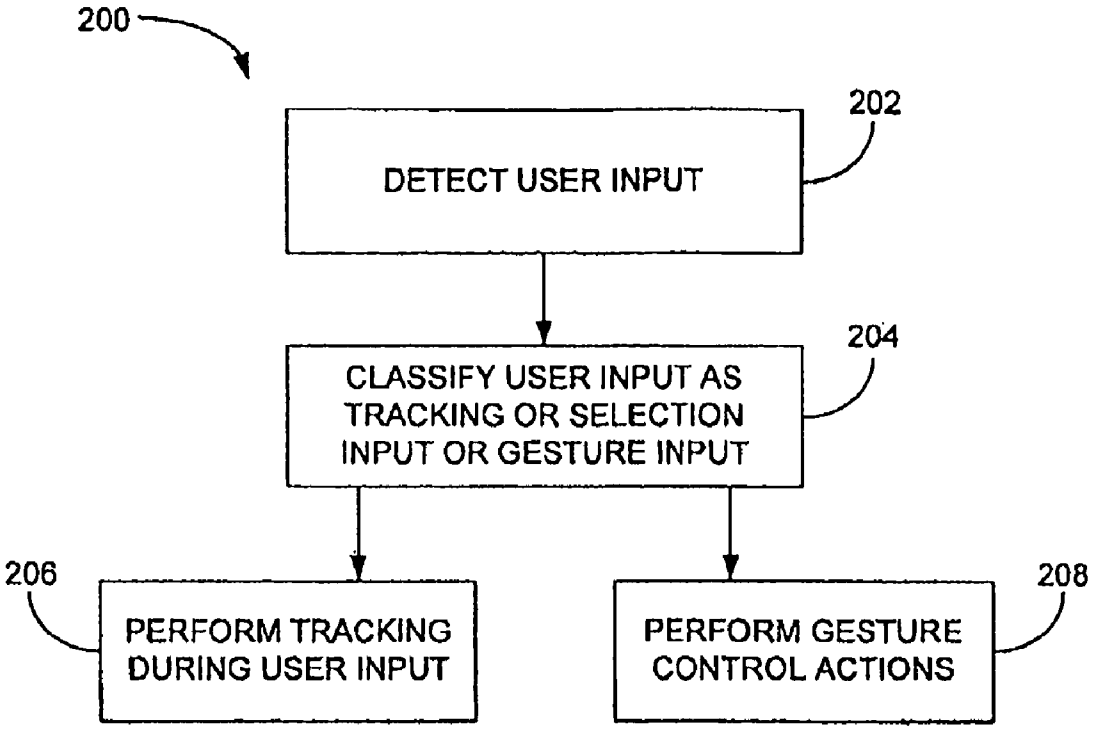
200
202
DETECT USER INPUT
204
CLASSIFY USER INPUT AS TRACKING OR SELECTION INPUT OR GESTURE INPUT
206
PERFORM TRACKING DURING USER INPUT
208
PERFORM GESTURE CONTROL ACTIONS

FIG. 9

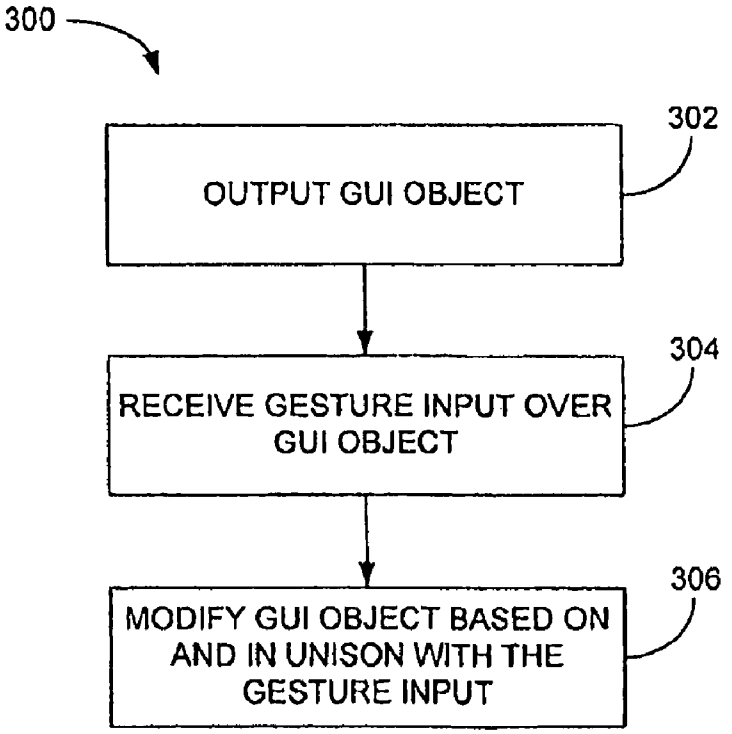
300
302
OUTPUT GUI OBJECT
304
RECEIVE GESTURE INPUT OVER GUI OBJECT
306
MODIFY GUI OBJECT BASED ON AND IN UNISON WITH THE GESTURE INPUT

FIG. 11

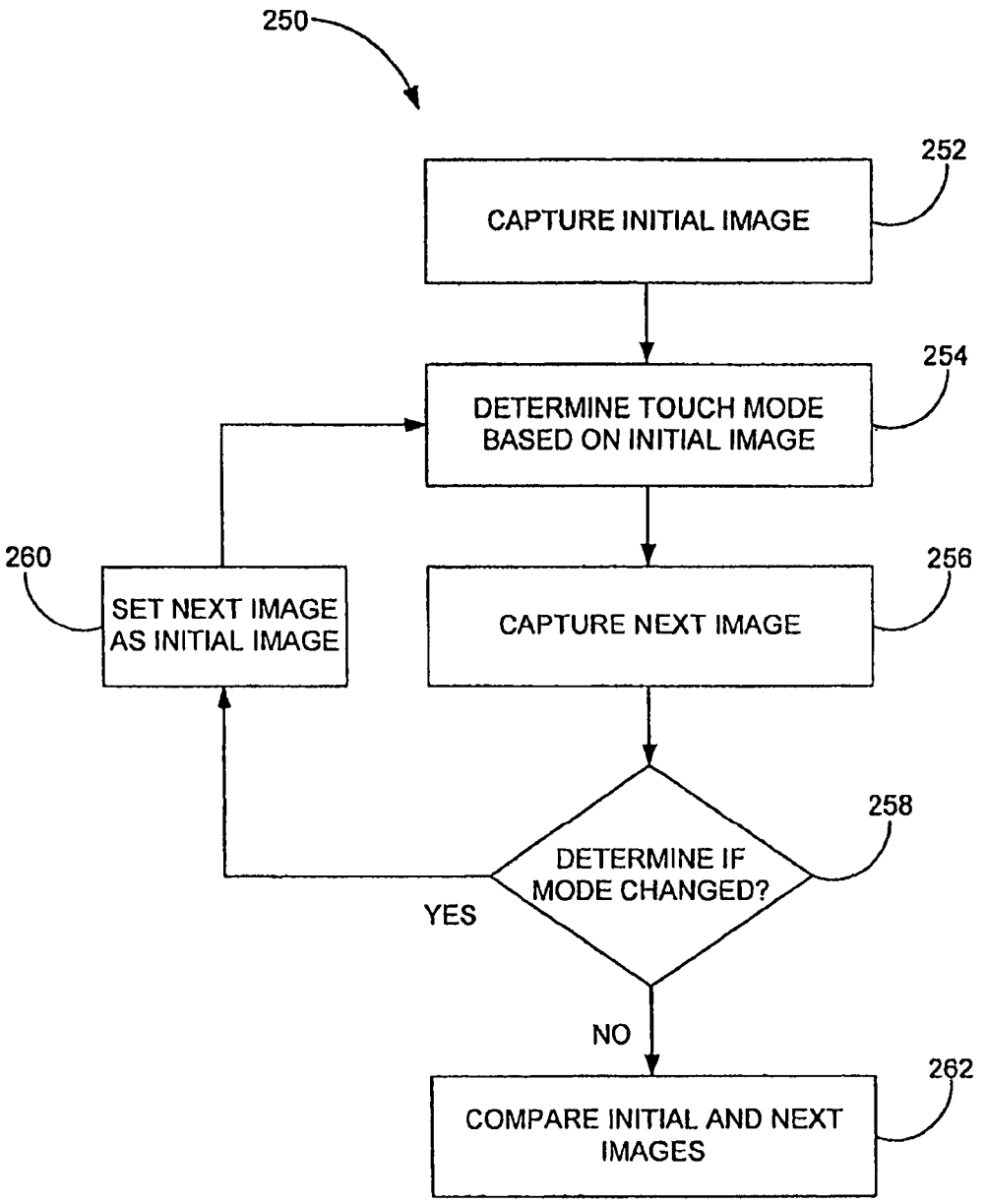
250
252
CAPTURE INITIAL IMAGE
254
DETERMINE TOUCH MODE BASED ON INITIAL IMAGE
260
SET NEXT IMAGE AS INITIAL IMAGE
256
CAPTURE NEXT IMAGE
258
DETERMINE IF MODE CHANGED?
YES
NO
262
COMPARE INITIAL AND NEXT IMAGES

FIG. 10

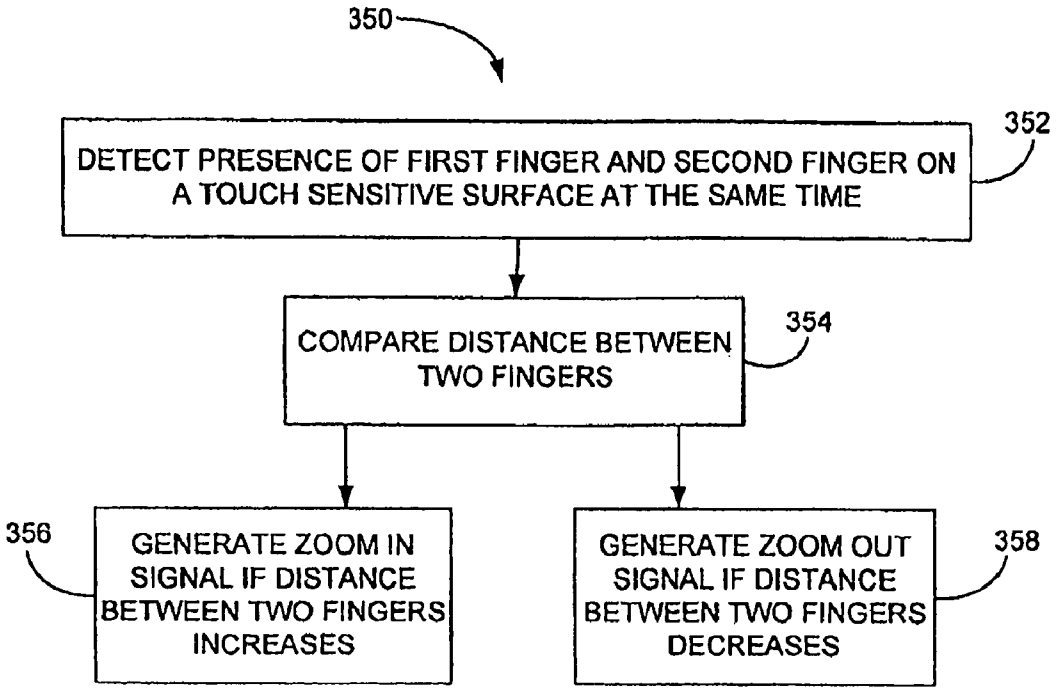
350
DETECT PRESENCE OF FIRST FINGER AND SECOND FINGER ON A TOUCH SENSITIVE SURFACE AT THE SAME TIME
352
COMPARE DISTANCE BETWEEN TWO FINGERS
354
356
GENERATE ZOOM IN SIGNAL IF DISTANCE BETWEEN TWO FINGERS INCREASES
GENERATE ZOOM OUT SIGNAL IF DISTANCE BETWEEN TWO FINGERS DECREASES
358

FIG. 12

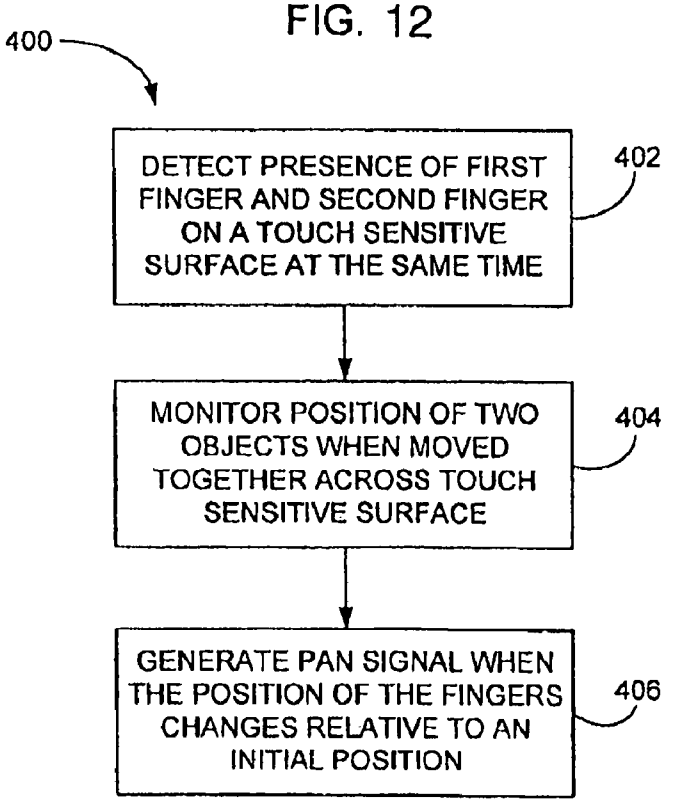
400
DETECT PRESENCE OF FIRST FINGER AND SECOND FINGER ON A TOUCH SENSITIVE SURFACE AT THE SAME TIME
402
MONITOR POSITION OF TWO OBJECTS WHEN MOVED TOGETHER ACROSS TOUCH SENSITIVE SURFACE
404
GENERATE PAN SIGNAL WHEN THE POSITION OF THE FINGERS CHANGES RELATIVE TO AN INITIAL POSITION
406

FIG. 14

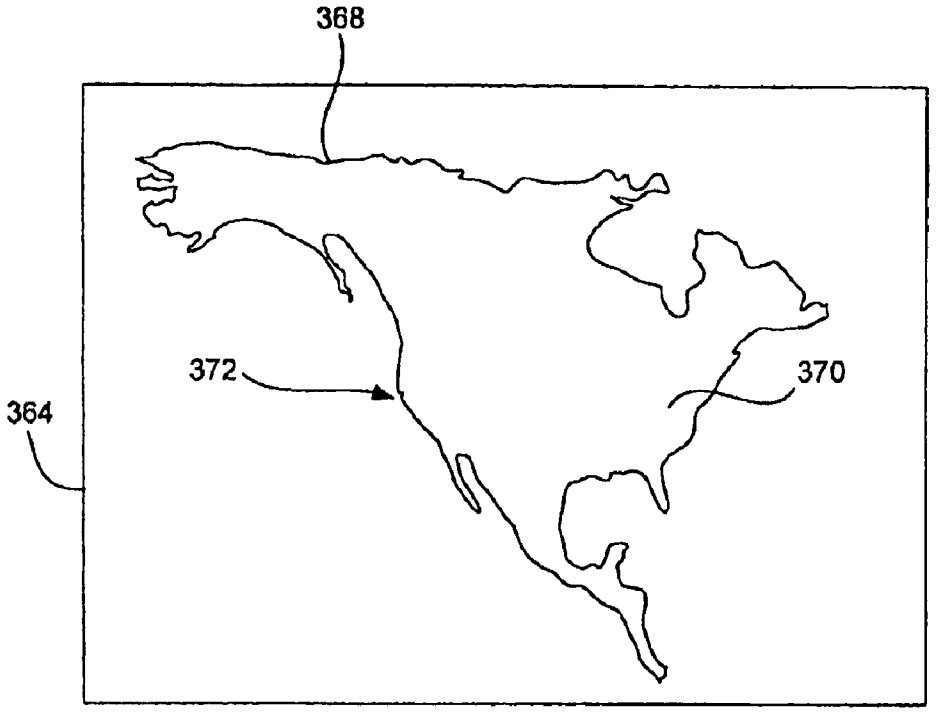

FIG. 13A

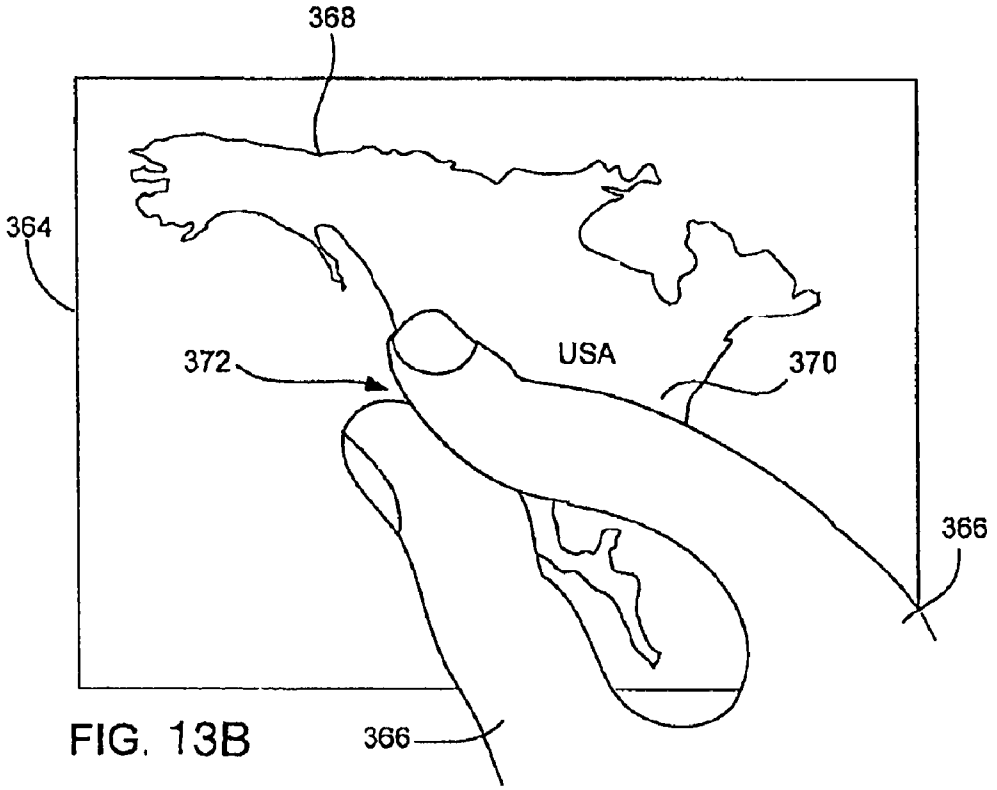

FIG. 13B

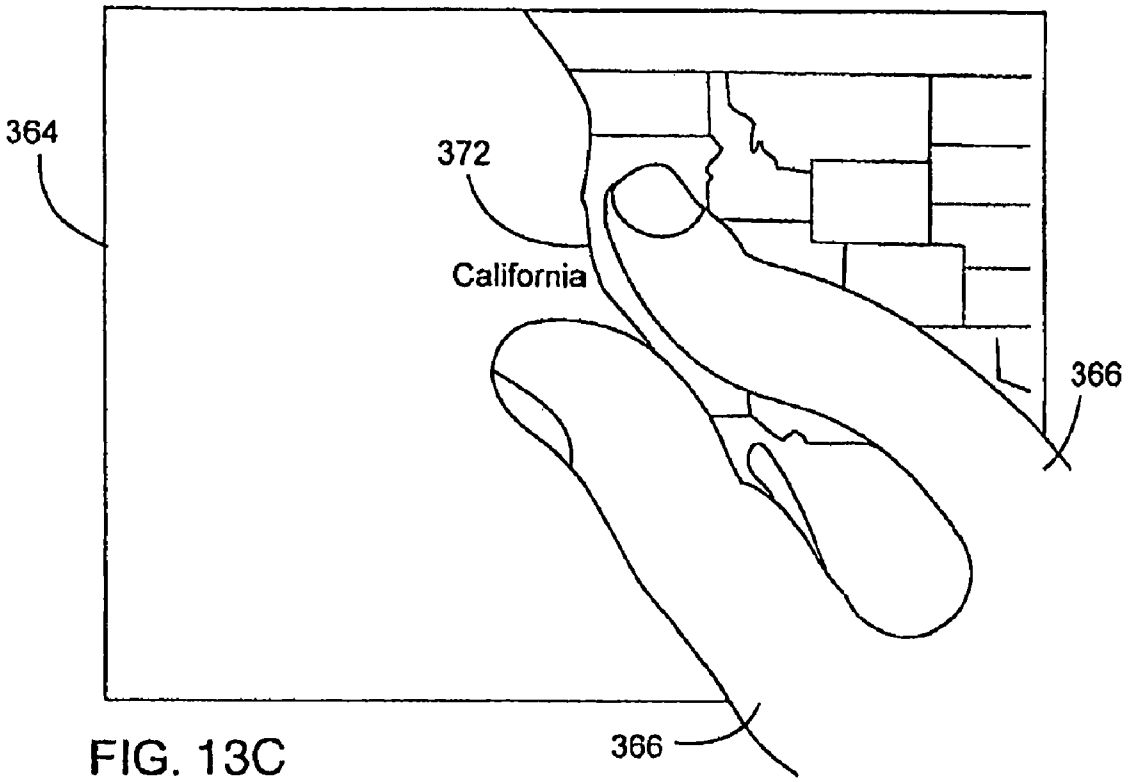

FIG. 13C

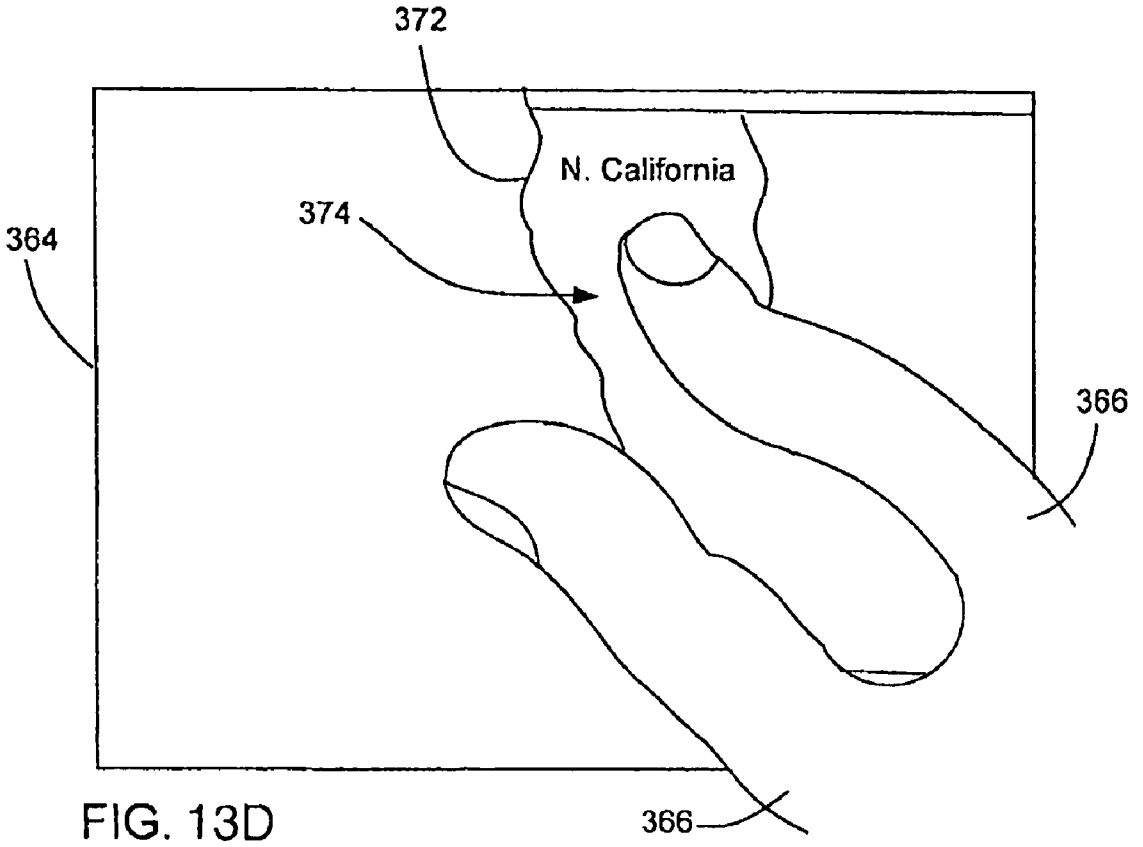

FIG. 13D

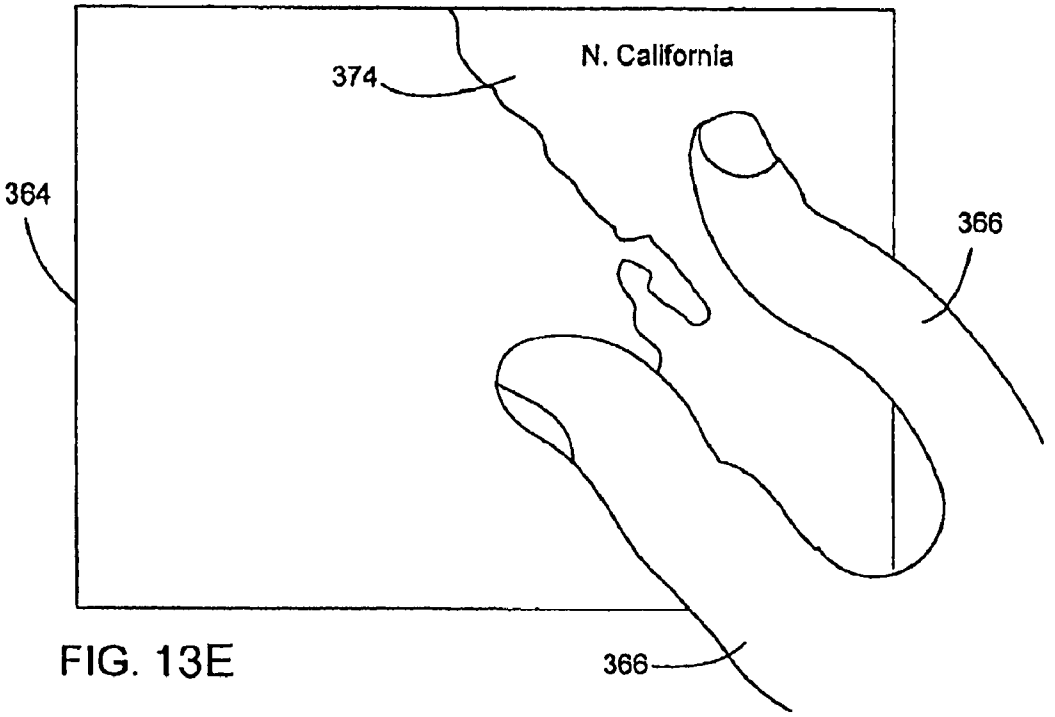

FIG. 13E

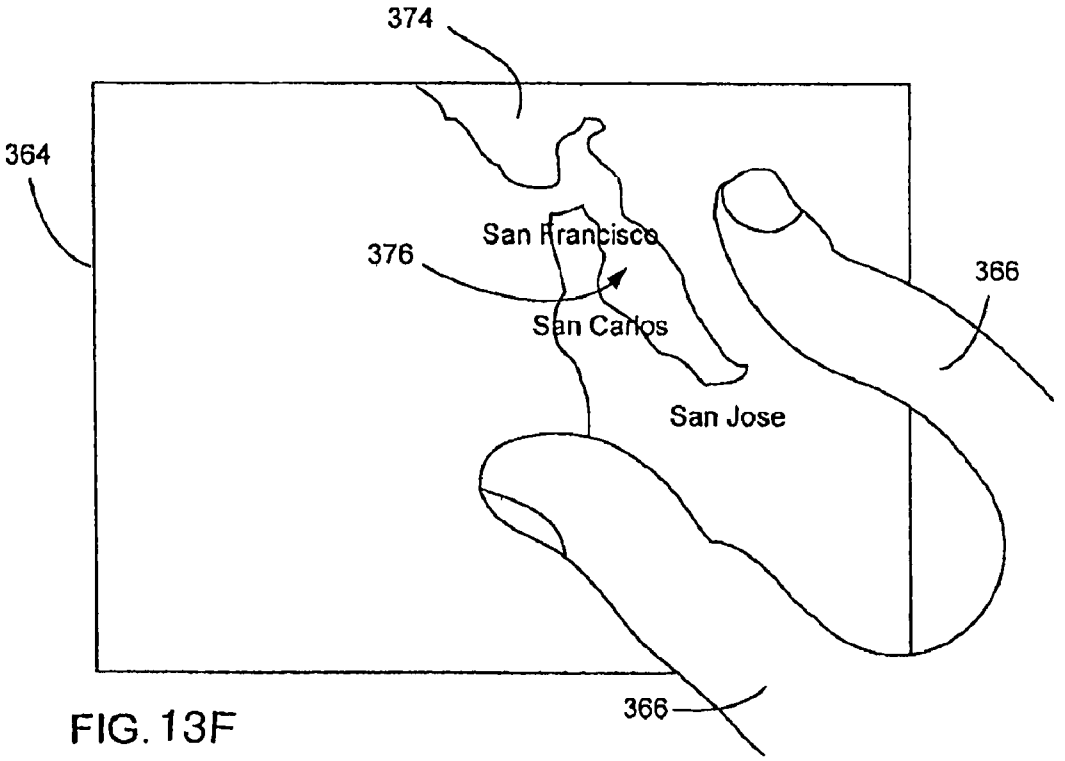

FIG. 13F

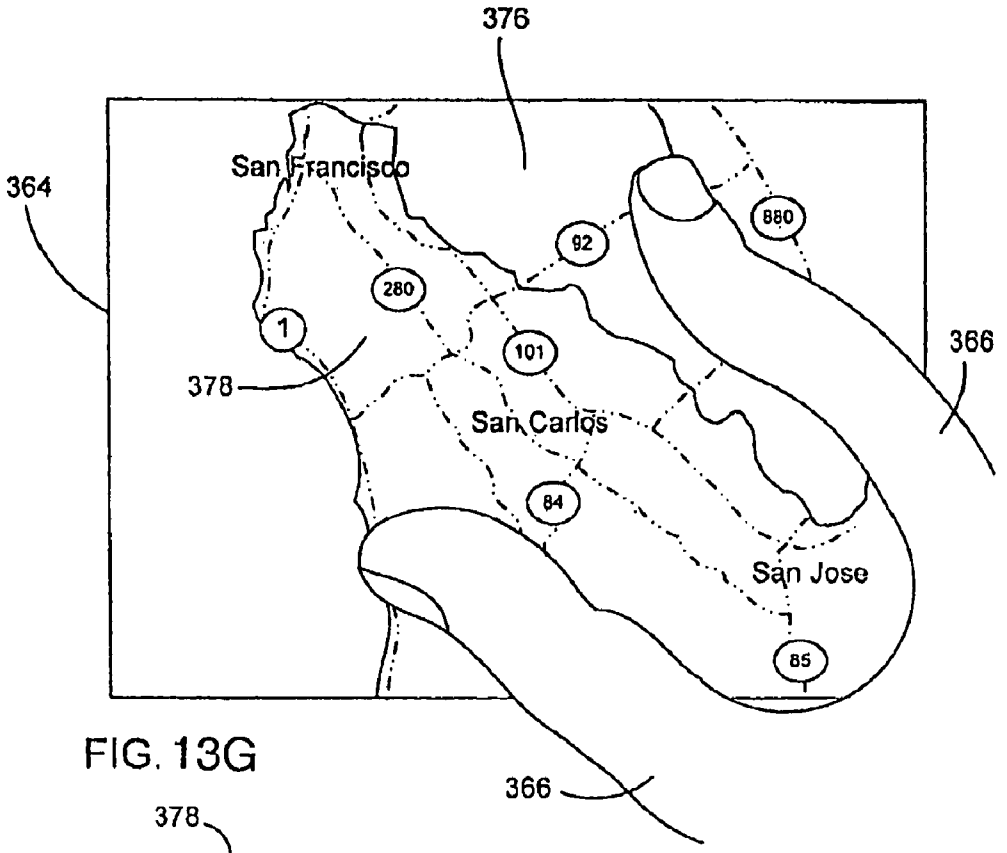

FIG. 13G

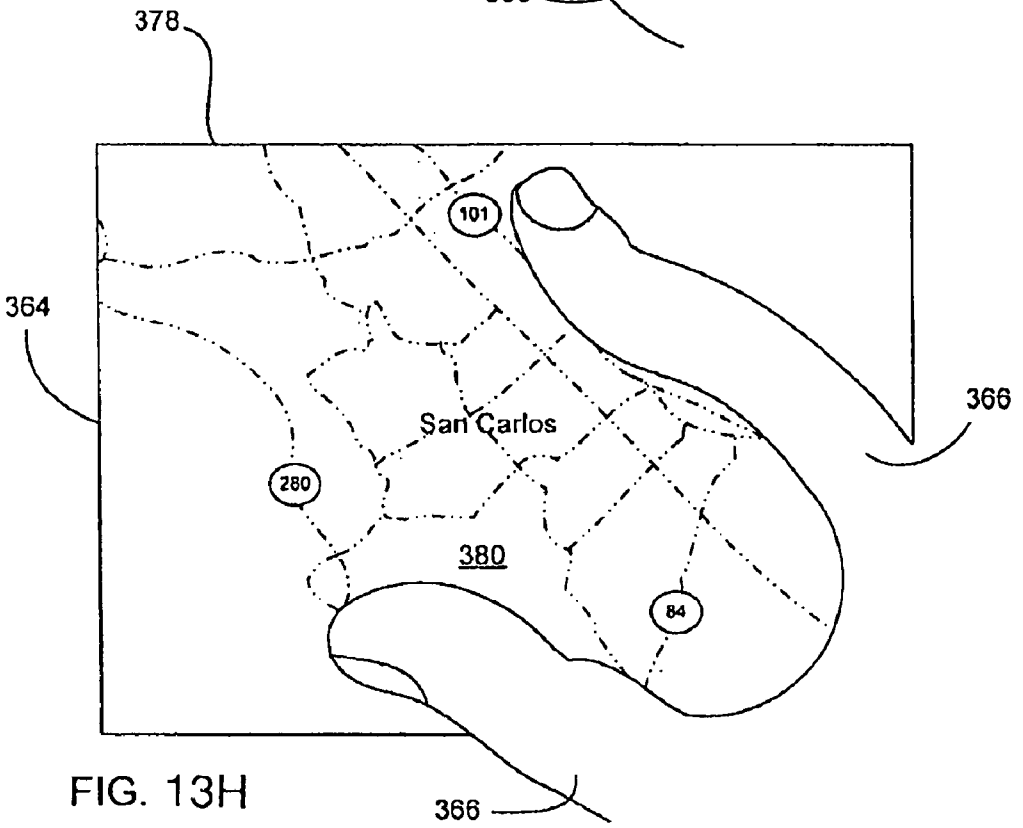

FIG. 13H

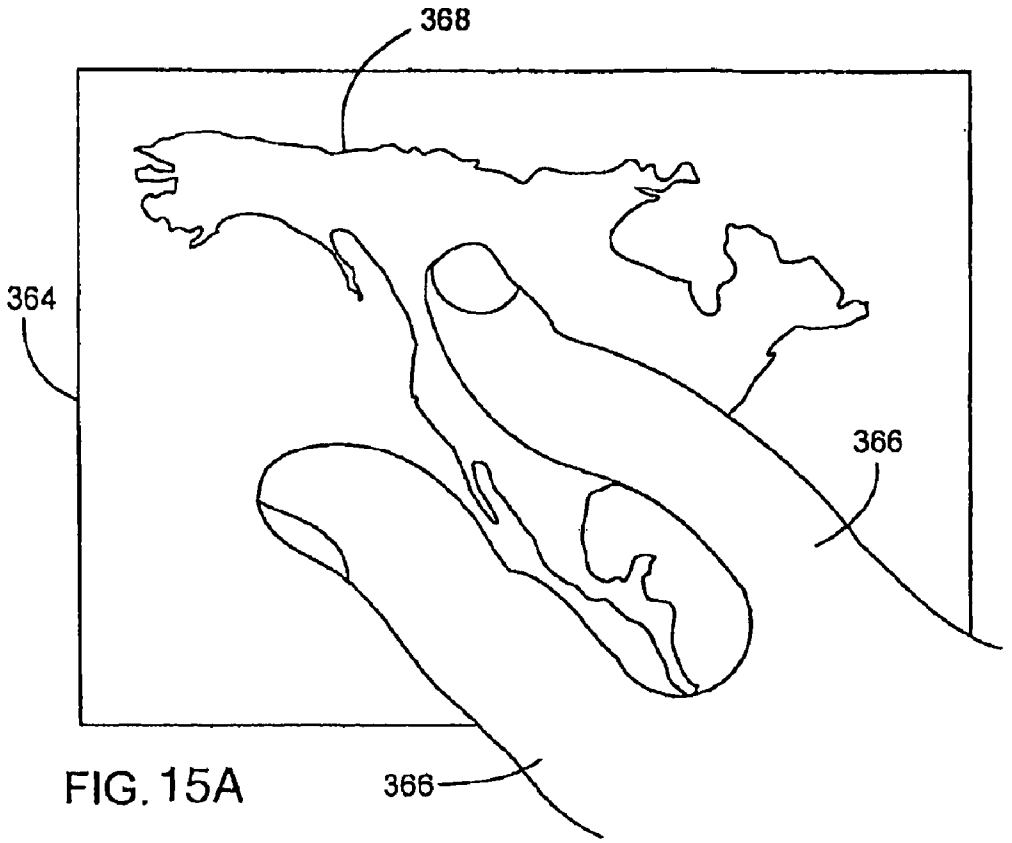

FIG. 15A

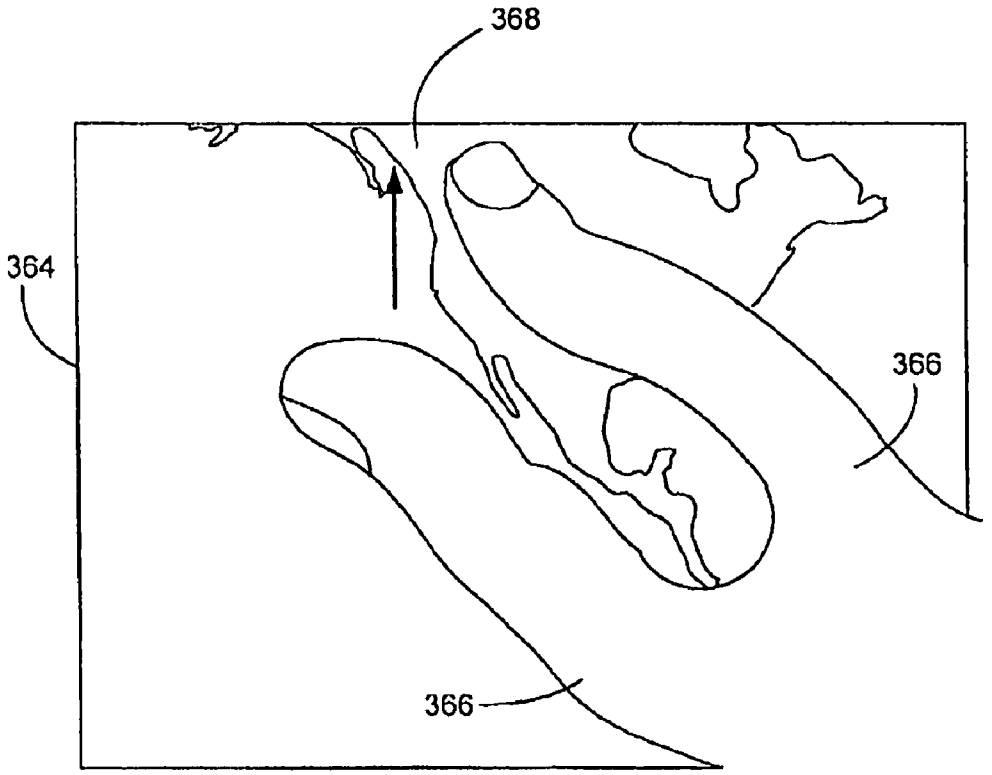

FIG. 15 B

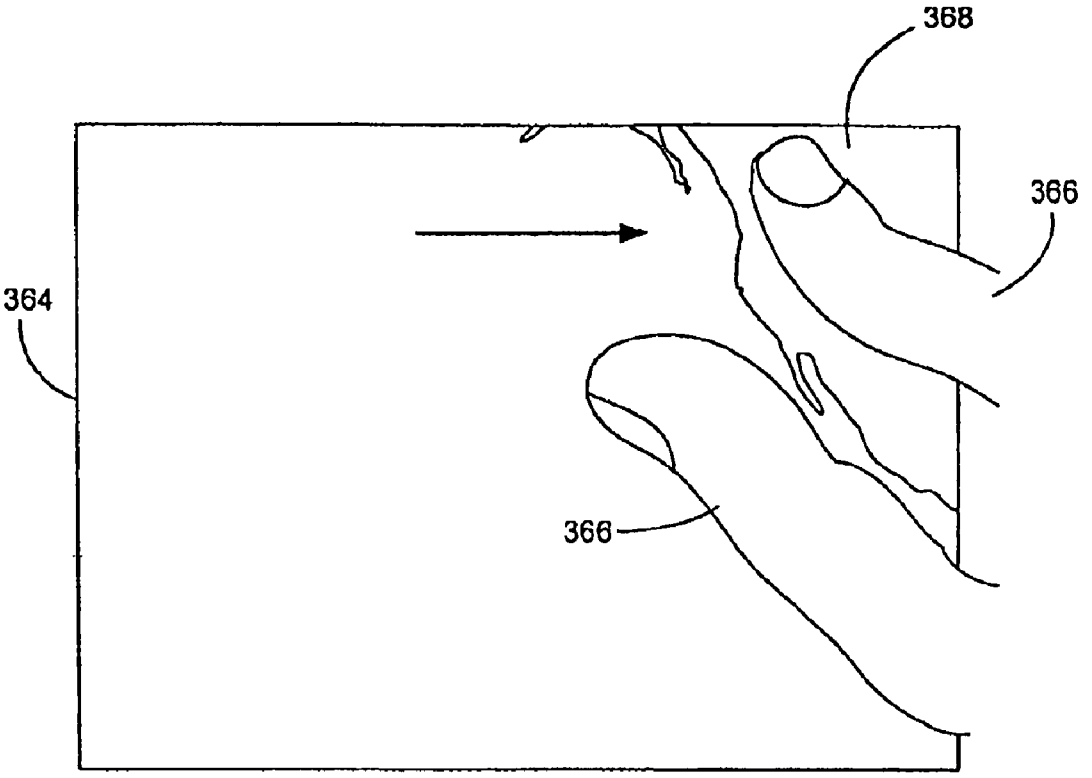

FIG. 15C

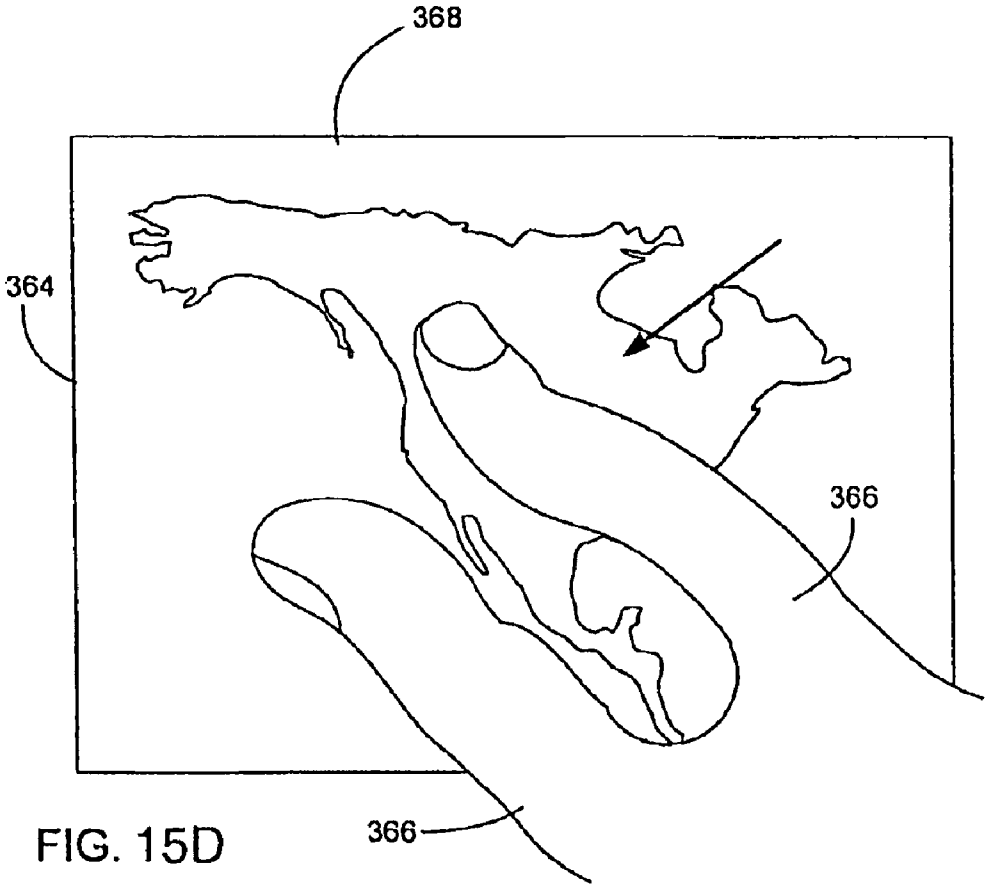

FIG. 15D

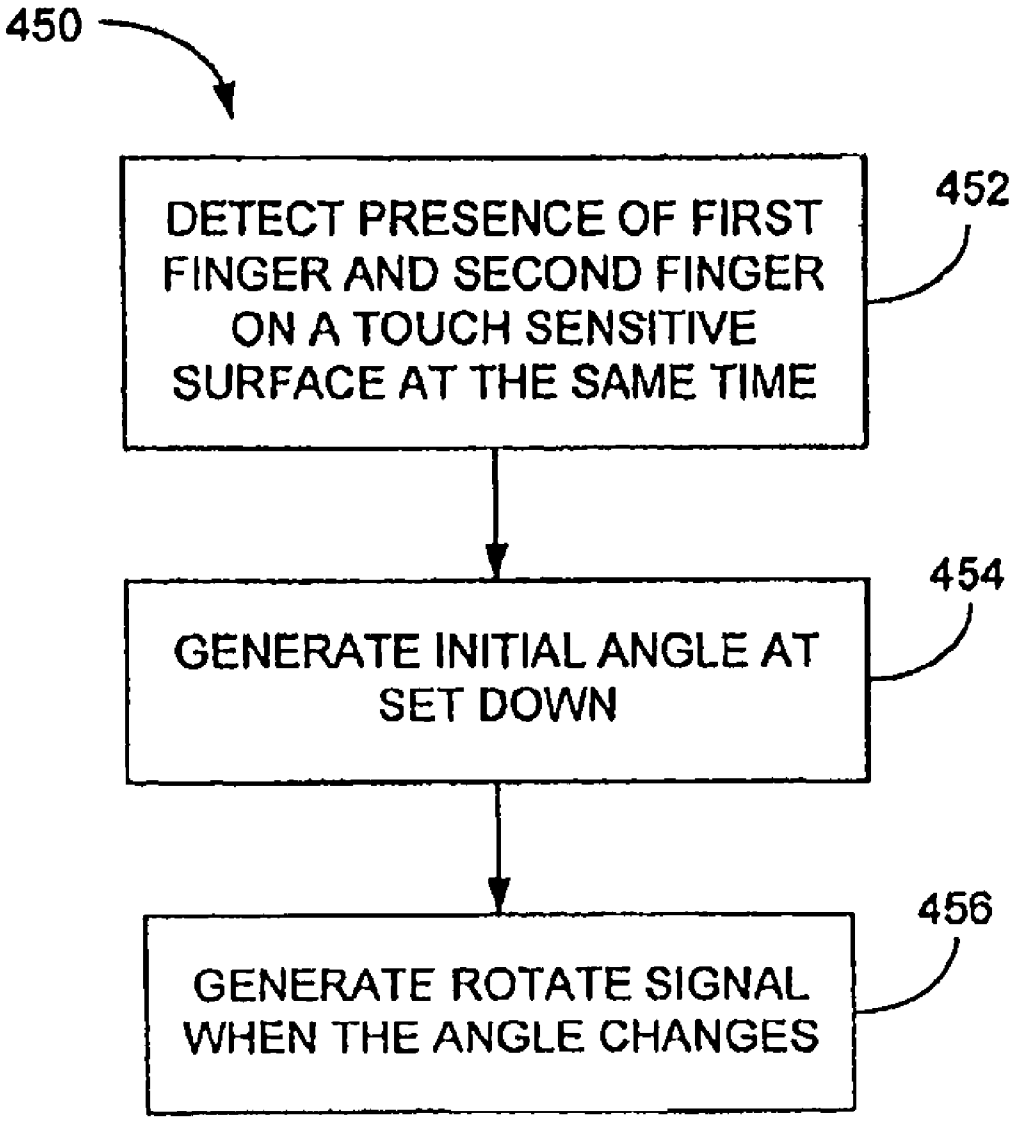
450
DETECT PRESENCE OF FIRST FINGER AND SECOND FINGER ON A TOUCH SENSITIVE SURFACE AT THE SAME TIME
452
GENERATE INITIAL ANGLE AT SET DOWN
454
GENERATE ROTATE SIGNAL WHEN THE ANGLE CHANGES
456

FIG. 16

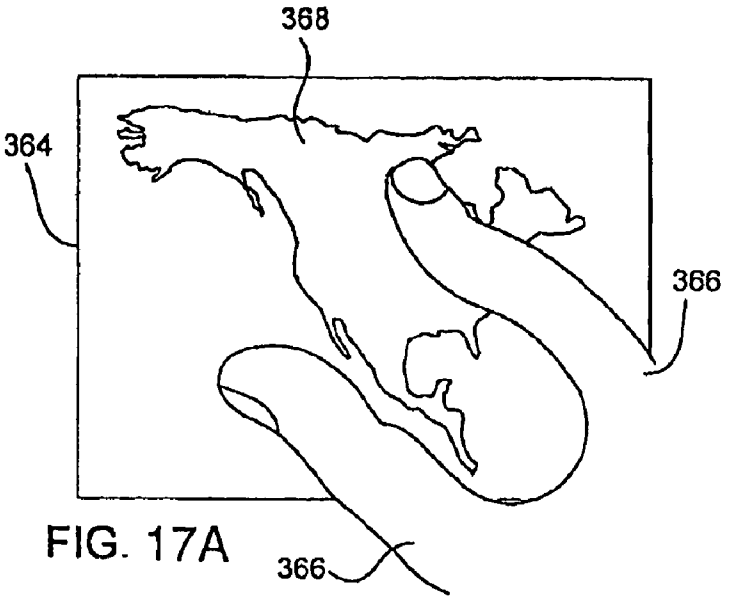

FIG. 17A

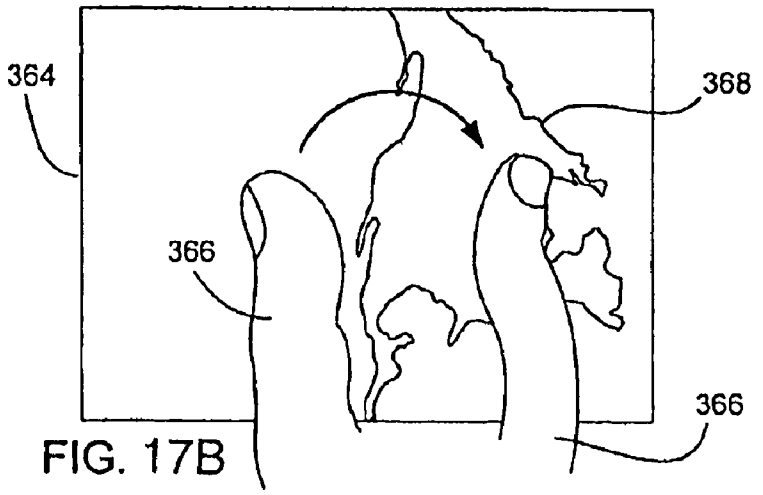

FIG. 17B

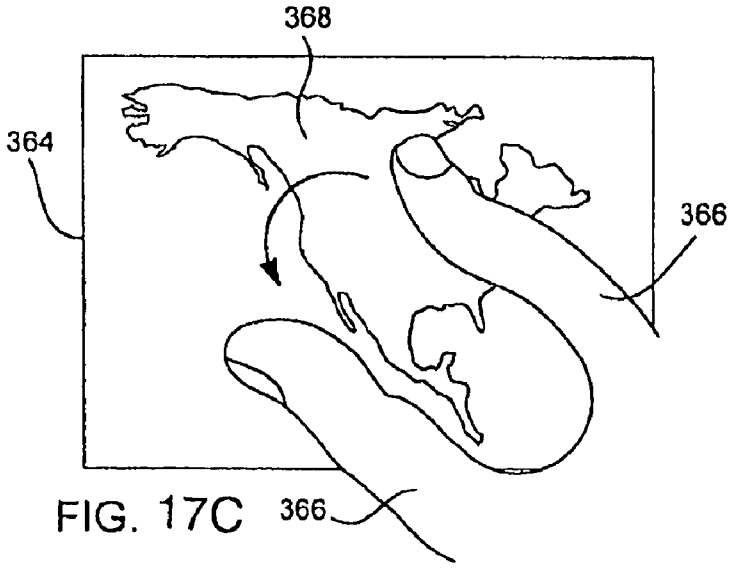

FIG. 17C

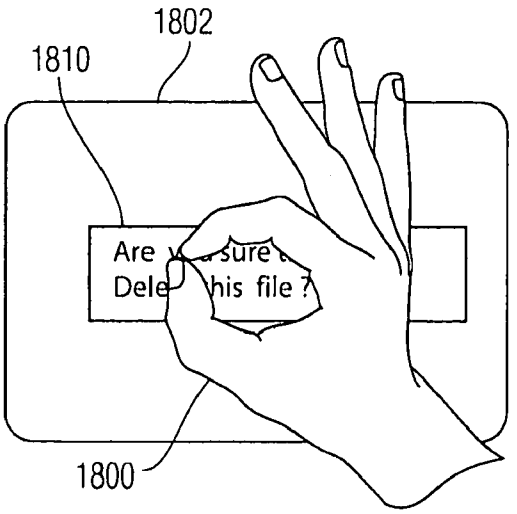

Fig. 18a

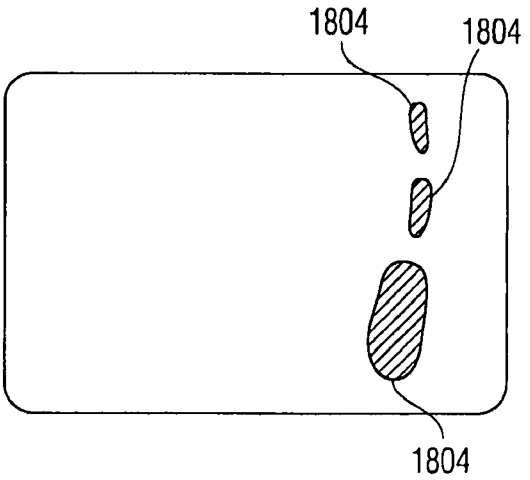

Fig. 18b

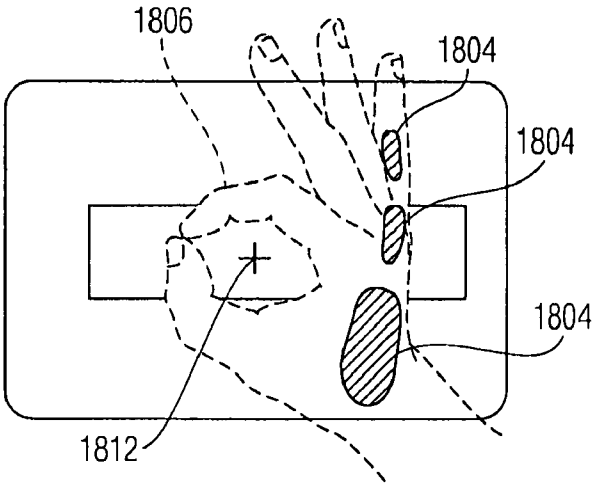

Fig. 18c

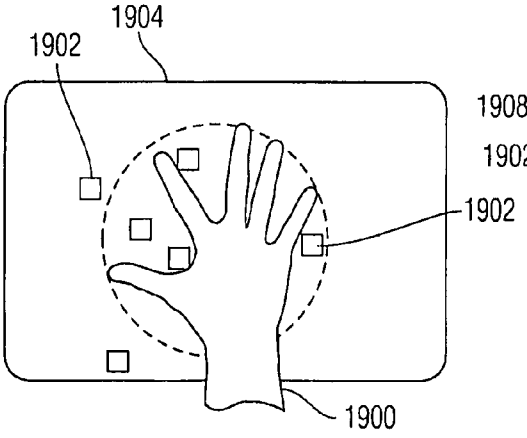

Fig. 19a

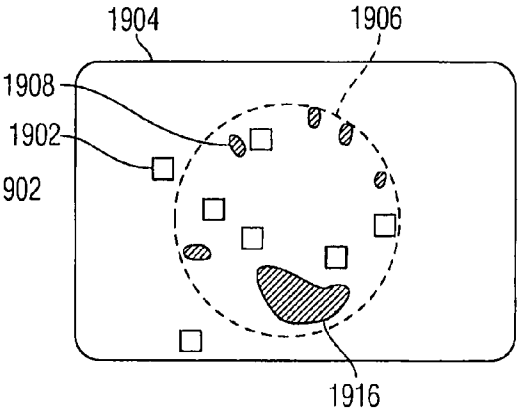

Fig. 19b

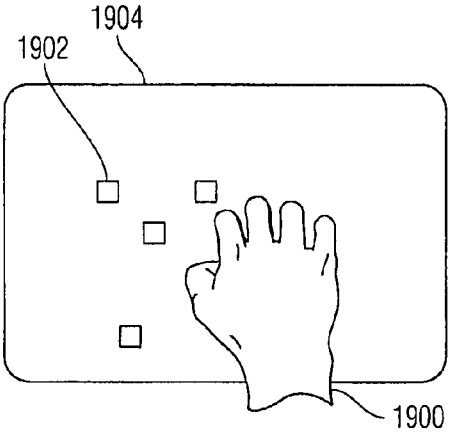

Fig. 19c

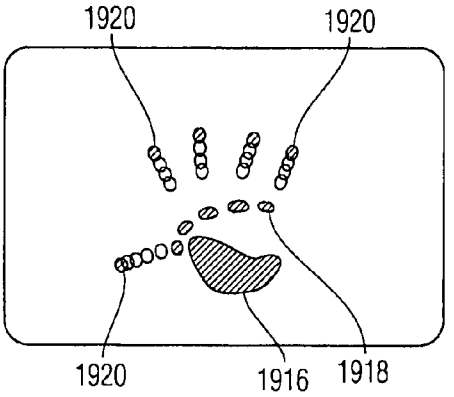

Fig. 19d

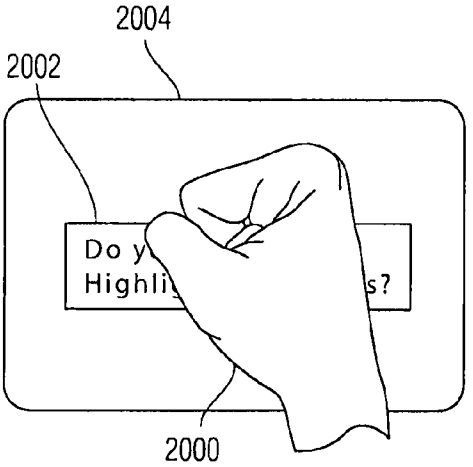

Fig. 20a

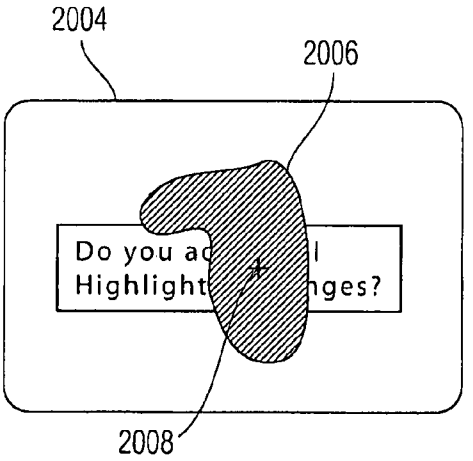

Fig. 20b

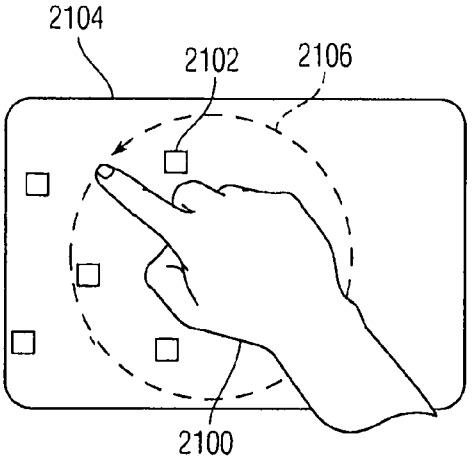

Fig. 21a

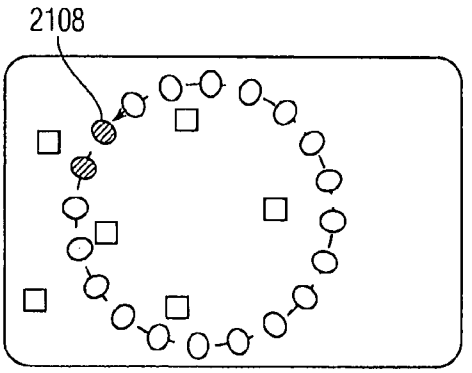

Fig. 21b

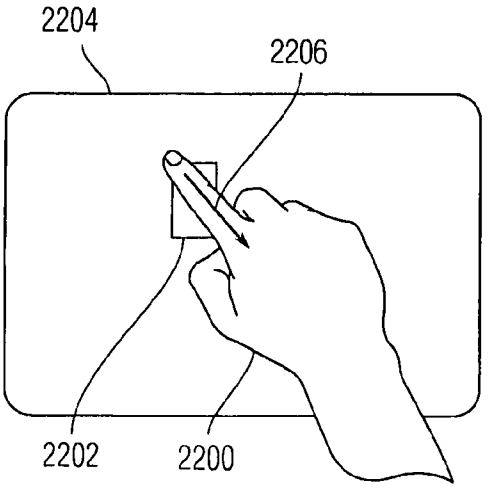

Fig. 22a

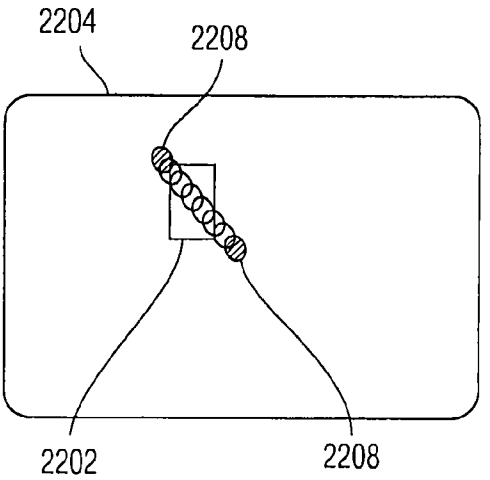

Fig. 22b

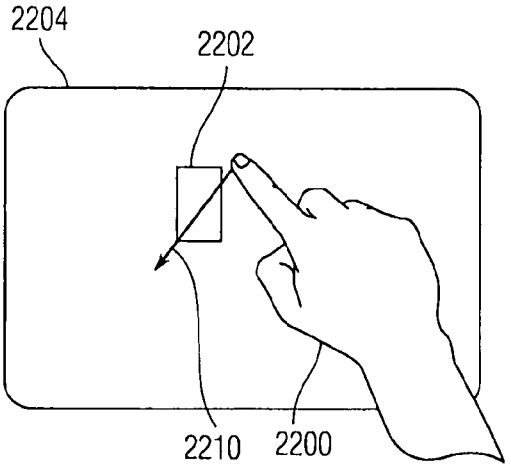

Fig. 22c

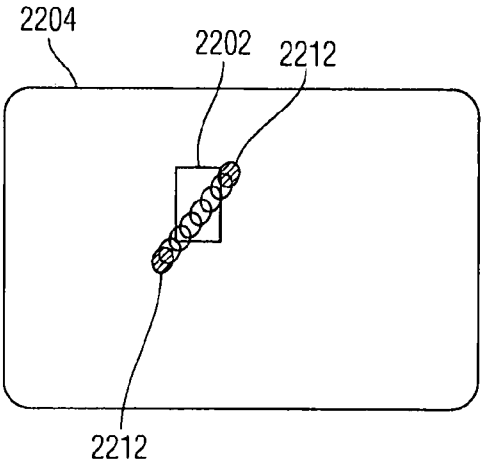

Fig. 22d

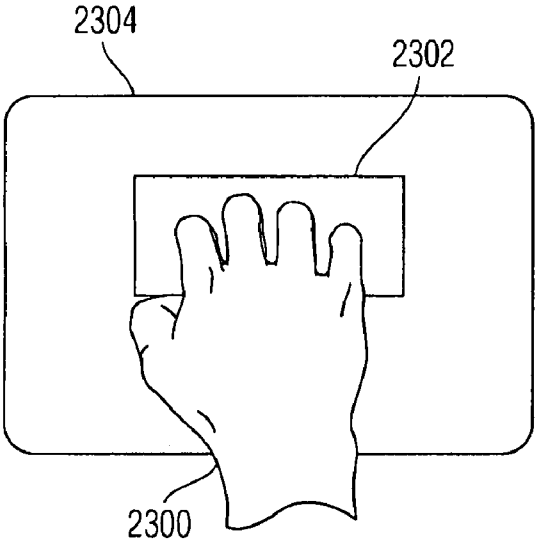

Fig. 23a

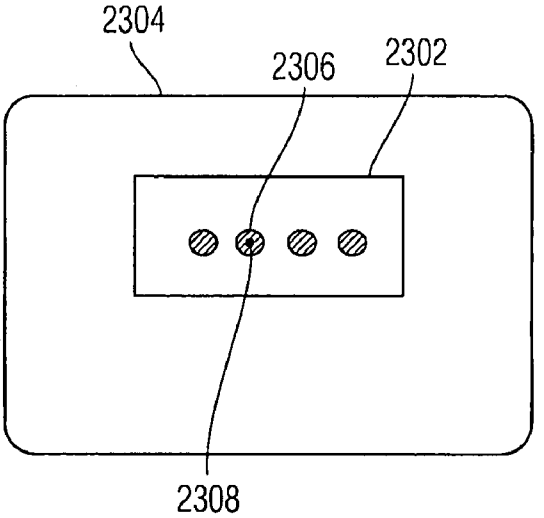

Fig. 23b

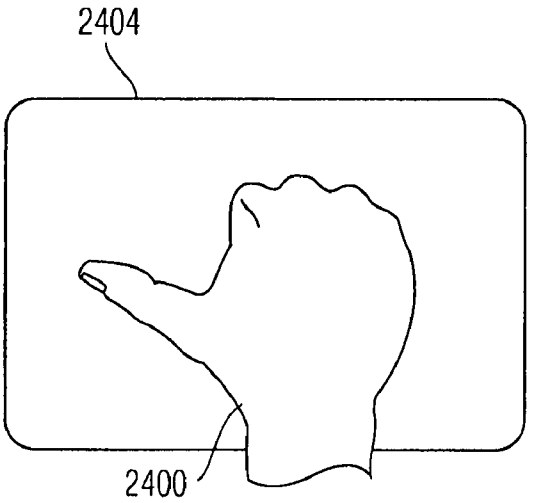

Fig. 24a

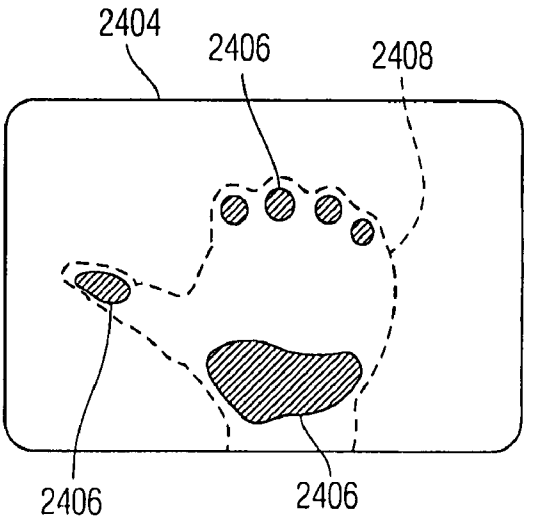

Fig. 24b

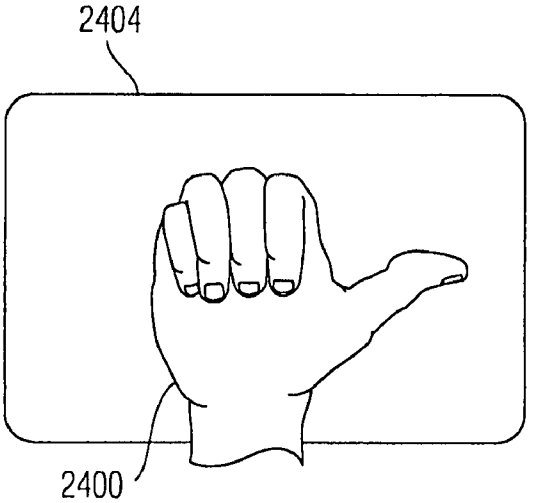

Fig. 24c

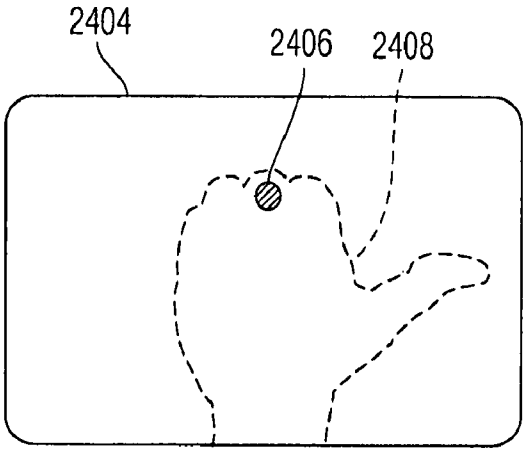

Fig. 24d

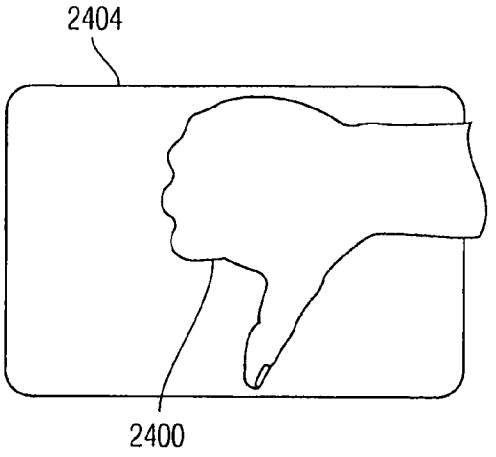

Fig. 24e

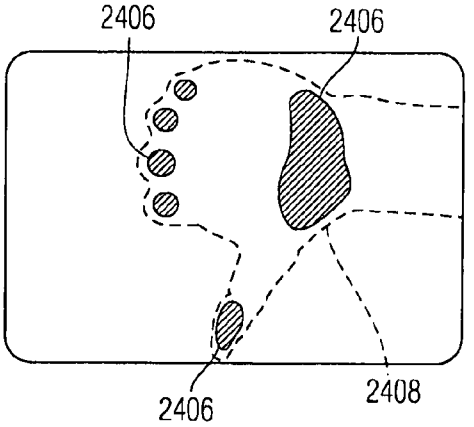

Fig. 24f

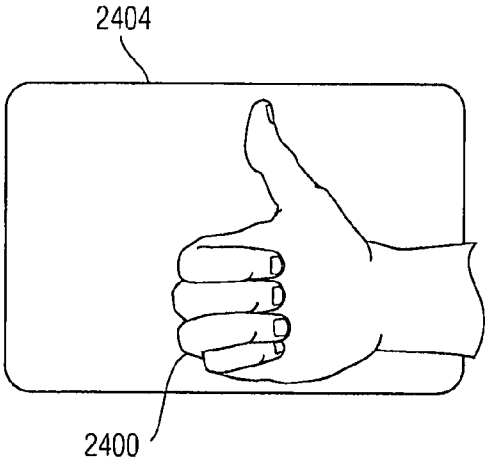

Fig. 24g

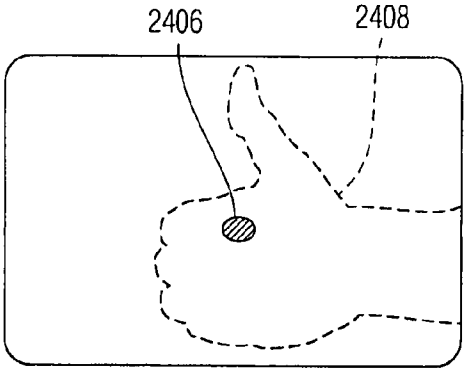

Fig. 24h

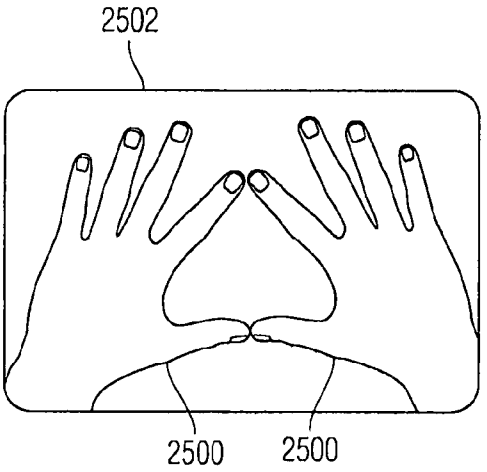

Fig. 25a

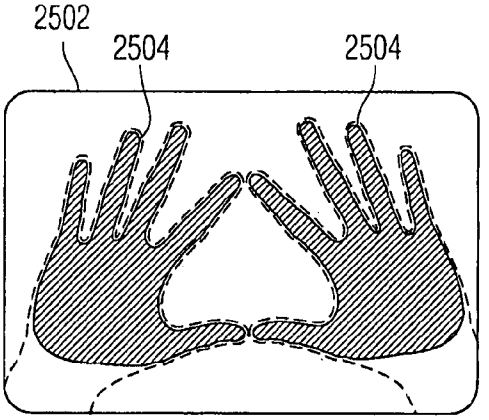

Fig. 25b

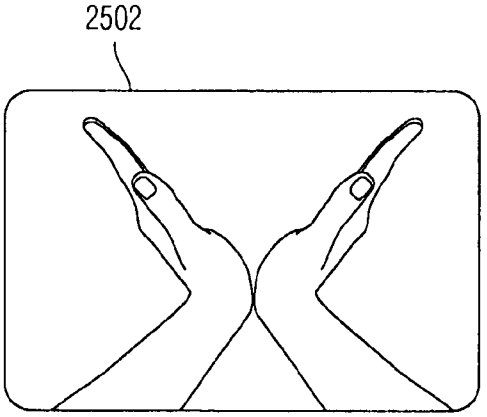

Fig. 25c

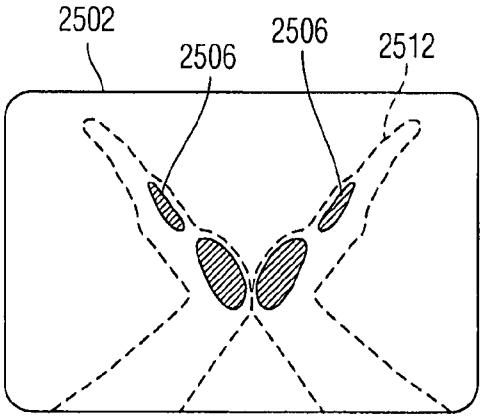

Fig. 25d

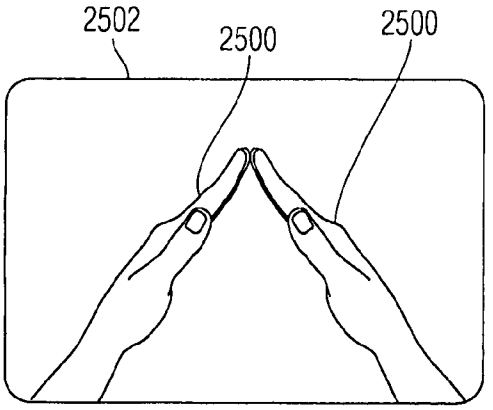

Fig. 25e

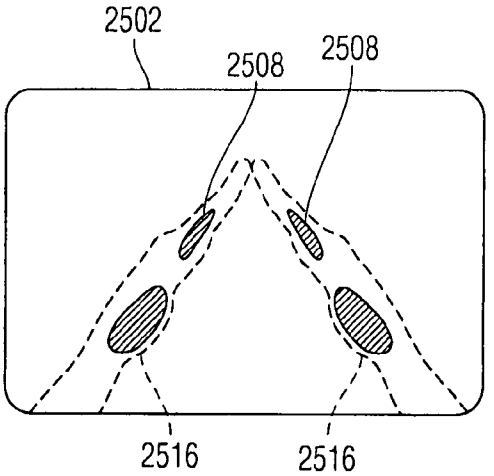

Fig. 25f

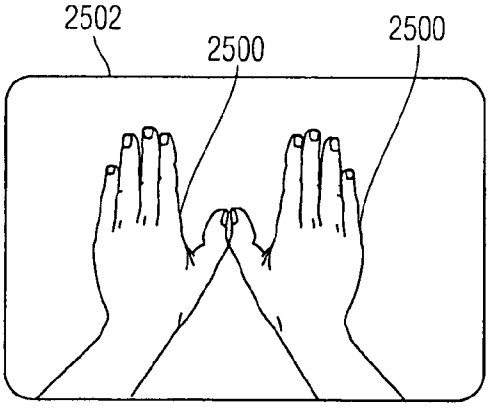

Fig. 25g

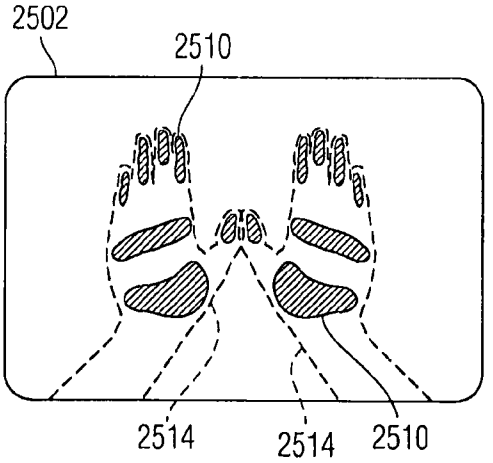

Fig. 25h

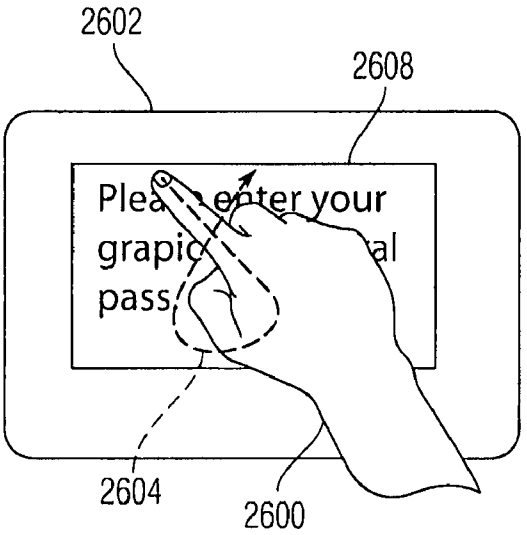

Fig. 26a

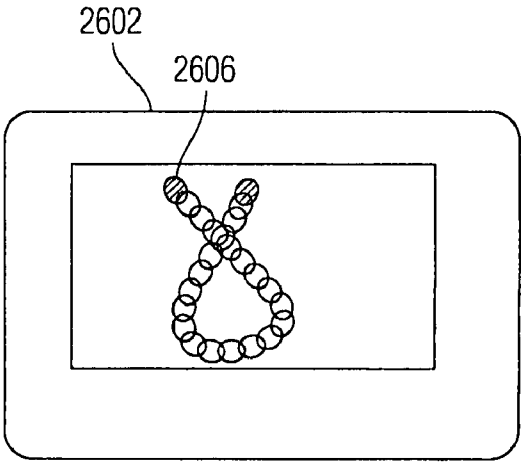

Fig. 26b

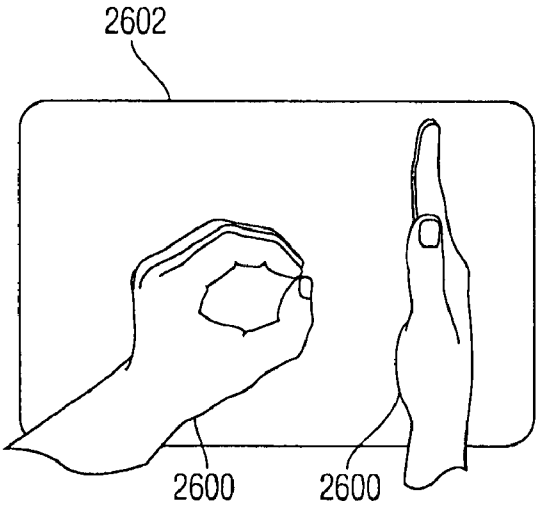

Fig. 26c

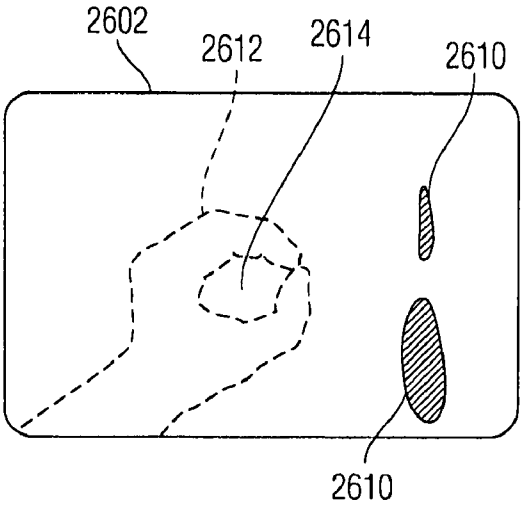

Fig. 26d

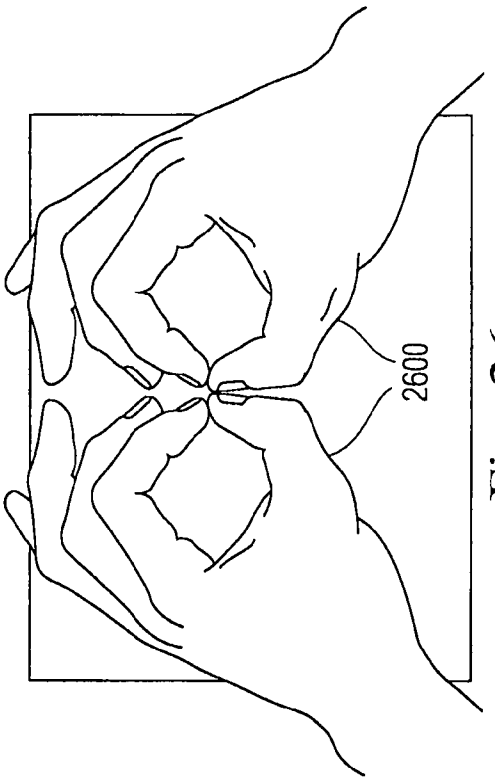

Fig. 26e

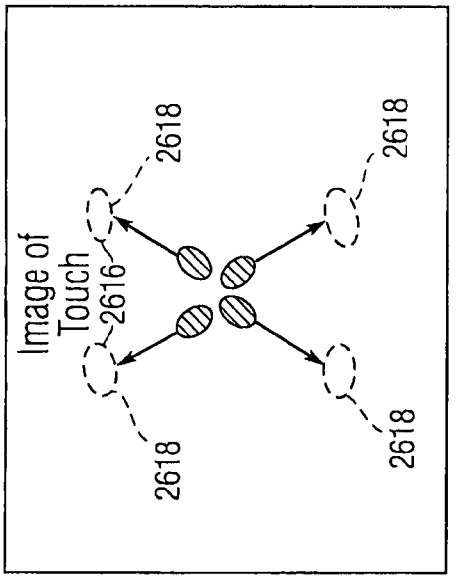

Fig. 26f

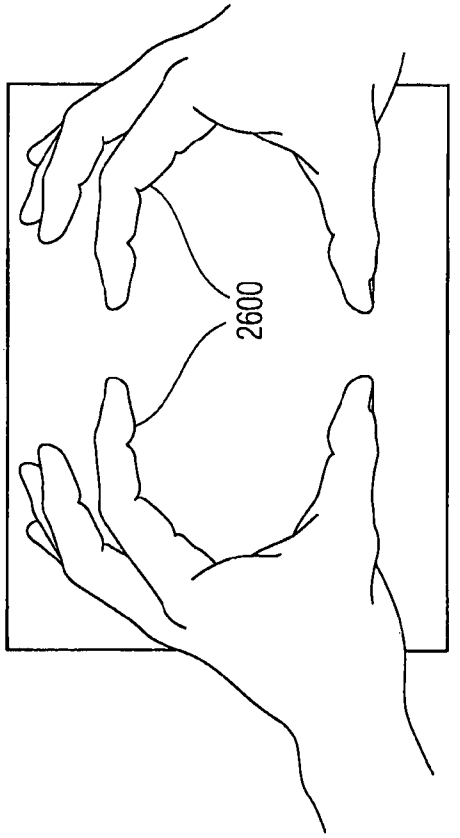

Fig. 26g

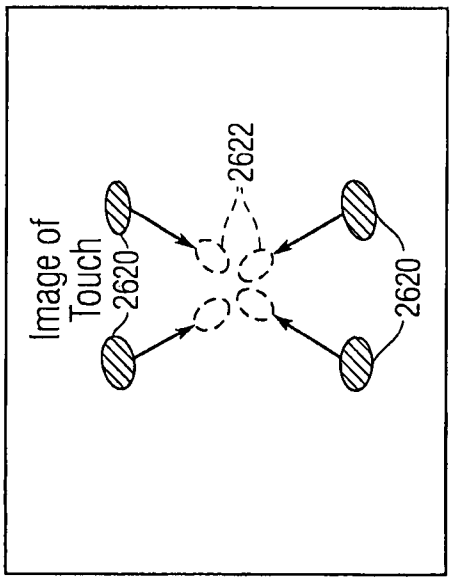

Fig. 26h

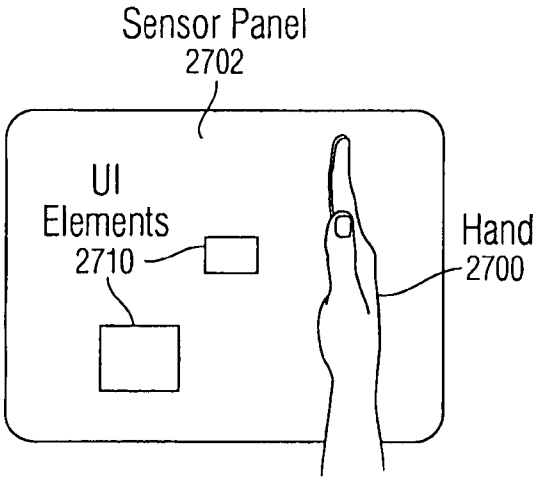

Fig. 27a

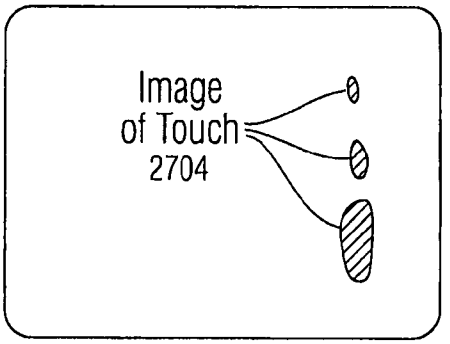

Fig. 27b

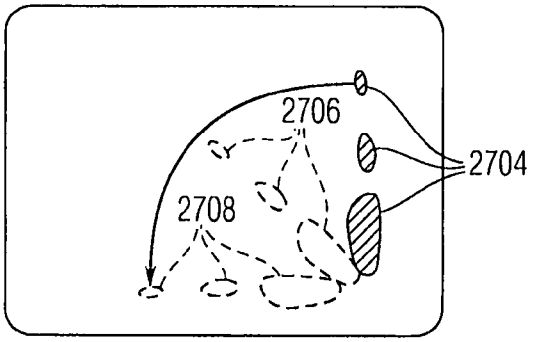

Fig. 27c

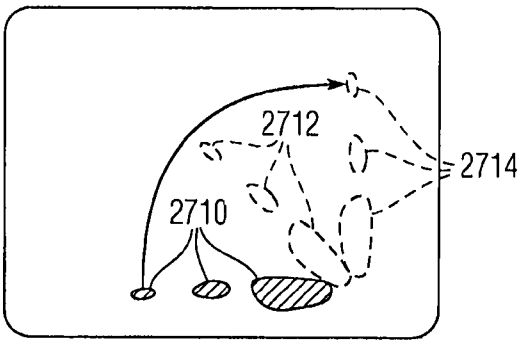

Fig. 27d

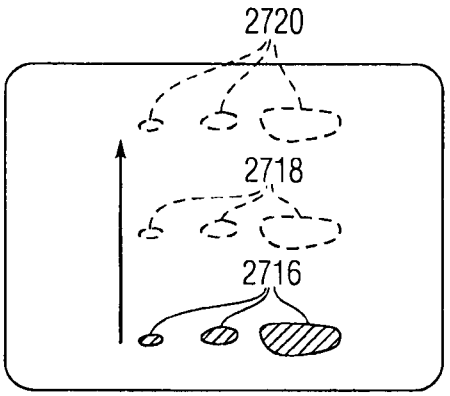

Fig. 27e

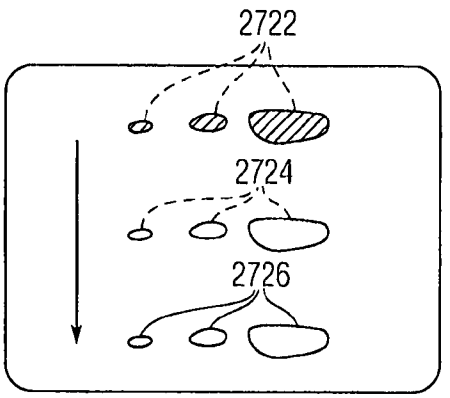

Fig. 27f

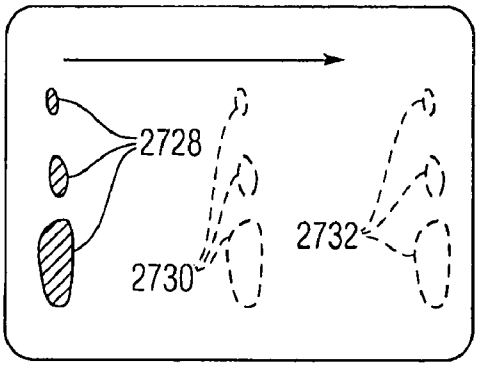

Fig. 27g

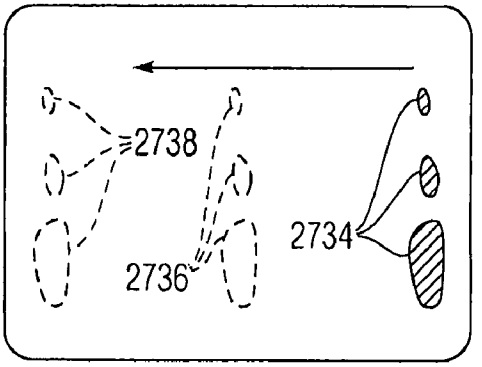

Fig. 27h

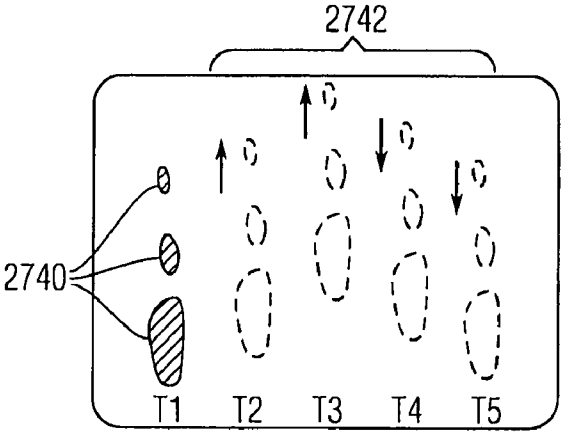

Fig. 27i

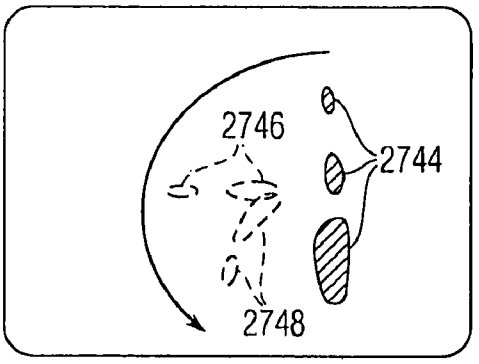

Fig. 27j

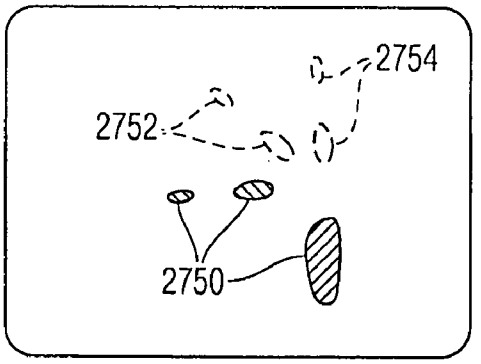

Fig. 27k

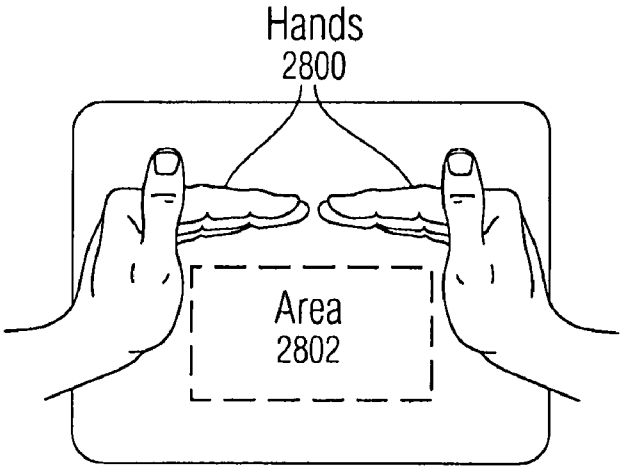

Fig. 28a

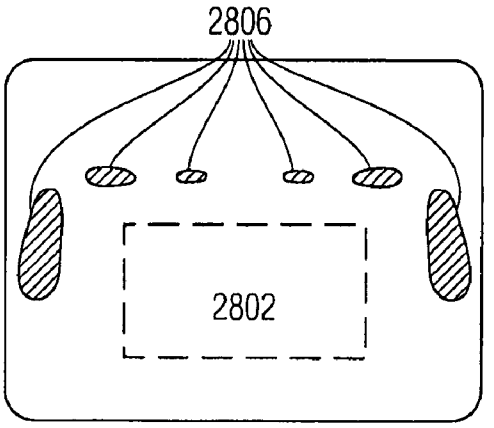

Fig. 28b

DETECTING AND INTERPRETING REAL-WORLD AND SECURITY GESTURES ON TOUCH AND HOVER SENSITIVE DEVICES

CROSS REFERENCE TO RELATED APPLICATION

The present invention claims the benefit under 35 USC 119(e) of U.S. provisional patent application Ser. No. 60/879,191 filed Jan. 6, 2007, the contents of which are incorporated by reference herein.

FIELD OF THE INVENTION

This relates to the detection and interpretation of gestures by touch and hover sensitive devices, and more particularly, to the detection and interpretation of real-world gestures and security-related gestures by touch and hover sensitive devices.

BACKGROUND OF THE INVENTION

There exist today many styles of input devices for performing operations in a computer system. The operations generally correspond to moving a cursor and making selections on a display screen. The operations can also include paging, scrolling, panning, zooming, etc. By way of example, the input devices can include buttons, switches, keyboards, mice, trackballs, touch pads, joy sticks, touch screens and the like. Each of these devices can have advantages and disadvantages that can be taken into account when designing a computer system.

Buttons and switches can be mechanical in nature and provide limited control with regards to the movement of the cursor and making selections. For example, they can be dedicated to moving the cursor in a specific direction (e.g., arrow keys) or to making specific selections (e.g., enter, delete, number, etc.).

In using a mouse instrument, the movement of the input pointer on a display can correspond to the relative movements of the mouse as the user moves the mouse along a surface. In using a trackball instrument, the movement of the input pointer on the display can correspond to the relative movements of a trackball as the user moves the ball within a housing. Mouse and trackball instruments can typically also include one or more buttons for making selections. A mouse instrument can also include scroll wheels that can allow a user to scroll the displayed content by rolling the wheel forward or backward.

With touch pad instrument, such as touch pads on a personal laptop computer, the movement of the input pointer on a display can correspond to the relative movements of the user's finger (or stylus) as the finger is moved along a surface of the touch pad. Touch screens, on the other hand, are a type of display screen that typically can include a touch-sensitive transparent panel (or "skin") that can overlay the display screen. When using a touch screen, a user typically makes a selection on the display screen by pointing directly to objects (such as GUI objects) displayed on the screen (usually with a stylus or finger).

To provide additionally functionality, hand gestures have been implemented with some of these input devices. By way of example, in touch pads, selections can be made when one or more taps can be detected on the surface of the touch pad. In some cases, any portion of the touch pad can be tapped, and in other cases a dedicated portion of the touch pad can be tapped. In addition to selections, scrolling can be initiated by using finger motion at the edge of the touch pad.

U.S. Pat. Nos. 5,612,719 and 5,590,219, assigned to Apple Computer, Inc. describe some other uses of gesturing. U.S. Pat. No. 5,612,719 discloses an onscreen button that can be responsive to at least two different button gestures made on the screen on or near the button. U.S. Pat. No. 5,590,219 discloses a method for recognizing an ellipse-type gesture input on a display screen of a computer system.

In recent times, more advanced gestures have been implemented. For example, scrolling can be initiated by placing four fingers on the touch pad so that the scrolling gesture is recognized, and thereafter moving these fingers on the touch pad to perform scrolling events. The methods for implementing these advanced gestures, however, can be limited and in many instances counterintuitive. In certain applications, it can be beneficial to enable a user to use "real-world" gestures such as hand movements and/or finger orientations that can be generally recognized to mean certain things, such as an "OK" signal, to more efficiently and accurately effect intended operations.

SUMMARY OF THE INVENTION

Embodiments of the present invention are directed to the detection of "real-world" gestures that can be generally recognized to mean certain things by a touch or hover sensitive device to more efficiently and accurately effect intended operations in computing systems. These gestures can include, but are not limited to, "OK gestures," "grasp everything gestures," "stamp of approval gestures," "circle select gestures," "X to delete gestures," "knock to inquire gestures," "hitchhiker directional gestures," and "shape gestures." In addition, gestures can be used to provide identification and allow or deny access to applications, files, and the like.

An "OK gesture" can be detected and interpreted to perform operations that can require an affirmative response, such as a text box UI element that asks the user whether a certain action is to be taken. A "grasp everything gesture" can be detected and interpreted to perform operations that can require a grouping action, such as the grouping of UI elements such as file icons or graphics symbols on a desktop or drawing page. A "stamp of approval gesture" can be detected and interpreted to perform operations that can require an affirmative response, such as a UI element including text that asks the user whether a certain action is to be taken. A "circle select gesture" can be detected and interpreted to perform operations that can require a grouping action, such as the grouping of UI elements such as file icons or graphics symbols on a desktop or drawing page. An "X to delete gesture" can be detected and interpreted to perform operations that can require a deleting action, such as the deleting of a UI element such as file icon or graphics symbol on a desktop or drawing page. A "knock to inquire gesture" can be detected and interpreted to perform operations that can require an inquiry action, such as determining whether an application, file, person of interest or other entity is available to be opened, accessed, communicated with, and the like. A "hitchhiker gesture" can be detected and interpreted to perform operations that can require a directional input, such as a scrolling, panning, windowing, translating in time, and the like. Shape gestures can be detected and interpreted to perform various operations, including creating a graphic image of that shape, or selecting or moving UI elements. An "identification gesture" formed by either or both hands on or over a touch or hover sensitive device can be detected and interpreted to perform operations that can require an identification action,

such determining whether the user is to get access, or continue to have access, to a restricted account, file or other item.

BRIEF DESCRIPTION OF THE DRAWINGS

FIG. **1** is a block diagram of an exemplary computer system according to one embodiment of this invention.

FIG. **2** illustrates another exemplary computer system according to one embodiment of this invention.

FIG. **3** is an exemplary multipoint processing method according to one embodiment of this invention.

FIGS. **4***a* and **4***b* illustrate a detected touch image according to one embodiment of this invention.

FIG. **5** illustrates a group of features according to one embodiment of this invention.

FIG. **6** is a parameter calculation method according to one embodiment of this invention.

FIGS. **7***a*-**7***e* and **7***i*-**7***k* illustrate various gestures for performing targeting and/or selecting tasks according to one embodiment of this invention.

FIGS. **7***f*-**7***h* show a diagram of a method for recognizing and implementing gestural inputs of FIGS. **7***a*-**7***e*.

FIGS. **8***a*-**8***g* illustrate a rotate gesture according to one embodiment of this invention.

FIG. **9** is a diagram of a touch-based method according to one embodiment of this invention.

FIG. **10** is a diagram of a touch-based method according to one embodiment of this invention.

FIG. **11** is a diagram of a touch-based method according to one embodiment of this invention.

FIG. **12** is a diagram of a zoom gesture method according to one embodiment of this invention.

FIGS. **13***a*-**13***h* illustrates a zooming sequence according to one embodiment of this invention.

FIG. **14** is a diagram of a pan method according to one embodiment of this invention.

FIGS. **15***a*-**15***d* illustrate a panning sequence according to one embodiment of this invention.

FIG. **16** is a diagram of a rotate method according to one embodiment of this invention.

FIGS. **17***a*-**17***c* illustrate a rotating sequence according to one embodiment of this invention.

FIGS. **18***a*-**18***c* illustrate an exemplary "OK gesture" according to one embodiment of this invention.

FIGS. **19***a*-**19***d* illustrate an exemplary "grasp everything gesture" according to one embodiment of this invention.

FIGS. **20***a*-**20***b* illustrate an exemplary "stamp of approval gesture" according to one embodiment of this invention.

FIGS. **21***a*-**21***b* illustrate an exemplary "circle select gesture" according to one embodiment of this invention.

FIGS. **22***a*-**22***d* illustrate an exemplary "X to delete gesture" according to one embodiment of this invention.

FIGS. **23***a*-**23***b* illustrate an exemplary "knock to inquire gesture" according to one embodiment of this invention.

FIGS. **24***a*-**24***h* illustrate an exemplary "hitchhiker gesture" according to one embodiment of this invention.

FIGS. **25***a*-**25***h* illustrate exemplary "shape gestures" according to one embodiment of this invention.

FIGS. **26***a*-**26***h* illustrate exemplary "identification gestures" and "lock/unlock gestures" according to one embodiment of this invention.

FIGS. **27***a*-**27***k* illustrate exemplary "hand edge gestures" according to one embodiment of this invention.

FIGS. **28***a*-**28***b* illustrate an exemplary "framing gesture" according to one embodiment of this invention.

DETAILED DESCRIPTION OF THE PREFERRED EMBODIMENT

In the following description of preferred embodiments, reference is made to the accompanying drawings which form a part hereof, and in which it is shown by way of illustration specific embodiments in which the invention can be practiced. It is to be understood that other embodiments can be utilized and structural changes can be made without departing from the scope of the preferred embodiments of the present invention.

"Real-world" gestures such as hand or finger movements/orientations that are generally recognized to mean certain things (e.g., an "OK" hand signal generally indicates an affirmative response) can be interpreted by a touch or hover sensitive device to more efficiently and accurately effect intended operations. These gestures can include, but are not limited to, "OK gestures," "grasp everything gestures," "stamp of approval gestures," "circle select gestures," "X to delete gestures," "knock to inquire gestures," "hitchhiker directional gestures," and "shape gestures." In addition, gestures can be used to provide identification and allow or deny access to applications, files, and the like.

Although some embodiments of the invention can be described herein in terms of capacitive multi-touch sensor panels, embodiments of the invention can be generally applicable to other types of multi-touch sensors that can include resistive touch sensors, surface acoustic wave touch sensors, electromagnetic touch sensors, near field imaging touch sensors, optical touch sensors and the like. In addition, although the proximity sensors can be described herein as infrared (IR) proximity sensors, embodiments of the invention can be generally applicable to other types of proximity sensors having an output that can be AC-coupled to an analog channel.

FIG. **1** is a block diagram of exemplary computer system **50** in accordance with embodiments of this invention. Computer system **50** can correspond to a personal computer system, such as a desktop, laptop, tablet or handheld computer. The computer system can also correspond to a computing device, such as a mobile telephone, PDA, dedicated media player, consumer electronics device, and the like.

The exemplary computer system **50** shown in FIG. **1** can include a processor **56** configured to execute instructions and to carry out operations associated with the computer system **50**. For example, using instructions retrieved, for example, from memory, the processor **56** can control the reception and manipulation of input and output data between components of the computing system **50**. The processor **56** can be implemented on a single-chip, multiple chips or multiple electrical components. For example, various architectures can be used for the processor **56**, including dedicated or embedded processors, single purpose processors, controllers, ASICs, and so forth.

In most cases, the processor **56** together with an operating system can operate to execute computer code and produce and use data. Operating systems are generally well known and will not be described in greater detail. By way of example, the operating system can correspond to OS/2, DOS, Unix, Linux, Palm OS, and the like. The operating system can also be a special purpose operating system, such as can be used for limited purpose appliance-type computing devices. The operating system, other computer code and data can reside within a memory block **58** that can be operatively coupled to the processor **56**. Memory block **58** can generally

provide a place to store computer code and data that can be used by the computer system **50**. By way of example, the memory block **58** can include Read-Only Memory (ROM), Random-Access Memory (RAM), hard disk drive and/or the like. The information could also reside on a removable storage medium and can be loaded or installed onto the computer system **50** when needed. Removable storage mediums can include, for example, CD-ROM, PC-CARD, memory card, floppy disk, magnetic tape, and a network component.

The computer system **50** can also include a display device **68** that can be operatively coupled to the processor **56**. The display device **68** can be a liquid crystal display (LCD) (e.g., active matrix, passive matrix and the like). Alternatively, the display device **68** can be a monitor such as a monochrome display, color graphics adapter (CGA) display, enhanced graphics adapter (EGA) display, variable-graphics-array (VGA) display, super VGA display, cathode ray tube (CRT), and the like. The display device can also correspond to a plasma display or a display implemented with electronic inks.

The display device **68** can be configured to display a graphical user interface (GUI) **69** that can provide an easy to use interface between a user of the computer system and the operating system or application running thereon. Generally speaking, the GUI **69** can represent programs, files and operational options with graphical images, objects, or vector representations. The graphical images can include windows, fields, dialog boxes, menus, icons, buttons, cursors, scroll bars, etc. Such images can be arranged in predefined layouts, or can be created dynamically to serve the specific actions being taken by a user. During operation, the user can select and/or activate various graphical images in order to initiate functions and tasks associated therewith. By way of example, a user can select a button that opens, closes, minimizes, or maximizes a window, or an icon that launches a particular program. The GUI **69** can additionally or alternatively display information, such as non interactive text and graphics, for the user on the display device **68**.

The computer system **50** can also include an input device **70** that can be operatively coupled to the processor **56**. The input device **70** can be configured to transfer data from the outside world into the computer system **50**. The input device **70** can, for example, be used to perform tracking and to make selections with respect to the GUI **69** on the display **68**. The input device **70** can also be used to issue commands in the computer system **50**. The input device **70** can include a touch-sensing device configured to receive input from a user's touch and to send this information to the processor **56**. By way of example, the touch-sensing device can correspond to a touchpad or a touch screen. In many cases, the touch-sensing device can recognize touches, as well as the position and magnitude of touches on a touch sensitive surface. The touch sensing device can detect and report the touches to the processor **56** and the processor **56** can interpret the touches in accordance with its programming. For example, the processor **56** can initiate a task in accordance with a particular touch. A dedicated processor can be used to process touches locally and reduce demand for the main processor of the computer system.

The touch sensing device can be based on sensing technologies including but not limited to capacitive sensing, resistive sensing, surface acoustic wave sensing, pressure sensing, optical sensing, and/or the like. Furthermore, the touch sensing means can be based on single point sensing or multipoint sensing. Single point sensing can be capable of only distinguishing a single touch, while multipoint sensing can be capable of distinguishing multiple touches that occur at the same time.

As discussed above, the input device **70** can be a touch screen that is positioned over or in front of the display **68**, integrated with the display device **68**, or can be a separate component, such as a touch pad.

The computer system **50** can also include capabilities for coupling to one or more I/O devices **80**. By way of example, the I/O devices **80** can correspond to keyboards, printers, scanners, cameras, microphones, speakers, and/or the like. The I/O devices **80** can be integrated with the computer system **50** or they can be separate components (e.g., peripheral devices). In some cases, the I/O devices **80** can be connected to the computer system **50** through wired connections (e.g., cables/ports). In other cases, the I/O devices **80** can be connected to the computer system **80** through wireless connections. By way of example, the data link can correspond to PS/2, USB, IR, Firewire, RF, Bluetooth or the like.

In accordance with one embodiment of the present invention, the computer system **50** can be designed to recognize gestures **85** applied to the input device **70** and to control aspects of the computer system **50** based on the gestures **85**. In some cases, a gesture can be defined as a stylized interaction with an input device that can be mapped to one or more specific computing operations. The gestures **85** can be made through various hand and finger motions. Alternatively or additionally, the gestures can be made with a stylus. In all of these cases, the input device **70** can receive the gestures **85** and the processor **56** can execute instructions to carry out operations associated with the gestures **85**. In addition, the memory block **58** can include a gesture operational program **88**, which can be part of the operating system or a separate application. The gestural operation program **88** can generally include a set of instructions that can recognize the occurrence of gestures **85** and can inform one or more software agents of the gestures **85** and/or what action(s) to take in response to the gestures **85**. Additional details regarding the various gestures that can be used as input commands are discussed further below.

In one embodiment, upon a user performing one or more gestures, the input device **70** can relay gesture information to the processor **56**. Using instructions from memory **58**, and more particularly, the gestural operational program **88**, the processor **56** can interpret the gestures **85** and control different components of the computer system **50**, such as memory **58**, a display **68** and I/O devices **80**, based on the gestures **85**. The gestures **85** can be identified as commands for performing actions in applications stored in the memory **58**, modifying image objects shown on the display **68**, modifying data stored in memory **58**, and/or for performing actions in I/O devices **80**.

Again, although FIG. **1** illustrates the input device **70** and the display **68** as two separate boxes for illustration purposes, the two boxes can be realized on one device.

FIG. **2** illustrates an exemplary computing system **10** that can use a multi-touch panel **24** as an input device for gestures; the multi-touch panel **24** can at the same time be a display panel. The computing system **10** can include one or more multi-touch panel processors **12** dedicated to the multi-touch subsystem **27**. Alternatively, the multi-touch panel processor functionality can be implemented by dedicated logic, such as a state machine. Peripherals **111** can include, but are not limited to, random access memory (RAM) or other types of memory or storage, watchdog timers and the like. Multi-touch subsystem **27** can include, but is not limited to, one or more analog channels **17**, channel scan logic **18** and driver logic **19**. Channel scan logic **18** can access RAM **16**, autonomously read data from the analog channels and provide control for the analog channels. This control can include multi-

plexing columns of multi-touch panel **24** to analog channels **17**. In addition, channel scan logic **18** can control the driver logic and stimulation signals being selectively applied to rows of multi-touch panel **24**. In some embodiments, multi-touch subsystem **27**, multi-touch panel processor **12** and peripherals **11** can be integrated into a single application specific integrated circuit (ASIC).

Driver logic **19** can provide multiple multi-touch subsystem outputs **20** and can present a proprietary interface that drives high voltage driver, which can include a decoder **21** and subsequent level shifter and driver stage **22**, although level-shifting functions could be performed before decoder functions. Level shifter and driver **22** can provide level shifting from a low voltage level (e.g. CMOS levels) to a higher voltage level, providing a better signal-to-noise (S/N) ratio for noise reduction purposes. Decoder **21** can decode the drive interface signals to one or more of N outputs, where N is the maximum number of rows in the panel. Decoder **21** can be used to reduce the number of drive lines needed between the high voltage driver and multi-touch panel **24**. Each multi-touch panel row input **23** can drive one or more rows in multi-touch panel **24**. It should be noted that driver **22** and decoder **21** can also be integrated into a single ASIC, be integrated into driver logic **19**, or in some instances be unnecessary.

The multi-touch panel **24** can include a capacitive sensing medium having a plurality of row traces or driving lines and a plurality of column traces or sensing lines, although other sensing media can also be used. The row and column traces can be formed from a substantially transparent conductive medium, such as Indium Tin Oxide (ITO) or Antimony Tin Oxide (ATO), although other transparent and non-transparent materials, such as copper, can also be used. In some embodiments, the row and column traces can be formed on opposite sides of a dielectric material, and can be perpendicular to each other, although in other embodiments other non-Cartesian orientations are possible. For example, in a polar coordinate system, the sensing lines can be concentric circles and the driving lines can be radially extending lines (or vice versa). It should be understood, therefore, that the terms "row" and "column," "first dimension" and "second dimension," or "first axis" and "second axis" as used herein are intended to encompass not only orthogonal grids, but the intersecting traces of other geometric configurations having first and second dimensions (e.g. the concentric and radial lines of a polar-coordinate arrangement). The rows and columns can be formed on a single side of a substrate, or can be formed on two separate substrates separated by a dielectric material. In some instances, an additional dielectric cover layer can be placed over the row or column traces to strengthen the structure and protect the entire assembly from damage.

At the "intersections" of the traces of the multi-touch panel **24**, where the traces pass above and below (cross) each other (but do not make direct electrical contact with each other), the traces can essentially form two electrodes (although more than two traces could intersect as well). Each intersection of row and column traces can represent a capacitive sensing node and can be viewed as picture element (pixel) **26**, which can be particularly useful when multi-touch panel **24** is viewed as capturing an "image" of touch. (In other words, after multi-touch subsystem **27** has determined whether a touch event has been detected at each touch sensor in the multi-touch panel, the pattern of touch sensors in the multi-touch panel at which a touch event occurred can be viewed as an "image" of touch (e.g. a pattern of fingers touching the panel).) The capacitance between row and column electrodes can appear as a stray capacitance on all columns when the given row is held at DC and as a mutual capacitance Csig when the given row is stimulated with an AC signal. The presence of a finger or other object near or on the multi-touch panel can be detected by measuring changes to Csig. The columns of multi-touch panel **124** can drive one or more analog channels **17** (also referred to herein as event detection and demodulation circuits) in multi-touch subsystem **27**. In some implementations, each column is coupled to one dedicated analog channel **17**. However, in other implementations, the columns can be couplable via an analog switch to a fewer number of analog channels **17**.

Computing system **10** can also include host processor **14** for receiving outputs from multi-touch panel processor **12** and performing actions based on the outputs that can include, but are not limited to, moving an object such as a cursor or pointer, scrolling or panning, adjusting control settings, opening a file or document, viewing a menu, making a selection, executing instructions, operating a peripheral device connected to the host device, etc. Host processor **14**, which can be a personal computer CPU, can also perform additional functions that may not be related to multi-touch panel processing, and can be coupled to program storage **15** and display device **13** such as an LCD display for providing a user interface (UI) to a user of the device. It should also be noted that multi-touch panel **24** and display device **13** can be integrated into one single touch-screen display device.

Although capacitive touch sensor panels can detect objects hovering within the near-field of the panel, and appear to be "weak" touches, in some embodiments proximity sensor panels can be co-located with touch sensor panels to provide hover detection capabilities outside the near-field hover detection capabilities of capacitive touch sensor panels. These proximity sensor panels can be arranged as an array of proximity sensors that can be scanned in a manner similar to the scanning of a touch sensor panel to generate an "image" of hover. Further details of multi-touch sensor detection, including proximity detection by a touch panel and proximity detection by a proximity sensor panel, are described in commonly assigned co-pending applications, including U.S. patent application Ser. No. 10/840,862, published on May 11, 2006 as U.S. Publication No. US2006/0097991, and U.S. patent application entitled "Proximity and Multi-Touch Sensor Detection and Demodulation," filed on Jan. 3, 2007, the entirety of both which are incorporated herein by reference.

FIG. **3** illustrates a multipoint processing method **100**, in accordance with one embodiment of the present invention. The multipoint processing method **100** can, for example, be performed in the system shown in FIG. **1** or **2**. The multipoint processing method **100** generally begins at block **102** where images can be read from a multipoint input device, and more particularly a multipoint touch screen. Although the term "image" is used it should be noted that the data can come in other forms. In most cases, the image read from the touch screen provides magnitude (Z) as a function of position (x and y) for each sensing point or pixel of the touch screen. The magnitude can, for example, reflect the capacitance measured at each point.

Following block **102**, multipoint processing method **100** can proceed to block **104** where the image can be converted into a collection or list of features. Each feature can represent a distinct input such as a touch. In most cases, each feature can include its own unique identifier (ID), x coordinate, y coordinate, Z magnitude, angle Θ, area A, and the like. By way of example, FIGS. **4**A and **4**B illustrate a particular image **120** in time. In image **120**, there are two features **122** based on two distinct touches. The touches can for example be formed from a pair of fingers touching the touch screen. As shown, each

feature **122** can include unique identifier (ID), x coordinate, y coordinate, Z magnitude, angle .theta., and area A. More particularly, the first feature **122**A is represented by ID_1, X_1, Y_1, Z_1, Θ_1, A_1 and the second feature **122**B is represented by ID_2, X_2, Y_2, Z_2, Θ_2, A_2. This data can be outputted for example using a multi-touch protocol.

The conversion from data or images to features can be accomplished using methods described in U.S. Patent Publication No. US2006/009771. As disclosed therein, the raw data can typically be received in a digitized form, and can include values for each node of the touch screen. The values can be between 0 and 256 where 0 equates to no touch pressure and 256 equates to full touch pressure. Thereafter, the raw data can be filtered to reduce noise. Once filtered, gradient data, which indicates the topology of each group of connected points, can be generated. Thereafter, the boundaries for touch regions can be calculated based on the gradient data (i.e., a determination is made as to which points are grouped together to form each touch region). By way of example, a watershed algorithm can be used. Once the boundaries are determined, the data for each of the touch regions can be calculated (e.g., X, Y, Z, θ, A).

Following block **104**, multipoint processing method **100** proceeds to block **106** where feature classification and groupings can be performed. During classification, the identity of each of the features can be determined. For example, the features can be classified as a particular finger, thumb, palm or other object. Once classified, the features can be grouped. The manner in which the groups are formed can be widely varied. In most cases, the features can be grouped based on some criteria (e.g., they carry a similar attribute). For example, the two features shown in FIGS. **4**A and **4**B can be grouped together because each of these features can be located in proximity to each other or because they can be from the same hand. The grouping can include some level of filtering to filter out features that are not part of the touch event. In filtering, one or more features can be rejected because they either meet some predefined criteria or because they do not meet some criteria. By way of example, one of the features can be classified as a thumb located at the edge of a tablet PC. Because the thumb can be used to hold the device rather than being used to perform a task, the feature generated therefrom can be rejected, i.e., is not considered part of the touch event being processed.

Following block **106**, the multipoint processing method **100** proceeds to block **108** where key parameters for the feature groups can be calculated. The key parameters can include distance between features, x/y centroid of all features, feature rotation, total pressure of the group (e.g., pressure at centroid), and the like. As shown in FIG. **5**, the calculation can include finding the centroid C, drawing a virtual line **130** to each feature from the centroid C, defining the distance D for each virtual line (D_1 and D_2), and then averaging the distances D_1 and D_2. Once the parameters are calculated, the parameter values can be reported. The parameter values can typically be reported with a group identifier (GID) and number of features within each group (in this case three). In most cases, both initial and current parameter values can be reported. The initial parameter values can be based on set down or touch down, i.e., when the user sets their fingers on the touch screen, and the current values can be based on any point within a stroke occurring after set down.

As should be appreciated, blocks **102-108** are repetitively performed during a user stroke thereby generating a plurality of sequentially configured signals. The initial and current parameters can be compared in later steps to perform actions in the system.

Following block **108**, the process flow proceeds to block **110** where the group is or can be associated with a user interface (UI) element. UI elements can be buttons boxes, lists, sliders, wheels, knobs, pictures, documents, icons, etc. Each UI element can represent a component or control of the user interface. The application behind the UI element(s) can have access to the parameter data calculated in block **108**. In one implementation, the application can rank the relevance of the touch data to the UI element corresponding there to. The ranking can be based on some predetermined criteria. The ranking can include producing a figure of merit, and whichever UI element has the highest figure of merit, giving it sole access to the group. There can even be some degree of hysteresis as well (once one of the UI elements claims control of that group, the group sticks with the UI element until another UI element has a much higher ranking). By way of example, the ranking can include determining proximity of the centroid (or features) to the image object associated with the UI element.

Following block **110**, the multipoint processing method **100** proceeds to blocks **112** and **114**. The blocks **112** and **114** can be performed approximately at the same time. From the user perspective, in one embodiment, the blocks **112** and **114** appear to be performed concurrently. In block **112**, one or more actions can be performed based on differences between initial and current parameter values, and can also be based on a UI element to which they are associated, if any. In block **114**, user feedback pertaining to the one or more action being performed can be provided. By way of example, user feedback can include display, audio, tactile feedback and/or the like.

FIG. **6** is a parameter calculation method **150**, in accordance with one embodiment of the present invention. The parameter calculation method **150** can, for example, correspond to block **108** shown in FIG. **3**. The parameter calculation method **150** generally begins at block **152** where a group of features can be received. Following block **152**, the parameter calculation method **150** proceeds to block **154** where a determination can be made as to whether or not the number of features in the group of features has changed. For example, the number of features can have changed due to the user picking up or placing an additional finger. Different fingers can be needed to perform different controls (e.g., tracking, gesturing). If the number of features has changed, the parameter calculation method **150** can proceed to block **156** where the initial parameter values can be calculated. If the number stays the same, the parameter calculation method **150** can proceed to block **158** where the current parameter values can be calculated. Thereafter, the parameter calculation method **150** proceeds to block **160** where the initial and current parameter values can be reported. By way of example, the initial parameter values can contain the average initial distance between points (or Distance (AVG) initial) and the current parameter values can contain the average current distance between points (or Distance (AVG) current). These can be compared in subsequent steps in order to control various aspects of a computer system.

The above methods and techniques can be used to implement any number of GUI interface objects and actions. For example, gestures can be created to detect and effect a user command to resize a window, scroll a display, rotate an object, zoom in or out of a displayed view, delete or insert text or other objects, etc.

A basic category of gestures can allow a user to input the common commands that can be inputted through the use of a conventional mouse or trackball instrument. FIG. **7**F shows a flow chart for processing the detection of mouse-click

actions. Starting with block **710**, detection can be made of either one or two touches by fingers. If the touch detected is determined **711** to be one finger, then a determination **712** can be made as to whether the touch is in a predetermined proximity of a displayed image object that is associated with a selectable file object, and if so, then a selection action can be made **714**. If a double tap action is detected **716** in association with a selectable object, then a double-click action can be invoked **718**. A double tap action can be determined by the detection of a finger leaving the touch screen and immediately retouching the touch screen twice. In accordance with an alternative embodiment, a double-click action can also be invoked if it is detected that a finger touch on a selected object remains for more than a predetermined period of time.

As shown in FIG. **7**G, if the one finger touch detected is not associated with a selectable file object, but rather is determined **720** to be associated with a network address hyperlink, then a single-click action can be invoked whereby the hyperlink is activated. If the hyperlink was touched within a non-browser environment, then a browser application would also be launched.

If a two finger touch is detected **711**, then if at least one of the touchdown point is associated with a selectable file object **713**, then a selection **715** can be made of the object. If one or more tap by one of the fingers on the touch sensitive display is detected **717** while the touchdown point is maintained, then a right-click mouse action can be invoked.

In accordance with a preferred embodiment, if a touch or touches detected are not associated with any selectable file object or hyperlinks, then as shown in FIG. **7**H, a determination **722** can be made as to whether the touchdown point(s) is/are associated with a scrollable area, such as text editing application window, a file listing window, or an Internet webpage.

Scrolling generally pertains to moving displayed data or images across a viewing area on a display screen so that a new set of data is brought into view in the viewing area. In most cases, once the viewing area is full, each new set of data appears at the edge of the viewing area and all other sets of data move over one position. That is, the new set of data appears for each set of data that moves out of the viewing area. In essence, these functions allow a user to view consecutive sets of data currently outside of the viewing area. In most cases, the user is able to accelerate their traversal through the data sets by moving his or her finger at greater speeds. Examples of scrolling through lists can be found in U.S. Patent Publication Nos. 2003/0076303A1, 2003/0076301A1, 2003/0095096A1, which are herein incorporated by reference.

If the touch down point(s) is/are within a scrollable area, then a scrolling action can be invoked **723** similar to the pressing down of a scroll wheel on a conventional mouse instrument. If the scrollable area is scrollable in only one direction (e.g., up and down), then the scrolling action invoked will be unidirectional scroll. If the scrollable area is scrollable two dimensionally, then the scrolling action invoked will be omnidirectional.

In a unidirectional scrolling action where the scrolling is restricted to the vertical direction (i.e., the Y axis), only the vertical vector component of the tracked touch movement can be used as input for effecting vertical scrolling. Similarly, in a unidirectional scrolling action where the scrolling is restricted to the horizontal direction (i.e., the X axis), only the horizontal vector component of the tracked touch movement can be used as input for effecting horizontal scrolling. If the scrolling action is omnidirectional, then the scrolling action effected can track the movement of the tracked touch.

If the detected touch is a one finger touch, then the scrolling action is ready to be performed **724** at a normal, or 1×, speed. If and once the touched down finger begins to move on the touch screen, then a scroll action can be performed by tracking the movement of the touchdown point on the touch screen. If the detected touch is a two finger touch, then the scrolling action can be performed **725** at a double, or 2× speed. Additional fingers can be added to perform even faster scrolling action, where a detection of a four finger touch can be translated into "pg up" or "pg dn" commands within a multi-page document window.

In accordance with another embodiment, the displayed data can continue to move even when the finger is removed from the touch screen. The continuous motion can be based at least in part on the previous motion. For example the scrolling can be continued in the same direction and speed. In some cases, the scrolling slow down over time, i.e., the speed of the traversal through the media items can get slower and slower until the scrolling eventually stops, thereby leaving a static list. By way of example, each new media item brought into the viewing area can incrementally decrease the speed. Alternatively or additionally, the displayed data can stop moving when the finger is placed back on the touch screen. That is, the placement of the finger back on the touch screen can implement braking, which can stop or slow down the continuous acting motion.

By way of examples to illustrate the above discussed gestural actions, as shown in FIG. **7**A, using a touch screen (such as the multi-touch screen **24** shown in FIG. **2**), a single finger tap with a finger **501** on an image object (e.g., a file listing **500**) can be translated into the equivalent of a single click of a mouse, which in this instance can indicate a selection, which is typically indicated by highlighting of the selected file or image object. A detected double tap on the image object can be translated into the equivalent of a double click of a mouse, which can invoke a launch of an application associated with the image object tapped. For instance, a double tapping of a file listing on a screen, such as a photo file, can cause the launch of a photo viewer application and the opening of that photo file.

Drag-and-drop function can be invoked by touching, with at least one finger, the image associated with the object to be dropped and graphically dragging the object to the desired drop location by maintaining the touch, such as shown in FIG. **7**B, illustrating a drag and drop of a file listing **501** from folder window **502** to folder window **503**.

Certain mouse functionalities can require two touches to complete. For instance, as shown in FIG. **7**C, a "right click" gesture can be invoked by two fingers, with one finger as the touchdown finger **506** and a second finger **507** tapping the screen at least once to indicate a right click action. FIG. **7**D illustrates that, after a right click action is performed, an action window **504** can be invoked, after which the first finger can move over to the invoked window **504** to select and tap an action item **505** with a single finger **506**. In accordance with one embodiment of the invention, a right click action can be effected only if the tapping detected is located in close proximity of the detected touchdown, and only if the tapping detected is located to the left of the touchdown finger (right of the touchdown finger from the user's point of view).

Other file selection functions that can normally require a combination of mouse and keyboard action can be performed using only touch action. For instance, in the Microsoft Windows environment, in to select multiple files within file window **502**, a user typically needs to hold down the shift button while dragging the mouse icon over the sequential files to be selected. Without holding down the shift button, the dragging

of the mouse icon can be interpreted as a drag and drop action. As shown in FIG. **7**E, in accordance with an embodiment of the present invention, a detection of two closely associated touch drag of a file listings can be read as a multi-selection action for selecting a group of files **508**. In order to avoid misinterpreting the two-touch action as another command, such as a rotating action, the two-touch multi-selection function can be invoked only if the two touches detected are in relative close proximity to each other.

Referring to the scrolling actions described in FIG. **7**H, and as shown in FIGS. **7**I and **7**J, a one or two finger touchdown within a scrollable window can cause the displayed content of the window to scroll at different speeds. Specifically, once a scrolling action is invoked **723**, the scrolling takes' place at 1× speed **724** if it is determined that only one finger (or one touchdown point) is detected on the touch sensitive display, and at 2× speed if two fingers (or two touchdown points) are detected. In accordance with a preferred embodiment, during the scroll action, scroll bars **727** and **728** can move in correspondence to the direction of the scrolls.

Finally, using a multi-touch display that is capable of proximity detection, such as the panels described in the aforementioned and incorporated by reference commonly assigned co-pending U.S. application Ser. No. 10/840,862 (published as U.S. Patent Publication No. US2006/0097991) and an application entitled "Proximity and Multi-Touch Sensor Detection and Demodulation," Ser. No. 11/649,998, filed on Jan. 3, 2007, gestures of a finger can also be used to invoke hovering action that is can be the equivalent of hovering a mouse icon over an image object.

By way of an example, referring to FIG. **7**K, the detection of proximity of a user's finger **501** over application icons **731** within a desktop **729** can be interpreted as a hovering action, which can invoke the rolling popup of the hovered application icon **730**. If the user touches the popped up icon, then a double-click action can be invoked whereby the application can be launched. Similar concepts can be applied application specific situations, such as when photo files are displayed in a thumbnail format within a photo management software, and a detection of proximity of a finger over a thumbnail invokes a hover action whereby the size of the hovered photo thumbnail can be enlarged (but not selected).

Gestures can also be used to invoke and manipulate virtual control interfaces, such as volume knobs, switches, sliders, keyboards, and other virtual interfaces that can be created to facilitate human interaction with a computing system or a consumer electronic item. By way of an example, using a gesture to invoke a virtual control interface, and referring to FIGS. **8**A-**8**H, a rotate gesture for controlling a virtual volume knob **170** on a GUI interface **172** of a display **174** of a tablet PC **175** will be described. In order to actuate the knob **170**, the user places their fingers **176** on a multipoint touch screen **178**. The virtual control knob can already be displayed, or the particular number, orientation or profile of the fingers at set down, or the movement of the fingers immediately thereafter, or some combination of these and other characteristics of the user's interaction can invoke the virtual control knob to be displayed. In either case, the computing system can associate a finger group to the virtual control knob and can make a determination that the user intends to use the virtual volume knob.

This association can also be based in part on the mode or current state of the computing device at the time of the input. For example, the same gesture can be interpreted alternatively as a volume knob gesture if a song is currently playing on the computing device, or as a rotate command if an object editing application is being executed. Other user feedback can be provided, including for example audible or tactile feedback.

Once the knob **170** is displayed as shown in FIG. **8**A, the user's fingers **176** can be positioned around the knob **170** similar to if it were an actual knob or dial, and thereafter can be rotated around the knob **170** in order to simulate turning the knob **170**. Again, audible feedback in the form of a clicking sound or tactile feedback in the form of vibration, for example, can be provided as the knob **170** is "rotated." The user can also use their other hand to hold the tablet PC **175**.

As shown in FIG. **8**B, the multipoint touch screen **178** can detect at least a pair of images. In particular, a first image **180** can be created at set down, and at least one other image **182** can be created when the fingers **176** are rotated. Although only two images are shown, in most cases there canca be many more images that incrementally occur between these two images. Each image can represent a profile of the fingers in contact with the touch screen at a particular instant in time. These images can also be referred to as touch images. It will be understood that the term "image" does not mean that the profile is displayed on the screen **178** (but rather imaged by the touch sensing device). It should also be noted that although the term "image" is used, the data can be in other forms representative of the touch plane at various times.

As shown in FIG. **8**C, each of the images **180** and **182** can be converted to a collection of features **184**. Each feature **184** can be associated with a particular touch as for example from the tips each of the fingers **176** surrounding the knob **170** as well as the thumb of the other hand **177** used to hold the tablet PC **175**.

As shown in FIG. **8**D, the features **184** can be classified, i.e., each finger/thumb can be identified, and grouped for each of the images **180** and **182**. In this particular case, the features **184**A associated with the knob **170** can be grouped together to form group **188**, and the feature **184**B associated with the thumb is filtered out. In alternative arrangements, the thumb feature **184**B can be treated as a separate feature by itself (or in another group), for example, to alter the input or operational mode of the system or to implement another gesture, for example, a slider gesture associated with an equalizer slider displayed on the screen in the area of the thumb (or other finger).

As shown in FIG. **8**E, the key parameters of the feature group **188** can be calculated for each image **180** and **182**. The key parameters associated with the first image **180** represent the initial state and the key parameters of the second image **182** represent the current state.

Also as shown in FIG. **8**E, the knob **170** can be the UI element associated with the feature group **188** because of its proximity to the knob **170**. Thereafter, as shown in FIG. **8**F, the key parameter values of the feature group **188** from each image **180** and **182** can be compared to determine the rotation vector, i.e., the group of features rotated five (5) degrees clockwise from the initial to current state. In FIG. **8**F, the initial feature group (image **180**) is shown in dashed lines while the current feature group (image **182**) is shown in solid lines.

As shown in FIG. **8**G, based on the rotation vector, the speaker **192** of the tablet PC **175** increases (or decreases) its output in accordance with the amount of rotation of the fingers **176**, e.g., increase the volume by 5% based on rotation of 5 degrees. The display **174** of the tablet PC can also adjust the rotation of the knob **170** in accordance with the amount of rotation of the fingers **176**, e.g., the position of the knob **170** rotates five (5) degrees. In most cases, the rotation of the knob can occur simultaneously with the rotation of the fingers, i.e., for every degree of finger rotation the knob can rotate a

degree. In essence, the virtual control knob can follow the gesture occurring on the screen. Still further, an audio unit **194** of the tablet PC can provide a clicking sound for each unit of rotation, e.g., provide five clicks based on rotation of five degrees. Still yet further, a haptics unit **196** of the tablet PC **175** can provide a certain amount of vibration or other tactile feedback for each click thereby simulating an actual knob.

It should be noted that additional gestures can be performed simultaneously with the virtual control knob gesture. For example, more than one virtual control knob can be controlled at the same time using both hands, i.e., one hand for each virtual control knob. Alternatively or additionally, one or more slider bars can be controlled at the same time as the virtual control knob, i.e., one hand operates the virtual control knob, while at least one finger and maybe more than one finger of the opposite hand can operate at least one slider and maybe more than one slider bar, e.g., slider bar for each finger.

It should also be noted that although the described embodiment utilizes a virtual control knob, in another embodiment, the UI element can be a virtual scroll wheel. As an example, the virtual scroll wheel can mimic an actual scroll wheel such as those described in U.S. Patent Publication Nos. US2003/0076303A1, US2003/0076301A1, and US2003/0095096A1, all of which are herein incorporated by reference.

FIG. **9** is a diagram of a touch-based method **200** in accordance with one embodiment of the present invention. The method generally begins at block **202** where a user input that occurs over a multipoint sensing device is detected. The user input can include one or more touch inputs, with each touch input having a unique identifier. Following block **202**, the touch-based method **200** proceeds to block **204** where the user input can be classified as a tracking or selection input when the user input can include a single unique identifier (one touch input), or can be classified as a gesture input when the user input can include at least two unique identifiers (more than one touch input). If the user input is classified as a tracking input, the touch-based method **200** proceeds to block **206** where tracking can be performed corresponding to the user input.

If the user input is classified as a gesture input, the touch-based method **200** proceeds to block **208** where one or more gesture control actions can be performed corresponding to the user input. The gesture control actions can be based at least in part on changes that occur with or between the at least two unique identifiers.

FIG. **10** is a diagram of a touch-based method **250** in accordance with one embodiment of the present invention. The touch-based method **250** generally begins at block **252** where an initial image can be captured during an input stroke on a touch sensitive surface. Following block **252**, the touch-based method **250** proceeds to block **254** where the touch mode can be determined based on the initial image. For example, if the initial image includes a single unique identifier then the touch mode can correspond to a tracking or selection mode. On the other hand, if the image includes more than one unique identifier, then the touch mode can correspond to a gesture mode.

Following block **254**, the touch-based method **250** proceeds to block **256** where a next image can be captured during the input stroke on the touch sensitive surface. Images can be captured sequentially during the stroke and thus the there can be a plurality of images associated with the stroke.

Following block **256**, touch-based method **250** proceeds to block **258** where a determination can be made as to whether the touch mode changed between capture of the initial image and capture of the next image. If the touch mode changed, the touch-based method **250** proceeds to block **260** where the next image can be set as the initial image and thereafter the touch mode can again be determined at block **254** based on the new initial image. If the touch mode stayed the same, the touch-based method **250** proceeds to block **262** where the initial and next images can be compared and one or more control signals can be generated based on the comparison.

FIG. **11** is a diagram of a touch-based method **300** in accordance with one embodiment of the present invention. The touch-based method **300** begins at block **302** where an image object, which can be a GUI object, can be output. For example, a processor can instruct a display to display a particular image object. Following block **302**, the touch-based method **300** proceeds to block **304** where a gesture input can be received over the image object. For instance, a user can set or move their fingers in a gestural way on the surface of the touch screen and while over the displayed image object. The gestural input can include one or more single gestures that occur consecutively or multiple gestures that occur simultaneously. Each of the gestures generally can have a particular sequence, motion, or orientation associated therewith. For example, a gesture can include spreading fingers apart or closing fingers together, rotating the fingers, translating the fingers, and/or the like.

Following block **304**, the touch-based method **300** proceeds to block **306** where the Image object can be modified based on and in unison with the gesture input. By modified, it is meant that the image object can change according to the particular gesture or gestures being performed. By in unison, it is meant that the changes can occur approximately while the gesture or gestures are being performed. In most cases, there is a one to one relationship between the gesture(s) and the changes occurring at the image object and they occur substantially simultaneously. In essence, the image object follows the motion of the fingers. For example, spreading of the fingers can simultaneously enlarge the object, closing of the fingers can simultaneously reduce the image object, rotating the fingers can simultaneously rotate the object, and translating the fingers can allow simultaneous panning or scrolling of the image object.

In one embodiment, block **306** can include determining which image object is associated with the gesture being performed, and thereafter locking the displayed object to the fingers disposed over it such that the image object changes in accordance with the gestural input. By locking or associating the fingers to the image object, the image object can continuously adjust itself in accordance to what the fingers are doing on the touch screen. Often the determination and locking occurs at set down, i.e., when the finger is positioned on the touch screen.

FIG. **12** is a diagram of a zoom gesture method **350** in accordance with one embodiment of the present invention. The zoom gesture can be performed on a multipoint touch screen such as the multi-touch panel **24** shown in FIG. **2**. The zoom gesture method **350** generally begins at block **352** where the presence of at least a first finger and a second finger are detected on a touch sensitive surface at the same time. The presence of at least two fingers can be configured to indicate that the touch is a gestural touch rather than a tracking touch based on one finger. In some cases, the presence of only two fingers indicates that the touch is a gestural touch. In other cases, any number of more than two fingers indicates that the touch is a gestural touch. In fact, the gestural touch can be configured to operate whether two, three, four or more fingers are touching, and even if the numbers change during the gesture, i.e., only need a minimum of two fingers at any time during the gesture.

Following block **352**, the zoom gesture method **350** proceeds to block **354** where the distance between at least the two fingers can be compared. The distance can be from finger to finger or from each finger to some other reference point as for example the centroid. If the distance between the two fingers increases (spread apart), a zoom-in signal can be generated as shown in block **356**. If the distance between two fingers decreases (close together), a zoom-out signal can be generated as shown in block **358**. In most cases, the set down of the fingers will associate or lock the fingers to a particular image object being displayed. For example, the touch sensitive surface can be a touch screen, and the image object can be displayed on the touch screen. This typically occurs when at least one of the fingers is positioned over the image object. As a result, when the fingers are moved apart, the zoom-in signal can be used to increase the size of the embedded features in the image object and when the fingers are pinched together, the zoom-out signal can be used to decrease the size of embedded features in the object. The zooming typically occurs within a predefined boundary such as the periphery of the display, the periphery of a window, the edge of the image object, and/or the like. The embedded features can be formed on a plurality of layers, each of which represents a different level of zoom.

In most cases, the amount of zooming varies according to the distance between the two objects. Furthermore, the zooming typically can occur substantially simultaneously with the motion of the objects. For instance, as the fingers spread apart or closes together, the object zooms in or zooms out at the same time. Although this methodology is directed at zooming, it should be noted that it can also be used for enlarging or reducing. The zoom gesture method **350** can be particularly useful in graphical programs such as publishing, photo, and drawing programs. Moreover, zooming can be used to control a peripheral device such as a camera, i.e., when the finger is spread apart, the camera zooms out, and when the fingers are closed the camera zooms in.

FIGS. **13**A-**13**H illustrate a zooming sequence using the method described above. FIG. **13**A illustrates a display presenting an image object **364** in the form of a map of North America with embedded levels which can be zoomed. In some cases, as shown, the image object is positioned inside a window that forms a boundary of the image object **364**. FIG. **13**B illustrates a user positioning their fingers **366** over a region of North America **368**, particularly the United States **370** and more particularly California **372**. In order to zoom in on California **372**, the user starts to spread their fingers **366** apart as shown in FIG. **13**C. As the fingers **366** spread apart further (detected distance increases), the map zooms in further on Northern California **374**, then to a particular region of Northern California **374**, then to the Bay area **376**, then to the peninsula **378** (e.g., the area between San Francisco and San Jose Area), and then to the city of San Carlos **380** located between San Francisco and San Jose as illustrated in FIGS. **13**D-**13**H. In order to zoom out of San Carlos **380** and back to North America **368**, the fingers **366** can be closed back together following the sequence described above, but in reverse.

FIG. **14** is a diagram of a pan method **400**, in accordance with one embodiment of the present invention. The pan gesture can be performed on a multipoint touch screen. The pan method **400** generally begins at block **402** where the presence of at least a first object and a second object are detected on a touch sensitive surface at the same time. The presence of at least two fingers can be configured to indicate that the touch is a gestural touch rather than a tracking touch based on one finger. In some cases, the presence of only two fingers indicates that the touch is a gestural touch. In other cases, any number of more than two fingers indicates that the touch is a gestural touch. In fact, the gestural touch can be configured to operate whether two, three, four or more fingers are touching, and even if the numbers change during the gesture, i.e., need a minimum of only two fingers.

Following block **402**, the pan method **400** proceeds to block **404** where the position of the two objects when the objects are moved together across the touch screen can be monitored. Following block **404**, the pan method **400** proceeds to block **406** where a pan signal can be generated when the position of the two objects changes relative to an initial position. In most cases, the set down of the fingers can lock the fingers to a particular image object displayed on the touch screen. As a result, when the fingers are moved together across the touch screen, the pan signal can be used to translate the image in the direction of the fingers. In most cases, the amount of panning varies according to the distance the two objects move. Furthermore, the panning typically can occur substantially simultaneously with the motion of the objects. For instance, as the fingers move, the object moves with the fingers at the same time.

FIGS. **15**A-**15**D illustrate a panning sequence based on the pan method **400** described above. Using the map of FIG. **13**A, FIG. **15**A illustrates a user positioning their fingers **366** over the map. Upon set down, the fingers **366** are locked to the map. As shown in FIG. **15**B, when the fingers **366** are moved vertically up, the entire map **364** can be moved up, thereby causing previously seen portions of map **364** to be placed outside the viewing area and unseen portions of the map **364** to be placed inside the viewing area. As shown in FIG. **15**C, when the fingers **366** are moved horizontally sideways, the entire map **364** can be moved sideways thereby causing previously seen portions of map **364** to be placed outside the viewing area and unseen portions of the map to be placed inside the viewing area. As shown in FIG. **15**D, when the fingers **366** are moved diagonally, the entire map **364** can be moved diagonally thereby causing previously seen portions of map **364** to be placed outside the viewing area and unseen portions of the map to be placed inside the viewing area. As should be appreciated, the motion of the map **364** follows the motion of the fingers **366**. This process is similar to sliding a piece of paper along a table. The pressure the fingers exert on the paper locks the paper to the fingers and when the fingers are slid across the table, the piece of paper moves with them.

FIG. **16** is a diagram of a rotate method **450**, in accordance with one embodiment of the present invention. The rotate gesture can be performed on a multipoint touch screen. The rotate method **450** generally begins at block **452** where the presence of a first object and a second object can be detected at the same time. The presence of at least two fingers can be configured to indicate that the touch is a gestural touch rather than a tracking touch based on one finger. In some cases, the presence of only two fingers indicates that the touch can be a gestural touch. In other cases, any number of more than two fingers indicates that the touch can be a gestural touch. In still some other instances, the gestural touch can be configured to operate whether two, three, four or more fingers are touching, and even if the numbers change during the gesture, i.e., only need a minimum of two fingers.

Following block **452**, the rotate method **450** proceeds to block **454** where the angle of each of the finger can be set. The angles can typically be determined relative to a reference point. Following block **454**, rotate method **450** proceeds to block **456** where a rotate signal can be generated when the angle of at least one of the objects changes relative to the reference point. In most cases, the set down of the fingers can

associate or lock the fingers to a particular image object displayed on the touch screen. Typically, when at least one of the fingers is positioned over the image on the image object, the image object can be associated with or locked to the fingers. As a result, when the fingers are rotated, the rotate signal can be used to rotate the object in the direction of finger rotation (e.g., clockwise, counterclockwise). In most cases, the amount of object rotation varies according to the amount of finger rotation, i.e., if the fingers move 5 degrees then so will the object. Furthermore, the rotation typically can occur substantially simultaneously with the motion of the fingers. For instance, as the fingers rotate, the object rotates with the fingers at the same time.

FIGS. **17**A-**17**C illustrate a rotating sequence based on the method described above. Using the map of FIG. **13**, FIG. **17**A illustrates a user positioning their fingers **366** over the map **364**. Upon set down, the fingers **366** are locked to the map **364**. As shown in FIG. **17**B, when the fingers **366** are rotated in a clockwise direction, the entire map **364** is rotated in the clockwise direction in accordance with the rotating fingers **366**. As shown in FIG. **17**C, when the fingers **366** are rotated in a counterclockwise direction, the entire map **364** is rotated in the counter clockwise direction in accordance with the rotating fingers **366**.

It should be noted that the methods described in FIGS. **12-17** can be implemented during the same gestural stroke. That is, zooming, rotating and panning can all be performed during the gestural stroke, which can include spreading, rotating and sliding fingers. For example, upon set down with at least two fingers, the displayed object (map) can be associated or locked to the two fingers. In order to zoom, the user can spread or close their fingers. In order to rotate, the user can rotate their fingers. In order to pan, the user can slid their fingers. Each of these actions can occur simultaneously in a continuous motion. For example, the user can spread and close their fingers while rotating and sliding them across the touch screen. Alternatively, the user can segment each of these motions without having to reset the gestural stroke. For example, the user can first spread their fingers, then rotate their fingers, then close their fingers, then slide their fingers and so on.

Further details on the detection, interpretation and use of gestures are described in Applicant's co-pending U.S. patent application Ser. No. 11/038,590 entitled "Mode-Based Graphical User Interfaces for Touch Sensitive Input Devices," filed Jan. 18, 2005, and published as U.S. Patent Publication No. 2006/0026535 on Feb. 2, 2006, the contents of which are incorporated by reference herein. Further details on detecting touches on a surface and interpreting them as gestures are described in Applicant's co-pending U.S. patent application Ser. No. 11/428,522 entitled "Identifying Contacts on a Touch Surface," filed Jul. 3, 2006, and published as U.S. Patent Publication No. 2006/0238522 on Oct. 26, 2006, the contents of which are incorporated by reference herein. Further details on "knuckle" and "pengrip" detection are described in U.S. Pat. No. 6,323,846 entitled "Method and Apparatus for Integrating Manual Input," the contents of which are incorporated by reference herein.

"Real-world" gestures such as hand or finger movements/orientations that are generally recognized to mean certain things (e.g., an "OK" hand signal generally indicates an affirmative response) can be detected by the touch or hover sensitive device and interpreted by the multipoint processing method to more efficiently and accurately effect intended operations. Like other gestures described above, "real-world" gestures can be detected and interpreted by first obtaining one or more images of touch, classifying and grouping the features, calculating any key parameters of the groups, associating the groups with UI elements where applicable, and then performing the appropriate action.

FIGS. **18***a*-**18***c* illustrate an exemplary "OK gesture" according to embodiments of this invention. An "OK gesture" formed by either hand over a touch or hover sensitive device can be detected and interpreted to perform operations requiring an affirmative response, such as a text box UI element that asks the user whether a certain action is to be taken (e.g. "Are you sure you want to delete this file?").

To detect an "OK gesture," either a touch sensor panel with some hover detecting capability or a touch sensor panel co-located with a proximity sensor panel can be employed. FIG. **18***a* illustrates an exemplary orientation of a right hand **1800** giving an "OK gesture" over a UI element **1810** appearing beneath sensor panel **1802** according to embodiments of this invention. In some embodiments, the thumb and index finger in the "OK" gesture can touch the sensor panel. Note that although single-hand gestures will generally be described and illustrated herein as right-handed operations, it should be understood that embodiments of this invention are equally applicable to left-handed operations.

In FIG. **18***b*, the image of actual touch **1804** may not look like an "OK gesture" at all, because only the user's thumb, index finger, "pinky" finger and palm edge may actually make contact with the sensor panel. However, if a sensor panel with sufficient near-field and/or far-field sensitivity is utilized, the image can appear more like that shown in FIG. **18***c*, with some or all of index finger and thumb **1806** being detected, although portion **1804** can have a much higher "magnitude" or z-component as compared to portion **1806**, because portion **1804** is closer to the sensor panel. In some embodiments, image **1804** can be detected by a touch sensor panel, while image **1806** can be detected by a co-located proximity sensor panel. Images **1804** and **1806** can together be converted into a single feature as described above, or the images can be converted into two separate but overlapping features if image magnitude values are used to separate the two features.

If a single feature is found, and the various characteristics indicative of an "OK gesture" are present (e.g., either images **1804** of FIG. **18***b*, or a "finger circle" portion including an image of weak touch or hover **1806** that completely or almost completely encircles a region of no detected touch or hover **1808**, in combination with one or more adjacent longer and tapering "palm edge and pinky" images **1804**), then that feature can be classified as an "OK gesture." If two features are found, one can be classified as a "palm edge and pinky" feature and the other can be classified as a "thumb/index finger" feature or a "finger circle" feature, and both features can be grouped together. The grouping can then be analyzed to determine if the grouping indicates that a hand forming an "OK gesture" is present. Note that the presence of other images in the same general area, or the absence of certain image portions (e.g. the image portion caused by the pinky finger) is missing, can cause a lack of recognition of the "OK gesture."

After the features have been classified and grouped, parameters for the group can be computed, such as an approximate center **1812** of the region of no detected touch or hover, and if this center is located coincident with the UI element (e.g. text box **1810** in FIG. **18***a*), the UI element can be associated with the group. An appropriate action can then be taken. In the present example, the detection of an "OK gesture" image coincident with the "Are you sure you want to delete this file?" text box can cause the file to be deleted.

FIGS. **19***a*-**19***e* illustrate an exemplary "grasp everything gesture" according to embodiments of this invention. A

"grasp everything gesture" formed by either hand over a touch or hover sensitive device can be detected and interpreted to perform operations requiring a grouping action, such as the grouping of UI elements such as file icons or graphics symbols on a desktop or drawing page.

To detect a "grasp everything gesture," either a touch sensor panel with some hover detecting capability or a touch sensor panel co-located with a proximity sensor panel can be employed. FIGS. **19***a* and **19***b* illustrate a right hand **1900** performing a "grasp everything gesture" over a plurality of UI elements **1902** appearing beneath sensor panel **1904** according to embodiments of this invention. In FIG. **19***a*, right hand **1900** can have a palm resting on the sensor panel with fingers extended and touching the sensor panel at the approximate circumferential or oblong boundary **1906** of an area within which UI elements **1902** can be grouped. FIG. **19***b* shows the image of touch corresponding to FIG. **19***a*, including palm heel image **1916** and fingerprint images **1908**. In FIG. **19***b*, images **1916** and **1908** can be classified as palm and fingerprint features, respectively, and can be grouped together if their spacings and orientations indicate that they are from the same hand, for example. In some embodiments, the multipoint processing method can receive one or more inputs that cause the multipoint processing method to enter a certain mode and begin to convert the received images **1908** into features, and classify, group, and interpret images as the start of a possible "grasp everything gesture." In other embodiments, the detection of images **1916** and **1908** spaced apart at distances indicating the presence of a single spread hand can trigger the multipoint processing method to begin tracking these images as the start of a possible "grasp everything gesture." In other embodiments, the context of images **1908**, such as if they should appear over a desktop, can cause the images to be classified, grouped, and interpreted as the start of a possible "grasp everything gesture." In either case, parameters for the group can then be computed, such as circumferential boundary **1906**.

FIG. **19***c* shows right hand **1900** in a clenched fist shape **1910** after the "grasp everything gesture" has been completed. In corresponding FIG. **19***d*, after completion of the gesture, the detected image can now include a palm image **1916** and images **1918**, which can represent the light touches of fingerprints or first knuckles resting on the sensor panel. However, between the images of FIG. **19***b* and **19***d*, as the user's fingers were being drawn together into a clenched fist, temporary images **1920** may have been detected. These temporary images **1920** can be stored and used to more accurately determine that a "grasp everything gesture" has been performed. In other words, to enhance the robustness of the detection of the "grasp everything gesture," temporary images **1920** can be tracked over time and detected as being pulled inward for some distance, with a gradually lighter "touch," before disappearing, to further insure the detection of fingers being pulled inward and upward toward the palm.

If the images and corresponding features are tracked over time, the completion of a "grasp everything gesture" can be accurately detected. At that point, all UI elements **1902** within the calculated circumferential boundary **1906** can be associated with the "grasp everything gesture" and selected together, for example. Any UI elements outside this boundary would not be "grasped." Note, however, that if after some time has passed, instead of the images of FIG. **19***d*, no image of touch is detected, this can indicate that the user has merely lifted the hand off of the sensor panel without performing a "grasp everything gesture," and in that case the "grasp everything gesture" would not be detected.

After the "grasp everything gesture" has been detected and the corresponding UI elements have been grouped, the user can utilize various input mechanisms to take further actions with regard to the grasped UI elements. In an exemplary extension of the "grasp everything feature," if images **1916** and **1918** are further tracked over time and rapidly get weaker and quickly disappear, indicating that the user may have quickly pulled the clenched hand away from the touch screen, this can be further interpreted as a "throw away" gesture to discard the grasped UI elements (i.e. a "grasp and delete everything gesture").

FIGS. **20***a*-**20***b* illustrate an exemplary "stamp of approval gesture" according to embodiments of this invention. A "stamp of approval gesture" formed by either hand over a touch or hover sensitive device can be detected and interpreted to perform operations requiring an affirmative response, such as a UI element including text that asks the user whether a certain action is to be taken (e.g. "Do you accept all highlighted changes?").

To detect a "stamp of approval gesture," either a touch sensor panel with some hover detecting capability or a touch sensor panel co-located with a proximity sensor panel can be employed. FIG. **20***a* illustrates an exemplary orientation of a right hand **2000** giving a "stamp of approval gesture" over a UI element **2002** appearing beneath sensor panel **2004** according to embodiments of this invention. In FIG. **20***b*, the image of actual touch **2006** may not look like a "stamp of approval gesture" at all, because only the user's curled "pinky" finger and palm edge can actually make contact with the sensor panel. To enhance the unambiguous detection of a "stamp of approval gesture," image **2006** can be required to appear and disappear rapidly, which would indicate a characteristic stamping motion by the user.

After the detected image **2006** has been converted to one or more features and classified and grouped as a "stamp of approval gesture," parameters for the feature can be computed, such as an approximate center **2008** of the "stamp of approval gesture," and if this center is located coincident with the UI element (e.g. text box **2002** in FIG. **20***a*), the UI element is associated with the gestures and appropriate action can then be taken. In the present example, the detection of an "stamp of approval gesture" coincident with the "Do you accept all highlighted changes?" text box can cause the changes to become permanent.

FIGS. **21***a*-**21***b* illustrate an exemplary "circle select gesture" according to embodiments of this invention. A "circle select gesture" formed by either hand over a touch or hover sensitive device can be detected and interpreted to perform operations requiring a grouping action, such as the grouping of UI elements such as file icons or graphics symbols on a desktop or drawing page.

To detect a "circle select everything gesture," either a touch sensor panel with some hover detecting capability or a touch sensor panel co-located with a proximity sensor panel can be employed. FIG. **21***a* illustrates a right hand **2100** giving a "circle select gesture" over a plurality of UI elements **2102** appearing beneath sensor panel **2104** according to embodiments of this invention. In FIG. **21***a*, right hand **2100** can have only index finger extended and touching the sensor panel, although it should be understood that other fingers can be used as well. Over time, the index finger can trace the approximate boundary **2106** of an area within which UI elements **2102** can be grouped or selected. The boundary can be generally circular, oval, oblong or any shape that eventually closes on itself. FIG. **21***b* shows the image of touch corresponding to FIG. **21***a*, including fingerprint images **2108** changing over time. In some embodiments, image processing

logic can receive one or more inputs that cause the image processing logic to enter a certain mode and begin to convert the received images **2108** into features, and classify, group, and interpret the features as the start of a possible "circle select gesture." In other embodiments, the context of images **2108**, such as if the images should appear over a desktop or graphics application, can cause the images to be converted into features, classified, grouped, and interpreted as the start of a possible "circle select gesture." In either case, parameters for the group can then be computed, such as circumferential boundary **2106**.

If a "circle select gesture" is detected, all UI elements **2102** within the circumferential boundary **2106** can be associated with the gesture and selected together, for example. Any UI elements outside this boundary would not be selected. However, if after some time has passed, the moving image of touch **2108** has not yet substantially returned to its starting point, this can indicate that the user has abandoned the "circle select gesture" or did not intend that gesture at all, and in that case no UI elements would be selected.

After the "circle select gesture" has been detected and the corresponding UI elements have been selected, the user can utilize various input mechanisms to take further actions with regard to the selected UI elements. For example, the selected UI elements can be copied, moved, or deleted as a group.

FIGS. **22***a*-**22***d* illustrate an exemplary "X to delete gesture" according to embodiments of this invention. An "X to delete gesture" formed by either hand over a touch or hover sensitive device can be detected and interpreted to perform operations requiring a deleting action, such as the deleting of a UI element such as file icon or graphics symbol on a desktop or drawing page.

To detect a "X to delete gesture," either a touch sensor panel with some hover detecting capability or a touch sensor panel co-located with a proximity sensor panel can be employed. FIG. **22***a* illustrates a right hand **2200** beginning a "X to delete gesture" over a UI element **2202** appearing beneath sensor panel **2204** according to embodiments of this invention. In FIG. **22***a*, right hand **2200** can have only index finger extended and touching the sensor panel, although it should be understood that any finger can be used. Over time, the index finger can trace the first stroke **2006** of an "X" over UI element **2202**. FIG. **22***b* shows a series of images of touch corresponding to FIG. **22***a*, including fingerprint images **2208** changing over time. In some embodiments, image processing logic can receive one or more inputs that cause the image processing logic to enter a certain mode and begin to convert the received images **2208** into features, and classify, group, and interpret the features as the start of a possible "X to delete gesture." In other embodiments, images **2208** can be stored until further information is received that indicates this is the start of a possible "X to delete gesture."

After stroke **2206** is completed, the user can then lift the finger off the sensor panel and begin a second stroke **2208** shown in FIG. **22***c*. Over time, the index finger can trace the second stroke **2210** of the "X" over UI element **2202**. FIG. **22***d* shows a series of images of touch corresponding to FIG. **22***c*, including fingerprint images **2212** changing over time. In some embodiments, image processing logic can receive one or more inputs that cause the processing logic to classify, group, and interpret images **2212** as the second stroke of a possible "X to delete gesture." In other embodiments, images **2212** can be stored until stroke **2210** has been completed and it is confirmed that an "X to delete gesture" has been properly received. To ensure an accurate detection of the "X to delete gesture," the multipoint processing method can require that the strokes **2206** and **2210** be completed within a short time of each other.

If an "X to delete gesture" is detected, parameters can be computed such as the intersection between the first and second strokes **2206** and **2210**. The UI element **2202** beneath the between the first and second strokes **2206** and **2210** can then be selected for deletion. Those UI elements that did not appear under the intersection would not be deleted. Note that if, for example, after some time has passed, the second stroke **2210** is not detected, this can indicate that the user has abandoned the "X to delete gesture" or that it was never intended to be an "X to delete gesture," and in that case no UI elements would be selected and deleted.

FIGS. **23***a*-**23***b* illustrate an exemplary "knock to inquire gesture" according to embodiments of this invention. A "knock to inquire gesture" formed by either hand over a touch or hover sensitive device can be detected and interpreted to perform operations requiring an inquiry action, such as determining whether an application, file, person of interest or other entity is available to be opened, accessed, communicated with, and the like.

To detect a "knock to inquire gesture," either a touch sensor panel with some hover detecting capability or a touch sensor panel co-located with a proximity sensor panel can be employed. FIG. **23***a* illustrates a right hand **2300** executing a "knock to inquire gesture" over a UI element **2302** appearing beneath sensor panel **2304** according to embodiments of this invention. Although not visible in FIG. **23***a*, right hand **2300** can have only one to four knuckles actually contacting the sensor panel at any time. FIG. **23***b* shows exemplary images of touch **2306** corresponding to knuckles contacting the sensor panel in FIG. **23***a*. These images can be converted to features, and grouped and classified as knuckle features. Although not shown in FIG. **23***b*, images **2306** can be generally repeated two or more times, representing a typical knocking motion. In some embodiments, image processing logic can receive one or more inputs that cause the processing logic to classify, group, and interpret images **2306** as the start of a possible "knock to inquire gesture." In other embodiments, images **2306** can be stored until further information is received that indicates this is the start of a possible "knock to inquire gesture." For example, after two or more groupings of images **2306** are received in rapid succession, the image processing logic can interpret these repetitively received, similarly located groups of images **2306** as a "knock to inquire gesture."

If a "knock to inquire gesture" is detected, parameters can be computed such as the approximate center location **2308** of the knuckle on the middle finger. The UI element **2302** beneath center location **2308** can then be associated with the gesture and selected for inquiry. Those UI elements that did not appear under center location **2308** would not be selected. Note that if, for example, after a first group of images **2306** are detected, similar groups of images are not received in rapid succession, this can indicate that a "knock to inquire gesture" is not being performed.

After the "knock to inquire gesture" has been detected and the corresponding UI element has been selected, further actions can be taken with regard to the selected UI element. For example, if the selected UI algorithm is a shared resource such as a limited access application, an inquiry as to whether the application is available to be checked out can be initiated.

FIGS. **24***a*-**24***h* illustrate an exemplary "hitchhiker gesture" according to embodiments of this invention. A "hitchhiker gesture" formed by either hand over a touch or hover sensitive device can be detected and interpreted to perform

operations requiring a directional input, such as a scrolling, panning, windowing, translating in time (e.g., moving backward or forward in time in an audio or video recording), and the like.

To detect a "hitchhiker gesture," either a touch sensor panel with some hover detecting capability or a touch sensor panel co-located with a proximity sensor panel can be employed. FIG. **24***a* illustrates a right hand **2400** executing a "hitchhiker gesture" upon sensor panel **2404** according to embodiments of this invention. Although not visible in FIG. **24***a*, right hand **2400** can have only certain hand parts actually contacting the sensor panel at any time. FIG. **24***b* shows exemplary images of touch **2406** corresponding to the "hitchhiker gesture" in FIG. **24***a*. These images **2406** can be converted to images, and grouped and classified as a left-pointing "hitchhiker gesture." In particular, one of the images **2406** can be identified as corresponding to a thumb, and from that identification a directional parameter (e.g. left) can be calculated. However, if images **2406** are insufficient to detect the left-pointing "hitchhiker gesture" with reasonable accuracy, in some embodiments the near-field proximity detection capabilities of the touch sensors or a co-located proximity sensor panel can be used to detect an outline **2408** of the left-pointing "hitchhiker gesture" to more accurately identify it. Detection of the left-pointing "hitchhiker gesture" can the be used to scroll left, pan left, window left, translate left (earlier) in time (e.g., moving backward or forward in time in an audio or video recording), and the like.

FIGS. **24***c* and **24***d*, FIGS. **24***e* and **24***f*, and FIGS. **24***g* and **24***h* illustrate other orientations, detected touch and/or hover images for the "hitchhiker gesture" pointing in different directions. FIGS. **24***d* and **24***h*, in particular, show how only the user's middle knuckle can form a touch image on sensor panel **2404**, and therefore illustrate how outline **2408** detected by the near-field proximity detection capabilities of the touch sensors or proximity sensors co-located with the touch sensors can be used advantageously to more accurately detect the "hitchhiker gesture."

FIGS. **25***a*-**25***h* illustrate exemplary "shape gestures" according to embodiments of this invention. Shape gestures formed by either or both hands over a touch or hover sensitive device can be detected and interpreted to perform various operations, including creating a graphic image of that shape.

To detect a shape gesture, either a touch sensor panel with some hover detecting capability or a touch sensor panel co-located with a proximity sensor panel can be employed. FIG. **25***a* illustrates both hands **2500** making a "triangle shape gesture" over sensor panel **2502** according to embodiments of this invention. FIG. **25***b* shows the images of actual touch or hover **2504** that can be detected by the sensor panel. FIG. **25***c* illustrates both hands **2500** making a "V shape gesture" over sensor panel **2502** according to embodiments of this invention. FIG. **25***d* shows the images of actual touch **2506** or hover **2512** that can be detected by the sensor panel. FIG. **25***e* illustrates both hands **2500** making an "inverted V shape gesture" over sensor panel **2502** according to embodiments of this invention. FIG. **25***f* shows the images of actual touch **2508** or hover **2516** that can be detected by the sensor panel. FIG. **25***g* illustrates both hands **2500** making an "wing shape gesture" over sensor panel **2502** according to embodiments of this invention. FIG. **25***h* shows the images of actual touch **2510** or hover **2514** that can be detected by the sensor panel.

In any of these examples, the images can be converted to features, which can then be classified, grouped and interpreted as a particular gesture. Each gesture described above can then cause a particular operation to be performed with regard to UI elements appearing with a certain relationship to the gesture (e.g., UI elements within the triangle formed by the "triangle shape gesture" can be selected, zoomed, and the like). In another example, if multiple touch images taken over time indicate that the "V shape gesture" is being shifted upwards, UI elements within the "V" of the "V shape gesture" could be grouped and translated (moved) upward in accordance with the motion of the "V shape gesture." A similar concept could apply to the "inverted V shape gesture." The "wing shape gesture" could, for example, trigger the desktop faxing or sending of a UI element under the gesture (e.g. a document) or trigger the e-mailing of a document over the Internet.

FIGS. **26***a*-**26***d* illustrate exemplary "identification gestures" according to embodiments of this invention. An "identification gesture" formed by either or both hands on or over a touch or hover sensitive device can be detected and interpreted to perform operations requiring an identification action, such determining whether the user is to get access, or continue to have access, to a restricted account, file or other item.

To detect an "identification gesture," either a touch sensor panel with some hover detecting capability or a touch sensor panel co-located with a proximity sensor panel can be employed. FIG. **26***a* illustrates a right hand **2600** beginning an exemplary "identification gesture" over a UI text box element **2608** indicating "Please enter graphical/gestural password" appearing on sensor panel **2602** according to embodiments of this invention. In FIG. **26***a*, right hand **2600** can have only index finger extended and touching the sensor panel, although it should be understood that any one finger or multiple fingers, or even both hands can be used. Over time, the index finger can trace a graphical password **2604**. FIG. **26***b* shows a series of captured images of touch corresponding to FIG. **26***a*, including fingerprint images **2606** changing over time. In some embodiments, image processing logic can receive one or more inputs that cause the image processing logic to enter a certain mode and begin to convert the received images into features, and classify, group, and interpret images **2606** as the start of a possible "identification gesture" as soon as images start to appear. In other embodiments, images **2606** can be stored until further information is received that identifies the images as an "identification gesture." For example, if the complete "identification gesture" is the shape shown in FIG. **26***b*, the composite shape can be recognized as an "identification gesture" only after all images **2606** are fully captured. Note that although the example of FIGS. **26***a* and **26***b* only shows a single stroke by a single hand, it should be understood that one or more strokes, by either or both hands, in series or in parallel, can be used to create an "identification gesture" unique to the user. The gesture need not look like a signature, but can be any symbolic representation of choice.

A time component can optionally be attached to an "identification gesture." For example, the entire "identification gesture" can be required to be completed within a certain period of time (e.g. a few seconds), otherwise the gesture will be rejected.

In another embodiment illustrated in FIG. **26***c*, one or more hands **2600** can be used to form an "identification gesture" that need not touch the sensor panel, or may only partially touch the sensor panel. In the example of FIG. **26***c*, the user's right hand can contact the sensor panel, resulting in one or more vertical images of touch **2610** as shown in FIG. **26***d*. In addition, the user's left hand can only hover over the sensor panel **2602**, resulting in an image of hover **2612** with a characteristic hole **2614** in it. In some embodiments, image processing logic can receive one or more inputs that cause the image processing logic to enter a certain mode and begin to

convert the received images into features, and classify, group, and interpret images **2610** and **2612** as the start of a possible "identification gesture" as soon as images start to appear. In other embodiments, images **2610** and **2612** can be stored until further information is received that identifies the images as an "identification gesture." For example, if the complete "identification gesture" is the images shown in FIG. **26***d*, the composite shape can be recognized as an "identification gesture" only after all images **2610** and **2612** are fully captured. It should be understood that FIGS. **26***a*-**26***d* are only exemplary in nature, and that a virtually unlimited number of gestures could be used as identification gestures.

In another embodiment illustrated in FIG. **26***e*, the thumb and another finger of hands **2600** can be placed together near a center of the touch sensor panel, resulting in the image of touch **2616** as shown in FIG. **26***f*, and then spread towards the four corners of the touch sensor panel, generating intermediate images **2618**. Recognition of this "unlock gesture" can unlock and object on application. Alternatively, as shown in FIG. **26***g*, the thumb and another finger of hands **2600** can be placed towards the four corners of the touch sensor panel, resulting in the image of touch **2620** as shown in FIG. **26***h*, and then moved towards the center of the touch sensor panel, generating intermediate images **2622**. Recognition of this "lock gesture" can lock and object on application.

FIGS. **27***a*-**27***k* illustrate an exemplary "hand edge gesture" according to embodiments of this invention. A "hand edge gesture" can be formed by initially placing the edge of either hand (palm edge plus pinky finger edge) over a touch or hover sensitive device, with the thumb pointing upwards away from the sensor panel or alongside the index finger. With the thumb pointing toward the ceiling (or along surface normal vector), the wrist can advantageously have a much wider range of motion for rotation/orientation than in any other hand arrangement (including rotation with five fingertips, or a hand flat on surface). The hand edge gesture, optionally along with various sweeping motions, can be detected and interpreted to perform operations such as quickly orienting an application or control along the elongated axis defined by the detected hand edge, changing to another desktop, sweeping away applications, icons, files, performing undo or redo operations, and the like.

To detect a "hand edge gesture," either a touch sensor panel with some hover detecting capability or a touch sensor panel co-located with a proximity sensor panel can be employed. FIGS. **27***a* and **27***b* illustrate a right hand **2700** beginning a general "hand edge gesture" over one or more UI elements **2710** appearing beneath sensor panel **2702** according to embodiments of this invention. In FIG. **27***b*, the image of actual touch **2704** may not look like a "hand edge gesture" at all, because only the user's "pinky" finger and palm edge may actually make contact with the sensor panel. Images **2704** can together be converted into a single feature as described above.

FIG. **27***c* shows image of touch **2704** as the right hand edge is swept towards the user's body. FIG. **27***c* shows intermediate touch images **2706** and **2708**, although it should be understood that a number of intermediate touch images **1900** are generated as the right hand edge is swept. FIG. **27***d* shows an alternative in which the right hand is initially placed down in a horizontal position, creating touch image **2710**, and then swept away from the user, creating intermediate touch images **2712** and **2714**. FIG. **27***e* shows another alternative in which the right hand is initially placed down in a horizontal position, creating touch image **2716**, and then moved away from the user while maintaining the horizontal orientation, creating intermediate touch images **2718** and **2720**. FIG. **27***f* shows yet another alternative in which the right hand is initially placed down in a horizontal position, creating touch image **2722**, and then moved toward the user while maintaining the horizontal orientation, creating intermediate touch images **2724** and **2726**. FIG. **27***g* shows yet another alternative in which the right hand is initially placed down in a vertical position, creating touch image **2728**, and then moved to the right while maintaining the vertical orientation, creating intermediate touch images **2730** and **2732**. FIG. **27***h* shows yet another alternative in which the right hand is initially placed down in a vertical position, creating touch image **2734**, and then moved to the left while maintaining the vertical orientation, creating intermediate touch images **2736** and **2738**. FIG. **27***i* shows yet another alternative in which the right hand is initially placed down in a vertical position, creating touch image **2740**, and then moved up and down in a "sawing" motion while maintaining the vertical orientation, creating intermediate touch images **2742** (shown time-elapsed at times T**1**-T**5** and visually separated for clarity—note that there can be no actual horizontal motion in the gesture). FIG. **27***j* shows yet another alternative in which the right hand is initially placed down in a vertical position, creating touch image **2744**, and then only the pinky and one or more of the other non-thumb fingers are partially curled or brought perpendicular to the thumb, creating intermediate touch images **2746** and **2748**. FIG. **27***k* shows yet another alternative in which the right hand is initially placed down with the palm in a vertical position and fingers partially curled or perpendicular to the thumb, creating touch image **2750**, and then only the pinky and one or more of the other non-thumb fingers are straighten to vertical, creating intermediate touch images **2752** and **2754**. In a "flick off" embodiment, the pinky made end up not touching the sensor panel, in which case intermediate image **2754** would not be present.

If the images and corresponding features are tracked over time, the completion of various "hand edge gestures" can be accurately detected. At that point, one or more UI elements appearing on the touch screen at the time the gesture was detected can be associated with the "hand edge gesture." After a particular "hand edge gesture" has been detected and the corresponding UI elements have been associated with the gesture, various actions can be taken with regard to the associated UI elements. For example, the detection of a hand edge gesture, without more, can be used to quickly "orient" an application or control along the elongated axis defined by the orientation of the touch image. A rotational sweep of the touch image from vertical to horizontal, can be used to "sweep away" the UI elements, or dismiss the normal desktop to bring up alternative desktops, switch users, lock the screen, and the like. A sweep from horizontal to vertical, a straightening of fingers to vertical, or a flicking action can be used to reverse the operation, e.g. resume normal desktop/workspace. Sweeping the touch image from left edge to right edge can be used to perform an erase operation (e.g. clear a drawing), switch to a workspace or virtual desktop on the right, or perform a continuous redo (or forward on a timeline). Sweeping the touch image from right edge to left edge can be used to switch to a workspace/virtual desktop on the left or perform a continuous undo (or backup on a timeline). For instance, in a drawing application, these gestures could undo/redo one pivot point at a time on drawn paths, polygons or bezier curves. Sweeping from top to bottom edge or vice versa can similarly clear a drawing, switch workspaces, users, or virtual desktops, or hide an application or UI element, while sweeping from bottom to top can be used to maximize the application or UI element. "Sawing" the gesture up and down can be used to vertically split the window or view.

FIGS. **28***a*-**28***b* illustrate an exemplary "framing gesture" according to embodiments of this invention. A "framing gesture" formed by one or both hands over a touch or hover sensitive device can be detected and interpreted to perform operations requiring definition of a certain area.

FIG. **28***a* illustrates an exemplary orientation of hands **2800** giving a "framing gesture" over area **2802** according to embodiments of this invention. FIG. **28***b* shows the image of actual touch **2806**, which can be roughly the shape of an upside-down U. After the detected image **2806** has been converted to one or more features and classified and grouped as a "framing gesture," parameters for the feature can be computed, such as an approximate window or area **2802** framed by the "framing gesture," and appropriate action can then be taken. Framed window **2802** can be used to open a detail portal, magnifier, or dialog, or place a photo, for example.

In any of these exemplary identification gestures, the images can be converted to features, which can then be classified, grouped and interpreted as an identification gesture. Each identification gesture can then be associated with a particular user and UI element for which access is sought, and depending on whether access rights have been satisfied, the user may or may not be granted access to the UI element.

Although the present invention has been fully described in connection with embodiments thereof with reference to the accompanying drawings, it is to be noted that various changes and modifications will become apparent to those skilled in the art. Such changes and modifications are to be understood as being included within the scope of the present invention as defined by the appended claims.

What is claimed is:

1. A method for receiving a grouping gesture formed on or about a sensor panel, comprising:

detecting a plurality of images at the sensor panel generated from a hand changing from a palm-down, outstretched shape to a clenched shape, each of the plurality of images comprising multiple hand contact points;

determining that the plurality of images are arranged in space and time in a pattern and sequence corresponding to a predetermined grasp everything gesture;

determining a circumferential boundary from at least one of the plurality of images, wherein the circumferential boundary circumscribes the multiple hand contact points as a group;

associating the grasp everything gesture with user interface (UI) elements within the circumferential boundary; and

performing a grouping action in accordance with the UI elements within the circumferential boundary.

2. The method of claim **1**, further comprising determining that the plurality of images are arranged in space and time in a pattern and sequence corresponding to a predetermined grasp everything gesture by

identifying five initial images corresponding to outstretched fingers and thumb and a palm heel image from a single hand; and

determining that the five initial images move closer to the palm heel image over time.

3. A method for receiving a selection gesture formed on or about a sensor panel, comprising:

detecting an image at the sensor panel generated from a single finger;

tracking movement of the image over time;

determining that the movement of the image is arranged in space and time in a pattern and sequence corresponding to a predetermined circle select gesture;

determining a circumferential boundary from the movement of the image;

associating the circle select gesture with user interface (UI) elements within the circumferential boundary; and

performing a selecting action in accordance with the UI elements within the circumferential boundary.

4. The method of claim **3**, further comprising determining that the movement of the image is arranged in space and time in a pattern and sequence corresponding to a predetermined circle select gesture by:

determining that the image substantially returns to its initial position over time.

5. A method for receiving a deletion gesture formed on or about a sensor panel, comprising:

detecting a first image at the sensor panel generated from a single finger and representative of a first touch;

tracking movement of the first image over time;

detecting a second image at the sensor panel generate from the same finger and representative of a second touch;

tracking movement of the second image over time;

determining that the movement of the first and second images are arranged in space and time in a pattern and sequence corresponding to a predetermined X to delete gesture;

determining an intersection of the movements of the first and second images;

associating the X to delete gesture with a user interface (UI) element coincident with the intersection; and

performing a deleting action in accordance with the UI element coincident with the intersection.

6. The method of claim **5**, further comprising determining that the movement of the first and second images are arranged in space and time in a pattern and sequence corresponding to a predetermined X to delete gesture by:

determining that the first and second images were detected within a predetermined time interval.

7. A method for receiving an inquiry gesture formed on or about a sensor panel, comprising:

detecting one or more substantially linearly arranged first images at the sensor panel generated from one or more knuckles in a clenched fist and representative of a first knock;

detecting one or more substantially linearly arranged second images at the sensor panel generated from the same knuckles and representative of a second knock;

determining that the first and second images are arranged in space and time in a pattern and sequence corresponding to a predetermined knock to inquire gesture;

determining a centering parameter from the first or second images;

associating the knock to inquire gesture with a user interface (UI) element coincident with the centering parameter; and

performing an inquiry action in accordance with the UI element coincident with the centering parameter.

8. The method of claim **7**, further comprising determining that the first and second images are arranged in space and time in a pattern and sequence corresponding to a predetermined knock to inquire gesture by:

determining that the first and second images were detected within a predetermined time interval.

9. A computer-readable medium comprising program code for receiving a grouping gesture formed on or about a sensor panel, the program code for causing performance of a method comprising:

detecting a plurality of images at the sensor panel generated from a hand changing from a palm-down, outstretched shape to a clenched shape, each of the plurality of images comprising multiple hand contact points;

determining that the plurality of images are arranged in space and time in a pattern and sequence corresponding to a predetermined grasp everything gesture;

determining a circumferential boundary from at least one of the plurality of images, wherein the circumferential boundary circumscribes the multiple hand contact points as a group;

associating the grasp everything gesture with user interface (UI) elements within the circumferential boundary; and

performing a grouping action in accordance with the UI elements within the circumferential boundary.

10. The computer-readable medium of claim **9**, the method further comprising determining that the plurality of images are arranged in space and time in a pattern and sequence corresponding to a predetermined grasp everything gesture by:

identifying five initial images corresponding to outstretched fingers and thumb and a palm heel image from a single hand; and

determining that the five initial images move closer to the palm heel image over time.

11. A computer-readable medium comprising program code for receiving an inquiry gesture formed on or about a sensor panel, the program code for causing performance of a method comprising:

detecting one or more substantially linearly arranged first images at the sensor panel generated from one or more knuckles in a clenched fist and representative of a first knock;

detecting one or more substantially linearly arranged second images at the sensor panel generated from the same knuckles and representative of a second knock;

determining that the first and second images are arranged in space and time in a pattern and sequence corresponding to a predetermined knock to inquire gesture;

determining a centering parameter from the first or second images;

associating the knock to inquire gesture with a user interface (UI) element coincident with the centering parameter; and

performing an inquiry action in accordance with the UI element coincident with the centering parameter.

12. The computer-readable medium of claim **11**, the method further comprising determining that the first and second images are arranged in space and time in a pattern and sequence corresponding to a predetermined knock to inquire gesture by:

determining that the first and second images were detected within a predetermined time interval.

* * * * *

UNITED STATES PATENT AND TRADEMARK OFFICE

CERTIFICATE OF CORRECTION

PATENT NO. : 7,877,707 B2
APPLICATION NO. : 11/818500
DATED : January 25, 2011
INVENTOR(S) : Wayne Carl Westerman et al.

It is certified that error appears in the above-identified patent and that said Letters Patent is hereby corrected as shown below:

In column 6, line 60, delete “111” and insert -- 11 --, therefor.

In column 14, line 15, delete “canca” and insert -- can --, therefor.

In column 14, line 35, delete “188,” and insert -- 188 --, therefor.

In column 25, line 25, delete “the” and insert -- then --, therefor.

Signed and Sealed this
Twenty-fifth Day of October, 2011

David J. Kappos

David J. Kappos
Director of the United States Patent and Trademark Office