U.S. Department
of Transportation
**National Highway
Traffic Safety
Administration**

NHTSA
People Saving People
www.nhtsa.dot.gov

DOT HS 809 812

June 2004
Technical Manual

Speed-Measuring Device Performance Specifications: Down-The-Road Radar Module

This document is available to the public from the National Technical Information Service, Springfield, Virginia 22161

Kustom Exhibit 2009
Applied Concepts v. Kustom Signals
IPR2024-00829

FOREWORD

This document contains the radar speed-measuring device performance specifications developed by the National Highway Traffic Safety Administration (NHTSA) through a Cooperative Agreement with the International Association of Chiefs of Police (IACP) and in consultation with the National Institute of Standards and Technology (NIST), Office of Law Enforcement Standards (OLES). Because this document is designed as a development and procurement aid, it is necessarily highly technical.

This document supersedes the *Model Performance Specifications for Police Traffic Radar Devices* (DOT HS 806 191, March 1982) and all subsequent revisions.

By defining minimum performance requirements and verification procedures, this technical document establishes a baseline for acceptable traffic radar speed- measuring device performance. Citizens, courts, and law enforcement officers should be assured that those radar speed-measuring device models, determined by test to comply with these specifications, will provide the high-quality service they require.

Radar equipment buyers should use these performance specifications as a model to develop purchasing criteria. It is recommended that these specifications be incorporated into procurement documents requiring that radar speed-measuring devices offered for purchase meet, as a minimum, these specifications.

Manufacturers are encouraged to produce radar speed-measuring devices that meet or exceed these performance specifications.

These performance specifications are subject to continuing review. Technical comments and recommended revisions are welcome. Send suggestions to:

Enforcement and Justice Services Division
National Highway Traffic Safety Administration
400 Seventh Street, S.W. (NTI-122)
Washington, DC 20590

Before citing these performance specifications, or any part of them, users should verify that the most recent edition of this document is being used.

NHTSA believes these performance specifications for radar speed-measuring devices will assist law enforcement administrators in determining the accuracy and reliability of radar devices they purchase. NHTSA also believes these performance specifications and testing protocols will increase the confidence of the public, the courts and law enforcement officers in the accuracy and reliability of radar speed-measuring devices.

ACKNOWLEDGMENTS

The National Highway Traffic Safety Administration wishes to express appreciation to these individuals who have contributed to this document:

A. George Lieberman, Ph.D.
Program Manager, Office of Law Enforcement Standards
National Institute of Standards and Technology

Richard R. Larson
Program Manager, Radar Testing Program
International Association of Chiefs of Police

Members of the Enforcement Technologies Advisory Technical
Subcommittee ((ETATS), Highway Safety Committee
International Association of Chiefs of Police

Appreciation is also extended to the manufacturers of radar speed-measuring devices for their cooperation in the preparation of this document.

TABLE OF CONTENTS

Page

Foreword i

Acknowledgments iii

Section 1 - General Information
- §1.1 Scope 1-1
- §1.2 Purpose 1-1
- §1.3 Application 1-1
- §1.4 Definitions 1-1

Section 2 - Requirements
- §2.1 Manufacturer Provided Equipment 2-1
- §2.2 Manufacturer Provided Information 2-1
- §2.3 Manufacturer Labeling 2-2
- §2.4 Tuning Fork Calibration 2-3
- §2.5 Radar Device Tuning Fork 2-3
- §2.6 Microwave Transmission 2-4
- §2.7 Environmental Extremes 2-5
- §2.8 Low Supply Voltage Indicator 2-5
- §2.9 Doppler Audio 2-5
- §2.10 Speed Monitor Alert 2-6
- §2.11 Power Surge 2-6
- §2.12 Speed Display 2-6
- §2.13 Conducted Electromagnetic Interference 2-9
- §2.14 Radiated Electromagnetic Interference 2-10
- §2.15 Speed Accuracy: Field Operation 2-11

Section 3 - Test Conditions
- §3.1 Test Conditions 3-1

Section 4 - Test Equipment
- §4.1 Test Equipment 4-1
- §4.2 Audio Frequency Synthesizer 4-1
- §4.3 Microphone 4-1
- §4.4 Environmental Chamber 4-1
- §4.5 Anechoic Chamber 4-1
- §4.6 Microwave Frequency Counter 4-1
- §4.7 Field Strength Meter 4-2
- §4.8 Isotropic Probe 4-2
- §4.9 Simulator Test Range 4-2
- §4.10 Line Impedance Stabilization Network (LISN) 4-2
- §4.11 Isolation Transformer 4-3
- §4.12 Pulse Generator 4-3
- §4.13 Sawtooth Wave Generator 4-3

§4.14 FM Signal Generator 4-3
§4.15 AM Signal Generator 4-3
§4.16 Power Meter 4-3
§4.17 Stopwatch 4-4
§4.18 Oscilloscope 4-4
§4.19 Slide Whistle 4-4

Section 5 - Test Procedures
§5.1 (Reserved) 5-1
§5.2 (Reserved) 5-1
§5.3 Labeling and Operation Tests 5-1
§5.4 Tuning Fork Calibration Test 5-1
§5.5 Radar Device Tuning Fork Test 5-2
§5.6 Microwave Transmission Test 5-4
§5.7 Environmental Tests 5-6
§5.8 Low Supply Voltage Indicator Test 5-6
§5.9 Doppler Audio Tests 5-7
§5.10 Speed Monitor Alert Test 5-8
§5.11 Power Surge Test 5-8
§5.12 Speed Display Test 5-8
§5.13 Conducted Electromagnetic Interference Tests 5-14
§5.14 Radiated Electromagnetic Interference Tests 5-17
§5.15 Speed Accuracy: Field Operation Tests 5-18

Appendix A-1
Table 1 - Minimum Performance Specifications for DTR Radar Speed-Measuring Devices A-2
Figure 1 - The line impedance stabilization network (LISN) A-3
Figure 2 - The tuning-fork calibration setup A-4
Figure 3 - The transmission frequency and frequency stability measurements setup A-5
Figure 4 - The input current and low supply voltage measurements setup A-6
Figure 5 - The antenna beamwidth measurement setup A-7
Figure 6 - The antenna beamwidth correction factor, F A-8
Figure 7 - The antenna near-field power density measurement setup A-9
Figure 8 - Block diagram of the DTR radar target simulator A-10
Figure 8a - Schematic of balanced modulator shown in figure 8 ..... A-11
Figure 8b - Digital phase shifter and bias circuit shown in figure 8 ..... A-12
Figure 9 - The simulated vehicle alternator interference measurement setup . A-13
Figure 10 - The simulated vehicle ignition, air conditioner/heater, and windshield wiper interference measurements setup A-14
Figure 11 - The simulated police FM transceiver and the citizens band (CB) AM transceiver interference measurements setup A-15

Bibliography B-1

Section 1 - General Information

1.1 Scope

The scope of this document is limited to "down-the-road" radar speed-measuring devices used by law enforcement agencies for enforcing vehicle speed regulations.

1.2 Purpose

The purpose of this document is to specify the minimum performance requirements and test procedures for radar speed-measuring devices used by law enforcement agencies for enforcing vehicle speed regulations.

1.3 Application

This document applies to radar speed-measuring devices that transmit unmodulated continuous-wave (CW) microwave energy, monitor the reflected signal from moving vehicles within the microwave beam, process the Doppler shift of the reflected signal to display the speed of the vehicle that is being tracked, and if applicable, the speed of the patrol vehicle. It does not apply to unmanned radar speed-measuring devices that are mounted at a fixed angle to the roadway that use circuitry to compensate for the reduction in displayed speed due to the cosine effect, nor does it apply to stationary mode radar devices that take photos of vehicles being tracked.

1.4 Definitions

1.4.1 Accuracy - the degree to which the radar device measures and displays the speed of a vehicle.

1.4.2 Ambient Interference - the conducted and/or radiated electromagnetic interference and/or mechanical motion interference, at a specific test location and time, which might be detrimental to proper radar device performance.

1.4.3 Antenna Horizontal Beamwidth - the total included acute angle, in the horizontal plane, of the main lobe between the half-power points of the radar antenna far-field radiation pattern, where the half-power points are measured relative to the maximum power at the center of the beam and on a radius equidistant from the face of the antenna.

1.4.4 Automatic Lock - a control function of a radar device that, when activated, causes the device to retain automatically the displayed speed of a target vehicle when the target speed exceeds some preset value, and preserve that speed displayed until manually reset by the operator.

1.4.5 Closing Speed - the speed at which a target is moving toward the speed-measuring device, measured as the rate of change of a straight line (radius) from the device to the target.

1.4.6 Cosine Effect - the effect due to the target not traveling directly toward or away from the radar device. The effect is always to lower the Doppler shift frequency in direct proportion to the cosine of the angle between the direction of travel and a line from the radar device to the target.

1.4.7 Directional Radar (DR) - A radar that uses the principle that an object moving toward (approaching) the antenna will produce an upward Doppler frequency shift, while an object moving away from (receding from) the antenna will produce a downward Doppler frequency shift. DR is capable of distinguishing between received signals above the transmitted frequency (Upper Sideband) and signals below the transmit frequency (Lower Sideband) in order to determine whether objects are approaching or receding relative to the antenna.

1.4.8 Display - a visual readout device.

1.4.9 Doppler Audio - an audible signal from a radar device generated by driving a loudspeaker with the Doppler-shift beat frequency or with the Doppler-shift beat frequency divided by a fixed factor, provided the audio sound corresponds directly with changes in speed of the target vehicle, and any ambient interference present is discernible.

1.4.10 Doppler Shift - the magnitude of the frequency change of the radar return signal received when the source and the radar reflecting target are in motion relative to one another.

1.4.11 Dual Antenna Radar - a radar device that is capable of using two (2) antennas, and normally deployed with one antenna in the front (forward position) and one in the rear (rearward position).

1.4.12 Erroneous Reading - an incorrect target speed displayed by the radar device that is not due to a target vehicle or which is not within the required accuracy tolerance of a target vehicle's speed after accounting for cosine angle effect.

1.4.13 Far-Field Region - that region beyond the close proximity of a transmitting antenna defined by the relationship $R > 2d^2/\lambda$, where d is the horn diameter and λ is the wavelength of the transmitted frequency, in consistent units.

1.4.14 Fastest Display - the display that provides a readout of a faster target in the radar beam.

1.4.15 Fastest Option - the capability of a radar device to measure and display the speed of a faster target vehicle in either the stationary mode or the opposite-direction moving mode. All radar devices must allow the fastest option to be activated and deactivated by the operator.

1.4.16 Fastest Switch - a control which permits activation of the fastest option. This may be a momentary or toggle function.

1.4.17 Internal Circuit Test - a test function (whether manually or automatically initiated) that verifies that all radar device internal signal processing circuitry, except for the microwave transmitter and receiver, is working correctly, i.e., all target and patrol vehicle signals will be properly processed and displayed.

1.4.18 Just-Acquired Distant Target - a target just within the range of a radar device which was originally beyond the range and now provides a display signal of target speed.

1.4.19 K-Band Radar - a radar speed-measuring device designed to operate in the 24,050 MHz to 24,250 MHz frequency band.

1.4.20 Ka-Band Radar - a radar speed-measuring device designed to operate in the 33,400 MHz to 36,000 MHz frequency band.

1.4.21 Low-Voltage Indicator - a radar device component which alerts the operator to the fact that a low supply-voltage condition exists.

1.4.22 Lower Sideband - that portion of the received Doppler-shifted signal below the radar's transmission frequency containing signals for objects moving away from the antenna.

1.4.23 Microwave Output Power - the power produced by the microwave transmitter that is delivered to the radar antenna.

1.4.24 Moving Mode - the capability of a radar device to measure and display the speed of a target vehicle while the radar device is moving with respect to the surrounding terrain.

1.4.25 Near-Field Region - that region in close proximity to the transmitting antenna that is not included in the region defined as "far-field region."

1.4.26 Nominal Value - the numerical value of a device characteristic as specified by the manufacturer.

1.4.27 Opposite-Direction Moving Mode - the capability of a radar device to measure and display the speed of a target vehicle while the radar device and the target vehicle are moving in opposite directions.

1.4.28 Patrol Channel - that portion of the radar circuitry of a radar device that processes and calculates the speed of a patrol vehicle when the radar device is operating in the moving mode.

1.4.29 Patrol Speed - the speed at which the patrol vehicle is moving with respect to the ground.

1.4.30 Polarization - that property of a radiated electromagnetic wave describing the time-varying direction and magnitude of the electric field vector.

1.4.31 Power Density - power density per unit area or energy density flux per unit area.

1.4.32 Same-Direction Moving Mode - the capability of a radar device to measure and display the speed of a target vehicle while the radar device and the target vehicle are moving in the same direction.

1.4.33 Side Lobes - radar beams from the antenna which are not part of the primary beam, but which may appear as shoulders on the primary beam.

1.4.34 Speed-Display Transfer - the capability of transferring the speed reading from the patrol speed display to the target speed display.

1.4.35 Speed-Monitor Alert - a function that alerts the operator when a target speed signal is received that is equal to or above a pre-selected threshold speed.

1.4.36 Squelch - the capacity of a radar device to inhibit the Doppler audio sound when the radar is in operation and not receiving a target signal.

1.4.37 Standby Mode - the state of a radar device in which power to the microwave oscillator is inhibited, thereby preventing the device from transmitting an rf signal, although all remaining circuitry is normally powered and functioning.

1.4.38 Stationary Mode - the capability of a radar device to operate from a fixed location and display the speed of a target vehicle within the required accuracy tolerance.

1.4.39 Target Channel - the portion of the radar circuitry that processes the closing speed signal, and calculates and displays the speed of a radar target.

1.4.40 Target Display - the display that provides a readout of the strongest target in the radar beam.

1.4.41 Target Speed - the speed of the target vehicle along its path, with respect to the ground.

1.4.42 Target Vehicle - the vehicle identified as producing a given Doppler radar signal that is processed and displayed by the radar device as the target speed.

1.4.43 Track-Through-Lock - the feature of a radar device whereby the unit continues to measure, process and accomplish audio Doppler tracking and, in some cases, displays in real time the target speed after the speed-lock switch has been actuated to the lock condition.

1.4.44 Tuning Fork - a mechanical self-resonant device which, when excited, produces free oscillations that may be used to generate a pseudo Doppler frequency reference when placed in the radar antenna beam.

1.4.45 Upper Sideband - That portion of the received Doppler-shifted signal above the radar transmit frequency containing signals for objects moving toward the antenna.

1.4.46 X-Band Radar - a radar speed-measuring device designed to operate in the frequency band of 10,500 MHz to 10,550 MHz.

Section 2 – Requirements

2.1 Manufacturer Provided Equipment

Each radar device submitted for testing in accordance with the provisions of these specifications shall be accompanied by the following minimum equipment:

2.1.1 Stationary Radar. One tuning fork.

2.1.2 Stationary Radar Incorporating Fastest Option. Two tuning forks.

2.1.3 Moving Radar. Two tuning forks, mounting hardware.

The manufacturer of a radar device who is requesting approval of a characteristic that is outside the specifications contained in this document is required to provide suggested revisions for review by the appropriate IACP Highway Safety Committee designee when submitting the unit under test (UUT). The manufacturer shall supply any adapters or unique test equipment required to test the UUT. (Refer to the IACP Speed-Measuring Device Testing Program Administrative Guide for complete details.)

2.2 Manufacturer Provided Information

2.2.1 Radar Device. Each radar device submitted for testing in accordance with the provisions of these specifications shall be accompanied by the following minimum information:

2.2.1.1 *Installation instructions.* Complete instructions for installing the radar device in or on the patrol vehicle or remote from the vehicle including any precautions necessary to minimize or avoid interference from vehicle ignition, heater/air conditioner/defroster blowers or other potentially interfering components.

2.2.1.2 *Operating instructions.* Complete operating instructions including test procedures, internal circuit test data, required maintenance, and any operating characteristics that are indicative of, or symptomatic of, possible malfunction of the radar device.

2.2.1.3 *Power supply.* Nominal power supply type, voltage and currents (with and without displays illuminated; with and without target present, and in standby mode if appropriate).

2.2.1.4 *Frequency.* The nominal microwave frequency.

2.2.1.5 *Microwave output power.* The nominal value of microwave output power (in milliwatts) as measured by a microwave power meter connected to the microwave oscillator.

2.2.1.6 *Supply voltage.* Lowest and highest supply voltage level at which the radar device is designed to operate, the low-voltage alert threshold value and display behavior.

2.2.1.7 *Microwave power density.* Maximum microwave power density (mW/cm^2) measured in a plane 5 cm (2 in) distant from the front of the antenna.

2.2.1.8 *Horizontal beamwidth.* Antenna horizontal beamwidth in degrees.

2.2.1.9 *Antenna polarization.* Type of antenna polarization, i.e., linear or circular

and orientation.

2.2.1.10 *Operating speed.* Minimum and maximum operating speed of the radar device.

2.2.1.10.1 *Stationary*. Target speed only

2.2.1.10.2 *Moving*. Target and patrol speeds.

2.2.1.11 *Temperature.* The highest and lowest temperature at which the unit is designed to operate.

2.2.1.12 *Temperature and humidity.* The highest temperature and humidity combination at which the radar device is designed to operate.

2.2.2 Tuning Fork. Each tuning fork shall be accompanied by a calibration certificate including as a minimum:

2.2.2.1 *Serial number.* The serial number of the tuning fork.

2.2.2.2 *Design speed.* The nominal design speed.

2.2.2.3 *Frequency calibration.* A frequency calibration at 21°C (70°F).

2.2.2.4 *Frequency band.* The microwave frequency band for which it is to be used: X, K, or Ka.

2.2.2.5 *Associated radar speed.* The calibrated frequency and associated radar speed in mph or km/h.

2.2.2.6 *Correction factor.* Any correction factor that must be applied to the 21°C (70°F) calibration speed when used at another temperature.

2.3 Manufacturer Labeling

2.3.1 Radar Device. The control panel of the radar device shall be permanently marked with the functions and settings of all connectors, switches, controls, and displays. It shall not be possible to set the controls to a functional mode of operation that is not explained in the user manual. Every connector/control shall be labeled, and the labeling shall, at a minimum, be consistent with one of the functions of the connector/control (§5.3.1).

2.3.2 Tuning Fork. The manufacturer shall permanently mark each tuning fork with the following information:

2.3.2.1 *Serial number.* A serial number.

2.3.2.2 *Frequency band.* The radar frequency band that it is to be used with: X, K, or Ka.

2.3.2.3 *Speed specification.* A nominal stationary mode radar speed specification including units (km/h or mph).

2.3.2.4 *Ka-band.* Each Ka-band tuning fork with the nominal microwave frequency of its radar device, or marked with a code representing the same.

2.4 Tuning Fork Calibration

When tested in accordance with §5.4, the measured frequency of each tuning fork shall be within ±½ % of that specified by the manufacturer (§2.2.2.3) in the certificate of calibration for that tuning fork.

2.5 Radar Device Tuning Fork

Each radar device when tested in accordance with §5.5 shall meet the following tuning fork requirements, as appropriate. Directional radar devices must provide a means to disable direction discrimination to permit the radar device to respond to the non-directional tuning fork signal for these tests.

2.5.1 All Radar Devices. Each radar device, when placed in the stationary mode, shall respond to the signal from the tuning fork within ±2 km/h (±1 mph) of the speed corresponding to the tuning fork frequency (§2.2.2.5 and §2.3.2.3).

2.5.2 Opposite-Direction Moving Mode. Each radar device, when placed into the opposite-direction moving mode, shall simultaneously respond to the signals from two vibrating tuning forks of different frequencies, and shall display the calibration speed designated for the lower-frequency tuning fork as the patrol speed, and the difference between the calibration speed designated for the higher-frequency tuning fork and the calibration speed designated for the lower-frequency tuning fork as the target speed; both displayed speeds shall be within ±2 km/h (±1 mph) of the correct values (§2.2.2.5 and §2.3.2.3).

2.5.3 Same-Direction Moving Mode. Each radar device, when placed into the same-direction moving mode (if such capability is provided by the unit) shall simultaneously respond to the signals from two vibrating tuning forks of different frequencies except that directional radar devices shall provide the faster target mode of §2.5.3.1 and/or the slower target mode of §2.5.3.2

2.5.3.1 *Faster-target mode*. The radar device shall display the calibration speed designated for the higher-frequency tuning fork as the patrol speed, and the sum of the calibration speed designated for the higher-frequency tuning fork and calibration speed designated for the lower-frequency tuning fork as the target speed; both displayed speeds shall be within ±2 km/h (±1 mph) of the correct values (§2.2.2.5 and §2.3.2.3).

2.5.3.2 Slower-target mode. The radar device shall display the calibration speed designated for the higher-frequency tuning fork as the patrol speed, and the difference of the calibration speed designated for the higher-frequency tuning fork and the calibration speed designated for the lower-frequency tuning fork as the target speed; both displayed speeds shall be within ±2 km/h (±1 mph) of the correct values.

2.5.4 Radar Devices Incorporating Fastest Option. Each radar device, when placed in the stationary mode, upon activation of the fastest mode feature shall simultaneously respond to the signals from two vibrating tuning forks of different frequencies, and when the higher-frequency tuning fork is held in front of the antenna at a sufficient distance

that the higher-frequency signal is weaker than the lower-frequency signal, shall indicate the calibration speed designated for the higher target speed in the fastest display. Both displayed speeds shall be within ±2 km/h (±1 mph) of the correct values (§2.2.2.5 and §2.3.2.3).

2.6 Microwave Transmission

The microwave characteristics of transmission frequency and frequency stability, input current stability, radiated output power stability, antenna horizontal beamwidth, and antenna near-field power density shall be measured in accordance with §5.6 and shall meet the following requirement:

2.6.1 Transmission Frequency and Frequency Stability. When operated at the standard supply voltage (c.f. §3.1.3), the transmission frequency shall be within the assigned frequency band of 10,500 MHz to 10,550 MHz for X-band radar devices, 24,050 MHz to 24,250 MHz for K-band radar devices, and 33,400 MHz to 36,000 MHz for Ka-band radar devices. For a device intended to operate from a nominal 12 V automotive system, the transmission frequency shall remain within the assigned frequency band if the voltage is raised 20 % above the standard supply voltage, or to the manufacturer's specified limit if higher, and when lowered 20 % below the standard supply voltage or to the manufacturer's specified lower voltage limit, if lower. In addition, for Ka-band radar devices the frequency shall remain within ±100 MHz of its nominal value. For devices utilizing a battery pack, the requirements shall be met if the voltage is raised to the manufacturer's specified upper limit and reduced to the manufacturer's specified lower limit. A radar device powered by a battery pack and designed to also use a nominal 12 V automotive battery and adapter as an optional source of power shall also be tested for transmission frequency and frequency stability utilizing this adapter and a standard supply voltage of 13.6 V ±20 %.

2.6.2 Reserved.

2.6.3 Radiated Output Power Stability. The microwave carrier output power shall not vary by more than ±1.5 dB from the nominal value when the standard supply voltage is varied over the voltage range defined in 2.6.1.

2.6.4 Antenna Horizontal Beamwidth. The total included angle between the -3 dB power points of the main lobe of the microwave beam, relative to the maximum power at the center of the beam, shall not exceed 18° for X-band and 15° for K and Ka-band radar devices.

2.6.5 Antenna Near-Field Power Density. The maximum antenna near-field power density of each radar device shall not exceed 5 mW/cm² or that specified by the manufacturer (§2.2.1.7), which ever is lower. A radar device powered by a battery, and designed to also use a nominal 12 V automotive system and adapter as an optional source of power, shall also be tested for near-field power density utilizing this adapter.

2.6.6 Standby/Operate Switch. The manufacturer of each hand-held radar device shall make available to purchasers the following optional feature. A positive action control (standby/operate switch) for hand-held radar devices which, when operated in the stationary mode, must be held depressed for the radar device to transmit electromagnetic energy. When this control is released, the radar device shall cease to transmit electromagnetic energy. No mechanism shall exist as a part of the radar device to lock this control switch in the transmit position.

2.7 Environmental Extremes

The ability of the radar device to operate in environmental extremes shall be determined using the appropriate test methods described in §5.7 and each radar device shall meet the following requirements:

2.7.1 Operational Temperature Stability. When tested in accordance with §5.7.1, following exposure to a temperature of -30°C (-22°F) or the lowest temperature at which the manufacturer states that the radar device will operate properly (§2.2.1.11), whichever is lower, and following exposure to a temperature of 60°C (140°F) or the highest temperature at which the manufacturer states that the device will operate properly (§2.2.1.11), whichever is higher, each radar device shall continue to meet the requirements of §2.5, §2.6.1, and §2.6.3.

2.7.2 Operational Humidity Stability. When tested in accordance with §5.7.2 following exposure to 90 % relative humidity at 37°C (99°F) for a minimum of 8 h, each radar device shall continue to meet the requirements of §2.5, §2.6.1, §2.6.2, and §2.6.3.

2.8 Low Supply Voltage Indicator

Each radar device shall have a low voltage indicator that alerts the operator either visually or audibly when the supply voltage is reduced below threshold. For a device intended to operate from a nominal 12 V automotive system, the low voltage indicator shall activate if the supply voltage is reduced to 10.8 V, or to the lowest voltage specified by the manufacturer (§2.2.5), whichever is lower. For devices utilizing a battery pack, the low voltage indicator shall activate if the supply voltage is reduced to the lowest operating voltage specified by the manufacturer (§2.2.5). When tested according to §5.8, the radar unit shall not display any erroneous readings at, or below, the threshold voltage that activates the indicator. A blank display is not an erroneous reading.

2.9 Doppler Audio

The Doppler audio output characteristics of audio output and volume control, audio squelch and squelch override, audio track-through-lock, and speed monitor alert shall be tested in accordance with §5.9 and each radar device shall meet the following requirements:

2.9.1 Audio Output and Volume Control. The radar device shall emit a Doppler audio tone that is correlated with the received Doppler signal and any interference present, and it shall have an audio volume-adjustment control.

2.9.2 Audio Squelch and Squelch Override. When the radar device is operated, the Doppler audio tone shall be squelched as long as no target speed signal is being processed. When a target speed signal is present, the Doppler audio signal shall be present in the audio output. The radar device shall permit the operator to inhibit the squelch action to keep the receiver open.

2.9.3 Audio Track-Through-Lock. For those radar devices with a track-through-lock feature, the Doppler audio tone shall continue to follow the received Doppler signal when the speed lock switch is activated.

2.10 Speed-Monitor Alert

The radar device shall not have a speed-monitoring alert capability.

2.11 Power Surge

The power surge characteristics exhibited when switching the radar device from standby to on shall be tested in accordance with §5.11. Switching the radar device from standby to ON shall not cause any erroneous speed readings with a target present.

2.12 Speed Display

The speed-display characteristics of display readability, display speed-lock control, display-clear function, internal circuit test function, speed-display transfer, signal processing channel sensitivity, target channel speed displays, patrol channel speed displays, and auxiliary displays shall be tested in accordance with §5.12 and shall meet the following requirements:

2.12.1 Display Readability. The display shall be clearly readable when tested in accordance with §5.12.1 and used as intended by the manufacturer.

2.12.2 Display Speed-Lock Control. If provided, the speed-lock switch shall:

2.12.2.1 *Speed locked.* Preserve the displayed target vehicle and patrol vehicle (moving mode) speed readings.

2.12.2.2 *Manual lock.* The speed-lock switch shall require manual actuation by the radar device operator and shall not be capable of automatic self-lock.

2.12.2.3 *Track-through-lock.* When the radar device has a track-through-lock capability, the speed reading(s) displayed after locking shall be the target speed and patrol speed (moving mode only) that existed at the instant the speed-lock switch was activated.

2.12.2.4 *Speed recall.* The radar device shall not recall a previous speed reading when the speed-lock switch is activated.

2.12.2.5 *Patrol speed blanking.* The radar device shall not be capable of blanking the patrol speed display except after it is locked.

2.12.3 Display-Clear Function. The selection of a different mode of operation of the radar device such as switching from off to on, lock to clear, between stationary and moving mode, opposite and same-direction mode, or faster and slower target mode, shall automatically clear the radar device of all displayed readings whether the speed-lock switch is activated or not, unless the radar device retains displayed information indicating the mode used to acquire the locked-in target speed. It shall be permissible to accomplish a test sequence without clearing locked-in speed readings.

2.12.4 Internal Circuit Test Function. The radar device shall have a self-test function that, when activated, determines whether or not internal signals will be processed and displayed to within ±2 km/h (±1 mph). The radar device shall display the correct reading(s) when performing the internal circuit test function and it shall be impossible for the radar device to lock-in the speed displays caused by this test. These readings shall be cleared when the radar device is switched to another mode of operation. The internal circuit test switch shall not be labeled "Cal" or "Calibrate."

2.12.5 Speed-Display Transfer. In the moving mode the radar device shall not be capable of transferring the patrol-speed reading from the patrol-speed display to the target-speed display.

2.12.6 Signal Processing Channel Sensitivity

2.12.6.1 *Stationary mode target channel sensitivity.* When the radar device is operating in the stationary mode, its signal processing channel sensitivity shall not vary more than 10 dB for targets traveling at speeds of 56 km/h to 144 km/h (35 mph to 90 mph) nor more than 5 dB for targets traveling at speeds of 96 km/h to 144 km/h (60 mph to 90 mph).

2.12.6.2 *Opposite-direction moving mode target channel sensitivity.* When the radar device is operated in the opposite-direction moving mode at a patrol speed of 40 km/h (25 mph), its closing speed channel sensitivity shall not vary more than 10 dB for targets traveling at speeds of 64 km/h to 144 km/h (40 mph to 90 mph), except for those targets traveling at the patrol speed or a multiple of the patrol speed. When operated at a patrol speed of 80 km/h (50 mph), its closing-speed channel sensitivity shall not vary more than 5 dB for targets traveling at speeds of 96 km/h to 144 km/h (60 mph to 90 mph).

2.12.6.3 *Same-direction moving mode target channel sensitivity.* When the radar device is operated in the same-direction moving mode at a patrol speed of either 64 km/h (40 mph) or 88 km/h (55 mph) its signal processing channel sensitivity shall not vary more than 10 dB for targets traveling faster, or slower, but within 8 km/h to 40 km/h (5 mph to 25 mph) of the patrol speed.

2.12.6.4 *Fastest Option*

2.12.6.4.1 *All radar device types*. When the radar device is operated in the fastest option with a target speed of 40 km/h (25 mph) and a target speed of 64 km/h (40 mph), the fastest display shall indicate the higher of the target speeds.

2.12.6.4.2 *Moving mode only*. When the radar device is operated in the moving fastest option, with a patrol speed of 80 km/h (50 mph) and two target speeds, 64 km/h (40 mph) and 136 km/h (85 mph), the fastest display shall indicate the higher of the target speeds.

2.12.6.5 *Directional Radar Devices.* When operating in a direction-sensing mode, directional radar devices shall be capable of discriminating between targets moving toward and targets moving away from the radar.

2.12.7 Target Channel Low and High Speed Displays

2.12.7.1 *Stationary mode*

2.12.7.1.1 *Low Speed*. The target signal processor channel and the target speed display shall function at a speed of 32 km/h (20 mph) or the lowest speed at which the manufacturer states that the device will operate properly, whichever is lower.

2.12.7.1.2 *High Speed*. The target signal processor channel and the target speed display shall function at a speed of 160 km/h (100 mph) or the highest speed at which the manufacturer states that the device will operate properly, whichever is higher.

2.12.7.2 *Opposite-direction moving mode*

2.12.7.2.1 *Low Speed*. The target signal processor channel and the target speed display shall function properly at a speed of 32 km/h (20 mph) or the lowest speed at which the manufacturer states, whichever is lower.

2.12.7.2.2 *High Speed*. X, K, and Ka-band radar devices shall process closing speeds of at least 272 km/h (170 mph). K-band radar devices shall not process closing speeds of 336 km/h (210 mph) or greater.

2.12.7.3 *Same-direction moving mode*.

2.12.7.3.1 *Low Speed*. The device shall process closing speeds within ±8 km/h (±5 mph) of the patrol speed, or the lowest closing speed the manufacturer states the device will operate properly, whichever is the lower closing speed.

2.12.7.3.2 *High Speed*. X, K, and Ka-band radar devices shall process closing speeds within 40 km/h (25 mph) of the patrol-speed, or the highest closing speeds the manufacturer states that the device will operate properly, whichever is the higher closing speed.

2.12.8 Patrol Channel-Speed Displays (Moving-Radar Devices)

2.12.8.1 *Low and high speed readings*

2.12.8.1.1 *Low Speed*. The patrol signal processor channel and the patrol-speed display shall function as specified in the test procedure of §5.12.8.1, at patrol speeds down to 32 km/h (20 mph) or the lowest patrol speed at which the manufacturer states the device will operate properly (§2.2.1.10), whichever is lower, when operating in the moving mode.

2.12.8.1.2 *High Speed*. The patrol signal processor channel and the patrol-speed display shall function as specified in the test procedure of §5.12.8.1 at a patrol-speed of 112 km/h (70 mph) or the highest patrol-speed at which the manufacturer states the device will operate properly (§2.2.1.10), whichever is higher, when operating in the moving mode.

2.12.8.2 *Patrol-Speed Changes*. When tested in accordance with §5.12.8.2 the patrol signal processor channel shall track the patrol-speed within ±2 km/h (±1 mph) and maintain proper radar device performance while the patrol-speed changes at a rate of 4.8 km/h (3 mph) per second.

2.12.9 Auxiliary Displays. If the radar device has auxiliary speed displays, the requirements specified for the target channel and patrol channel displays shall apply to the auxiliary displays.
If the radar device utilizes a separable, remote display module, this remote module shall display, as a minimum, the retained target speed. The remote module shall blank all displays or display current radar information when reconnected to the radar device.

2.12.10 Same-Direction Moving-Mode Speed Computation Indicator. For non-directional radar devices having a same-direction moving-mode capability the readout unit shall have a visual indicator showing whether target speed is being computed on the basis of a target vehicle traveling faster or slower than the patrol vehicle. This requirement does not apply to directional radar devices that automatically perform the correct faster/slower target speed calculation using direction-of-travel information.

2.12.11 Fastest Option Indicator. For those radar devices having a fastest option (moving or stationary), in which the fastest readout replaces any other speed readout, the readout unit shall have a visual indicator showing that the target speed being displayed is associated with a faster target within the radar beam. This visual indicator is not required if a dedicated readout is used for the fastest display.

2.13 Conducted Electromagnetic Interference

The susceptibility of the radar device to conducted electromagnetic interference (EMI) from the vehicle alternator, vehicle ignition, air conditioner/heater motor, windshield wiper motor and typical police and citizens band transceivers shall be tested in accordance with §5.13. A radar device powered by a battery pack and designed to also accept a nominal 12 V automotive battery and adaptor as an optional source of power, shall also be tested for susceptibility to EMI (§5.13.1 through §5.13.4) utilizing this adaptor. During these tests, a blank target speed display shall not be considered an erroneous reading. Each radar unit, when tested in accordance with §5.13, shall meet the following requirements:

2.13.1 Simulated Vehicle Alternator Interference. When subjected to a 10 μs to 20 μs wide pulse signal of 1 V p-p (peak-to-peak) amplitude (except for transition spikes) having a maximum rise time of 2 μs and a maximum fall time of 2 μs (both excluding ringing) and having a ringing time no greater than 8 μs, with a pulse repetition rate

between 200 pps (pulses per second) and 10,000 pps, the radar device shall not display any erroneous readings.

2.13.2 Simulated Vehicle Ignition, Air Conditioner/Heater Motor and Windshield Wiper Motor Interference. When subjected to a negative ramp sawtooth wave signal of 1 V p-p with a positive rise time of a maximum of 2 μs over a frequency range of 200 Hz to 10 kHz, the radar device shall not display any erroneous readings.

2.13.3 Simulated Police FM Transceiver Interference. When subjected to a 10 mW frequency modulated (FM) radio frequency signal in each police radio frequency band, the radar device shall not display any erroneous speed readings.

2.13.4 Simulated Citizen Band (CB) AM Transceiver Interference. When subjected to a 5 mW amplitude modulated (AM) radio frequency in any of the CB channels specified in §5.13.4, the radar device shall not display any erroneous speed readings.

2.14 Radiated Electromagnetic Interference

The operational test requirements of radio frequency transceiver interference and speed accuracy shall be tested in accordance with §5.14. A radar device powered by a battery pack and designed to also use a nominal 12 V automotive system and adapter as an optional source of power shall also be tested for operability under requirement (§5.14.1) for police FM transceiver interference utilizing this adapter. During these tests, a blank target speed display shall not be considered an erroneous reading. Each radar device shall meet the following requirements:

2.14.1 Police FM Transceiver Interference. The radar device shall not display any erroneous speed readings when a police FM radio transceiver, properly installed in the radar equipped patrol vehicle, is operating while the patrol vehicle is standing still with the radar device in the stationary mode and tracking a just-acquired distant target traveling at a speed of 80 km/h (50 mph). The radar device shall not display any erroneous readings when a hand held police FM transceiver with an integral antenna is operated inside the patrol vehicle under similar circumstances.

2.14.2 Citizens Band (CB) AM Transceiver Interference. The radar device shall not display any erroneous speed readings when a CB AM transceiver properly installed in the radar equipped patrol vehicle is operating while the patrol vehicle is standing still with the radar device in the stationary mode and tracking a just-acquired distant target traveling at a speed of 80 km/h (50 mph).

2.14.3 Adjacent Vehicle Radio Frequency Interference

2.14.3.1 *FM Transceiver.* The radar device shall not display any erroneous speed readings when a second vehicle with a transmitting police FM transceiver is driven within 3 m (10 ft) of the stationary patrol vehicle while the radar device is operating and tracking a just-acquired distant target traveling at a speed of 80 km/h (50 mph).

2.14.3.2 *CB AM Transceiver.* The radar device shall not display any erroneous speed readings when a second vehicle with a transmitting CB AM transceiver is driven within 3 m (10 ft) of the stationary patrol vehicle while the radar device is operating and tracking a just-acquired distant target traveling at a speed of 80 km/h (50 mph).

2.15 Speed Accuracy: Field Operation

When tested in accordance with §5.15, each radar device shall meet the following requirements:

2.15.1 Stationary Mode. When operated in the stationary mode, display the correct speed of a target vehicle traveling at speeds of 32 to 160 km/h (20 to 100 mph) within +2, -3 km/h (+1, -2 mph). Radar devices having direction-discrimination capability shall be capable of discriminating between targets moving toward the radar device and targets moving away from the radar device.

2.15.2 Moving Mode. When operated in the moving mode, display the correct patrol vehicle speed and target vehicle speed of a radar target within ±3 km/h (±2 mph). Radar devices having direction-discrimination capability shall discriminate between targets moving faster than the patrol vehicle and those moving slower than the patrol vehicle in same direction mode and automatically display the correct target vehicle speed while direction discrimination is enabled.

Section 3 - Test Conditions

3.1 Test Conditions

Allow all measurement equipment to warm up until the system has achieved sufficient stability to perform the measurement. Unless otherwise specified, perform all measurements under standard test conditions as follows:

3.1.1 Standard Temperature. Standard ambient temperature shall be between 20°C (68°F) and 30°C (86°F).

3.1.2 Standard Relative Humidity. Standard relative humidity shall be between 10 % and 85 %.

3.1.3 Standard Supply Voltage. For a device intended to operate from a nominal 12 V automotive system, the standard supply voltage shall be 13.6 V ± 0.1 V. For devices utilizing a battery pack, the standard supply voltage shall be a value specified by the manufacturer. A well-filtered electronic power supply capable of a voltage adjustment of ±25 % from the nominal should be used for laboratory testing and is recommended for other tests in place of the battery for safety and convenience. The standard supply voltage shall be applied to the input terminals of the dc supply cables (including all connectors and circuit protectors) *as furnished by the manufacturer.* Adjust the power supply to within 1 % of the specified standard voltage.

3.1.4 Standard Supply Input Current. The standard input current shall be the value measured while the radar device is operating and receiving a target signal.

3.1.5 Dual Antennas. For a device capable of operating with dual antennas, all tests shall be conducted using the front antenna; however, both antennas shall be connected, unless otherwise stated.

3.1.6 Special Instructions. Each time a test method requires that the radar device be connected to the simulator test range (hereinafter called "simulator"), the radar device must also be connected to the standard supply voltage source and properly aligned on the simulator.

Section 4 - Test Equipment

4.1 Test Equipment

The test equipment discussed in this section is limited to that equipment which is most critical in making the measurements discussed in this document. All other test equipment shall be of laboratory instrumentation quality. All test equipment, except the anechoic chamber, shall be provided with instruction manuals.

4.2 Audio Frequency Synthesizer

The audio frequency synthesizer, usually used for calibrating the tuning forks, shall have a frequency range of 200 Hz to 21 kHz, a resolution of at least 0.01 Hz, and a measurement uncertainty no greater than 1 part in 10^6.

4.3 Microphone

The microphone shall have a frequency range of 300 Hz to 10 kHz and shall be capable of coupling tuning fork tones into an amplifier or oscilloscope.

4.4 Environmental Chamber

The environmental chamber or chambers shall produce air temperatures that meet the requirements of §2.7.1 and §2.7.2 while shielding the test radar device from heating or cooling air currents blowing directly on it. The temperature of the radar device shall be measured with a thermometer separate from the sensor used to control the chamber air temperature and shall have an uncertainty no greater than ±1°C (±2°F). Likewise, humidity shall be measured with a hygrometer separate from the sensor used to control humidity and shall have an uncertainty no greater than ±2 %.

4.5 Anechoic Chamber

The rf anechoic chamber shall be shielded to exclude outside interference and shall be constructed to minimize internal microwave reflections from the chamber wall, floor and ceiling.

4.6 Microwave Frequency Counter

The microwave frequency counter shall be capable of measuring microwave frequencies from 10,500 MHz to 10,550 MHz, from 24,050 MHz to 24,250 MHz, and from 33,400 MHz to 36,000 MHz with an uncertainty no greater than 1 part in 10^7.

4.7 Field Strength Meter

The field strength meter shall have a probe with omnidirectional pickup characteristics and a 10 cm (4 in) diameter protective sphere, and shall be capable of measuring E-field power densities from 0.01 mW/cm^2 with an uncertainty no greater than ±1 dB.

4.8 Isotropic Probe

The isotropic probe shall have sensor antennas consisting of three orthogonal dipoles enclosed in a 10 cm (4 in) diameter protective sphere, a minimum detectable power density level of 0.01 mW/cm^2 over the frequency range of 10,000 MHz to 40,000 MHz and high resistance between the sensor and metering units.

4.9 Simulator Test Range

The simulator test range shall have the capability of mounting the radar device in an interference free environment and the means of generating modulation reflection signals as pseudo-Doppler audio signals. It shall be able to simultaneously produce simulated patrol, target, and fastest target vehicle speeds. The simulator test range shall consist of a mounting bench, three audio signal generators, an anechoic chamber, and a microwave single-side-band (SSB) modulator. The audio generators shall operate from 200 Hz to 21 kHz with frequency counters having an uncertainty of less than 1 part in 10^6 and shall have a calibrated output with an uncertainty no greater than ±2 dB. If integral frequency counters are not included, separate counters with the required accuracy shall be used. The SSB modulator shall be capable of generating SSB modulation for frequencies of 200 Hz to 21 kHz with independent (upper / lower) sideband selection for each of the three modulation sources, and test personnel shall be able to visually monitor the microwave signal level.

The SSB modulator shall provide a minimum of 15dB suppression of the unwanted sideband for modulation frequencies of 200 Hz to 21 kHz with all individual distortion products (modulation harmonics) at least 40 dB below the desired output for signals over a 40 dB dynamic range. The residual noise level produced by the modulator shall be 50 dB or more below maximum output, measured in a 100 Hz noise bandwidth for frequencies from 200 Hz to 21 kHz.

4.10 Line Impedance Stabilization Network (LISN)

The LISN, constructed as in figure 1 with shielded terminals, shall be capable of simultaneously interfacing with the radar device, the standard supply voltage source, and the interference injection generator.

4.11 Isolation Transformer

The isolation transformer shall have a 4:1 impedance ratio, a frequency range of 30 Hz to 16 kHz, and the secondary as connected shall be capable of handling the current flow without saturating the core.

4.12 Pulse Generator

The pulse generator shall be capable of producing 20 V p-p across a 50 Ω output impedance with rise and fall times of less than 1 μs and pulse repetition rates of 200 pps to 10,000 pps.

4.13 Sawtooth Wave Generator

The sawtooth wave generator shall be capable of producing 20 V p-p across a 50 Ω impedance. It shall also be capable of producing a sawtooth wave having a positive-going, leading-edge, fast rise-time wave of less than 1 μs over a frequency range of 200 Hz to 16 kHz.

4.14 FM Signal Generator

The FM signal generator shall be capable of producing 20 mW output power at frequencies from 30 MHz to 500 MHz and shall have an audio frequency modulation variable from 500 Hz to 5 kHz, a 50 Ω output impedance, a maximum standing wave ratio of 1.2 and a variable output level. It shall also have a deviation meter or calibrated control for determining the peak frequency deviation with an uncertainty no greater than 10 %.

4.15 AM Signal Generator

The AM signal generator shall cover the 25 MHz to 30 MHz frequency range, be capable of producing at least 20 mW output power and 99 % modulation of frequencies from 500 Hz to 5 kHz, and have a 50 Ω output impedance and a maximum standing wave ratio of 1.2. The generator should include a digital frequency counter having an uncertainty no greater than 1 part in 10^6 and an AM monitor or calibrated control for determining the AM percentage with an uncertainty no greater than 10 %. If an integral frequency counter is not included, a separate frequency counter having the required accuracy shall be provided.

4.16 Power Meter

The power meter shall have 50 Ω feed-through detectors for frequencies from 20 MHz to 500 MHz and the ability to handle powers up to 50 W with an uncertainty of 10 % or less.

4.17 Stopwatch

The stopwatch shall have a 0.1 μs resolution or better and a total time accumulation of at least 5 min.

4.18 Oscilloscope

The oscilloscope shall have a vertical input sensitivity (y-axis) of 10 mV/cm or better and a frequency response of at least 5 MHz. It shall also have a horizontal input (x-axis) having at least 20 kHz frequency response and a horizontal sweep-time base resolution of 100 μs/cm or better. It shall provide a reference voltage, having an uncertainty of 5 % or less, for calibrating the vertical input.

4.19 Slide Whistle

The slide whistle, a wind instrument with notched hollow tube and a variable displacement, shall be capable of producing audio frequency notes from 500 Hz to 3 kHz

Section 5 - Test Procedures

For the tests in this section, a directional radar shall be tested with directional mode enabled unless otherwise specified. The terms "approaching" and "receding" apply only to directional radar devices; ignore these terms for non-directional radars.

5.1 (Reserved)

5.2 (Reserved)

5.3 Labeling and Operation Tests

With the radar unit in hand, the test engineer shall review the instructions and the markings on the controls to verify that the controls operate as explained in the manual and consistently with their markings. The simulator or normal traffic may be used for input data. It is permitted for controls to have secondary functions beyond those marked; in these cases, there is a particular obligation for the manual to be written in plain English and to describe the use of the controls accurately.

While it is impossible for this test to be exhaustive, the test engineer shall look for:

(a) Controls that are unmarked, or marked in a misleading way,
(b) Modes of operation that are not documented,
(c) Misleading labels appearing in an alphanumeric display, and
(d) Lack of clarity in the manual, including possible typographical errors.

No misleading wording is permitted on the control panel and display, or in the manual. If an undocumented mode does turn up, such as an engineering test mode for instance, the resulting display shall be clearly different from the display in normal speed-measurement mode.

5.4 Tuning Fork Calibration Test

5.4.1 Equipment Set-up. Interconnect the test equipment as shown in figure 2 except that a frequency counter, microphone, and amplifier may be substituted for the audio frequency synthesizer and the oscilloscope.

5.4.2 Audio Frequency Synthesizer. If used, adjust the audio frequency synthesizer to approximately the tuning fork frequency. The tuning fork frequency is determined as follows:

5.4.2.1 *X-band*. By multiplying the labeled tuning fork speed when expressed in km/h by 19.5052 (mph by 31.3906).

5.4.2.2 *K-band*. By multiplying the labeled tuning fork speed when expressed in km/h by 44.7574 (mph by 72.0301).

5.4.2.3 *Ka-band*. The transmitted nominal microwave frequency shall be specified to determine the tuning fork frequency. The tuning fork frequency is calculated by multiplying the labeled tuning fork speed expressed in km/h by 1.853634

(mph by 2.983135) times the nominal microwave frequency expressed in gigahertz (i.e., frequency in megahertz divided by 1,000) of the particular radar device.

5.4.3 Tuning Fork Test. Activate the tuning fork by striking it on a nonmetallic object, wait 3 s, then hold it in front of the microphone while adjusting the synthesizer frequency to obtain a stationary, circular, Lissajous pattern on the oscilloscope.

5.4.4 Tuning Fork Frequency. Record the tuning fork frequency directly from the synthesizer dials.

5.4.5 Tuning Fork Speed. Divide the synthesizer frequency, or the frequency as measured by the counter, by the appropriate constant given above (§5.4.2) to obtain the speed corresponding to the measured frequency of the tuning fork.

5.5 Radar Device Tuning Fork Test

For the tests in this section, a directional radar device shall be placed in the non-directional mode as required by §2.5. For dual-antenna radar units, both antennas shall be connected during the tests. Only §5.5.1 shall be conducted for each of the antennas.

5.5.1 Stationary Mode

5.5.1.1 *Mode selection.* Place the radar device in the stationary mode.

5.5.1.2 *Antenna aim.* Orient the antenna so that no moving targets are located in the radar beam.

5.5.1.3 *Tuning fork test.* Activate the tuning fork by striking it on a nonmetallic object and hold it 2.5 cm to 10 cm (1 in to 4 in) in front of the antenna.

5.5.1.4 *Test results.* The radar device shall display the speed corresponding to the tuning fork frequency in the target speed display. For dual-antenna radar units, only the selected antenna shall display the speed corresponding to the tuning fork in the target speed display.

5.5.2 Opposite-Direction Moving Mode

5.5.2.1 *Mode selection.* Place the radar device in the opposite-direction moving mode.

5.5.2.2 *Antenna aim.* Orient the antenna so that no moving targets are located in the radar beam.

5.5.2.3 *Lower speed tuning fork test.* Activate the lower speed tuning fork by striking it on a nonmetallic object and hold it 2.5 cm to 10 cm (1 in to 4 in) in front of the antenna.

5.5.2.4 *Test results.* The radar device shall display the speed corresponding to the tuning fork frequency in the patrol speed display.

5.5.2.5 *Higher speed tuning fork test.* Activate the higher speed tuning fork by striking it on a nonmetallic object and hold it 2.5 cm to 10 cm (1 in to 4 in) in front of the antenna alongside the lower speed tuning fork.

5.5.2.6 *Test results.* The radar device shall display the speed corresponding to the lower tuning fork frequency in the patrol speed display and the speed corresponding to the difference in the speeds of the two tuning forks in the target speed display.

5.5.3 Same-direction Moving Mode

5.5.3.1 *Mode selection.* Place the radar device in the same-direction moving mode.

5.5.3.2 *Antenna aim.* Orient the antenna so that no moving targets are located in the radar beam.

5.5.3.3 *Faster-target vehicle mode*

5.5.3.3.1 *Mode selection.* Switch the radar device to the faster-target mode.

5.5.3.3.2 *Higher-Speed Tuning Fork Test.* Activate the higher-speed tuning fork by striking it on a non-metallic object and hold it 2.5 cm to 10 cm (1 in to 4 in) in front of the antenna.

5.5.3.3.3 *Test Results.* The radar device shall display the speed corresponding to the tuning fork frequency in the patrol speed display within the allowable tolerance.

5.5.3.3.4 *Lower-Speed Tuning Fork Test.* Activate the lower-speed tuning fork by striking it on a non-metallic object and place it alongside the higher-speed tuning fork.

5.5.3.3.5 *Test Results.* The speed corresponding to the higher-speed tuning fork frequency shall remain in the patrol speed display and the target speed display shall indicate the sum of the speeds of the two tuning forks within the allowable tolerance.

5.5.3.4 *Slower-target vehicle mode.* This test is not required for directional radar devices.

5.5.3.4.1 *Mode Selection.* Switch the radar device to the slower-target mode.

5.5.3.4.2 *Higher-Speed Tuning Fork Test.* Activate the higher-speed tuning fork by striking it on a non-metallic object and hold it 2.5 cm to 10 cm (1 in to 4 in) in front of the antenna.

5.5.3.4.3 *Test Results.* The radar device shall display the speed corresponding to the tuning fork frequency in the patrol speed display within the allowable tolerance.

5.5.3.4.4 *Lower-Speed Tuning Fork Test.* Activate the lower-speed tuning fork by striking it on a non-metallic object and place it alongside the higher-speed tuning fork.

5.5.3.4.5 *Test Results.* The speed corresponding to the high speed tuning fork frequency shall remain in the patrol speed display and the target speed display shall indicate the difference of the speed of the two tuning forks within the allowable tolerance.

5.5.4 Radar Devices Incorporating Fastest Option

5.5.4.1 *Mode Selection.* Place the radar device in the stationary mode.

5.5.4.2 *Antenna aim.* Orient the antenna so that no moving targets are located in the radar beam.

5.5.4.3 *Lower Speed Tuning Fork Test.* Activate the lower-speed tuning fork by striking it on a nonmetallic object and hold it 2.5 cm to 10 cm (1 in to 4 in) in front of the antenna.

5.5.4.4 *Test Results.* The radar device shall display the speed corresponding to the tuning fork frequency in the target display within the allowable tolerance.

5.5.4.5 *Higher-Speed Tuning Fork Test.* Activate the higher-speed tuning fork by striking it on a non-metallic object and hold it in front of the antenna at a sufficient distance that the higher-speed signal is weaker than the lower speed signal.

5.5.4.6 *Select Fastest Option.* Operate the fastest switch to select the fastest option.

5.5.4.7 *Test Results.* The fastest display shall indicate the speed of the higher-speed tuning fork. If the fastest speed appears in the target display on devices capable of displaying both readings simultaneously, the higher-speed signal is stronger than the lower-speed signal and the test shall be repeated.

5.6 Microwave Transmission Tests

5.6.1 Transmission Frequency and Frequency Stability Test

5.6.1.1 *Standard Supply Voltage.* Connect the test equipment as shown in figure 3. Position the pickup horn antenna in the radar beam a sufficient distance away from the radar device to prevent over-driving the microwave frequency counter. Adjust the standard supply voltage to its nominal value and record the microwave frequency.

5.6.1.2 *Low Voltage.* Reduce the supply voltage to the low level as established in §2.6.1, allow it to stabilize for 2 min, and repeat the above procedure.

5.6.1.3 *High Voltage.* Repeat §5.6.1.2 with the supply voltage set to the high level as established in §2.6.1.

5.6.2 Reserved.

5.6.3 Radiated Output Power Stability Test. Position the radar device on a vertical test stand in the anechoic chamber with the antenna pointed upward, and connect the test equipment as shown in figure 5. Mount the isotropic probe of the field intensity meter 50 cm to 100 cm (20 in to 40 in) from the radar antenna in the longitudinal axis of the radar beam. Adjust either the radar device or the probe horizontally to position the probe in the center of the principal axis of the beam (maximum probe reading). Record the distance between the antenna aperture and the isotropic probe, adjust the standard supply voltage to its nominal value and record the field strength of the microwave output signal. Vary the supply voltage over the supply voltage tolerance limits of §2.6.1.

5.6.4 Antenna Horizontal Beamwidth Tests. Use either the following test §5.6.4.1 or §5.6.4.2, as appropriate:

5.6.4.1 *Antenna Horizontal Beamwidth Test.* Position the radar device on a vertical test stand in the anechoic chamber, with the antenna pointed upwards, and connect the test equipment as shown in figure 5. Mount the isotropic probe of the field

intensity meter 50 cm to 100 cm (20 in to 40 in) above the radar antenna. Energize the radar device using the standard supply voltage and allow it to stabilize for 2 min. Adjust the position of the radar device on the test stand until the probe is in the center of the antenna beam (maximum power), then adjust the height of the probe for a full scale or reference level on a sensitive scale of the field strength meter, maintaining the probe in the antenna far-field region. Record the field intensity and the distance between the antenna and the probe. Using caution not to accidentally rotate it, move the radar device to the right along a line parallel to the horizontal axis of the radar beam until half-power is indicated on the meter and carefully mark the position of the radar device. Move the radar device to the left of the probe along the same line until half-power is again indicated on the meter. Mark this point and measure the distance between the half-power points.

For a linearly polarized antenna, calculate the half-power beamwidth, A, using the following equation to correct for the change in radial distance.

$$A = 2F \text{ Arctan } [D/(2R)]$$

where A is the angular half-power beamwidth, F is a factor to correct for the change in radius (from the graphed curve, fig. 6), R is the radial distance from the front of the antenna to the point at which the maximum power density, P_0, was measured and D is the average perpendicular distance between the half-power points at which the power density, P_1, is one-half of P_0.

For a circularly polarized antenna, move the radar device along a line parallel to the vertical axis of the radar device, measure the distance between these half-power points. Average the distance between the horizontal and vertical half-power readings and calculate the half-power beamwidth using the above equation to correct for any change in radial distance.

5.6.4.2 *Antenna Horizontal Beamwidth test (alternate method for circularly polarized radar devices only).* Position the radar device on a turntable in the anechoic chamber, energize it using the standard supply voltage and allow it to stabilize for 2 min. Position a pickup horn antenna on the maximum power axis of the radar device antenna. Locate the horn in the far-field region at a distance close enough to indicate full scale or a reference level on a sensitive scale of the power meter. Record the protractor angle indication on the radar device mounting turntable. Rotate the turntable with the radar device until the power meter indicates one-half the power read at the center of the beam, record the turntable angle and then rotate the turntable back through center, continuing until the power meter again indicates one-half the power read at the center and record the turntable angle. The change in the angle readings of the turntable between the two half-power points shall be taken as the antenna beamwidth.

5.6.5 Antenna Near-Field Power Density Test. Connect the radar device to the test equipment as shown in figure 7. Being careful not to vary the distance from the antenna, use the isotropic probe to search for the maximum signal strength in the plane 5 cm (2 in) from the antenna aperture or lens face of the antenna and perpendicular to the longitudinal axis of the radar beam. Move the probe to obtain the maximum reading and record it. For a battery powered radar device designed to accept an optional 12 V

automotive adapter, repeat this test utilizing the adapter and a standard supply voltage of 13.6 V.

5.6.6 Standby/Operate Switch. When a radar device is so equipped, place the hand-held radar device in the stationary mode and connect as in figure 7 to the standard supply voltage and energize it. Allow the radar device to stabilize for 2 min. Use the isotropic probe and field intensity meter to verify that no rf power is transmitted unless the standby/operate switch is held depressed. Verify that transmission commences without undue delay when the switch is depressed, and ceases when the switch is released. Check that the standby/operate switch cannot be locked in the transmit position.

5.7 Environmental Tests

5.7.1 Operational Temperature Test. Place the radar device, with the power off, in the environmental chamber and adjust the chamber to the required low temperature ±2°C (±3.6°F). Allow the radar device to reach thermal equilibrium and maintain it at this temperature for 30 min. Using protective gloves, remove the radar device from the environmental chamber, place it in the anechoic chamber and connect it to the standard supply voltage. After energizing, wait 2 min before performing any measurements. The radar device shall meet the requirements of §2.7.1 within 15 min of operation. Repeat the above procedure at the required high temperature ±2°C (±3.6°F).

5.7.2 Operational Humidity Test. Place the radar device, with the power off, in the environmental chamber. Adjust the relative humidity to a minimum of 90 % at 37°C (99°F) and maintain the radar device at these conditions for at least 8 h. Remove the radar device from the chamber, place it in the anechoic chamber and connect it to the standard supply voltage. After energizing, wait 2 min before performing any measurements. The radar device shall meet the requirements of §2.7.2 within 15 min of operation.

5.8 Low Supply Voltage Indicator Test

Connect the radar device to the standard supply voltage as shown in figure 4 (cf. §3.1.3) and energize it in the stationary mode. Allow the radar device to stabilize for 2 min, then conduct the appropriate radar device tuning fork test (§5.5) and measure the radar speed generated by the tuning fork frequency. Continue to measure the radar speed and decrease the supply voltage at the rate of approximately 0.2 V/s until the low-voltage alert is activated. Record the supply-voltage level. Verify that no erroneous speed reading is present. Increase the supply voltage until the low-voltage indicator is deactivated, and again conduct the appropriate radar device tuning fork test to verify that the radar device displays the same speed reading as at standard supply voltage.

Also, for battery powered radar devices designed to accept a 12 V automotive adapter, verify that when using this adapter the radar device works properly down to its low-voltage alert.

5.9 Doppler Audio Tests

Each time a test method requires that the radar device be connected to the simulator, the radar device shall also be connected to the standard supply voltage source and properly aligned on the simulator. Refer to figure 8 for a block diagram of this measurement setup. The following procedures shall be followed:

5.9.1 Audio Output Test. Connect the radar device to the simulator, energize it in the stationary mode and disable the squelch function. Establish a simulated target, and then vary the target speed to verify that the Doppler audio signal is correlated with the target speed. In a single-target situation, stationary mode, the Doppler audio should be a single clear tone. Move a metal plate in the radar beam without interrupting the signal beam and ascertain that the interference motion from the plate is heard in the Doppler audio signal. For moving radar devices, switch to the moving mode of operation and use the simulator to establish a simulated moving mode situation. Vary the target-speed control and verify that the simulated target Doppler audio signal is correlated with the target speed, whether the patrol Doppler audio signal is present or not.

5.9.2 Volume Control Test. Vary the audio volume adjustment control.

5.9.3 Audio Squelch Test. Connect the radar device to the simulator and energize it in the stationary mode with no target present. Verify that the audio output is squelched.

5.9.4 Squelch Override Test. Disable the squelch function and move a metal plate within the radar beam and verify that this motion is heard in the Doppler audio signal.

5.9.5 Audio Track-Through-Lock Test

5.9.5.1 *Stationary Mode*. Connect the radar device to the simulator and energize it in the stationary mode with the Doppler audio signal squelched. Establish a simulated target, actuate the speed lock switch and verify that the Doppler audio signal continues uninterrupted.

5.9.5.1.1 *Increased Target Speed*. Increase the simulated target speed and verify that the Doppler audio signal is correlated with the target speed.

5.9.5.1.2 *Decreased Target Speed*. Decrease the simulated target speed and verify that the Doppler audio signal is correlated with the target speed.

5.9.5.2 *Moving Mode*. For moving radar devices switch to the moving mode of operation, establish a simulated fixed patrol speed and a variable target speed. Actuate the speed-lock switch and verify that the Doppler audio signal continues uninterrupted.

5.9.5.2.1 *Increased Target Speed*. Increase the simulated target speed and verify that the Doppler audio signal is correlated with the target speed.

5.9.5.2.2 *Decreased Target Speed*. Decrease the simulated target speed and verify that the Doppler audio signal is correlated with the target speed.

5.10 Speed Monitor Alert Test

Verify that the radar device does not have a speed-monitor alert capability.

5.11 Power Surge Test

Conduct the following test on any radar device having a standby capability.
Adjust all range sensitivity controls and audio volume controls to maximum for these tests.

5.11.1 Stationary Mode

5.11.1.1 *Establish Target Speed.* Connect the radar device to the simulator and establish a simulated target of 80 km/h (50 mph).

5.11.1.2 *Standby Mode.* Switch the device to standby mode.

5.11.1.3 *Operational Mode.* Turn the device from standby to on and verify that there are no erroneous readings.

5.11.1.4 *Test Repetition.* Repeat §5.11.1.1, §5.11.1.2, and §5.11.1.3 three times.

5.11.2 Moving Mode. If applicable, switch to the moving mode.

5.11.2.1 *Establish Target Speed.* Connect the radar device to the simulator and establish a simulated target of 80 km/h (50 mph).

5.11.2.2 *Standby Mode.* Switch the device to standby mode.

5.11.2.3 *Operational Mode.* Turn the device from standby to on and verify that there are no erroneous readings.

5.11.2.4 *Test Repetition.* Repeat §5.11.2.1, §5.11.2.2, and §5.11.2.3 three times.

5.12 Speed Display Tests

Each time a test method requires that the radar device be connected to the simulator, the radar device shall also be connected to the standard supply voltage source and properly aligned on the simulator. Refer to figure 8 for a block diagram of this measurement setup. Activate the radar device in the stationary mode, determine the minimum target signal level necessary to establish a simulated 80 km/h (50 mph) target speed, then increase the simulated target-signal level by 3 dB (1.5 dB if using a microwave attenuator). Turn the simulated target signal off and proceed with each of the tests.

When moving mode signals are needed, activate the radar device in the appropriate moving mode, determine the minimum patrol signal level necessary to establish a simulated 88 km/h (55 mph) patrol speed, then increase the simulated patrol-signal level by 10 dB (5 dB if using a microwave attenuator). Turn the simulated patrol signal off and proceed with each of the tests.

5.12.1 Display Readability Test. Establish a simulated target speed and verify that the display is clearly readable when used as intended by the manufacturer.

5.12.2 Display Speed-Lock Tests

5.12.2.1 These tests may be performed in conjunction with the display clear test [§5.12.3] for convenience. Connect the radar device to the simulator and establish a simulated target. Verify that the radar device has no automatic lock capability. Place the radar device in the stationary mode and activate the speed-lock switch to retain the target-speed reading. Increase the target-speed, then discontinue the simulated target and verify that the target-speed display has retained the correct speed reading.

5.12.2.2 Clear the radar device and again establish a simulated target, but do not activate the speed-lock switch. Discontinue the simulated target, wait for the display to blank, and then activate the speed-lock switch. Verify that the target-speed display remains blank.

5.12.2.3 For moving radar devices establish both a simulated target-speed and a simulated patrol-speed. Proceed as above; however, both the target-speed display and the patrol-speed display shall be observed, and neither can be inhibited except after lock.

5.12.3 Display Clear Test

5.12.3.1 Connect the radar device to the simulator, energize it in the stationary mode, establish a simulated target, and then turn off the simulated signal. Activate any one of the control switches (on, off, standby, test, etc.) on the radar device except the speed-lock switch and verify that the previous target speed reading has not been preserved. Repeat for each control switch on the radar device. For moving radar devices, establish a simulated or target speed and a simulated patrol speed. Switch to the opposite-direction moving mode and repeat these procedures. Repeat these procedures for same-direction moving mode, if appropriate.

5.12.3.2 With the radar device still connected to the simulator, again establish a simulated target speed. Lock in this speed reading using the speed lock switch. Activate any one of the control switches on the radar device except standby and test, and verify that the previous speed reading has not been preserved. Repeat for each control switch on the radar device.

5.12.4 Internal Circuit Test. Activate the radar device and perform the internal circuit test in accordance with the instructions of the manufacturer. Verify that only correct readings are displayed, and that all readings are cleared automatically when the test is completed. Repeat the internal circuit test a second time and actuate the speed-lock switch while readings are displayed. Verify that these readings are not retained by the display.

5.12.5 Speed Display Transfer Test. Connect the radar device to the simulator, set it to the moving mode and establish an opposite-direction moving mode simulated patrol-speed and target speed. Activate the speed-lock switch and discontinue the simulated signals. Using each of the available controls, attempt to transfer the patrol-speed reading to the target-speed display. Repeat for same-direction moving mode (if appropriate).

5.12.6 Signal Processing Channel Sensitivity

5.12.6.1 Stationary Mode Target Channel

5.12.6.1.1 *Channel Sensitivity Test*. Connect the radar device to the simulator and establish a 56 km/h (35 mph) simulated upper sideband target signal. Do not move the radar device for the remainder of this test. Place the radar device in the stationary approaching target mode, increase the target signal by adjusting the generator output or audio attenuator and record the minimum signal level needed to acquire the target. Repeat for target speeds of 32 km/h (20 mph) or the lowest target speed specified by the manufacturer, whichever is lower, to 144 km/h (90 mph) at 16 km/h (10 mph) increments. Continue this test in 16 km/h (10 mph) increments up to the maximum target speed specified by the manufacturer.

5.12.6.2 *Moving Mode Opposite-Direction Target Channel*

5.12.6.2.1 *Channel Sensitivity Tests*. For moving radar devices, place the radar device in the opposite-direction moving mode, establish a 40 km/h (25 mph) simulated patrol speed (upper sideband for a front antenna or lower sideband for a rear antenna) and then increase this signal level by 10 dB (5 dB if using the microwave attenuator). Establish a 64 km/h (40 mph) simulated target speed (upper sideband for a front antenna or lower sideband for a rear antenna), acquire it and record the minimum signal level to reacquire the target. Repeat and record the minimum signal level for target speeds of 96 km/h to 144 km/h (60 mph to 90 mph) at 16 km/h (10 mph) increments, or from 96 km/h (60 mph) to the highest target speed the manufacturer states the device will operate properly, whichever is higher. Repeat the procedure for a simulated patrol speed of 80 km/h (50 mph) and target speeds of 96 km/h to 144 km/h (60 mph to 90 mph) at 16 km/h (10 mph) increments. Continue this test at 16 km/h (10 mph) increments up to the maximum target speed specified by the manufacturer.

5.12.6.3 *Moving Mode Same-Direction Target Channel*

5.12.6.3.1 *Channel Sensitivity Tests*

Note: Directional radar devices are not required to provide a faster target /slower target selection control, but may instead automatically switch to the correct calculation for the signal combinations specified below.

For moving radar devices having same-direction mode capability, place the radar device in the slower target, same-direction moving mode, establish a 64 km/h (40 mph) simulated patrol speed (upper sideband for a front antenna or lower sideband for a rear antenna), then increase the patrol signal level by 10 dB (5 dB if using the microwave attenuator). Establish an 8 km/h (5 mph) simulated closing-speed signal (upper sideband for a front antenna or lower sideband for a rear antenna) and determine the minimum closing-speed channel signal level needed to acquire the 56 km/h (35 mph) target. Repeat the procedure and record reacquisition signal levels for closing speeds at increments of 8 km/h (5 mph) up to 40 km/h (25 mph). Next, place the radar device in the faster target mode, establish a 64 km/h (40 mph) simulated patrol speed (upper sideband for a front antenna or lower sideband for a rear antenna), then increase the patrol signal level by 10 dB (5 dB if using the microwave attenuator). Establish an 8 km/h (5 mph) simulated closing-speed signal (lower sideband for a front antenna or upper sideband for a rear antenna) and determine the minimum closing-speed channel signal level needed to acquire the 72 km/h (45 mph) target. Repeat the procedure and record reacquisition signal levels for target speeds of 72 km/h to 104 km/h (45 mph to

65 mph) at 8 km/h (5 mph) increments.

Reset the radar device to the slower target same-direction mode, and adjust the simulated patrol speed (upper sideband for a front antenna or lower sideband for a rear antenna) to 88 km/h (55 mph) adjusting the signal level as before. Repeat the above procedures for closing-speeds of 8 km/h to 40 km/h (5 mph to 25 mph) in 8 km/h (5 mph) increments, recording target channel sensitivities for acquiring target speeds between 48 km/h to 80 km/h (30 mph to 50 mph). Repeat the procedure with the radar device and simulator in the faster target mode, recording the minimum signal acquisition levels for target speeds of 96 km/h to 128 km/h (60 mph to 80 mph) in 8 km/h (5 mph) increments.

5.12.6.4 *Radar devices with fastest option capability*

5.12.6.4.1 *Fastest Option Stationary Mode*. Connect the radar device to the simulator. Place the radar device in the stationary approaching mode. Establish a simulated upper sideband fastest target speed of 64 km/h (40 mph) on the fastest speed generator. Increase the fastest target signal by 5 dB (2 dB if using a microwave attenuator). Remove the simulated fastest target speed but do not adjust the signal level. Establish a simulated upper sideband target speed of 40 km/h (25 mph) on the target speed generator. Increase its signal level by 10 dB (5 dB if using a microwave attenuator). Reapply the 64 km/h (40 mph) simulated fastest target signal. The radar-device target display shall indicate a target speed of 40 km/h (25 mph). Operate the fastest switch to activate the fastest option. The radar-device fastest display shall indicate a target speed of 64 km/h (40 mph) within one 1 s. When the fastest switch is used to deactivate the fastest option, the radar device target display shall indicate a target speed of 40 km/h (25 mph) within 2 s.

5.12.6.4.2 *Fastest Option Moving Mode*. Connect the radar device to the simulator. Place the radar device in the opposite-direction moving mode. Establish a simulated (upper sideband for a front antenna or lower sideband for a rear antenna) patrol speed of 80 km/h (50 mph). Increase the patrol speed signal level by 15 dB (7 dB if using a microwave attenuator) or the largest signal that does not cause the modulator to be over-driven, whichever is less. Establish a simulated (upper sideband for a front antenna or lower sideband for a rear antenna) fastest target speed of 136 km/h (85 mph) on the fastest target speed generator. Increase the fastest target speed signal level by 5 dB. Remove the simulated fastest target speed but do not adjust the signal level. Establish a simulated (upper sideband for a front antenna or lower sideband for a rear antenna) target speed of 64 km/h (40 mph) on the target speed generator. Increase this target speed signal level by 10 dB. Reapply the simulated fastest target speed of 136 km/h (85 mph). The radar device target display shall indicate a target speed of 64 km/h (40 mph). Operate the fastest switch to activate the fastest option. The radar device fastest display shall indicate a target speed of 136 km/h (85 mph) within 1 s. When the fastest switch is used to deactivate the fastest option, the radar-device target display shall indicate a target speed of 64 km/h (40 mph) within 2 s.

5.12.6.5 *Directional Discrimination Tests*. For a directional radar device, perform the following additional tests:

5.12.6.5.1 *Stationary Mode*. For stationary-mode directional radar devices, perform the following tests.

5.12.6.5.1.1. Establish a 96 km/h (60 mph) simulated upper sideband

target speed. Place the radar device in the stationary approaching target mode, increase the target signal by adjusting the generator output or audio attenuator until the target is detected and then increase the target signal by 10 db (5 dB if using the microwave attenuator). Switch the radar device to stationary receding target mode and verify that the target speed is not displayed by the radar device.

5.12.6.5.1.2. Establish a 96 km/h (60 mph) simulated lower sideband target speed. Place the radar device in the stationary receding target mode, increase the target signal by adjusting the generator output or audio attenuator until the target is detected and then increase the target signal by 10 db (5 dB if using the microwave attenuator). Switch the radar device to stationary approaching target mode and verify that the target speed is not displayed by the radar device.

5.12.6.5.2 *Moving Mode*. For moving-mode directional radar devices, perform the following tests, when applicable.

5.12.6.5.2.1 Moving Mode, Opposite Direction. Place the radar device in the opposite-direction mode. Establish a 40 km/h (25 mph) simulated patrol speed (upper sideband for a front antenna or lower sideband for a rear antenna) and then increase this signal level by 10 dB (5 dB if using the microwave attenuator). Establish a 144 km/h (90 mph) simulated closing speed (lower sideband for a front antenna or upper sideband for a rear antenna) and verify that the radar will not acquire the 104 km/h (65 mph) target.

5.12.7 Target Channel Low-and High-Speed Display Tests. To establish initial signal levels and avoid over-driving the simulator circuitry diodes, follow the guidelines set forth within the introductory paragraphs to §5.12.

5.12.7.1 *Stationary*. Connect the radar device to the simulator.

5.12.7.1.1 *Low Speed*. With the radar device in off or standby, establish a simulated upper sideband target speed at the required low speed or the slowest speed specified by the manufacturer, whichever is lower. Switch the radar device to the stationary approaching mode and verify that it will acquire this target and measure its speed.

5.12.7.1.2 *High Speed*. With the radar device in off or standby, establish a simulated upper sideband target speed at the required high speed or the highest speed specified by the manufacturer, whichever is higher. Switch the radar device to the stationary mode and verify that it will acquire this target and measure its speed.

5.12.7.2 *Opposite-direction moving mode*

5.12.7.2.1 *Low Speed*. Establish a simulated (upper sideband for a front antenna or lower sideband for a rear antenna) patrol speed of 32 km/h (20 mph) or the lowest patrol speed specified by the manufacturer, whichever is lower. Switch the radar device to opposite-direction moving mode, and increase the patrol speed signal by 10 dB above the acquisition level. Establish a simulated target speed (upper sideband for a front antenna or lower sideband for a rear antenna) at the required low target speed or the lowest target speed specified by the manufacturer, whichever is lower. Verify that the radar device will acquire this target and measure its speed. Always maintain the closing-speed signal level below the patrol-speed signal level and avoid over-driving the simulator with target speed and patrol-speed signals.

5.12.7.2.2 *High Speed*. For moving radar devices, with a patrol speed

(upper sideband for a front antenna or lower sideband for a rear antenna) of 112 km/h (70 mph) and a simulated target speed (upper sideband for a front antenna or lower sideband for a rear antenna) of 160 km/h (100 mph), verify that the target signal processing channel will process and display the correct target- speed readings. Always maintain the closing speed signal level below the patrol- speed signal level and avoid over-driving the simulator with target- and patrol-speed signals. For K-band moving radar devices, change the closing speed to 338 km/h (210 mph), with a maximum patrol speed of 88 km/h (55 mph). Then slowly increase the closing speed to 362 km/h (225 mph.) Verify that the radar device will not process and display any target-speed reading over this range of closing speeds. If simulated patrol speed and simulated closing speed are harmonics of each other, decrease patrol speed by 3.2 km/h (2 mph).

5.12.7.3 *Same-direction moving mode*

5.12.7.3.1 Low Speed. Set the radar device to slower-target same-direction moving mode and establish as in §5.12.6.3.1 the lowest patrol speed specified by the manufacturer. Adjust the closing-speed signal to obtain a simulated target speed of 32 km/h (20 mph) or the lowest target speed specified by the manufacturer, whichever is lower. Verify that the radar device will acquire this target and measure its speed.

5.12.7.3.2 High Speed. Set the radar device to faster target same-direction moving mode and establish as in §5.12.6.3.1 a simulated patrol speed of 112 km/h (70 mph) or the highest speed specified by the manufacturer for same-direction operation, whichever is higher. Adjust the closing-speed signal to obtain a simulated target speed of 160 km/h (100 mph) or the highest target speed specified by the manufacturer, whichever is higher. Verify that the radar device will acquire this target and measure its speed.

5.12.8 Patrol Channel Speed Display. To establish initial signal levels and avoid over-driving the simulator circuitry diodes, follow the guidelines set forth within the introductory paragraphs to §5.12.

5.12.8.1 *Low-and High-Speed Tests*. Connect the radar device to the simulator. With the radar device in off or standby, establish a simulated patrol-speed signal (upper sideband for a front antenna or lower sideband for a rear antenna) at the required low speed. Switch the radar device to the opposite-direction moving mode. Verify that the radar device will acquire and correctly measure patrol speeds down to the required low speed. With the radar device still in the opposite-direction moving mode, establish a simulated patrol speed (upper sideband for a front antenna or lower sideband for a rear antenna) of 112 km/h (70 mph) and verify that the radar device will acquire and correctly measure patrol speeds up to the required high speed.

For moving radar devices having same-direction capability, establish a simulated patrol speed (upper sideband for a front antenna or lower sideband for a rear antenna) of 32 km/h (20 mph) or the lowest patrol speed specified by the manufacturer for same-direction operation, whichever is lower. Switch the radar device to same-direction slower-target moving mode. Verify that the radar device will acquire and correctly measure patrol speeds down to the required low speed.

Establish a simulated patrol speed (upper sideband for a front antenna or lower sideband for a rear antenna) of 112 km/h (70 mph) or the highest patrol speed specified

by the manufacturer for same-direction operation, whichever is higher. Switch the radar device to same-direction faster-target moving mode. Verify that the radar device will acquire and correctly measure patrol speeds up to the required high speed.

5.12.8.2 *Patrol Vehicle Speed Change Test*

5.12.8.2.1 *Increase Speed*. Connect the radar device to the simulator and establish a patrol speed (upper sideband for a front antenna or lower sideband for a rear antenna) of 32 km/h (20 mph). Place the radar device in the opposite-direction moving mode and display the correct patrol speed. Increase the simulator patrol speed at a rate of 4.8 km/h per second (3 mph per second) for 5 s and verify that the patrol-speed display reading agrees with the simulated patrol speed during this 5 s period. Repeat this procedure for initial patrol speeds of 48 km/h and 64 km/h (30 mph and 40 mph). Repeat for same-direction moving mode (if appropriate).

5.12.8.2.2 *Decrease Speed*. With the radar device still connected to the simulator, establish a patrol speed (upper sideband for a front antenna or lower sideband for a rear antenna) of 88 km/h (55 mph). Place the radar device in the opposite-direction moving mode and display the correct patrol speed. Decrease the simulator patrol speed at a rate of 4.8 km/h per second (3 mph per second) for 5 s and verify that the patrol-speed reading agrees with the simulated patrol speed during this 5 s period. Repeat this procedure for an initial patrol speed of 64 km/h (40 mph).

5.12.9 *Auxiliary Display Tests*. Connect the radar device, together with the auxiliary display module, to the simulator and conduct the display-speed lock test (§5.12.2) and the display-clear test (§5.12.3). Verify that the auxiliary display module meets the requirements specified for the target channel (§2.12.7) and patrol channel (§2.12.8) test. Verify that remote display module, if present, shall blank all displays or display current radar information when reconnected to the radar device.

5.12.10 Same-Direction Moving Mode Speed Computation Indicator Test. For non-directional radar devices having a same-direction moving-mode capability, verify that the device has a visual indicator designating whether the target speed is being computed on the basis of a target vehicle traveling faster or slower than a patrol vehicle.

5.12.11 Fastest Option Indicator Test. Unless a dedicated display is used for the fastest display, verify that the readout unit has a visual indicator designating that the target speed being displayed is associated with a faster target within the radar beam.

5.13 Conducted Electromagnetic Interference Tests

If the unit under test is intended to be connected to an external source of power, then connect the radar device to the simulator and to the other test equipment as shown in figure 10 (cf. §3.1.3). Activate the radar device in the stationary approaching mode, determine the minimum signal level necessary to establish a simulated upper sideband 80 km/h (50 mph) target, then increase the simulated signal level by 3 dB (1.5 dB if using a microwave attenuator). Turn the simulated signal off and proceed with each of the tests in §5.13.1 through §5.13.4.

For radar units with dual (2) antenna capability, both antennas shall be installed, and the front antenna shall be selected.

For a battery-powered radar device designed to accept an optional 12 V automotive adapter, repeat the electromagnetic interference tests utilizing this adapter and a standard supply voltage of 13.6 V. Connect the injection isolation transformer or LISN in series with the standard supply and automotive adapter for these interference tests.

5.13.1 Vehicle Alternator Interference Test

5.13.1.1 With the pulse generator connected such that the pulse signals are impressed on the radar device power line, set the generator output to 1 V p-p or 7.5 % of the standard supply voltage in use (whichever is lower), as measured using the oscilloscope, at a pulse repetition rate of 200 pps with a pulse width of 10 μs to 20 μs. With the radar device still in the stationary mode, establish a simulated target of 64 km/h (40 mph) and slowly vary the generator frequency from 200 pps to 10,000 pps and back to 200 pps while maintaining 1 V p-p as measured on the oscilloscope throughout the entire test.

5.13.1.2 For moving radar devices, switch to the opposite-direction moving mode, turn off the pulse generator, and determine the minimum signal level (upper sideband for a front antenna or lower sideband for a rear antenna) necessary to establish a patrol speed of 80 km/h (50 mph). Then increase this level by 10 dB (5 dB if using a microwave attenuator). Establish an upper sideband target speed of 96 km/h (60 mph) (3 dB above a minimum target signal), reset the pulse generator to 1 V p-p or 7.5 % of the standard supply voltage in use (whichever is lower) and repeat the procedure in §5.13.1.1. Verify that no erroneous readings appear at any time. Repeat for same-direction moving mode (if appropriate).

5.13.1.3 Repeat §5.13.1.1 and §5.13.1.2 above using a constant pulse repetition rate of 1,500 pps while slowly varying the pulse amplitude from 0 to 1 V p-p or 7.5 % of the standard supply voltage in use (whichever is lower) and back to 0 V, as measured using the oscilloscope. Repeat §5.13.1.1 and §5.13.1.2 using a constant 3,100 pps.

5.13.2 Vehicle Ignition, Air Conditioner/Heater Motor and Windshield Wiper Motor. Disconnect the pulse generator (cf. fig. 10) and replace it with the sawtooth wave generator as shown in figure 11 (cf. §3.1.3), such that sawtooth wave signals are impressed on the radar device power line. Place the radar device in the stationary approaching mode, establish a simulated upper sideband target of 64 km/h (40 mph), and then increase the simulated signal level by 3 dB above a minimum target signal.

Set the generator output to 1 V p-p or 7.5 % of the standard supply voltage (whichever is lower) as measured using the oscilloscope at a frequency of 200 Hz. Slowly vary the generator frequency from 200 Hz to 10 kHz and back to 200 Hz while maintaining 1 V p-p as measured on the oscilloscope throughout the entire test. Verify that no erroneous readings appear at any time.

For Ka-band radar devices, repeat this procedure while slowly varying the sawtooth generator frequency from 15 kHz to 16 kHz and back to 15 kHz, verifying that no erroneous readings appear. Pay particular attention to 15.75 kHz.

For moving radar devices, switch to the opposite-direction moving mode, turn off the sawtooth wave generator and establish a patrol speed (upper sideband for a front antenna or lower sideband for a rear antenna) of 80 km/h (50 mph) (10 dB above minimum patrol signal) and a target speed (upper sideband for a front antenna or lower sideband for a rear antenna) of 96 km/h (60 mph). Then increase the simulated signal level by 3 dB, reset the sawtooth wave generator to 1 V p-p or 7.5 % of the standard supply voltage (whichever is lower) as measured using the oscilloscope and repeat the above procedures. Verify that no erroneous readings appear at any time. Repeat for same-direction moving mode (if appropriate). For Ka-band moving radar devices repeat procedures for frequencies from 15 kHz to 16 kHz and back to 15 kHz.

5.13.3 Police FM Transceiver Interference Test

5.13.3.1 Connect the FM signal generator to the line impedance stabilization network, refer to figure 12 (cf. §3.1.3), such that the rf signals are impressed on the radar device power line. Place the radar device in the stationary approaching mode, establish an upper sideband simulated target of 64 km/h (40 mph), then increase the simulated signal level by 3 dB, set the generator frequency deviation to 5 kHz. Set the generator to a frequency of 160 MHz with an output of 10 mW, as measured by the power meter, with no more than 1 mW reflected power. Slowly vary the modulation frequency from 200 Hz to 10 kHz and back to 200 Hz. Verify that no erroneous readings appear at any time.

5.13.3.2 For moving radar devices, switch to the opposite-direction moving mode, turn off the FM signal generator, establish a patrol speed (upper sideband for a front antenna or lower sideband for a rear antenna) of 80 km/h (50 mph) (10 dB above minimum patrol signal) and a target speed (upper sideband for a front antenna or lower sideband for a rear antenna) of 96 km/h (60 mph). Then increase the simulated signal level by 3 dB, turn on the FM signal generator, and repeat the above procedure. Verify that no erroneous readings appear at any time. Repeat for same-direction moving mode (if appropriate).

5.13.3.3 Repeat §5.13.3.1 and §5.13.3.2 above using a constant modulation frequency of 1.5 kHz while slowly varying the FM signal generator output from 0 mW to 10 mW and back to 0 mW. Repeat §5.13.3.1 and §5.13.3.2 above using a constant modulation frequency of 3.1 kHz.

5.13.3.4 Repeat the entire test for frequencies of 40 MHz and 460 MHz.

5.13.4 Citizens Band (CB) AM Transceiver Interference Tests

5.13.4.1 Connect the AM signal generator to the line impedance stabilization network, refer to figure 12 (cf. §3.1.3), such that the rf signals are impressed on the radar device power line. Place the radar device in the stationary approaching mode, establish a simulated upper sideband target of 64 km/h (40 mph), and then increase the simulated signal level by 3 dB. Set the generator to a frequency of 27 MHz with an output of 5 mW, as measured by the power meter, with no more than 1 mW reflected power, and adjust the generator modulation to 99 %. Slowly vary the modulation frequency from 200 Hz to 10 kHz and back to 200 Hz. Verify that no erroneous readings appear at any time.

5.13.4.2 For moving radar devices, switch to the opposite-direction moving mode, turn off the AM signal generator, establish a patrol speed (upper sideband for a front antenna or lower sideband for a rear antenna) of 80 km/h (50 mph) (10 dB above minimum patrol signal) and a target speed (upper sideband for a front antenna or lower sideband for a rear antenna) of 96 km/h (60 mph). Then increase the simulated signal level by 3 dB, turn on the AM signal generator, and repeat the above procedure. Verify that no erroneous readings appear at any time. Repeat for same-direction moving mode (if appropriate).

5.13.4.3 Repeat §5.13.4.1 and §5.13.4.2 using a constant modulation frequency of 1.5 kHz while slowly varying the AM signal generator output from 0 mW to 5 mW and back to 0 mW. Repeat §5.13.4.1 and §5.13.4.2 using a constant modulation frequency of 3.1 kHz.

5.14 Radiated Electromagnetic Interference Tests

Install the radar device in the patrol vehicle in accordance with the manufacturer's instructions, using extreme care in positioning the antenna. The patrol vehicle shall be of the type normally used for law enforcement purposes, with heavy duty components. It shall have at least one standard police FM transceiver and an antenna installed in accordance with the instructions provided by the transceiver manufacturer. This test shall be conducted in an environment free of extraneous moving targets such as large ventilation fans.

For radar units with dual (2) antenna capability, both antennas shall be installed, and the front antenna shall be selected.

For a battery powered radar device designed to also accept optional 12 V automotive adapter, perform the police FM transceiver interference test (§5.14.1) utilizing the battery pack and then repeat the test utilizing the automotive adapter. Perform the citizens band (CB) AM transceiver interference test (§5.14.2) and the adjacent vehicle radio interference test (§5.14.3) utilizing only the battery pack.

5.14.1 Police FM Transceiver Interference Test.

5.14.1.1 Start the patrol vehicle engine and set it to a fast idle. Wait 30 s, place the radar device in the stationary approaching mode and switch on the installed FM transceiver. Track a just-acquired distant approaching target traveling at a speed of 80 km/h (50 mph), activate the push-to-talk switch and use the slide whistle to transmit tones via the microphone. Slowly vary the tone of the slide whistle from 500 Hz to

3 kHz and back to 500 Hz, observing the target speed display for possible erroneous readings. Repeat two more times.

5.14.1.2 Turn off the installed FM transceiver and repeat the procedure using a hand-held FM transceiver with an integral antenna and an output power of 2 W or more positioned at the patrol vehicle driver's location.

5.14.2 Citizens Band (CB) AM Transceiver Interference Test. Mount a 4 W minimum output CB transceiver in a typical front seat location and install the antenna as recommended by the manufacturer. Connect the CB transceiver power leads to the vehicle battery or the ignition switch circuitry, but not to the cigarette lighter. Start the patrol vehicle engine and set it to a fast idle. Place the radar device in the stationary approaching mode and track a just-acquired distant approaching target traveling at a speed of 80 km/h (50 mph). Switch on the CB transceiver, set it to channel 20, activate the push-to-talk switch, and use the slide whistle to transmit tones via the microphone. Slowly vary the tone from 500 Hz to 3 kHz and back to 500 Hz, observing the target speed display for possible erroneous readings. Repeat for channels 1 and 40.

5.14.3 Adjacent Vehicle Radio-Frequency Interference Test.

5.14.3.1 Start the patrol vehicle engine and set it to a fast idle. Place the radar device in the stationary approaching mode and track a just-acquired distant approaching target traveling at a speed of 80 km/h (50 mph). From a distance of at least 15 m (50 ft), slowly drive a second vehicle equipped with a police FM transceiver of at least 50 W of output power and a matching antenna past the patrol vehicle passing within 3 m (10 ft) of it. Use the slide whistle to transmit tones between 500 Hz and 3 kHz from this transceiver until reaching a point 15 m (50 ft) away from the patrol vehicle. Note any erroneous readings on the radar device display. Turn the second vehicle around and repeat the above procedure, passing within 3 m (10 ft) of the patrol vehicle on its other side, again using the slide whistle to transmit modulating tones from 500 Hz to 3 kHz, and observing the radar speed display.

5.14.3.2 Turn off the FM transceiver, mount a 4 W minimum output power CB transceiver powered by the vehicle electrical system in the second vehicle and repeat the above (§5.14.3.1) procedure.

5.15 Speed Accuracy: Field Operation Tests

5.15.1 Stationary-Mode Speedometer-Correction Factor. Establish a measured distance of at least 400 m (1,320 ft) on an open, level location away from other moving targets. Turn on the radar device, place it in the stationary approaching mode using the front antenna, and drive the patrol vehicle over the measured distance at a constant speed, measuring the elapsed time with a stopwatch while recording the patrol-speed reading and the speedometer readings. Repeat the procedure twice in each direction, maintaining the same speed for all four runs. Use the average elapsed time to determine the true patrol-vehicle speed and use this speed to calculate the patrol-vehicle speedometer-correction factor and the radar-device speed correction factor. Repeat this procedure for speeds of 32 km/h, 80 km/h, and 112 km/h (20 mph, 50 mph, and 70 mph).

5.15.2 Moving-Mode Speedometer-Correction Factor. For moving radar devices, switch to the opposite-direction moving mode of operation and repeat this procedure (§5.15.1) to obtain the appropriate correction factors. Repeat for the same-direction moving mode (if appropriate).

5.15.3 Stationary-Mode Speed Test. Switch the radar device to the stationary approaching mode of operation and position the radar equipped patrol vehicle near one end of the measured test range. Starting from the opposite end of the measured test range, drive a target vehicle through a measured distance of at least 400 m (1,320 ft) at a constant speed toward the patrol vehicle, measuring the elapsed time with a stopwatch, recording the exact distance and the speedometer reading and measuring target-vehicle speed with the radar device. For a directional radar device, briefly switch to the receding mode of operation during the test run and verify that the radar does not continue tracking the target vehicle. Repeat the above tests with the radar device operating in the receding target mode and with the target traveling away from the patrol vehicle toward the opposite end of the test track, and for directional radar devices briefly switch the radar to the approaching target mode during the test run and verify that the radar does not track the target vehicle. Next, move the patrol vehicle to the opposite end of the measured range and repeat the above procedure for both directions of travel of the target vehicle, again recording the stopwatch elapsed time, speedometer reading and radar speed reading. Calculate the average target-vehicle speed, the target-vehicle speedometer-correction factor and the indicated radar speed reading. Repeat this procedure for speeds of 32 km/h, 80 km/h, and 112 km/h (20 mph, 50 mph, and 70 mph).

5.15.4 Moving-Mode Speed Test. For moving radar devices, switch the radar device to the opposite-direction moving mode and station the patrol vehicle and target vehicle at least 400 m (1,320 ft) apart and at opposite ends of the measured distance such that each vehicle can make a constant speed run through the same 400 m (1,320 ft) section. Make three moving mode, constant speed, approaching runs in each direction, recording the measured distance, the speedometer readings of each vehicle, and the radar-device patrol and target-speed display readings. A stopwatch may be used to obtain the true vehicle speed. Average the six speedometer and target-speed display readings. Calculate the true target-vehicle speed, the target-vehicle correction factor and the indicated radar-target speed reading. Repeat this procedure using a patrol speed of 32 km/h (20 mph) and a target speed of 88 km/h (55 mph) and using a patrol speed of 88 km/h (55 mph) and a target speed of 112 km/h (70 mph).

5.15.5 Same-Direction Moving-Mode Speed Test. For radar devices with same-direction moving mode, switch to this mode and perform the following test at the speed conditions under §5.15.5.1 and §5.15.5.2.

Position the patrol vehicle and target vehicle at the same end of the test range, separated by sufficient distance to establish the desired speed upon entering the measured 400 m (1,320 ft) section. Make three same-direction moving mode, constant speed runs recording the measured distance, the speedometer reading of each vehicle

and the radar-device patrol and target-display readings. A stopwatch may be used to obtain the average true vehicle speed. The radar device may not be able to track the target vehicle over the entire length of the measured section of the range, however constant speed should be maintained over the measured section in order to obtain true speeds using the stopwatch For a directional radar device, verify that the radar automatically selects the correct faster/slower calculation. Average the three speedometer readings together and the three radar-device target-speed readings to obtain an average speedometer reading and an average radar-device target-vehicle reading. Calculate the target-vehicle speed-correction factor, true target-vehicle speed, and the indicated radar-target speed readings.

5.15.5.1 Switch the radar device to same-direction moving mode faster-target option (if provided). Make three runs through the test range using the above procedures with patrol vehicle and target vehicle speeds as follows:

5.15.5.1.1 Patrol vehicle speed of 32 km/h (20 mph) and target vehicle speed of 45 km/h (28 mph).

5.15.5.1.2 Patrol vehicle speed of 64 km/h (40 mph) and target vehicle speed of 88 km/h (55 mph).

5.15.5.2 Switch the radar device to same-direction moving mode slower-target option (if provided). Make three runs through the test range using the above procedures with patrol vehicle and target vehicle speeds as follows:

5.15.5.2.1 Patrol vehicle speed of 45 km/h (28 mph) and target vehicle speed of 32 km/h (20 mph).

5.15.5.2.2 Patrol vehicle speed of 88 km/h (55 mph) and target vehicle speed of 64 km/h (40 mph).

APPENDIX

Table I. Minimum Performance Specifications for DTR Radar Speed-Measuring Devices

Performance Characteristics	Minimum Requirement	Section
Tuning Fork Frequency Tolerance	±½ %	§2.4
Radar Device Tuning Fork Speed Tolerance	±2 km/h (±1 mph)	§2.5
Microwave Frequency	X-Band @ 10,525 MHz ±25 MHz K-Band @ 24,150 MHz ±100 MHz Ka-Band @ 33,400 MHz to 36,000 MHz ±100 MHz of the nominal value	§2.6.1
Radiated Output Power Variation	±1.5 dB	§2.6.3
Antenna Horizontal Beamwidth	X-Band @ 18° maximum K-Band @ 15° maximum Ka-Band @ 15° maximum	§2.6.4
Antenna Near-Field Maximum Power Density	5 mW/cm²	§2.6.5
Low Supply Voltage	10.8 V maximum (automotive system) or as specified by manufacturer (battery)	§2.8
Display Readability	Easily readable when used as intended	§2.12.1
Target Channel Sensitivity Stationary Mode	≤ 10 dB, 56 km/h to 144 km/h (35 mph to 90 mph) ≤ 5 dB, 96 km/h to 144 km/h (60 mph to 90 mph)	§2.12.6.1
Target Channel Sensitivity Opposite-Direction Moving Mode	≤ 10 dB, 64 km/h to 144 km/h (40 mph to 90mph) ≤ 5 dB, 96 km/h to 144 km/h (60 mph to 90 mph)	§2.12.6.2
Target Channel Sensitivity Same-Direction Moving Mode	≤ 10 dB patrol speed: ±8 km/h to 40 km/h (±5 mph to 25 mph)	§2.12.6.3
Target Channel Speed Displays	32 km/h (20 mph) maximum low speed 160 km/h (100 mph) minimum high speed	§2.12.7.1 §2.12.7.2
Patrol Channel Speed Displays	32 km/h (20 mph) maximum low speed 112 km/h (70 mph) minimum high speed	§2.12.8.1.1 §2.12.8.1.2
Patrol Channel Speed Changes	±2 km/h (±1 mph) for 4.8 km/h (3 mph) speed change per second	§2.12.8.2
Accuracy, Stationary Mode	+2 km/h, -3 km/h (+1 mph, -2 mph)	§2.15.1
Accuracy, Moving Mode	±3 km/h (±2 mph)	§2.15.2

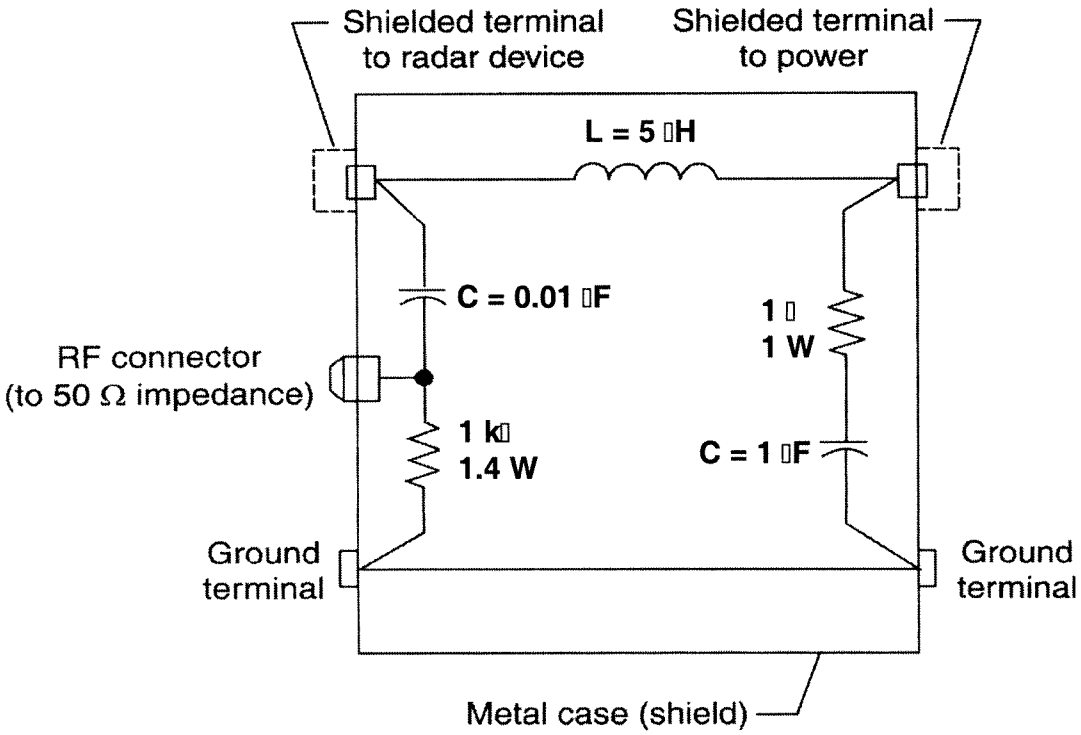

Figure 1. The line impedance stabilization network (LISN).

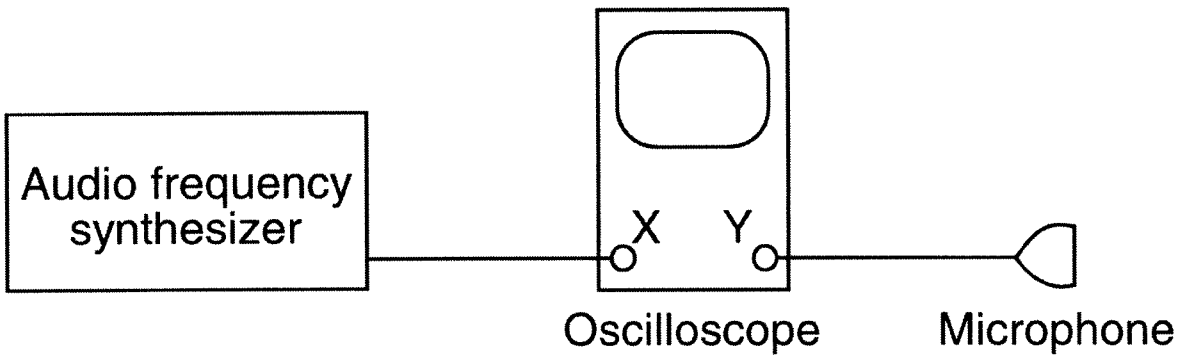

Figure 2. The tuning-fork calibration setup.

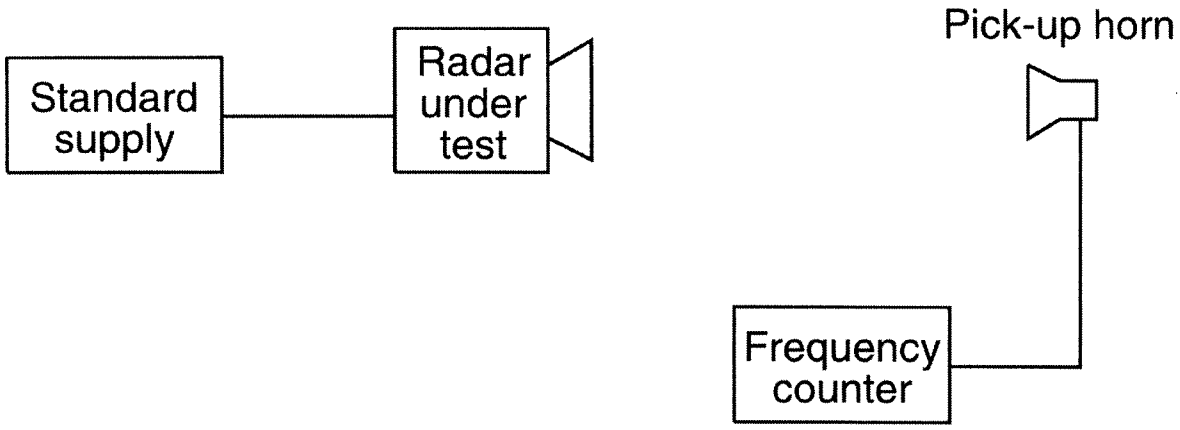

Figure 3. The transmission-frequency and frequency-stability measurements setup.

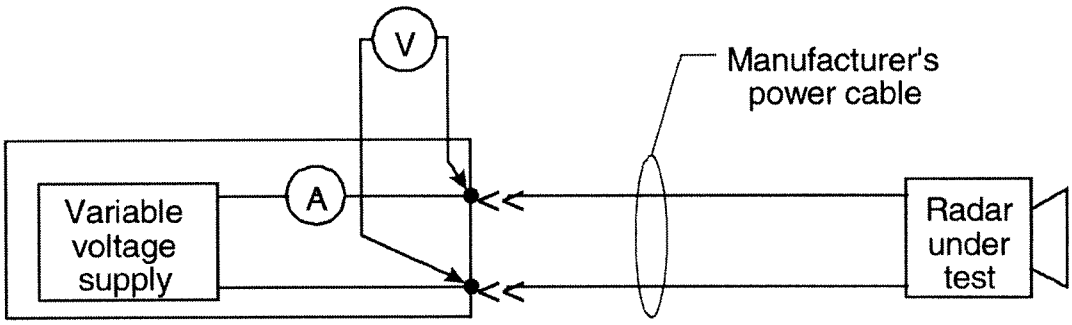

Figure 4. The input current and low supply voltage measurements setup.

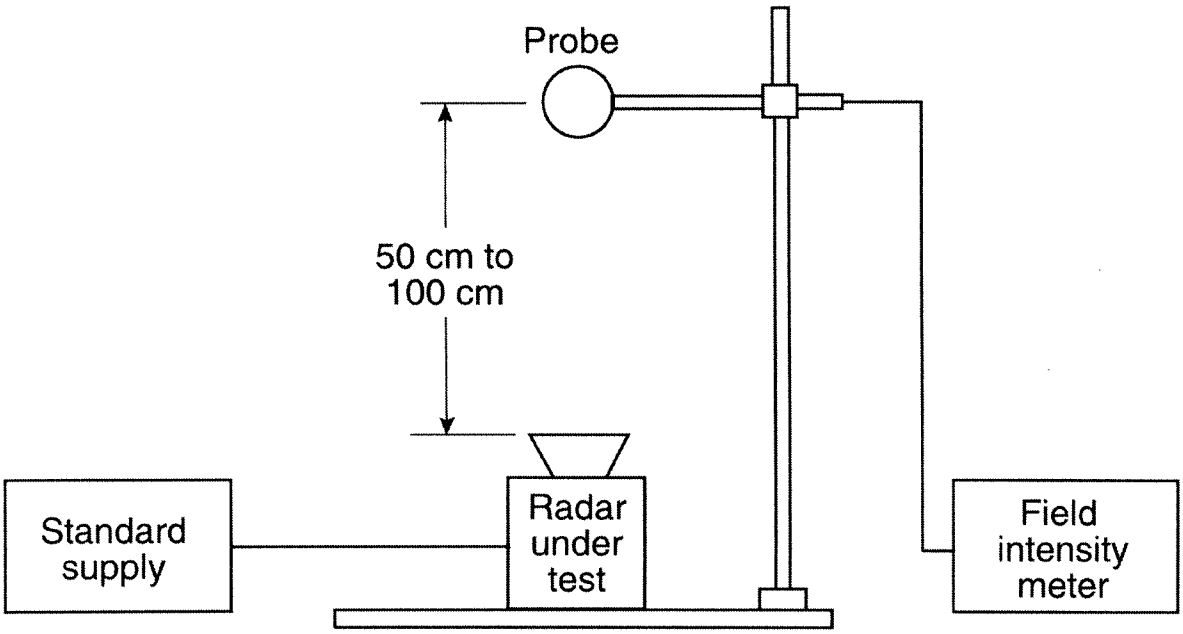

Figure 5. The antenna beamwidth measurement setup.

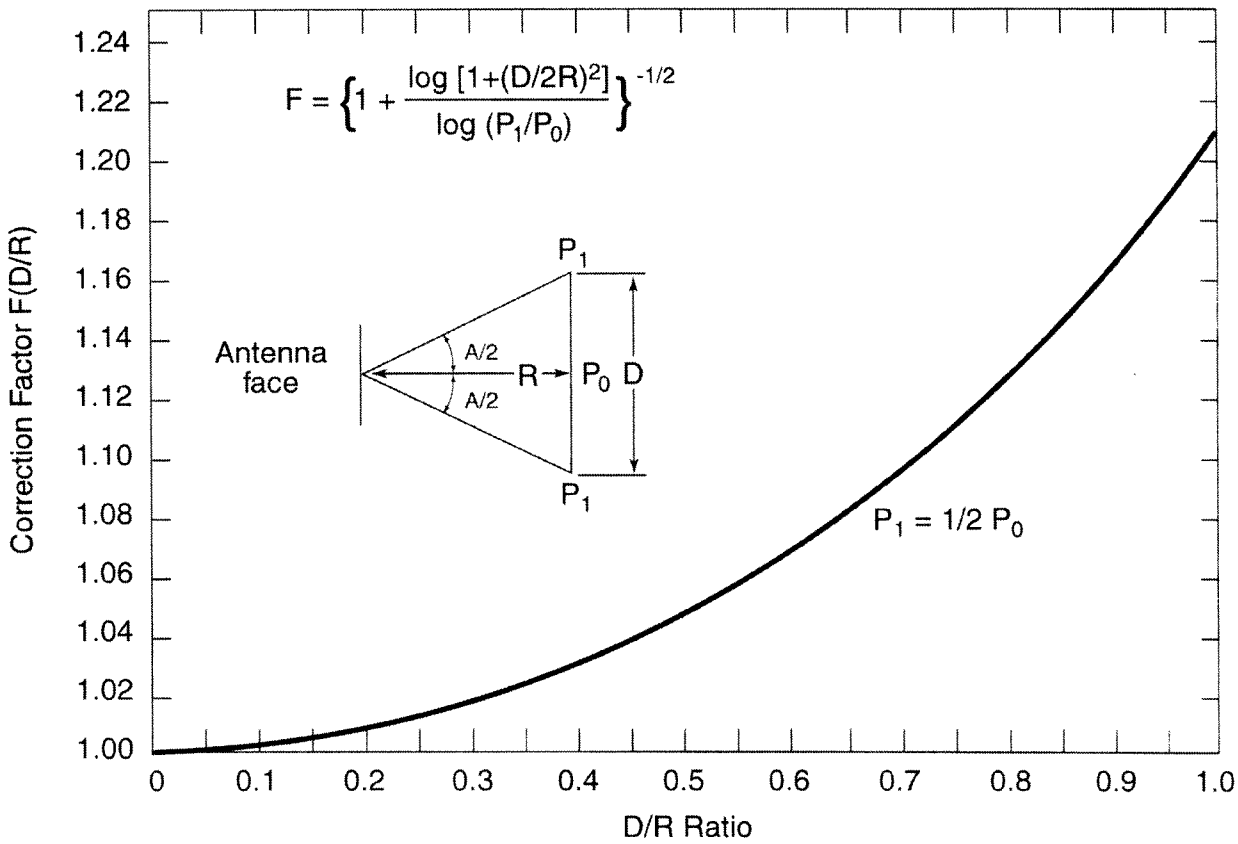

Figure 6. The antenna beamwidth correction factor, F.

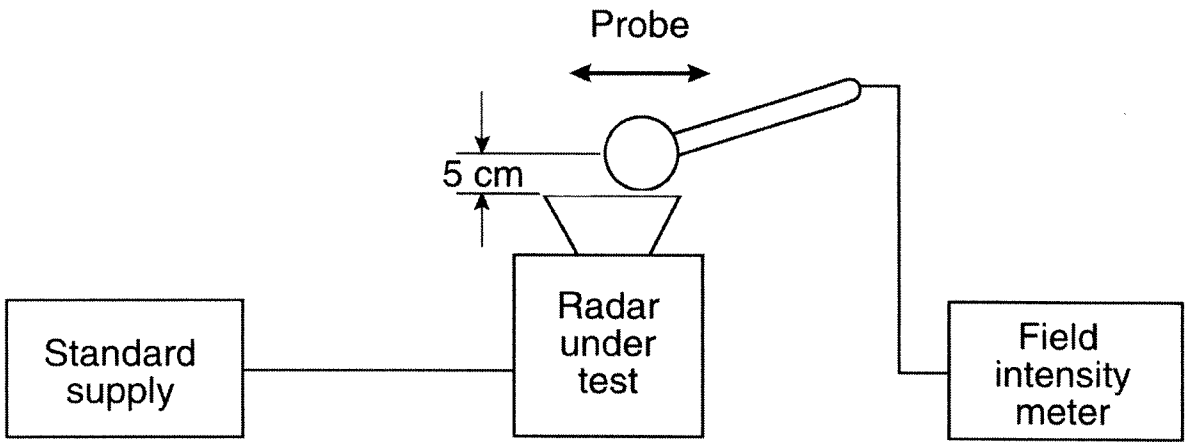

Figure 7. The antenna near-field power density measurement setup.

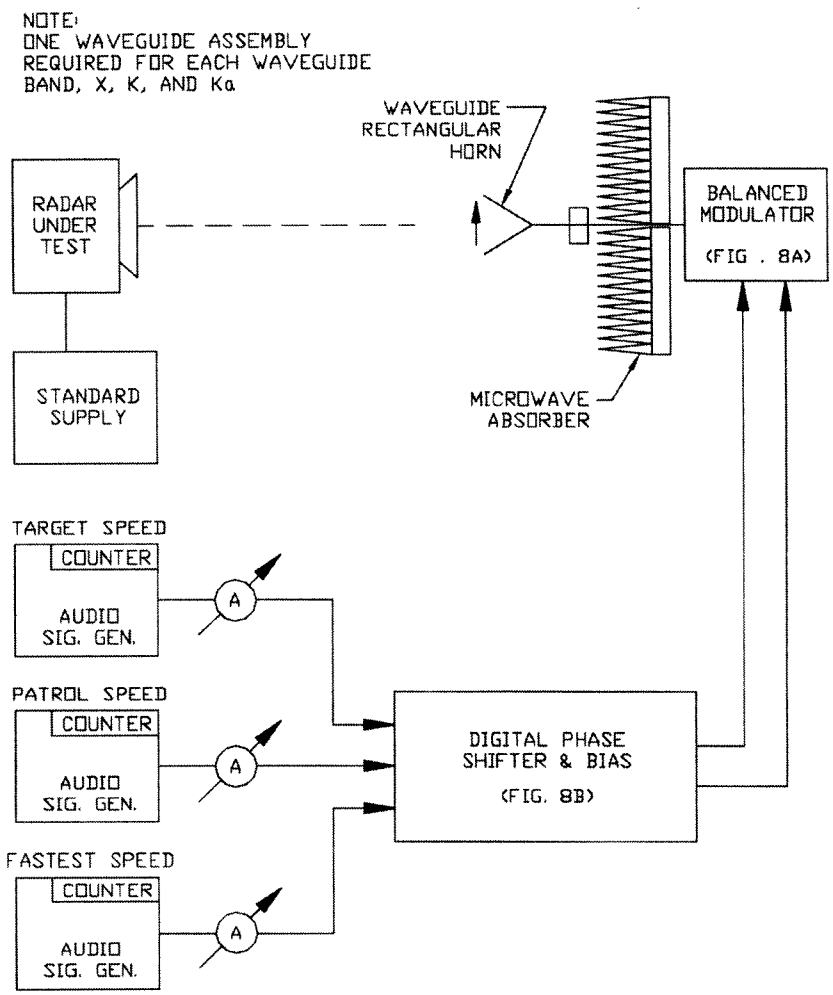

Figure 8. Block diagram of the DTR radar target simulator.

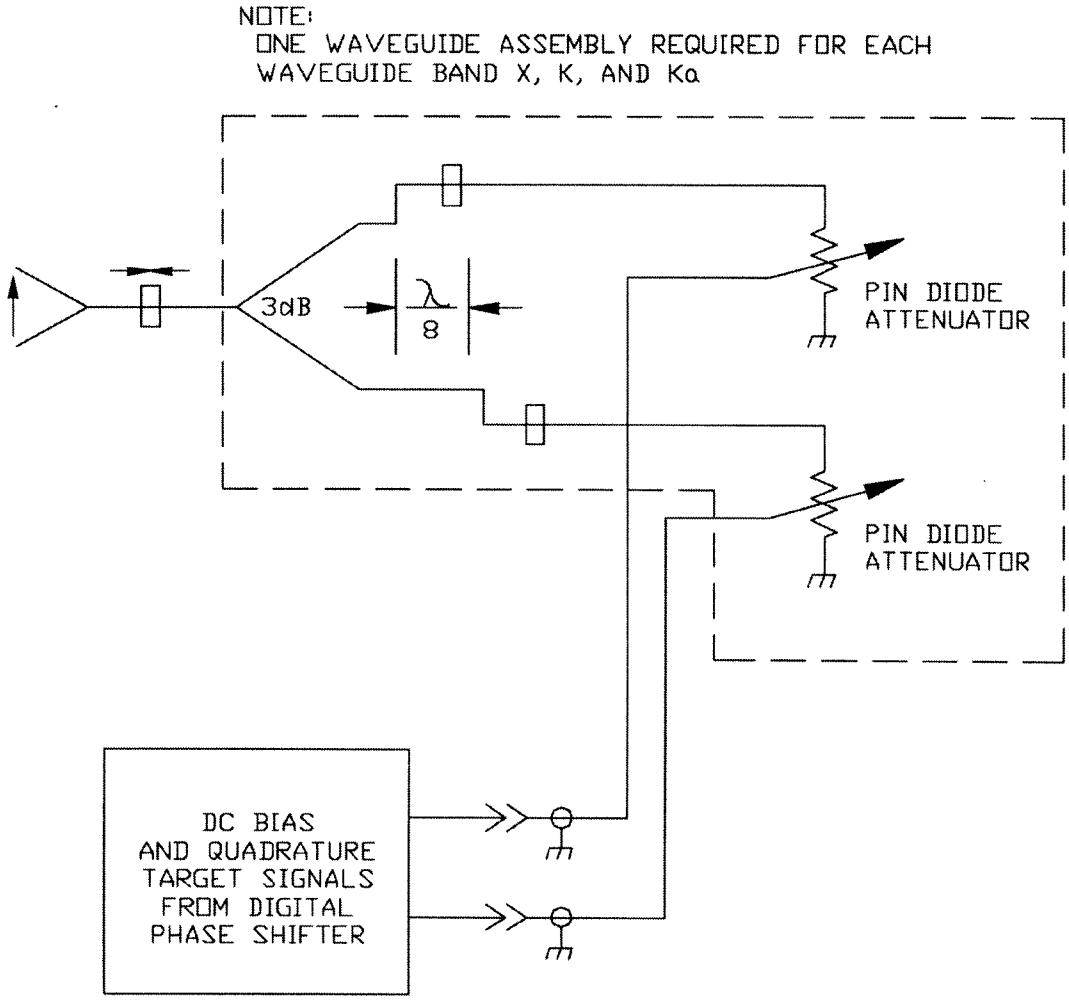

Figure 8a. Schematic of the balanced modulator shown in figure 8.

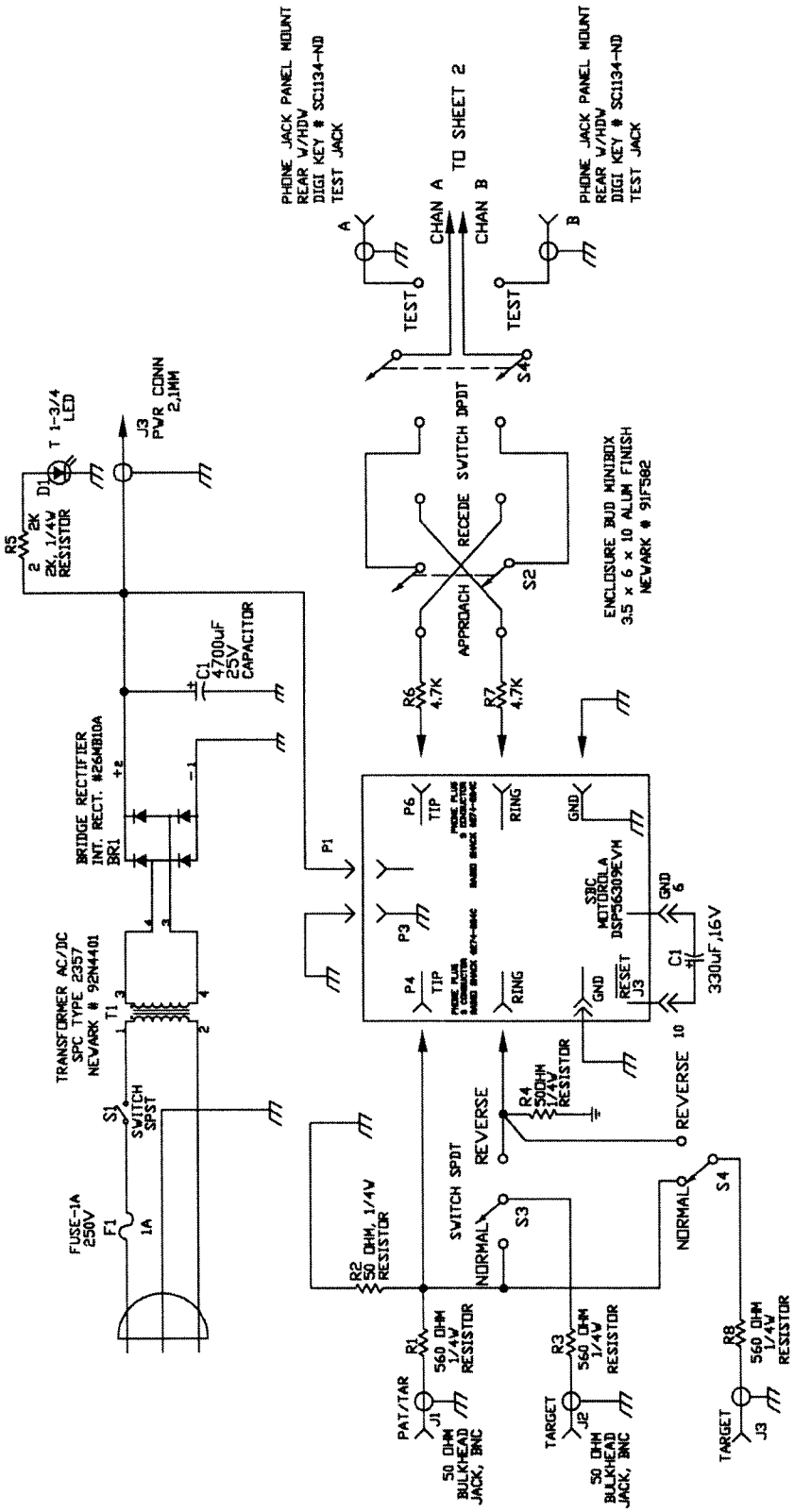

Figure 8b. Digital phase shifter and bias circuit shown in figure 8.

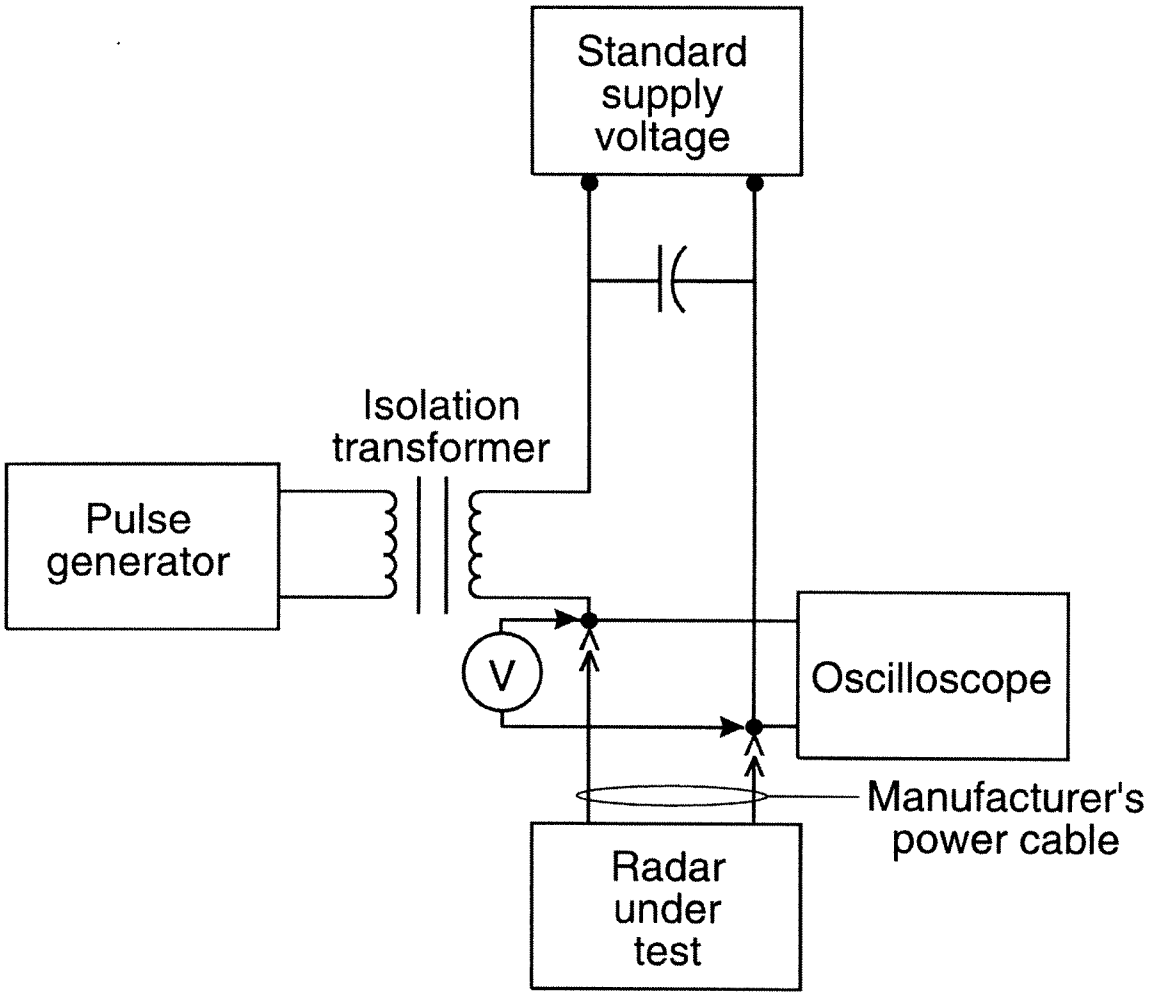

Figure 9. The simulated vehicle alternator interference measurement setup.

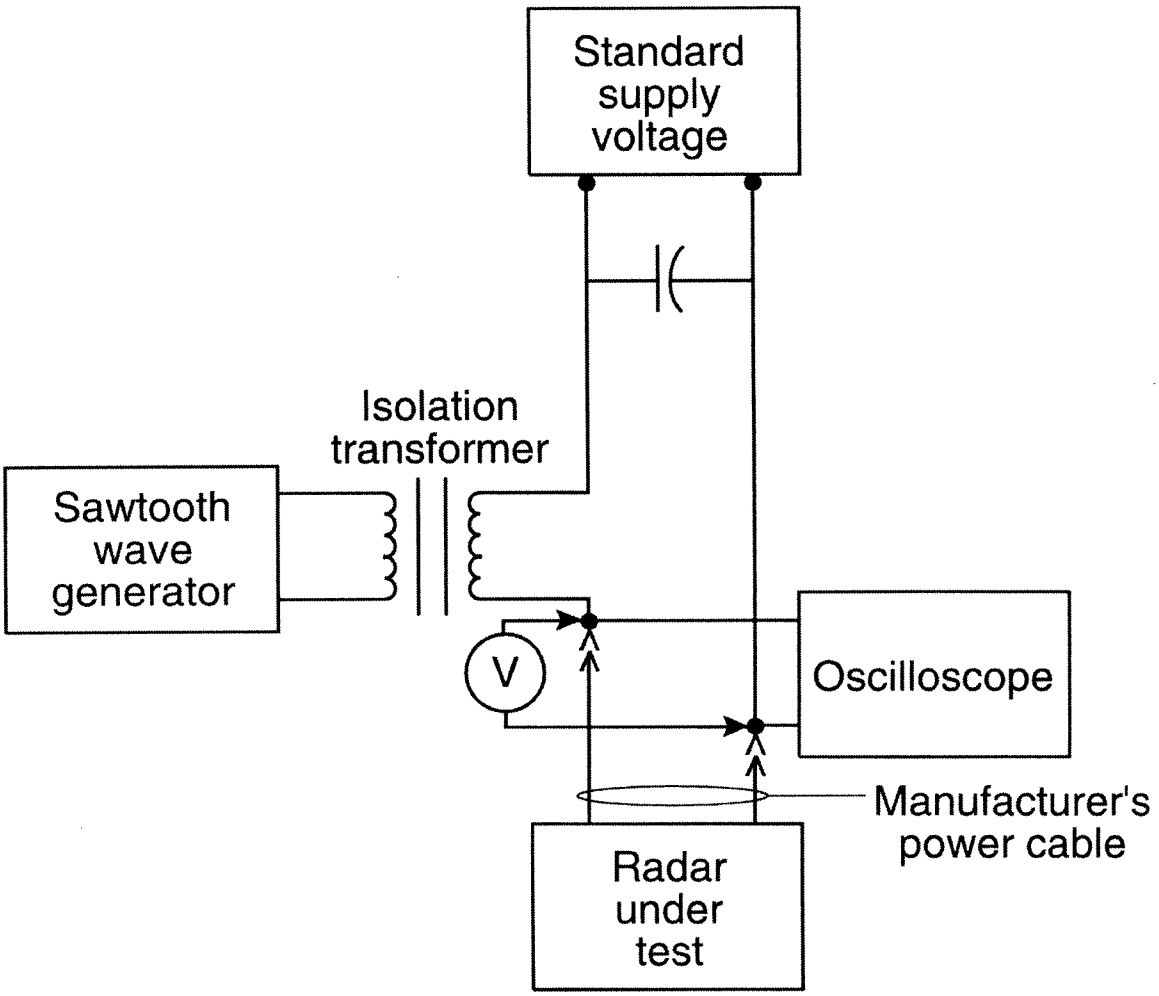

Figure 10. The simulated vehicle ignition, air conditioner/heater and windshield wiper interference measurements setup.

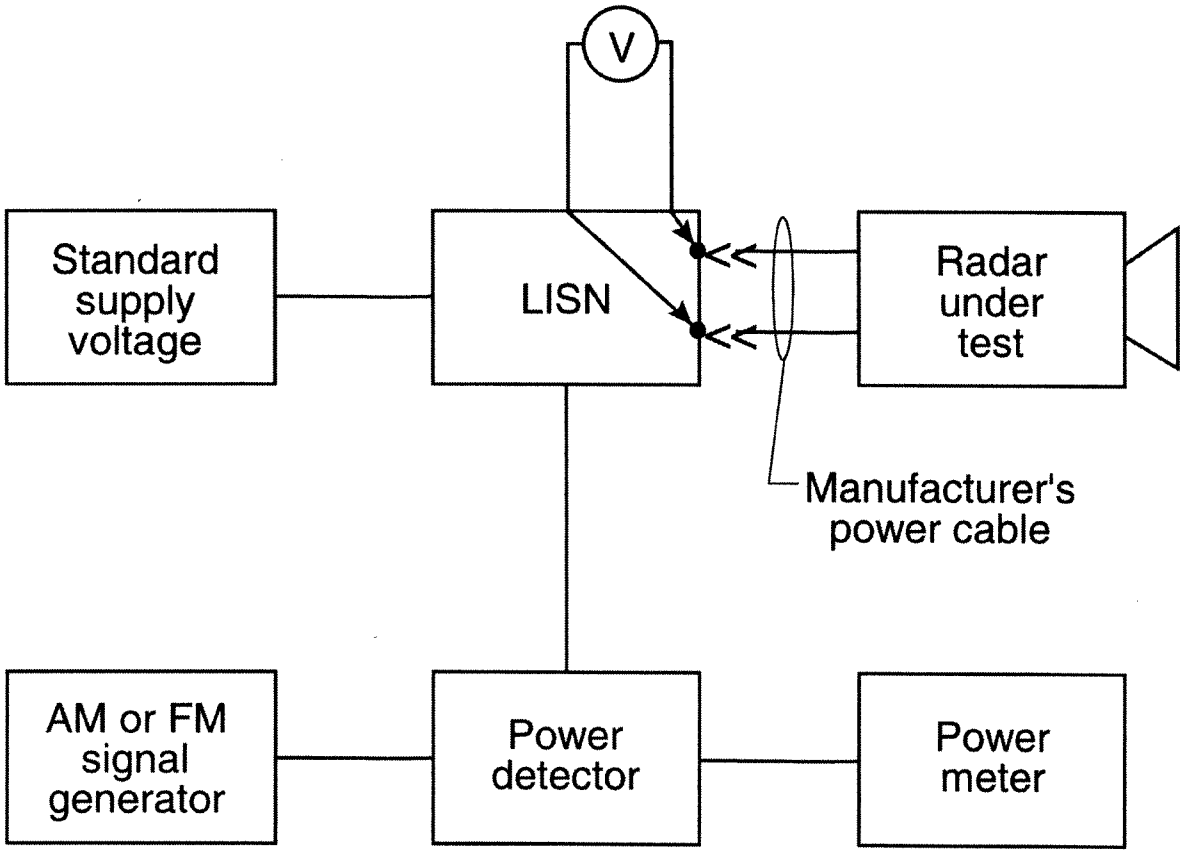

Figure 11. The simulated police FM transceiver and the citizens band AM transceiver interference measurements setup.

BIBLIOGRAPHY

1. Allen, D. W. and Brzoticky, F. H. 1975. "Calibration of Police Radar Instruments, NBS SP-442." *Report of the 60th National Conference on Weights and Measurements*. (May): 42-47.

2. Baird, R.C. 1967. "RF Measurements of the Speed of Light." *Proceedings of IEEE*. Vol 55, No. 6 (June).

3. IACP Speed-Measuring Device Testing Program Administrative Guide, International Association of Chiefs of Police, Alexandria, VA.

4. Radio Metrology. 1966. "NBS Nomograph 92." (March): 102-103.

5. SAE. 1987. "Electromagnetic Susceptibility Procedures for Vehicle Components." *Recommended Practice J1113A*. (August).

6. U.S. Federal Communications Commission. *Rules and Regulations, Part 90, Subpart F*. Washington, DC: United States Government Printing Office.

7. U.S. Federal Communications Commission. 1979. *Bulletin OCE 37, Criteria to be Met by Doppler Radars Operating in the 24.05-24.25 GHz Frequency Band*. Washington, DC: United States Government Printing Office.

DOT HS 809 812
June 2004

U.S. Department
of Transportation
**National Highway
Traffic Safety
Administration**

NHTSA
People Saving People
www.nhtsa.dot.gov