UNITED STATES PATENT AND TRADEMARK OFFICE

BEFORE THE PATENT TRIAL AND APPEAL BOARD

SAMSUNG ELECTRONICS CO., LTD.;
SAMSUNG ELECTRONICS AMERICA, INC.,
Petitioner

v.

SLYDE ANALYTICS, LLC
Patent Owner.

**DECLARATION OF BENJAMIN B. BEDERSON
IN SUPPORT OF PETITION FOR *INTER PARTES* REVIEW
OF U.S. PATENT NO. 8,588,033**

I. INTRODUCTION 1
A. Qualifications 1
B. Materials Considered 14
II. LEGAL STANDARDS 18
A. Anticipation 19
B. Obviousness 20
C. Level of Ordinary Skill in the Art 23
D. Claim Construction 24
III. SUMMARY OF GROUNDS 25
IV. THE ’033 PATENT 26
A. Overview of the ’033 Patent 26
B. Prosecution History of the ’033 Patent 28
V. TECHNOLOGY BACKGROUND 29
A. Touchscreen Interfaces 29
B. Touchscreen Interfaces on Wristwatches 30
C. Simulations of Mechanical Watch Components 34
VI. THE PRIOR ART IN THE APPLIED INVALIDITY GROUNDS 38
A. Mooring (Ex-1005) 38
B. Satoshi (Ex-1007) 41
C. Lee (Ex-1008) 45
D. Louch (Ex-1009) 46
E. Inoue (Ex-1010) 48
F. Ruchonnet (Ex-1011) 49
G. Tam (Ex-1012) 50
VII. CLAIM CONSTRUCTION 52
A. Claim 10: “means for modifying the running of said displayed regulating organ according to the accelerations to which the watch is subjected.” 53
B. Claim 12: “means for entering and executing a request for said synchronization by the user.” 54

VIII. DETAILED EXPLANATION OF THE UNPATENTABILITY GROUNDS 56

A. Ground 1: Claims 1 and 11-14 are obvious over Mooring in view of Satoshi. 56

1. A POSITA would have been motivated to combine Mooring and Satoshi's teachings and would have had a reasonable expectation of success. 56

2. Independent claim 1 58

a. Element 1[pre]: Wristwatch comprising: 58

b. Element 1[a]: a watchcase; 59

c. Element 1[b]: an electronic display in said watchcase, ... 60

d. Element 1[c]: a quartz oscillator, ... 61

e. Element 1[d]: a microcontroller being arranged for reproducing on said electronic display the simulation of a mechanical watch movement comprising a gear train, said simulation being visible so as to indicate the time, said microcontroller being further arranged for synchronizing the displayed time by said displayed mechanical movement with that of said quartz oscillator. 63

3. Dependent Claim 11: The wristwatch of claim 1, arranged for performing said synchronization periodically in an automatic manner. 73

4. Dependent Claim 12: The wristwatch of claim 11, comprising means for entering and executing a request for said synchronization by the user. 74

5. Dependent Claim 13: The wristwatch of claim 1, arranged for displaying said mechanical movement on the whole surface of the electronic display so as to occupy the position and the dimensions of a real mechanical movement. 76

6. Dependent Claim 14: The wristwatch of claim 1, said microcontroller being arranged for enabling different

Petitioner Samsung Ex-1002, 0003

mechanical movements selectable by the user for display. 81

B. Ground 2: Claims 2-3, 17, and 19 are obvious over Mooring and Satoshi in further view of Lee. 83

1. A POSITA would have been motivated to combine Mooring and Satoshi's teachings with Lee's teachings and would have had a reasonable expectation of success. 83

2. Dependent Claim 2 84

a. Element 2[pre]: The wristwatch of claim 1, wherein: 84

b. Element 2[a]: said electronic display is associated with a touch sensor; 84

c. Element 2[b]: and the position of at least one component of said movement can be modified by pressing on the position of said electronic display corresponding to said component. 85

3. Dependent Claim 3 86

a. Element 3[pre]: The wristwatch of claim 2, wherein: 86

b. Element 3[a]: wherein said microcontroller is arranged for displaying the simulation of a movement and.....86

c. Element 3[b]: wherein the angular position of at least one element of said gear-train can be modified by pressing on said touch sensor. 87

4. Independent Claim 17: 89

a. Element 17[pre]: Method for displaying time in a wristwatch, comprising displaying on an electronic display of a simulated mechanical watch movement comprising a gear train and of time indicators so as to simulate a mechanical watch, ...89

b. Element 17[a]: said method comprising a step of modifying a position of at least one component of said mechanical movement by detecting displacement of a finger on that component with a touch sensor connected to said display.....89

5. Dependent Claim 19: The method of claim 17, comprising a step of loading new displayable mechanical movements through an input-output interface of the watch.....89

C. Ground 3: Claims 13-16 are obvious over Mooring and Satoshi in further view of Louch.....91

1. A POSITA would have been motivated to combine Mooring and Satoshi's teachings with Louch's teachings and would have had a reasonable expectation of success.....91

2. Dependent Claim 13: The wristwatch of claim 1, arranged for displaying said mechanical movement on the whole surface of the electronic display so as to occupy the position and the dimensions of a real mechanical movement.....95

3. Dependent Claim 14: The wristwatch of claim 1, said microcontroller being arranged for enabling different mechanical movements selectable by the user for display. 96

4. Dependent Claim 15 99

a. Element 15[pre]: The wristwatch of claim 1, wherein: 99

b. Element 15[a]: said display being a display associated with a touch sensor enabling the displacements of at least one finger along at least two different directions to be detected, with the microcontroller being specifically arranged for interpreting signals from the touch sensor, for selecting one screen from among several available screens depending on these signals, and for displaying this screen on the entirety of said display,.....99

c. Element 15[b]: said microcontroller being further specifically arranged so as to cause screens to scroll by in order to replace durably the screen displayed initially by another screen, with the orientation and the direction of scrolling depending on the orientation and direction of said displacement, ... 103

d. Element 15[c]: wherein at least two of said screens correspond to two distinct mechanical movements that can be selected by the user. 105

5. Independent Claim 16 106

a. Element 16[pre]: Wristwatch comprising: 106

b. Element 16[a]: a watchcase; 106

c. Element 16[b]: an electronic display in said watchcase; 106

d. Element 16[c]: a touch sensor associated with said display and enabling the displacement of at least one finger along at least two different directions to be detected 106

e. Element 16[d]: a quartz oscillator, ... 107

f. Element 16[e]: a microcontroller being arranged for reproducing on said electronic display a simulation of a mechanical watch movement comprising a gear train visible so as to indicate the time and for synchronizing the displayed time by said displayed mechanical movement with that of said quartz oscillator, ... 107

g. Element 16[f]: said microcontroller being further arranged for interpreting signals from the touch sensor, for selecting one screen from among several available screens depending on these signals, and for displaying this screen on the entirety of said display, ... 107

h. Element 16[g]: said microcontroller being further specifically arranged so as to cause screens to scroll by in order to replace durably the screen displayed initially by another screen, with the orientation and the direction of scrolling depending on the orientation and direction of said displacement, ... 108

i. Element 16[h]: wherein at least two of said screens correspond to two distinct mechanical movements that can be selected by the user. 108

D. Ground 4: Claims 4-5 are obvious over Mooring and Satoshi in further view of Inoue and Tam. 108

1. A POSITA would have been motivated to combine Mooring and Satoshi's teachings with the teachings of Tam and Inoue and would have had a reasonable expectation of success. 108

2. Dependent Claim 4: The wristwatch of claim 1, comprising a crown outside said watchcase; a crown stem being displayed on said display opposite said crown, the position of said displayed crown stem being modified by said microcontroller when said microcontroller detects that said crown has been actuated, so as to simulate a direct action by said crown on said displayed crown stem. 115

3. Dependent Claim 5: The wristwatch of claim 1, comprising a push-button outside said watchcase; an element displayed on said display opposite said push-button, the position of said element being modifiable by said microcontroller when said microcontroller detects that said push-button has been actuated, so as to simulate a direct action by said push-button on said displayed element. 117

E. Ground 5: Claims 6-10 and 13 are obvious over Mooring and Satoshi in further view of Tam and Ruchonnet. 120

1. A POSITA would have been motivated to combine Mooring and Satoshi's teachings with the teachings of Tam and Ruchonnet and would have had a reasonable expectation of success. 120

2. Dependent Claim 6: The wristwatch of claim 1, further comprising an accelerometer, said microcontroller being arranged for modifying the position of at least one of said elements of said movement according to the data from said accelerometer. 125

3. Dependent Claim 7: The wristwatch of claim 6, wherein said displayed mechanical movement is an automatic movement with an oscillating mass, the position of said displayed oscillating mass depending on an output signal from said accelerometer. 127

4. Dependent Claim 8: The wristwatch of claim 6, wherein said displayed mechanical movement comprises a regulating organ with a balance and/or a tourbillon displayed on said display, the position of said displayed balance and/or tourbillon depending on an output signal from said accelerometer. 128

5. Dependent Claim 9: The wristwatch of claim 1, wherein said displayed mechanical movement comprises a regulating organ with a balance, a returning element and an escapement, the microcontroller being arranged for calculating and displaying a simulation of the oscillations of said displayed regulating organ taking into account the mass of said balance and the rigidity of said returning element, wherein the displayed time depends on said simulation. 130

6. Dependent Claim 10: The wristwatch of claim 9, comprising means for modifying the running of said displayed regulating organ according to the accelerations to which the watch is subjected. 132

7. Dependent Claim 13: The wristwatch of claim 1, arranged for displaying said mechanical movement on the whole surface of the electronic display so as to occupy the position and the dimensions of a real mechanical movement. 135

F. Ground 6: Claim 18 is obvious over Mooring and Satoshi in further view of Lee, Tam, Inoue, and Ruchonnet. 136

IX. CONCLUSION 137

I. INTRODUCTION

1. I have been retained by Samsung Electronics Co., Ltd. and Samsung Electronics America, Inc. (collectively, "Samsung" or "Petitioner"), as an independent expert in this proceeding before the Patent Trial and Appeal Board ("PTAB" or "Board"). I understand that Samsung is requesting that the Board institute an *inter partes* review ("IPR") proceeding of U.S. Patent No. 8,588,033 ("the '033 Patent") (Ex-1001), currently assigned to Slyde Analytics LLC ("Patent Owner" or "PO").

2. I am not and have never been an employee of Samsung. I am being compensated at my usual and customary rate of $600 per hour. No part of my compensation depends on the outcome of this proceeding, and I have no other interest in this proceeding.

3. I have been asked to provide my independent analysis of the '033 Patent in light of the prior art publications cited below. I have also been asked to consider the state of the art and prior art available as of March 30, 2010. Based on the prior art discussed in this declaration, it is my opinion that Claims 1-19 of the '033 Patent are unpatentable for the reasons provided below.

A. Qualifications

4. I am currently Professor Emeritus of Computer Science at the University of Maryland ("UMD"). From 2014 to 2018, I was the Associate Provost

of Learning Initiatives and Executive Director of the Teaching and Learning Transformation Center at the UMD. I am a member and previous director of the Human-Computer Interaction Lab ("HCIL"), the oldest and one of the best-known Human-Computer Interaction ("HCI") research groups in the country. I am the co-founder of the J.S. Bryant School, a therapeutic high school planned to open in 2025. I was also co-founder and Chief Scientist of Zumobi, Inc. from 2006 to 2014, a Seattle-based startup that is a publisher of content applications and advertising platforms for smartphones. I am also co-founder and co-director of the International Children's Digital Library ("ICDL"), a web site launched in 2002 that provides the world's largest collection of freely available online children's books from around the world with an interface aimed to make it easy for children and adults to search and read children's books online. I am also cofounder and Chief Technology Officer of Hazel Analytics, a data analytics company to improve food safety and better public health whose product sends alerts in warranted circumstances. In addition, I have for more than 25 years consulted for numerous companies in the area of user interfaces, including Hillcrest Labs, Lockheed Martin, Logitech, Microsoft, NASA Goddard Space Flight Center, the Palo Alto Research Center, and Sony.

5. For more than 30 years, I have studied, designed, and worked in the field of computer science and Human-Computer Interaction (HCI). My experience includes 30 years of teaching and research, with research interests in HCI and the

software and technology underlying today's interactive computing systems. This includes the design and implementation of hardware and software systems including graphical user interfaces with capacitive and other touch screen sensors, and interactive applications on a range of devices, including embedded systems, controllers, smart phones and PDAs.

6. At UMD, I am focused primarily on the area of HCI, a field that relates to the development and understanding of computing systems to serve users' needs. Researchers and practitioners in this field are focused on making universally usable, useful, efficient, and appealing systems to support people in their wide range of activities. My approach is to balance the development of innovative technology that serves people's practical needs. Example systems following this approach that I have built include Cortex-I (an 1992 embedded computer vision system that sensed licensed plates with custom motor, camera and controller), Audio Augmented Reality (an 1995 embedded system for sensing a user's location and playing audio suited to that location), Fisheye Menus (an 2000 software system for sensing movement within and selection of linear list of items in a menu), PhotoMesa (an 2001 software system for end users to browse personal photos), DateLens (an 2002 software system for end users to use their mobile devices to efficiently access their calendar information), SlideBar (an 2005 linear sensor to control scrolling), LaunchTile (an 2005 "home screen" software for mobile devices to allow users to

navigate apps in a zoomable environment), SpaceTree (an 2001 software system for end users to efficiently browse very large hierarchies), ICDL (as described above), and StoryKit (an 2009 iPhone app for children to create stories).

7. Throughout the 1990s and 2000s, I worked on a range of "zoomable user interfaces," which are systems that support the multi-scale and spatial organization of and magnification-based navigation among multiple documents or visual objects. I built several different "ZUI" systems over the years, including Pad++, Jazz and Piccolo. In those systems, I used a range of solutions to allow users to control zooming through the information space. The most common approach for systems with three button mice was to use the middle button for zooming in and the right button for zooming out. *See* Ex-1023, p. 18. The user would hold the button down, and the system would smoothly animate zooming in or out – so that the user controlled how much the system zoomed based on the duration that the button was pressed. *See id.*, pp. 20, 22.

8. In 1995 and 1996, I supervised graduate student David Rogers and other students in the development of a user interface approach that allowed a user to "toss" an object across long distances on their screen with their mouse. *See* Ex-1024, p. 1. Motivated by increasingly large computer screens, we recognized a need to help users move items long distances without necessarily having to drag the item that entire distance manually. *See id.* Instead, we calculated the speed and direction

that the user dragged an object with their mouse. When a user released the mouse button, if the speed was greater than a threshold, our code calculated the path of where to animate the object based on several factors including the speed and direction of the mouse at the time of mouse button release. The figure below from a paper we wrote in 1996 shows the path of a tossed object. This resulted in David Rogers's master's thesis in 1995 and a paper that we submitted to the 1996 Conference on Human Factors in Computing Systems (CHI 1996).

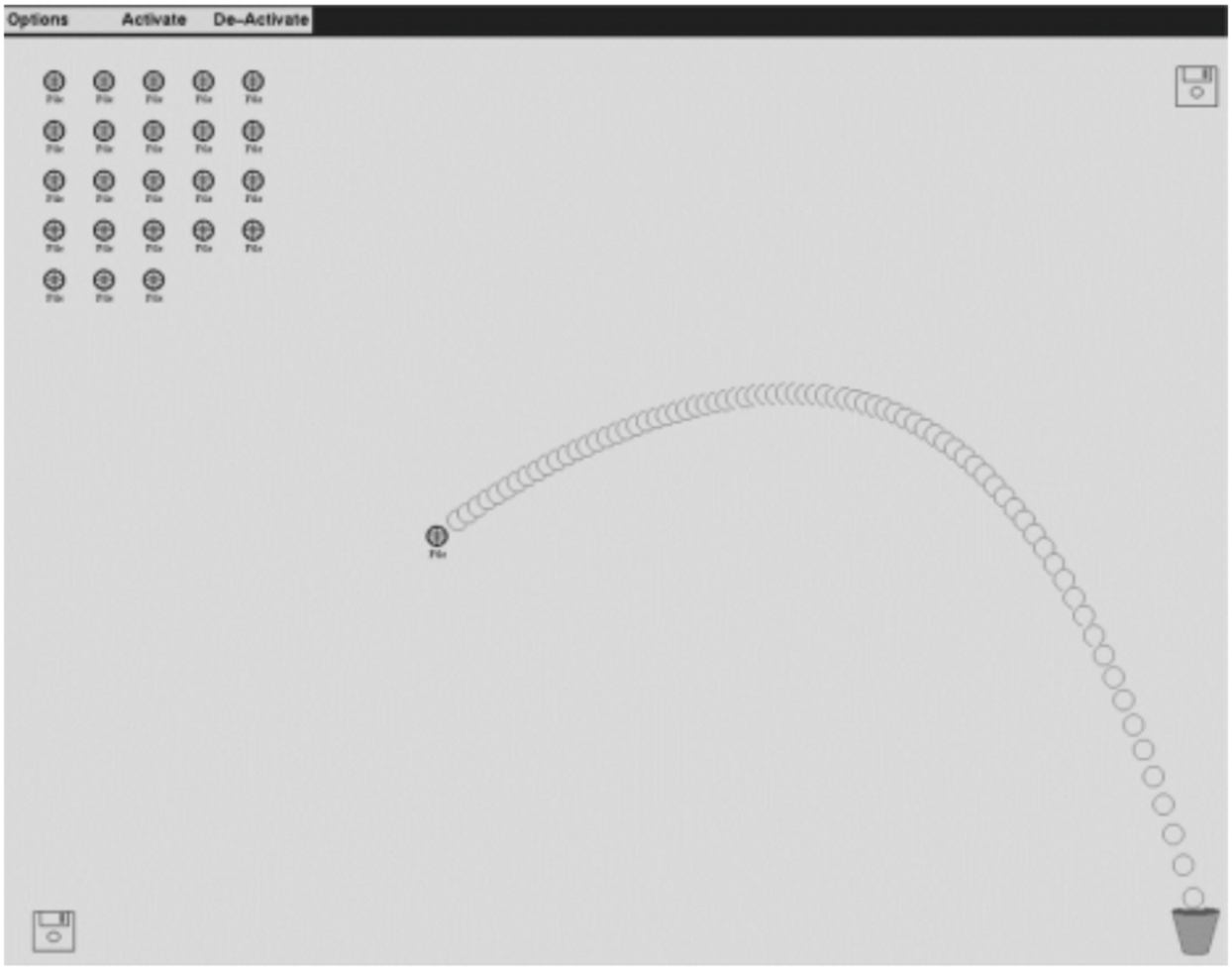

Exemplar Figure of Tossing.

9. In 1999 and 2000, I worked on a mechanism to address the challenge that users faced when selecting one item from a long menu. As I described in a paper entitled "Fisheye Menus" that I published in the 2000 Proceedings of the ACM Symposium on User Interface Software and Technology, existing techniques typically involved lengthy and slow scrolling techniques. *See* Ex-1025, p. 8. I created an alternative solution that fit all of the elements onto a single screen thereby completely eliminating the need to scroll. *See* Ex-1025, p. 1. This approach used the concept of "fisheye distortion" to shrink some of the elements, while keeping the elements that are under the cursor to be full size so the user could easily see and select them. *See id*. This approach as depicted in the figure below and described further in the paper, was later used in a number of commercial products such as the Apple MacOS Dock.

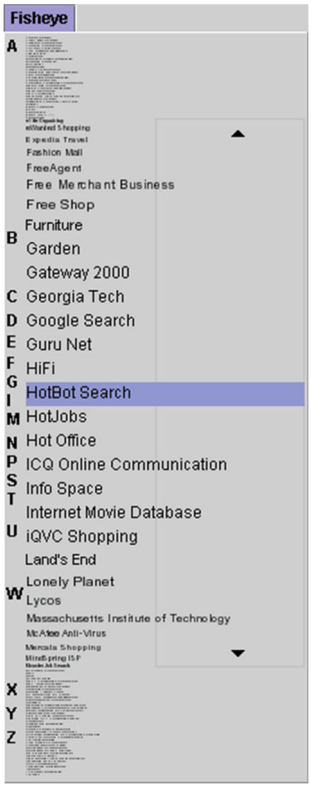

Figure 2.

10. Starting in 2000, I supervised graduate student Leslie Chipman who was working on a general solution to improve the user experience of people scrolling long documents on computers. Our solution relied on a passive haptic physical linear input device we called the "Slidebar." *See* Ex-1026, p. 1. The Slidebar was designed to sit on either side of the keyboard to be used with the non-dominant hand for scanning and rough positioning, and then if the user wanted to switch to reading, the dominant hand could be used for more accurate positioning. *See id*. With a physical range of motion of approximately two inches, the full range could be accessed by moving just the fingers without moving the entire hand. *See id*. This

took advantage of human proprioception—the fact that people have excellent ability to know where their body is—and allowed the user to scroll long documents completely eyes-free. *See id*, p. 4. They did not need to look at the device or the screen to, for example, move a mouse pointer to a graphical scroll bar. Instead they could focus on their primary task of reading. This work was published in 2004.

11. In April 2000, I visited Professors Wayne Westerman and John Elias at the University of Delaware and gave a talk entitled "Zoomable User Interfaces and Single Display Groupware." This resulted in a collaboration with Professor Westerman, graduate student Hilary Browne, and others where we used their FingerWorks capacitive Multi-Touch Surface as the input device for a multi-touch finger painting program for children. *See* Ex-1027, p. 1. The project used this input device to support a computer painting program that allowed children to paint with their fingers by directly touching the sensing surface. In contrast to the mouse input more typically used in this time period, this approach enabled us to create a more natural interaction environment. *See id*. This work, depicted in the figure below, was published in a September 2000 technical report.

Figure 1.

12. Throughout the 2000's, I worked on a range of interfaces for mobile devices with a focus on interface design for touch interfaces, including those with capacitive sensors. During this period, it became apparent that some positions on a screen were easier to access than others, especially when used with a single hand. To understand this issue, I led a range of studies that resulted in two papers published in 2006 and 2007. Ex-1028; Ex-1029. The following figure summarizes the results of one of the studies, and shows that generally speaking, when using a single hand, the center of the screens was easier for users to touch than the edges of the screen, and that the corners of the screen were the hardest positions to touch.

Table 2. Preference and movement time maps for each device. Depth of color in columns 1 and 2 indicate stronger user agreement.

	Subjective Difficult Regions	Subjective Easy Regions	Preference -Derived Regions Easy Medium Hard	Data-Derived Regions Fastest Slowest
SMALL	8 5 1 9 10	10 11 15 13 16 15 13 11 4 4		
FLIP	8 3 1 1 2 5 4 10	11 12 10 12 16 14 14 16 10 7 8 4		
LARGE	12 6 5 5 2 1 3 3 4 1 2 6 5 7 13 12 13	4 5 4 7 10 9 14 15 12 16 16 13 13 13 9 6 7 7 1 2 1		
PDA	13 8 7 9 10 4 2 4 9 3 1 4 9 3 1 5 11 4 2 8 14 9 9 14	2 5 5 3 3 11 11 7 4 15 16 8 6 15 16 5 4 11 8 4 1 2 2		

Ex-1029, Table 2.

13. This work on touch screen mobile devices led to my creation of Zumobi in 2006, where I was responsible for investigating new software platforms and developing new user interface designs that provide efficient and engaging interfaces to permit end users to access a wide range of content on mobile platforms (including the iPhone and Android-based devices). For example, I designed and implemented

software called "Ziibii," a "river" of news for iPhone that used a capacitive sensor for controlling linear movement through news; software called "ZoomCanvas," a zoomable user interface for several iPhone apps; and iPhone apps including "Inside Xbox" for Microsoft and Snow Report for REI. At the ICDL, I have since 2002 been the technical director responsible for the design and implementation of the web site, www.childrenslibrary.org (originally at www.icdlbooks.org). In particular, I have been closely involved in designing the user interface as well as the software architecture for the web site since its inception in 2002.

14. Beginning in the mid-1990s, I have been responsible for the design and implementation of numerous other web sites in addition to the ICDL. For example, I designed and built my own professional web site when I was an Assistant Professor of Computer Science at the University of New Mexico in 1995 and have continued to design, write the code for, and update both that site (which I moved to the UMD in 1998, currently at http://www.cs.umd.edu/~bederson/) as well as numerous project web sites, such as Pad++, http://www.cs.umd.edu/hcil/pad++/. I received the Janet Fabri Memorial Award for Outstanding Doctoral Dissertation for my Ph.D. work in robotics and computer vision. I have combined my hardware and software skills throughout my career in HCI research, building various interactive electrical and mechanical systems that couple with software to provide an innovative user experience.

15. My work has been published extensively in more than 160 technical publications, and I have given about 100 invited talks, including 9 keynote lectures. I have won a number of awards including the Brian Shackel Award for "outstanding contribution with international impact in the field of HCI" in 2007, and the Social Impact Award in 2010 from the Association for Computing Machinery's ("ACM") Special Interest Group on Computer Human Interaction ("SIGCHI"). ACM is the primary international professional community of computer scientists, and SIGCHI is the primary international professional HCI community. I have been honored by both professional organizations. I am an "ACM Distinguished Scientist," which "recognizes those ACM members with at least 15 years of professional experience and 5 years of continuous Professional Membership who have achieved significant accomplishments or have made a significant impact on the computing field." I am a member of the "CHI Academy," which is described as follows: "The CHI Academy is an honorary group of individuals who have made substantial contributions to the field of HCI. These are the principal leaders of the field, whose efforts have shaped the disciplines and/or industry and led the research and/or innovation in human-computer interaction." The criteria for election to the CHI Academy are: (1) cumulative contributions to the field; (2) impact on the field through development of new research directions and/or innovations; and (3) influence on the work of others. I have received two "Test of Time" awards from

IEEE InfoVis for my 2001 and 2002 work on visualizing hierarchies, including those containing digital photos. *See* Ex-1030; Ex-1031.

16. I have appeared on radio shows numerous times to discuss issues relating to user interface design and people's use and frustration with common technologies, web sites, and mobile devices. My work has been discussed and I have been quoted by mainstream media around the world over 120 times, including by the New York Times, the Wall Street Journal, the Washington Post, Newsweek, the Seattle Post Intelligencer, the Independent, Le Monde, NPR's All Things Considered, New Scientist Magazine, and MIT's Technology Review.

17. I have designed, programmed, and publicly deployed dozens of user-facing software products that have cumulatively had millions of users. My work is cited by several major companies, including Amazon, Apple, Facebook, Google, and Microsoft. I am a named inventor on 14 U.S. patents and 20 U.S. patent applications. The patents are generally directed to user interfaces/experience.

18. I am over 18 years of age and, if I am called upon to do so, I would be competent to testify as to the matters set forth herein. I understand that a copy of my current curriculum vitae, which details my education and professional and academic experience, is being submitted by Petitioner as Exhibit 1003. The following provides an overview of some of my experience that is relevant to the matters set forth in this declaration.

19. I received a B.S. degree in Computer Science with a minor in Electrical Engineering in 1986 from the Rensselaer Polytechnic Institute. I received M.S. and Ph.D. degrees in Computer Science in 1989 and 1992, both from New York University.

20. Based on my experience and education, I believe that I am qualified to opine as to the knowledge and level of skill of one of ordinary skill in the art at the time of the alleged invention of the ’033 Patent, as well as the state of the art at that time.

B. Materials Considered

21. In forming my opinions, I have reviewed the following documents:[1]

Ex. No.	Description
Ex-1001	U.S. Patent No. 8,588,033 (“the ’033 Patent)
Ex-1002	Declaration of Benjamin B. Bederson
Ex-1003	Curriculum Vitae of Benjamin B. Bederson
Ex-1004	Prosecution History of the ’033 Patent (Application No. 13/631,116)
Ex-1005	U.S. Patent Application Publication No. 2009/0196124 (“Mooring”)
Ex-1006	Japanese Publication No. JP2005/242456 (“Satoshi")

[1] Four-digit pin citations that begin with 0 are to the branded numbers added by Samsung in the bottom right corner of the exhibits. All other pin citations are to original page, column, paragraph, or line numbers.

Ex. No.	Description
Ex-1007	Certified English translation of Satoshi
Ex-1008	U.S. Patent Application Publication No. 2008/0186808 ("Lee")
Ex-1009	U.S. Patent Application Publication No. 2008/0168368 ("Louch")
Ex-1010	U.S. Patent Application Publication No. 2008/0151700 ("Inoue")
Ex-1011	U.S. Patent Application Publication No. 2005/0122844 ("Ruchonnet")
Ex-1012	L.C. Tam, Tom Kong, and R. Du, Physical-Based Simulation of Mechanical Watches and Clocks 1-6 (2007)
Ex-1013	Declaration of Mary K. Roach on Authentication of Publication
Ex-1014	Linux Watch, https://researcher.watson.ibm.com/researcher/view_group_subpage.php?id=6102 (last visited Sept. 29, 2023).
Ex-1015	Lam Chi Tam, Geometry-Based Simulation of Mechanical Movements and Virtual Library 1-113 (2008)
Ex-1016	Watch, https://en.wikipedia.org/wiki/Watch (last visited Oct. 1, 2023)
Ex-1017	ISBN Search, https://isbnsearch.org/isbn/0791843068 (last visited Oct. 5, 2023)
Ex-1018	Palm (PDA), https://en.wikipedia.org/wiki/Palm_(PDA) (last visited Sept. 27, 2023).
Ex-1019	L.C. Tam, Y. Fu, and R. Du, Virtual Library of Mechanical Watch Movements 127-136 (2007)
Ex-1020	Claim Mapping Table
Ex-1021	Chandra Narayanaswami et al., IBM's Linux Watch: The Challenge of Miniaturization 33-41 (2002).

Ex. No.	Description
Ex-1022	Skeleton Clock, https://en.wikipedia.org/wiki/Skeleton_clock (last visited Oct. 1, 2023)
Ex-1023	Benjamin B. Bederson & James D. Hollan, Pad++: A Zooming Graphical Interface for Exploring Alternate Interface Physics 17-26 (1994).
Ex-1024	David Rogers, Feimo Hou, Chandelle Vuolo & Benjamin B. Bederson, Tossing Objects in a Desktop Environment (1996).
Ex-1025	Benjamin B. Bederson, Fisheye Menus 217-225 (2000)
Ex-1026	Leslie E Chipman, Benjamin B. Bederson & Jennifer A. Golbeck, SlideBar: Analysis of a linear input device 1-9 (2004).
Ex-1027	Hilary Browne et al., Designing a Collaborative Finger Painting Application for Children (2000).
Ex-1028	Pekka Parhi, Amy K. Karlson & Benjamin B. Bederson, Target Size Study for One-Handed Thumb Use on Small Touchscreen Devices 203-210 (2006).
Ex-1029	Amy K. Karlson, Benjamin B. Bederson & José Contreras-Vidal, Understanding One-Handed Use of Mobile Devices 1-22 (2007).
Ex-1030	Test of Time Awards, https://ieeevis.org/year/2021/info/awards/test-of-time-awards (last visited Oct. 3, 2023).
Ex-1031	Test of Time Awards, https://ieeevis.org/year/2022/info/awards/test-of-time-awards (last visited Oct. 3, 2023).
Ex-1032	Takeo Igarashi & Ken Hinckley, Speed-dependent Automatic Zooming for Browsing Large Documents 139-148 (2000).
Ex-1033	Skeleton watch, https://en.wikipedia.org/wiki/Skeleton_watch (last visited Oct. 1, 2023)

Ex. No.	Description
Ex-1034	Laurie Kahle, All is Revealed (March/April 2016)
Ex-1035	Analog watch, https://en.wikipedia.org/wiki/Analog_watch (last visited Oct. 1, 2023)
Ex-1036	Quartz clock, https://en.wikipedia.org/wiki/Quartz_clock (last visited Oct. 1, 2023)
Ex-1037	Joshua Munchow, Here's Why The Crown Is The Unsung Hero Of Watchmaking (And Why Rolex Wears The Crown), https://quillandpad.com/2018/12/09/heres-why-the-crown-is-the-unsung-hero-of-watchmaking-and-why-rolex-wears-the-crown/ (last visited Oct. 2, 2023)
Ex-1038	U.S. Patent No. 3,146,580 ("Simon")
Ex-1039	U.S. Patent No. 3,362,154 ("Perret")
Ex-1040	Kinetics (physics), https://en.wikipedia.org/wiki/Kinetics_(physics) (last visited Oct. 2, 2023)
Ex-1041	Dynamics (mechanics), https://en.wikipedia.org/wiki/Dynamics_(mechanics) (last visited Oct. 2, 2023)
Ex-1042	Gear train, https://en.wikipedia.org/wiki/Gear_train (last visited Oct. 2, 2023)
Ex-1043	Mechanical watch, https://en.wikipedia.org/wiki/Mechanical_watch (last visited Oct. 2, 2023)
Ex-1044	Accelerometer, https://en.wikipedia.org/wiki/Accelerometer (last visited Oct. 2, 2023)

Ex. No.	Description
Ex-1045	Benjamin Arthur, Parts of a Mechanical Watch – An Illustrated Guide, https://www.benswatchclub.com/blog/parts-of-a-mechanical-watch (last visited Oct. 2, 2023)
Ex-1046	L.C. Tam, Tom Kong, and R. Du, Physical Based Solutions of Mechanical Watches and Clocks, https://asmedigitalcollection.asme.org/IMECE/proceedings-abstract/IMECE2007/43068/123/325857 (last visited Oct. 5, 2023)
Ex-1047	Declaration of Rachel J. Waters on Authentication of Publication
Ex-1048	Automatic, https://www.collinsdictionary.com/us/dictionary/english/automatic (last visited Oct. 5, 2023)
Ex-1049	Matthew Catellier, How Accurate Should Your Mechanical Watch Be?, https://www.watchreviewblog.com/how-accurate-should-mechanical-watch-be/#:~:text=A%20non%2Dcertified%20watch%2C%20meanwhile, watch%20about%20once%20a%20week (last visited Oct. 10, 2023).
Ex-1050	Pusher, https://www.watch-wiki.net/doku.php?id=pusher (last visited October 10, 2023).

II. LEGAL STANDARDS

22. In forming my opinions and considering the subject matter of the ’033 Patent and its claim in light of the prior art, I am relying on certain legal principles that counsel in this case explained to me. My understanding of these concepts is summarized below.

23. I understand that earlier publications and patents may act to render a patent unpatentable for one of two reasons: (1) anticipation, and (2) obviousness.

A. Anticipation

24. It is my understanding that the claims of a patent are anticipated by a prior art reference if each and every element of the claim is found either explicitly or inherently in the reference. I understand that inherency requires a showing that the missing descriptive matter in the claim is necessarily present in the allegedly anticipating reference, and that it would have been so recognized by a person of ordinary skill in the art ("POSITA").

25. I understand that when a challenged claim covers several structures, either generically or as alternatives, the claim is deemed anticipated if any of the structures within the scope of the claim is found in the prior art reference.

26. Although anticipation typically involves the analysis of a single prior art reference, I understand that additional references may be used to show that the prior art reference has enabling disclosure (i.e., allows a POSITA to make the invention without undue experimentation), to explain the meaning of a term used in the prior art reference, and/or to show that a characteristic is inherent in the prior art reference.

B. Obviousness

27. I understand that a claim is invalid as obvious if it would have been obvious to a person of ordinary skill in the art at the time the alleged invention was made. This means that even if all of the elements of the claim cannot be found in a single prior art reference that would anticipate the claim, a person of ordinary skill in the art who was aware of the prior art would have been able to come up with the claimed invention. This may be the case, for example, where the missing element represents only an insubstantial different over the prior art or a reconfiguration of a known system. I understand that in an obviousness determination, the person of ordinary skill in the art is presumed to have knowledge of all material prior art.

28. I understand that an obviousness analysis requires an understanding of the scope and content of the prior art, any differences between the alleged invention and the prior art, and the level of ordinary skill in evaluating the pertinent art.

29. I understand that when a product is available, design incentives and other market forces can prompt variations of it, either in the same field or a different one. If a person of ordinary skill in the art can implement a predictable variation, obviousness likely bars its patentability. For the same reason, if a technique has been used to improve one device and a person of ordinary skill in the art would recognize that it would improve similar devices in the same way, using the technique would have been obvious.

30. I understand that whether a prior art reference renders a patent claim unpatentable as obvious is determine from the perspective of a person of ordinary skill in the art at the time of the alleged invention. I have been told that there is not requirement that the prior art contain an express suggestion to combine known elements to achieve the claimed invention, but a suggestion to combine known elements to achieve the claimed invention may come from the prior art, as filtered through the knowledge of one skilled in the art. In addition, I have been told that the inferences and creative steps a person of ordinary skill in the art would employ are relevant to the determination of obviousness.

31. I understand that one may consider, e.g., whether (1) the change was merely the predictable result of using prior art elements according to their known functions, or whether it was the result of true inventiveness; (2) there is some teaching or suggestion in the prior art to make the modification or combination of elements claimed in the patent; (3) the claimed innovation applies a known technique that had been used to improve a similar device or method in a similar way; (4) the claimed invention would have been obvious to try, meaning that the claimed innovation was one of a relatively small number of possible approaches to the problem with a reasonable expectation of success by those skilled in the art; (5) the invention merely substituted one known element for another known element in order to obtain predictable results; (6) the invention merely applies a known technique to

a known device, method, or product to yield predictable results; or (7) known work in one field of endeavor may have prompted variations of it for use in either the same field or a different one based on design incentives or other market forces that would have been predictable to a person of ordinary skill in the art.

32. I further understand that certain factors may support or rebut the obviousness of a claim. I understand that such secondary considerations include, among other things, commercial success of the patented invention, skepticism of those having ordinary skill in the art at the time of the invention, unexpected results of the invention, any long-felt but unsolved need in the art that was satisfied by the alleged invention, the failure of others to make the alleged invention, praise of the alleged invention by those having ordinary skill in the art, and copying of the alleged invention by others in the field. I understand that there must be a nexus—that is, a connection—between any such secondary considerations and the alleged invention. I also understand that contemporaneous and independent invention by others is a secondary consideration tending to show obviousness.

33. I am not aware of any allegations by the named inventor of the ’033 Patent or any assignee of the ’033 Patent that any secondary considerations tend to rebut the obviousness of the ’033 Patent.

34. Additionally, I understand that in considering obviousness, it is important not to use the benefit of hindsight derived from the patent under consideration.

C. Level of Ordinary Skill in the Art

35. When interpreting a patent, I understand that it is important to identify the relevant art pertaining to that patent, as well as the level of ordinary skill in that art at the time of the claimed invention. The "art" is the field of technology to which the patent is related.

36. I am informed and understand that the POSITA is a hypothetical person who is presumed to know the relevant prior art. I understand that the actual inventor's skill is not determinative of the level of ordinary skill. I further understand that factors that may be considered in determining level of skill include: (i) the types of problems encountered in the art; (ii) prior art solutions to those problems; (iii) the rapidity with which innovations are made; (iv) the sophistication of the technology; and (v) the educational level of active workers in the field. I understand that not all such factors may be present in every case, and one or more of them may predominate.

37. I understand that a POSITA is one who is presumed to be aware of all pertinent art, thinks along conventional wisdom in the art, and is a person of ordinary creativity. A POSITA would have had knowledge of circuit boards and

microcircuits, including components thereof, and related technologies as of March 30, 2010.

38. A person of ordinary skill in the art at the relevant time ("POSITA") would have had a bachelor's degree in electrical engineering, computer science, computer engineering, or a related field, and two-to-three years of experience in the research, design, development, or testing of touchscreen applications and graphical user interfaces for mobile devices, with additional education substituting for experience and vice versa.

39. Based on my education and experience, I would have, at least, met the criteria for a POSITA on March 30, 2010, and I still exceed it today.

D. Claim Construction

40. I understand that the United States Patent and Trademark Office interprets claim terms in an *inter partes* review proceeding under the same claim construction standard that is used in a United States federal court. I understand that under this standard, the meaning of claim terms is considered from the viewpoint of a POSITA at the time of the alleged invention.

41. I have been informed that claim terms are generally given their ordinary and customary meaning as understood by one of ordinary skill in the art in light of the specification and the prosecution history pertaining to the patent. I understand,

however, that claims terms are generally not limited by the embodiments described in the specification.

42. I understand that in addition to the claims, specification, and prosecution history, other evidence may be considered to ascertain the meaning of claim terms, including textbooks, encyclopedias, articles, and dictionaries. I have been informed that this other evidence is often less significant and less reliable than the claims, specification, and prosecution history.

III. SUMMARY OF GROUNDS

43. I understand that Petitioner challenges the validity of Claims 1-19 of the ’033 Patent. In particular, I understand that Petitioner asserts the following grounds for challenging the claims of the ’033 Patent:

Ground	Summary
1	Claims 1 and 11-14 are obvious over Mooring (Ex-1005) in view of Satoshi (Ex-1007).[2]
2	Claims 2-3, 17 and 19 are obvious over Mooring and Satoshi in further view of Lee (Ex-1008).

[2] Ex-1006 is a copy of Satoshi; Ex-1007 is a certified translation of Satoshi.

Ground	Summary
3	Claims 13-16 are obvious over Mooring and Satoshi in further view of Louch (Ex-1009).
4	Claims 4-5 are obvious over Mooring and Satoshi in further view of Inoue (Ex-1010) and Tam (Ex-1012).
5	Claims 6-10 and 13 are obvious over Mooring and Satoshi in further view of Tam and Ruchonnet (Ex-1011).
6	Claim 18 is obvious over Mooring and Satoshi in further view of Lee, Tam, Inoue, and Ruchonnet.

IV. THE '033 PATENT

A. Overview of the '033 Patent

44. The '033 Patent, titled "Wristwatch with Electronic Display," is directed to simulating mechanical watch movement on the electronic display of a wristwatch.

45. The patent acknowledges that, in general, people enjoy the appearance of a mechanical watch movement with clock hands and that people are fascinated by the inner workings of a mechanical watch. Ex-1001, 1:35-46.

46. Figure 4, which is replicated on the cover of the patent, shows an example of a simulated mechanical watch movement including a minute hand and hour hand indicating the time as well as several gears.

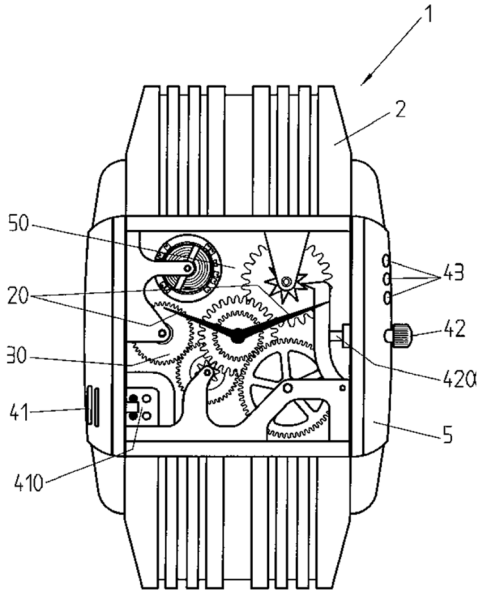

47. Claims 1-19 all require an electronic display simulating a mechanical watch movement that indicates the time.

48. Independent Claims 1 and 16 require reproducing on an "electronic display a simulation of a mechanical watch movement" that "indicate[s] the time." Independent Claim 17 is similar. It requires "displaying on an electronic display of [sic] a simulated mechanical watch movement" with "time indicators."

49. Independent Claims 1, 16, and 17 also require that the simulated mechanical watch movement include a "gear train." In general, a gear train is a machine element of a mechanical system formed by mounting gears on a frame so

the teeth of the gears engage. *See* Ex-1043. In this context, a gear train simply refers rotating gears like the ones shown in Figure 4 above. *See* Ex-1044.

50. The ’033 Patent states that mechanical watches have long displayed their inner working components. Ex-1001, 1:35-46. And it also admits it was already well-known that electronic watches with quartz oscillators could present the time using an electronic display, such as a liquid crystal display (LCD). *Id.*, 1:21-27.

51. As described above, all the concepts described by the patent are well-known and there is no support for the patent’s suggestions that showing the inner workings on an electronic display is somehow inventive and patentable. *Id.*, 2:33-39. As explained in detail below, the ’033 Patent claims are obvious in view of the prior art.

B. Prosecution History of the ’033 Patent

52. I understand the ’033 Patent was filed September 28, 2012, as a continuation of International Patent Application PCT/EP2011/054873 filed March 30, 2011. Ex-1001. I also understand it claims priority to Swiss Patent Application CH2010/0463, filed on March 30, 2010. Ex-1001.

53. I understand the prior art relied on in this Declaration was not before the USPTO during prosecution of the ’033 Patent, with one exception—Lee. Ex-1001, Cover. However, my analysis relies on Lee for only a few of the dependent

claims and I understand the examiner did not rely on that reference. As such, I understand that this Declaration presents substantially new arguments that were not considered during prosecution.

V. TECHNOLOGY BACKGROUND

54. To provide background for the element-by-element analysis of the claims to follow, below I present an overview of the state of the art existing at the time of the alleged invention relating to touch screen interfaces, digital watches, and simulating a mechanical watch that displays time, among other relevant technology. As I will describe below from a high-level functional perspective, in the next section based on specific prior art, and then in subsequent sections on a limitation-by-limitation basis, all of these technologies and techniques were well-known to those of ordinary skill in the art at the time of the alleged invention claimed in the ’033 Patent, and a POSITA would have readily understood Claims 1-19.

A. Touchscreen Interfaces

55. Using a touchscreen as an interface element on a mobile electronic device was well known by the time the ’033 Patent was filed. As one example, the Palm PDA was a small portable device in wide use in the early 2000s time frame that allowed a user to interact with various applications using a graphical user interface displayed on a touch-sensitive high-resolution LCD screen. Ex-1018. Shown below, for example, is the Palm TX from 2005. *Id.*

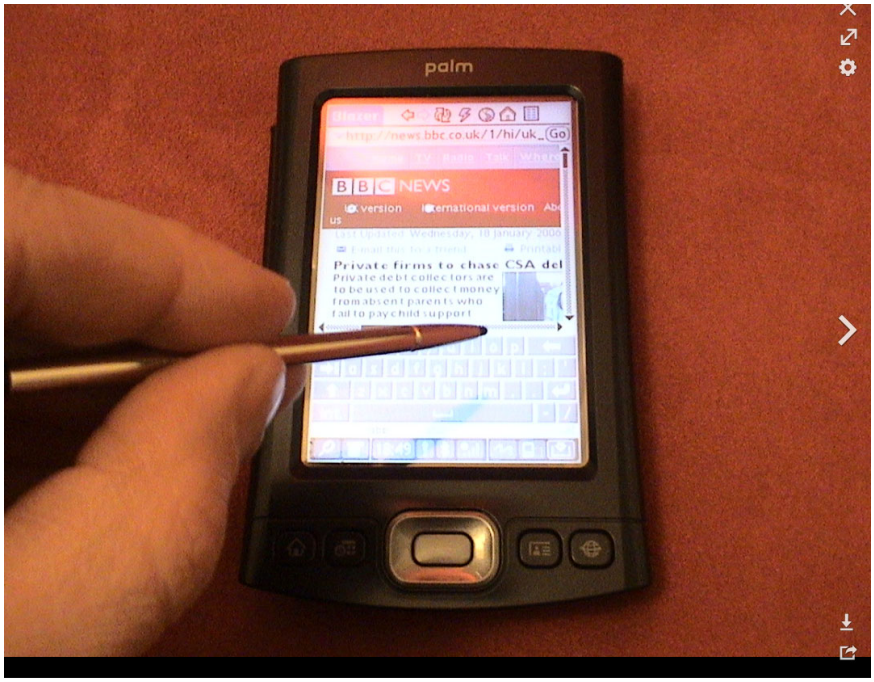

The Palm TX from 2005 More details

56. On devices such as the one shown above, a user could make gestures such as taps, double taps, drags, and similar motions using a stylus or a finger to interact with applications such as calendars, agendas, and on some models, web browsers, email clients, and telephone dialers. *Id.*

B. Touchscreen Interfaces on Wristwatches

57. Such touchscreen interfaces were not limited to handheld devices. For example, by 2001, IBM had introduced a prototype wristwatch with a touch-sensitive digital matrix LCD screen running the Linux operating system, as shown below. Ex-1008; Ex-1021.

58. The IBM Linux watch was a highly capable device and included a "touch sensitive LCD display 96x120 pixels" and a powerful processor capable of running the Linux operation system version 2.2 and supporting X11 R6 graphics. Ex-1008, p. 2-3. IBM reported that the "watch will provide users with calendar, address book, and to-do list functions." *Id.*, p. 2. As IBM stated in a 2002 IEEE article about the Linux watch, "Our work has convinced us that a lot of functionality can be squeezed into small devices." Ex-1021, p. 9. Thus, by the early 2000s, a POSITA would have understood that adapting capable touch-screen interfaces for use in the form factor of a watch was not only possible but had also been successfully achieved.

59. This knowledge is also reflected in patents from that time period. For example, U.S. Patent No. 8,344,998 ("Fitzgerald"), with an early 2008 priority date, describes a small electronic watch with a "body 16 that houses a plurality of layers, including an integrated display 18 (which may be a touchscreen) and a movement subassembly 20, for displaying information, including time." Ex-1014, 3:21-25.

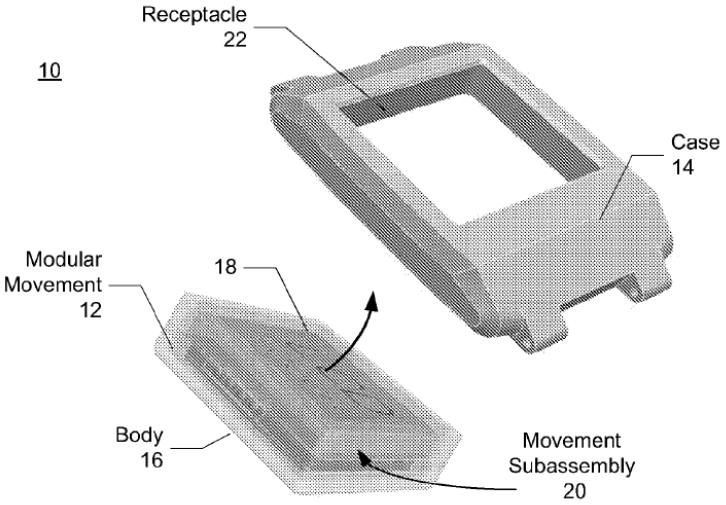

FIG. 1A

60. It was also well known in the art in the early 2000s to use a scrolling user interface to switch between active applications or to select an application to execute on a mobile device. For example, U.S. Patent Publication No. 2008/0168368 to Louch discloses a watch with a touchscreen that can display a plurality of "widgets," which are graphical user interface elements that allow a user to interact with an application. Ex-1005 ¶7; Fig. 1F (below).

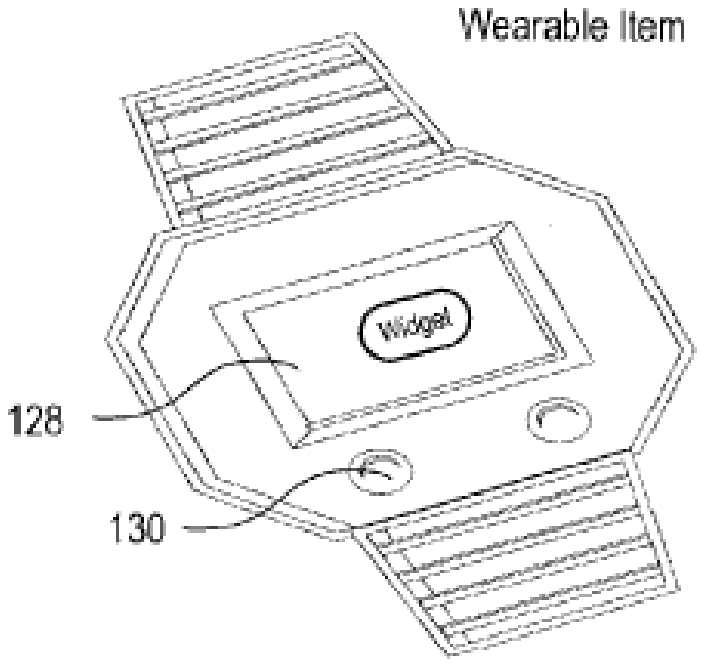

FIG. 1F

61. To select a desired application, "widgets are scrolled across the display area" "using a finger or stylus." *Id.* ¶79. In some embodiments, "the user can make a single touch and gesture and widgets will be continuously scrolled by the display 514 in a Rolodex® manner and slowly de-accelerate to a stop." *Id.* ¶87.

62. As another example, U.S. Patent Publication No. 2009/0199130 to Tsern discloses a wristwatch with a touch-sensitive screen. Ex-1022 ¶14. The watch screen can display a scrollable set of icons representing available applications. *Id.* ¶18. Shown in Figure 3 below is "a swipe operation from anywhere on the right side of the display 102 to the left side of the display 102" that causes "application icons

[to] move from one end of the display (from the right side in the embodiment illustrated) to another end." *Id.* ¶18, Fig. 3.

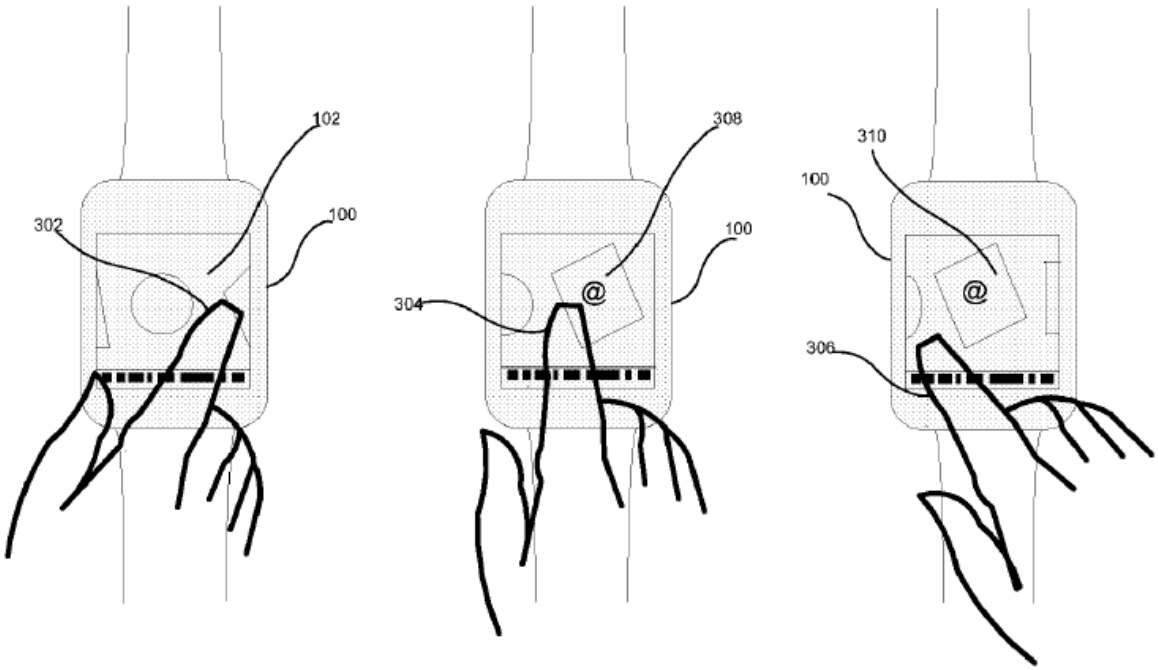

FIG. 3

63. Thus, by the time the '033 Patent was filed, a POSITA would have been familiar with the concept of using finger gestures on the touchscreen of a watch to scroll through multiple graphical user interfaces for various applications that perform different functions. The specific art I discuss below demonstrates that all of the '033 Patent's claims were obvious.

C. Simulations of Mechanical Watch Components

64. It was well-understood by the mid-2000s that one could simulate and display various mechanical designs and processes on a digital interface using

computer-aided design (CAD) tools. Many of these simulations were even made available to the public in online databases.

65. For example, the Virtual Library of Mechanical Time Pieces is an online database containing different kinds of mechanisms used in mechanical watches and clocks. Ex-1019. Exhibit 1019 explains:

> The virtual library is a multi-functional tool that benefits many users. First, it can be used as an educational tool for mechanical engineering students and vocational school students who wish to study different kinds of mechanical watch movements. Second, it acts as an online library for general public to search information about escapements and some well-known horologists. Last but not the least, it helps watchmaker to diagnose the design and assembly error when building a mechanical watch movement. Recently, we received an inquiry from a clock manufacturing company on validate their design. Using the data they provided, we constructed a 3D CAD as shown in Figure 17. Then, we run a simulation step by step to visualize the operation of the design. We also analyze the effect of the manufacturing/assembly tolerance.

Ex-1019, p. 135. As shown in this 2007 article, the library simulated internal mechanical clock parts and their operation and also displayed the operation of those internal parts.

66. Similarly, Lam Chi Tam's Master's thesis, entitled "Geometry-Based Simulation of Mechanical Movements and Virtual Library," explains that the internal operation of mechanical clocks fascinates and attracts the attention of

"millions of people around the world." Ex-1015, Abstract. The thesis describes three-dimensional computer-aided design (CAD) models, drawn in exact dimensions, to demonstrate the working of those mechanisms. *Id*. An exemplar model is shown below in Figure 19.

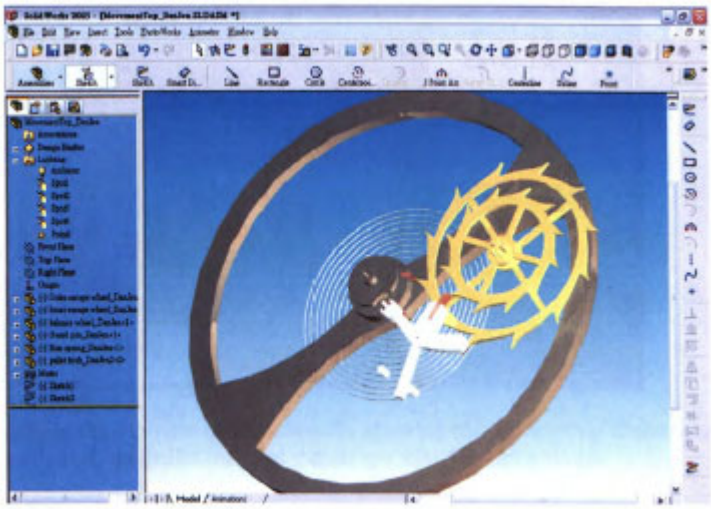

Figure 19: The model of Daniels Co-Axial Double-Wheel Escapement.

67. Tam's thesis also presents simulations of winding system including interworking gears, as shown below in Figures 49(a) and (b).

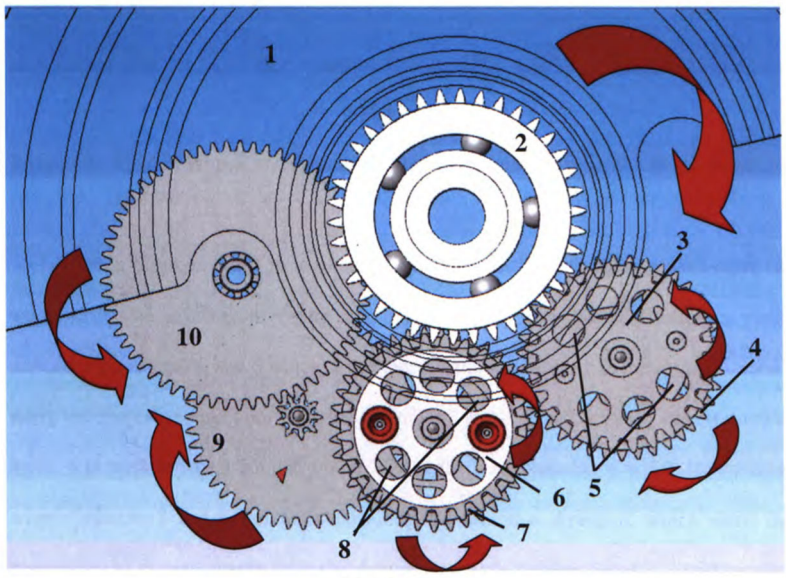

(a) Front side

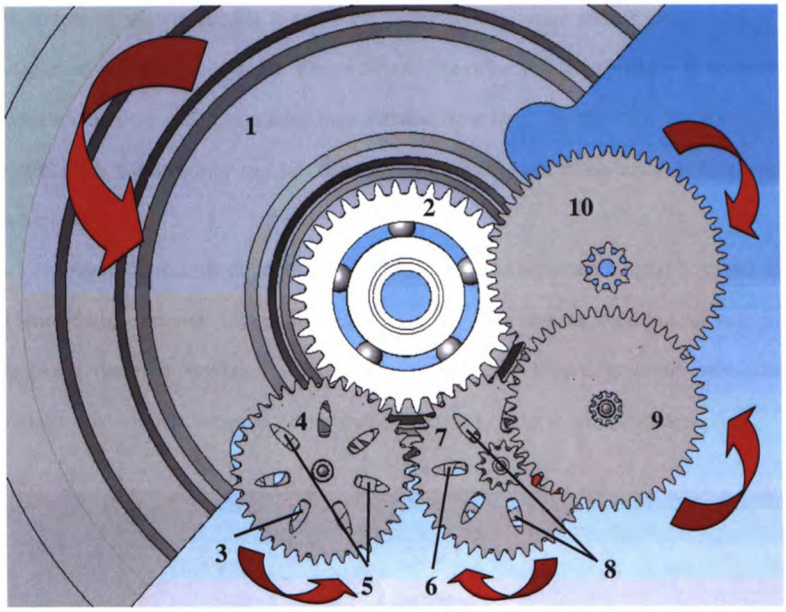

(b) Back side

Figure 49: "Double Wheels and Pinions System" when rotor turns in clockwise direction.

Ex-1015, pp. 61-62.

68. Thus, by the time the '033 Patent was filed, a POSITA would have been familiar with the concept of showing various displays on the touchscreen of a watch,

interacting with the displayed application via the touchscreen, and switching between available displays/applications. Moreover, a POSITA would have known it would be possible to accurately simulate and display mechanical movements, such as the various parts of a mechanical watch, on a digital interface. The specific art I discuss below demonstrates that all of the '033 Patent's claims were obvious.

VI. THE PRIOR ART IN THE APPLIED INVALIDITY GROUNDS

A. Mooring (Ex-1005)

69. Mooring, titled "Modular Movement That is Fully Functional Standalone and Interchangeable in Other Portable Devices," was published on August 6, 2009. Ex-1005, Cover.

70. I understand Mooring is prior art under at least 35 U.S.C. §102(a) and (e).

71. As shown in Figures 7 and 8, Mooring discloses a wristwatch. Ex-1005 ¶22.

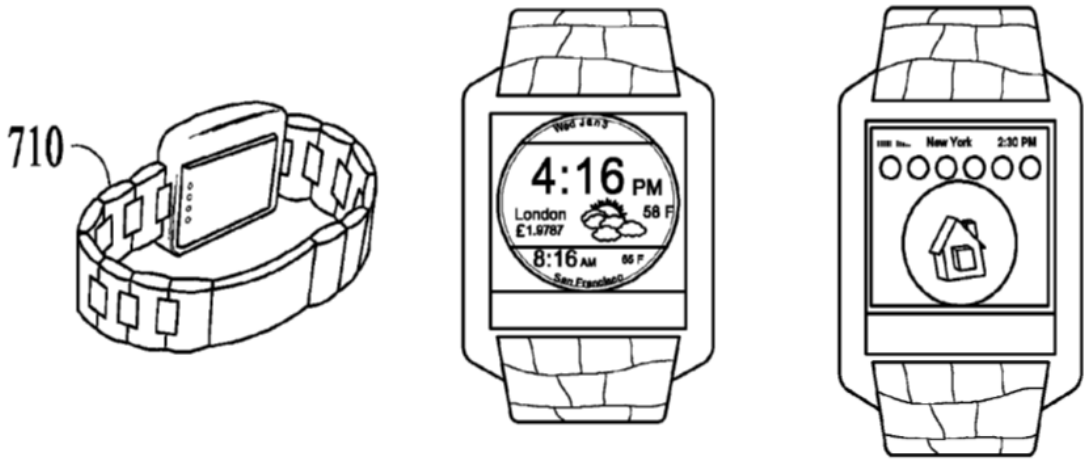

72. Mooring also includes an electronic movement (orange) and a case (blue), illustrated by Figures 1B and 1C.

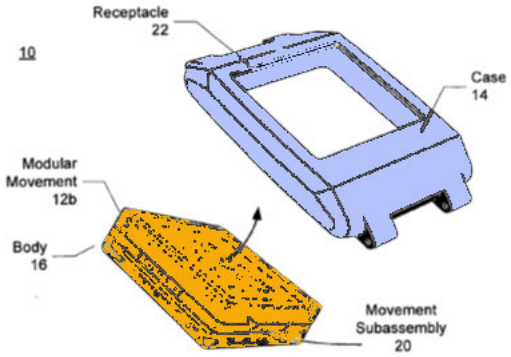

FIG. 1B

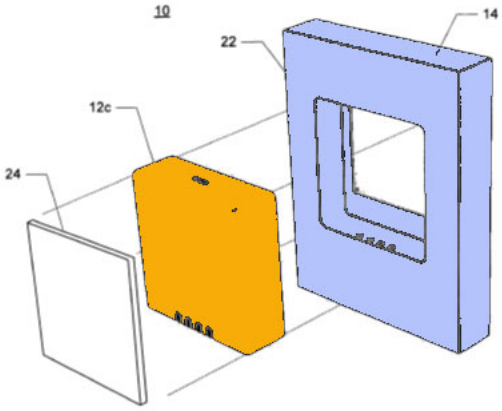

FIG. 1C

Ex-1005, Figs. 1B-C (annotated).

73. As shown in Figure 5, Mooring's electronic movement includes an LCD touchscreen 506 (yellow) and printed circuit board (PCB) 504 (green). *Id.* ¶39.

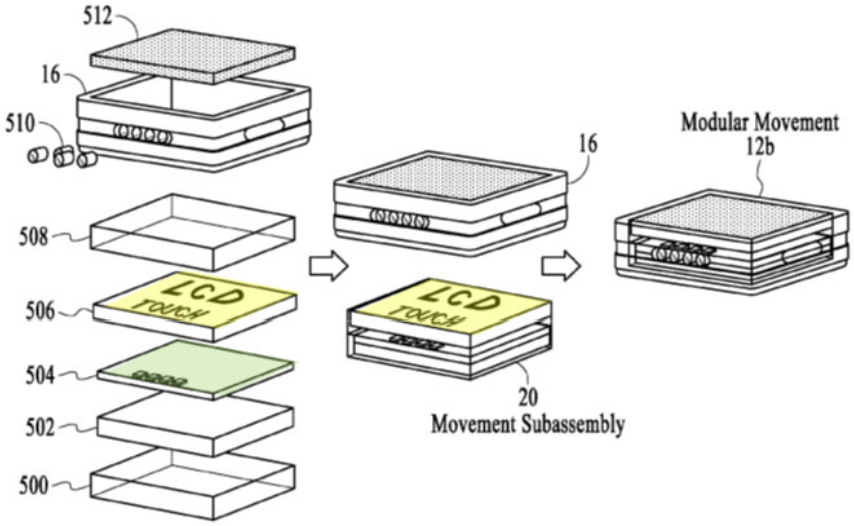

FIG.5

Ex-1005, Fig. 5 (annotated).

74. Figure 6 shows the parts on the PCB.

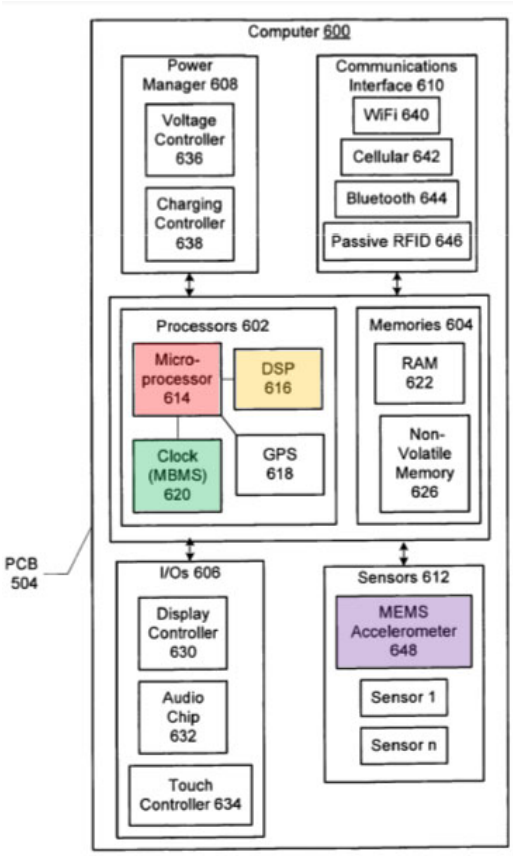

FIG. 6

Ex-1005, Fig. 6 (annotated). Those parts include a microprocessor 614 (red), a digital signal processor (DSP) 616 (orange), a clock 620 (green), and a MEMS accelerometer 658 (purple).

75. Microprocessor 614 and/or DSP 616 execute software to control various processes, including the operation of the touchscreen. *Id.* ¶57.

76. Clock 620 includes a "quartz crystal oscillator," the vibrations of which the watch uses to track time. *Id.* ¶¶3, 58.

77. The "MEMS accelerometer 648 [purple] may be used to measure information such as position, motion, tilt, shock, and vibration for use by microprocessor 614." *Id.* ¶65.

B. Satoshi (Ex-1007)

78. Satoshi, titled "Rotating Body Image Display Device and Rotating Body Image Display program," was published on September 8, 2005. I understand Ex-1007 is a certified translation of Satoshi, while Ex-1006 is the original Japanese Patent Office document.

79. I understand Satoshi is prior art under at least 35 U.S.C. §102(b).

80. Satoshi discloses a LCD that simulates a mechanical watch movement. Ex-1007 ¶¶4, 11.

81. More specifically, Satoshi describes displaying a "skeleton clock" by showing the "the rotation of an hour hand, minute hand, and second hand in hour, minute, and second units respectively." *Id.* ¶4.

82. A POSITA would have understood that a "skeleton clock" is a clock that display its internal working components, as illustrated by the figure below. Ex-1022.

83. The parts most commonly showcased by a skeleton design are those exhibiting either the most movement or the most attractive design. *Id.* These may include, but are not limited to the escapement, balance wheel and balance spring, mainspring, and tourbillon. *Id*.

84. A POSITA would have also understood that a skeleton clock includes skeleton wristwatches. *Id.* ("A skeleton clock is any clock or ***wristwatch***, though typically mechanical in nature, in which the parts that usually conceal the inner workings of the mechanism have been removed or significantly modified so as to display these inner parts."). A skeleton watch also shows its internal components, as shown below:

Ex-1034.

85. Consistent with this understanding of a skeleton clock, Satoshi describes that the display can include an animation of interactive gears that the user can arrange in various combinations. Ex-1007 ¶4. As shown in Figure 5L, hour hand 9a, minute hand 9b, and second hand 9c may rotate in correspondence with the rotating gears.

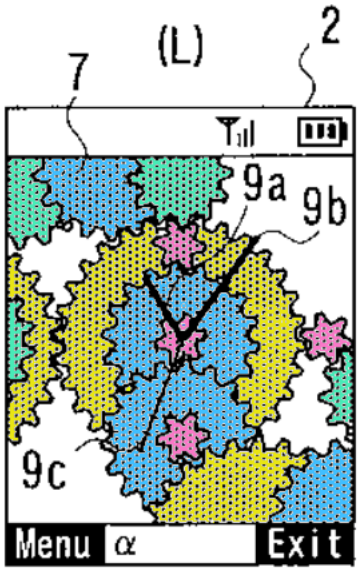

Ex-1007, Fig. 5L (annotated).

86. In describing Figure 5L, Satoshi states: "hands 9 (illustrated in FIG. 5) can be displayed integrally rotating with arbitrary gears in addition to the gears 7, and by adjusting a rotation rate of a gear serving as a driving gear, a gear ratio of gears meshing together, and the like, ***movement of an hour hand 9a, a minute hand 9b, and a second hand 9c of a clock such as depicted in FIG. 5(L) can be replicated***." Ex-1007 ¶42.

87. Because the movement of the gears determines the movement of the clock hands, a POSITA would have understood that Satoshi is describing more than a mere animation; it is a simulation of a mechanical clock.

88. Also, because the gears determine the movement of the clock hands, the time indicated by the clock hands may not match the time determined by the mobile device's more precise clock computer. Thus, Satoshi discloses that, based on a user input, the device may read the time from the clock function of the mobile device and set the angle of the hour, minute, and second hands based on the time read from the mobile device's clock function. Ex-1007 ¶87. A POSITA would have understood that the time read from the clock function of the mobile device is likely more accurate and more precise than the time determined by the gear movement.

C. Lee (Ex-1008)

89. Lee, titled "Electronic Device with a Touchscreen Displaying an Analog Clock," was published on August 7, 2008.

90. I understand Lee is prior art under at least 35 U.S.C. §102(b).

91. Like Mooring, Lee is also directed to clocks displayed on touchscreen LCD. Ex-1008 ¶¶2, 5. Figure 4 shows a clock including hour hand 21, minute hand 22, and second hand 23. *Id.* ¶44.

FIG. 4

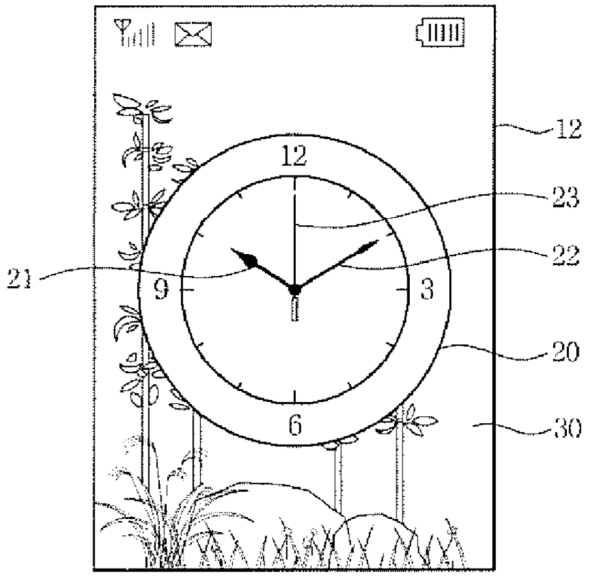

92. As shown in Figures 6 and 7, a user may touch and adjust the location of hour hand 21 and minute hand 22. *Id.* ¶47.

FIG. 6

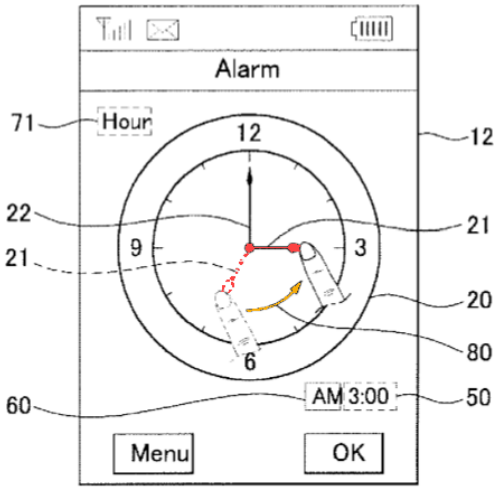

FIG. 7

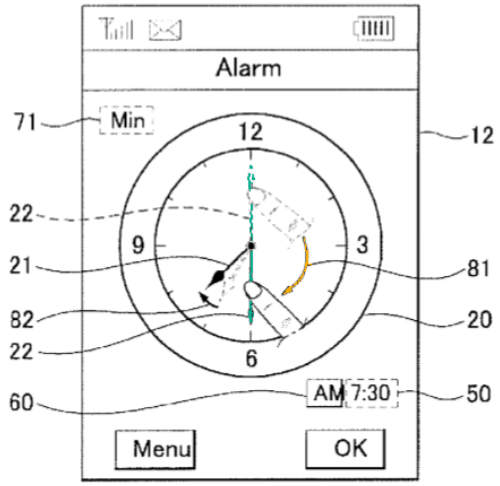

Ex-1008, Figs. 6-7 (annotated).

D. Louch (Ex-1009)

93. Louch, titled "Dashboards, Widgets, and Devices," was published on July 10, 2008. Ex-1009, Cover.

94. I understand Louch is prior art under at least 35 U.S.C. §102(b).

95. Louch discloses "a digital watch" with a touch sensitive display area 128 that can display a dashboard/widget, as shown in Figure 1F. *Id.* ¶49.

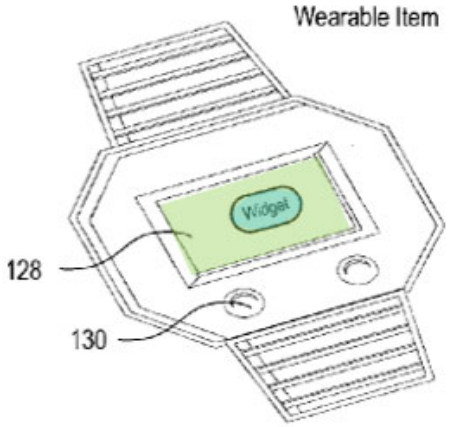

FIG. 1F

Ex-1005, Fig. 1F (annotated).

96. Louch explains that that a widget "can consume the entire display area 406 or a portion thereof." *Id.* ¶67.

97. Louch also teaches a user can move a finger horizontally or vertically across the touchscreen to scroll through available widgets to find a desired widget, as shown in Figure 5B. *Id.* ¶¶79, 80.

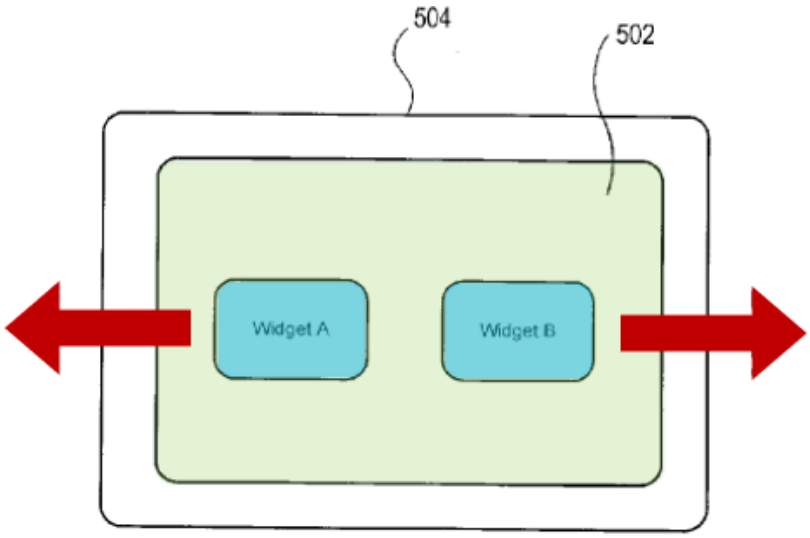

FIG. 5B

Ex-1009, Fig. 5B (annotated).

E. Inoue (Ex-1010)

98. Inoue, titled "Dial Indicator Display Device," was published on June 26, 2008.

99. I understand Inoue is prior art under at least 35 U.S.C. §102(b).

100. As shown in Figure 1, Inoue discloses a wristwatch with LCD display 20 (yellow) for showing time. Ex-1010 ¶¶15, 111, 116.

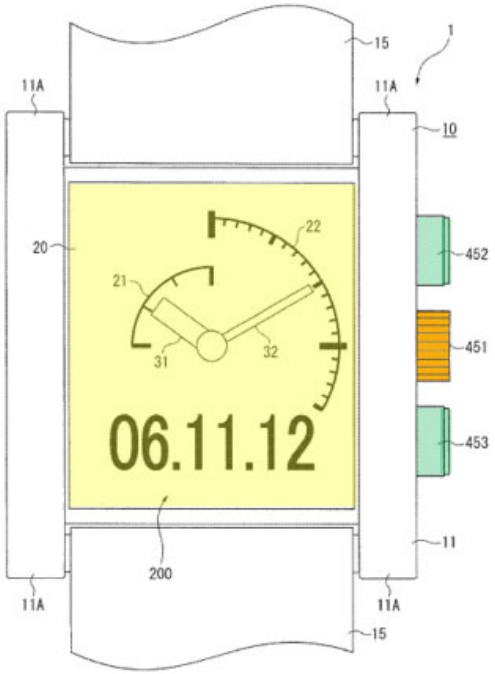

FIG. 1

Ex-1010, Fig. 1 (annotated).

101. Inoue further discloses that such a wristwatch may include crown 451 (orange) and push-buttons 452 and 453 (green) as input devices for changing the

information displayed on the LCD. *Id.* ¶¶126, 159, 294. Crown 451 and push-buttons 452 and 453 can be "located on the side of the timepiece body 10," as shown in Figure 1. *Id.* ¶126.

F. Ruchonnet (Ex-1011)

102. Ruchonnet, titled "Clockwork Movement for a Wristwatch," was published on June 9, 2005. Ex-1011, Cover.

103. I understand Ruchonnet is prior art under at least 35 U.S.C. §102(b).

104. As illustrated by Figure 4, Ruchonnet describes a mechanical watch with various internal components.

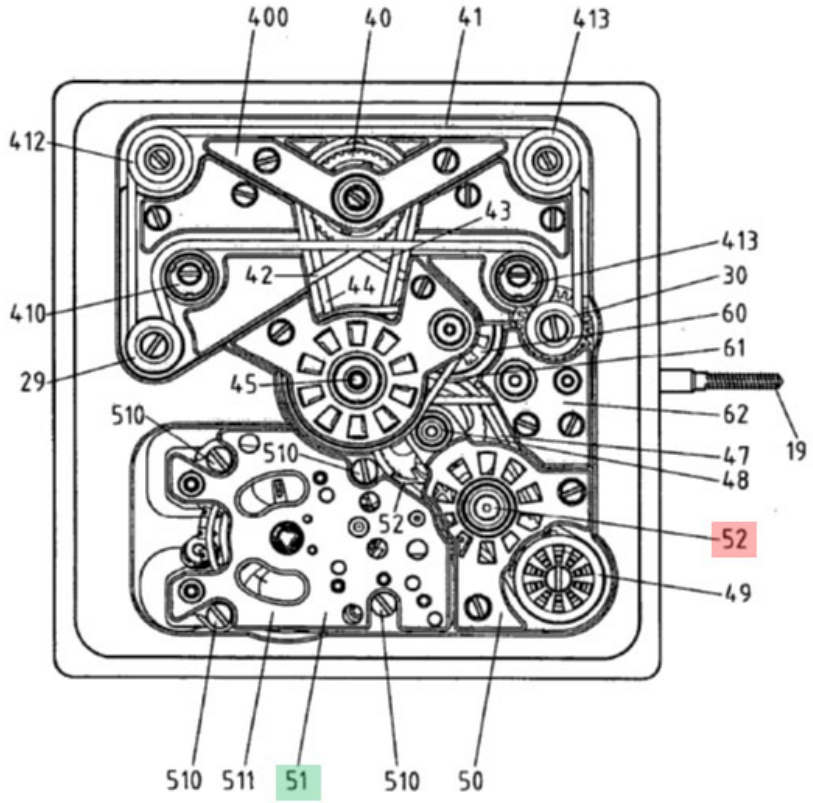

Ex-1011, Fig. 4 (annotated).

105. Ruchonnet states that regulating organ 51 (green) "compris[es] an escapement and a sprung balance that determine the watch's running." *Id.* ¶4. And it explains "regulating organ 51 can be conventional, karussel, tourbillon or even electronic and comprises in this example an escapement 52 [red] of which a portion is visible in FIG. 4." *Id.* ¶44. Ruchonnet also describes other internal components not shown above, such as a "gear train" (Ex-1011 ¶¶4, 43), and an "oscillating mass" (*id.* ¶35).

106. Ruchonnet states that the wristwatch may be a "skeleton-type" watch in which the dial is glass or transparent material so that an observer "to check the movement's running." *Id.* ¶31.

G. Tam (Ex-1012)

107. Tam, titled "Physical-Based Simulation of Mechanical Watches and Clocks," was presented at the 2007 ASME International Mechanical Engineering Congress and Exposition in Seattle, Washington on November 11-15, 2007. It was also published as part of those proceedings at least as early as April 17, 2008, on which date I understand Tam was cataloged at the University of Kansas Libraries. Ex-1013 (Roach Declaration); Ex-1017. I also understand it was cataloged at the University of Wisconsin-Madison Libraries on July 10, 2008. Ex-1047 (Watters

Declaration). Alternatively, ASME's website states Tam was published online on May 22, 2009. Ex-1046. I understand Tam is prior art under 35 U.S.C. §102(b).

108. As identified in its title, Tam teaches "Physical-Based Simulation of Mechanical Watches and Clocks." Ex-1012, p. 1. In its introduction, Tam states the intricate mechanical operation of watches "fascinate[s] millions of people around the world." *Id.* Capitalizing on this fascination, Tam teaches simulating and displaying internal mechanical watch components, such as the Swiss lever escapement (the most popular escapement for mechanical watches). *Id.*

109. Tam teaches simulating the "kinetics" and "dynamics" of the internal watch components. Ex-1012, p. 1. As stated in Wikipedia, kinetics is "the branch of classical mechanics that is concerned with the relationship between the motion and its causes, specifically, forces and torques." Ex-1041. And as stated in Wikipedia, dynamics is similarly "the branch of classical mechanics that is concerned with the study of forces and their effects on motion." Ex-1042.

110. Tam's simulation calculates the forces placed on the simulated internal watch components. For example, Tam simulates the movement of a Graham escapement. Ex-1012, p. 2. This escapement includes a pendulum, which "requires a push to jump start." *Id.*

111. A POSITA would have understood that Tam calculates the force of the push and the force of gravity to simulate the movement and position of the

pendulum. As another example, Tam states that for the Swiss lever escapement simulation, "a force input is added on the balance wheel to simulate the effect of hairspring." Ex-1012, p. 4.

112. As shown below in Figure 7, Tam further teaches displaying the simulated watch components.

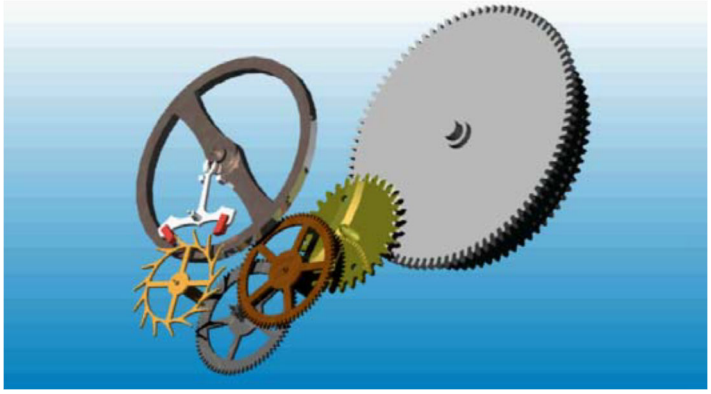

VII. CLAIM CONSTRUCTION

113. In my opinion, there are two claim terms in the '033 Patent that require construction. One claim term is in dependent Claim 10, and the other in in dependent Claim 12. I address those two terms in the subheadings below.

114. Other than those two terms from Claims 10 and 12, I do not believe that the remaining claim terms require construction for the purposes of resolving the issues in this Declaration. I apply the plain and ordinary meaning to the rest of the claim terms, as that plain and ordinary meaning would have been understood by a POSITA.

115. I reserve the right to offer opinions on any claim constructions proposed in this proceeding or to offer opinions on additional constructions in the district court.

A. Claim 10: "means for modifying the running of said displayed regulating organ according to the accelerations to which the watch is subjected."

116. The first limitation that I understand requires construction appears in Claim 10: "means for modifying the running of said displayed regulating organ according to the accelerations to which the watch is subjected." This limitation uses the phrase "means for" and I understand it is presumed to invoke 35 U.S.C. §112(6). I understand that these types of limitation are sometimes referred to as "means-plus-function" limitations.

117. I understand that interpreting a means-plus-function limitation involves two steps: (1) identifying the recited function and (2) identifying the structure disclosed in the specification for performing the recited function.

118. The recited function for this means-plus-function limitation is "modifying the running of said displayed regulating organ according to the accelerations to which the watch is subjected."

119. Based on the specification of the '033 Patent, this function is implemented by software on a microcontroller. Ex-1001, 5:29-42. For a computer-implemented claim limitation, I understand the corresponding structure is a

processor running the algorithm disclosed in the specification for performing the claimed specific computer function or equivalents. Based on column 3, lines, 31-66, the closest algorithm described in the specification is:

(1) assigning a virtual mass to the regulating organ (Ex-1001, 3:43-45);

(2) calculating the forces to which the regulating organ is subjected according to the measured accelerations and any change in the position of the regulating organ due to those forces (*id.*, 3:45-47); and

(3) displaying the new position of the regulating organ (*id.*, 3:47-48).

120. Thus, I understand that this three-step algorithm or equivalents is the corresponding structure for Claim 10.

B. Claim 12: "means for entering and executing a request for said synchronization by the user."

121. The second limitation that I understand requires construction appears in Claim 12: "means for entering and executing a request for said synchronization by the user." This limitation uses the phrase "means for," and I understand it is presumed to invoke 35 U.S.C. §112(6).

122. For this limitation, the recited function is "entering and executing a request for said synchronization by the user."

123. The structure for performing this function is the push-buttons 41 or touch sensor described in the '033 Patent at column 8, lines 44-49:

> In one embodiment, the time displayed by the simulated and displayed mechanical movement is thus synchronized with the quartz time, either automatically at regular intervals or when the difference exceeds a threshold or manually by the user interacting on one of the push-buttons 41 or on the touch sensor.

124. Figure 2, shown below, identifies push-buttons 41 on the side of the wristwatch.

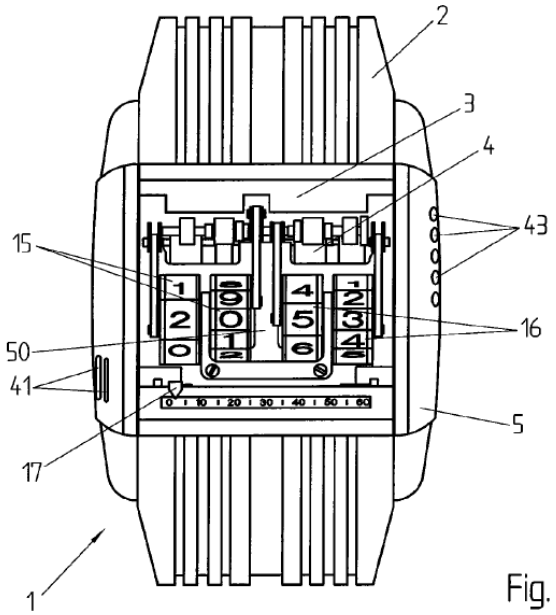

Fig. 2

125. The above excerpt from the specification describes two synchronization modes—one automatic and the other manually by the user. The manual synchronization mode is the one relevant to the recited function since it is performed "by the user." So, the disclosed structure that is necessary for performing "synchronization by the user" is "one of the push-buttons 41" or "the touch sensor,"

or their equivalents. Push buttons 41 and touch-sensitive display screen 4 (the touch sensor) are depicted in Figure 2, above.

VIII. DETAILED EXPLANATION OF THE UNPATENTABILITY GROUNDS

A. Ground 1: Claims 1 and 11-14 are obvious over Mooring in view of Satoshi.

1. A POSITA would have been motivated to combine Mooring and Satoshi's teachings and would have had a reasonable expectation of success.

126. A POSITA would have been motivated to combine the teachings of Mooring and Satoshi and would have had a reasonable expectation of success in doing so because each relates to the same well-known technologies. Both references are directed to clocks displayed on digital interfaces. Ex-1005 ¶¶22, 39; Ex-1007 ¶4. And both references also describe electronic movements with LCD display screens. Ex-1005 ¶4; Ex-1007 ¶¶2-4.

127. Mooring discloses a wristwatch with an LCD touchscreen capable of displaying hour and minute hands in an analog representation of time. Ex-1005 ¶¶22, 39. Satoshi also similarly describes a LCD with the ability to display analog time using hour and minute hands. Ex-1007 ¶¶4, 11. And Satoshi further discloses displaying a plurality of interconnected gears (i.e., a gear train) that rotate in correspondence with the watch hands. *Id.* ¶4.

128. A POSITA would have been motivated to apply the teachings of Satoshi to the wristwatch of Mooring to display various interconnecting gears (i.e., a gear train) that rotate in conjunction with watch hands as in a mechanical watch. As expressly stated in the '033 Patent, it was already known that users enjoy seeing the mechanical movement and other inner working of a mechanical watch. Ex-1001, 1:35-46. Indeed, skeleton clocks have existed since at least the 1800's. Ex-1022. And skeleton watches have amazed people since the mid-18th century. Ex-1035 ("The spectacle of seeing into the works of a watch has enticed enthusiasts since André Charles Caron, clockmaker to France's Louis XV, came up with the skeleton, or open-worked, concept in the mid-18th century.") A POSITA would have been well-aware that consumers are attracted to watches that reveal their gears and other inner workings. Also teaching this motivation, Satoshi states that the operable gears that it describes with clock hands "enhance user interest." Ex-1007 ¶4. Because consumers are interested in seeing the inner workings of mechanical watches and attracted to these type of skeleton watches, design incentives and market forces would have motivated a POSITA to apply the teachings of Satoshi to Mooring.

129. Satoshi also teaches that the rotation rate of the driving gear and gear ratios determines the corresponding movement of the displayed watch hands. Ex-1007 ¶¶4, 42. And it explains that the user can request to set the watch hands to the current clock time of the device. *Id*. ¶87. Because the clock in Mooring is based

on a quartz oscillator (Ex-1005 ¶¶3, 39, 58), it would have been obvious to a POSITA that this user request to set the clock hands to the current time would result in synchronizing the time displayed by the watch hands with the clock time based on the quartz oscillator. A POSITA would have understood that the time determined by the quartz oscillator is more precise and thus more accurate than the time determined by the gear mechanism. Thus, a POSITA would have been motivated to implement the ability to synchronize the time determined by the gear mechanism with the internal time determined by the quartz oscillator.

130. A POSITA would have had a reasonable expectation of success in combining Mooring and Satoshi because they would have understood that different watch or clock format displays are interchangeable and both use similar conventional processors and displays.

131. A POSITA would have understood that these references disclose interrelated teachings based on routine technologies that would have been amenable to various well-understood and predictable combinations.

2. Independent claim 1

a. Element 1[pre]: Wristwatch comprising:

132. In my opinion, Mooring teaches the preamble of Claim 1, to the extent it is limiting.

133. As shown in Figures 7 and 8 below, Mooring discloses a wristwatch. More specifically, it describes "a modular movement that is both fully functional standalone as well as interchangeable in other portable devices, ***such as watches***." Ex-1005 ¶22.

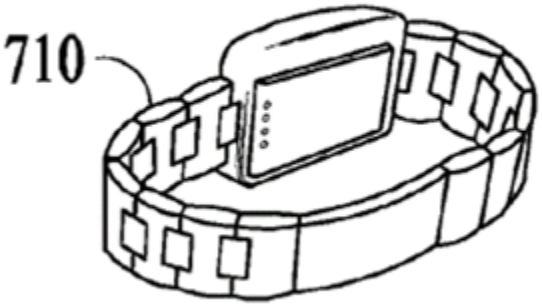

134. Thus, it is my opinion that Mooring discloses a wristwatch as described in the preamble.

b. Element 1[a]: a watchcase;

135. In my opinion, Mooring teaches Element 1[a].

136. Mooring Figures 1A-C show "case 14," which corresponds to the claimed "watchcase."

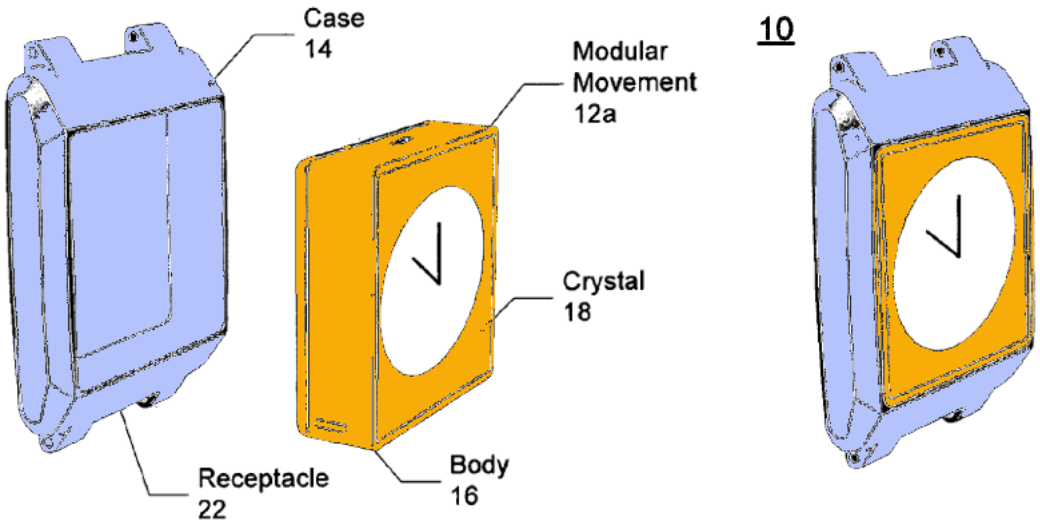

FIG. 1A

Ex-1005, Fig. 1A (annotated).

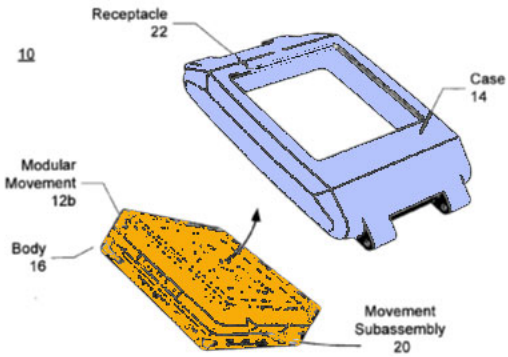

FIG. 1B

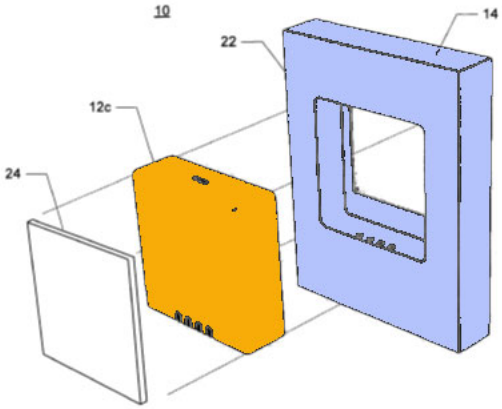

FIG. 1C

Ex-1005, Figs. 1B-C (annotated).

137. Thus, it is my opinion that Mooring teaches a watchcase.

c. Element 1[b]: an electronic display in said watchcase,

138. In my opinion, Mooring teaches Element 1[b].

139. Mooring teaches that the electronic movements 12b and 12c in Figures 1B and 1C include an electronic display, stating that an electronic movement "may include a computer-based movement with ***a touchscreen or LCD display***." Ex-1005 ¶39. A touch screen or LCD display is an electronic display. Ex-1001, 5:21-25 ("color liquid crystal matrix display LCD").

140. As shown in annotated Figures 1B and 1C below, the electronic movements 12b and 12c (shaded orange) with digital displays are in the watch case (shaded blue), as required by the '033 patent.

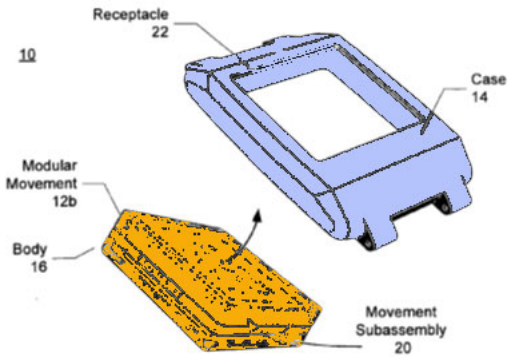

FIG. 1B

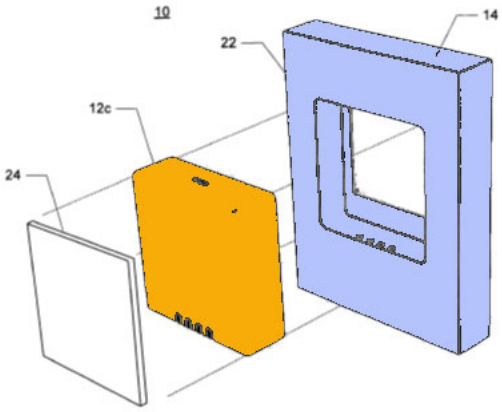

FIG. 1C

Ex-1005, Figs. 1B-C (annotated).

141. Thus, it is my opinion that Mooring teaches an electronic display in said watchcase.

d. Element 1[c]: a quartz oscillator,

142. In my opinion, Mooring teaches Element 1[c].

143. Mooring expressly states that the electronic movements 12b and 12c in Figures 1B and 1C "may include a quartz movement." Ex-1005 ¶39; *see also id.* Claim 10 ("the electronic movement comprising a quartz movement"). And Mooring explains that "a quartz movement used in quartz watches . . . utilizes frequency of vibrations of a quartz crystal to accurately regulate the operation of the watch." *Id.* ¶3.

144. "Quartz clocks and quartz watches are timepieces that use an electronic oscillator regulated by a quartz crystal to keep time." Ex-1036, p. 1. A POSITA would have understood that the quartz oscillator of clock 620, colored blue below in Figure 6, is the component that oscillates. This quartz oscillator is regulated by the quartz crystal to keep time. *Id.*

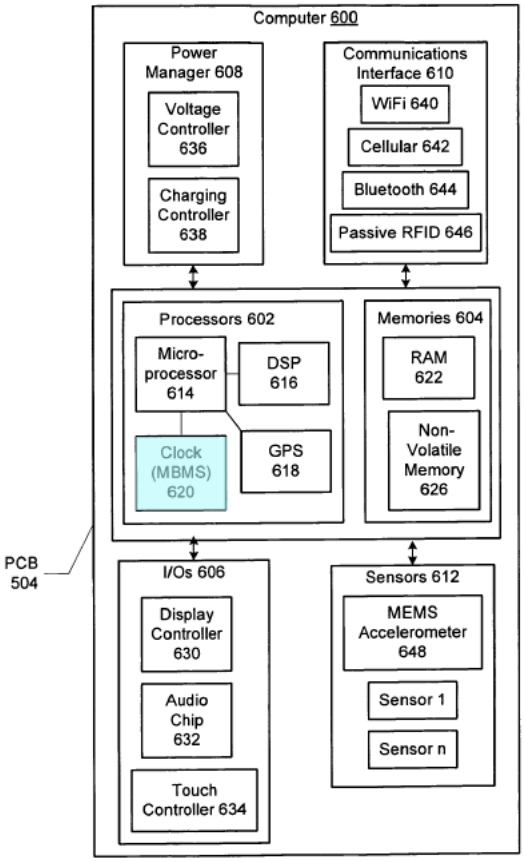

FIG. 6

Ex-1005, Fig. 6 (annotated).

145. Thus, it is my opinion that Mooring teaches a quartz oscillator.

e. Element 1[d]: a microcontroller being arranged for reproducing on said electronic display the simulation of a mechanical watch movement comprising a gear train, said simulation being visible so as to indicate the time, said microcontroller being further arranged for synchronizing the displayed time by said displayed mechanical movement with that of said quartz oscillator.

146. In my opinion, Mooring-Satoshi teaches Element 1[d].

147. As discussed above in Element 1[b] (§VIII.A.2.c), Mooring discloses a touchscreen. As highlighted below in Figure 6, the claimed "microcontroller" corresponds to display controller 630 together with microprocessor 614 and/or digital signal processor (DSP) 616.

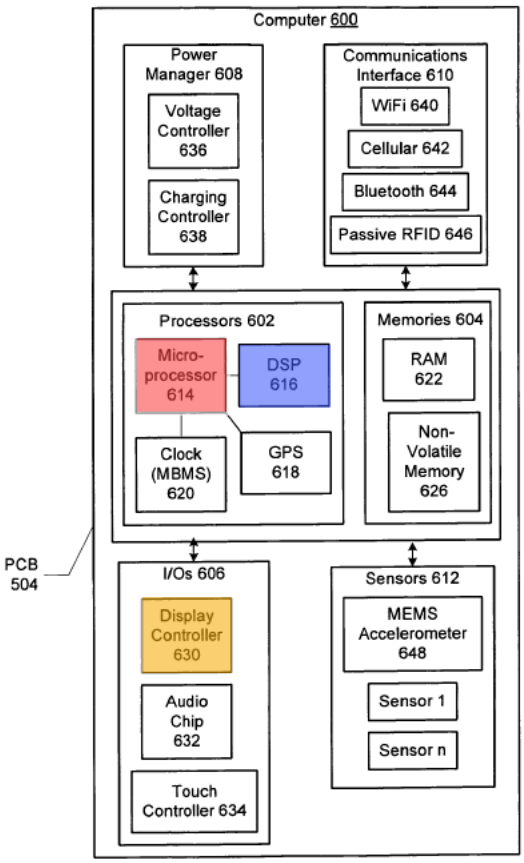

FIG. 6

Ex-1005, Fig. 6 (annotated).

148. Mooring states, "Microprocessor 614 and/or DSP may be capable of concurrently executing multiple software routines, including system code, to control the various processes of the modular movement 12b." Ex-1005 ¶57. This processor "execut[es] software that displays a user interface on the touchscreen and operates

the modular movement." *Id.* ¶12. The software would have microprocessor and/or DSP instructions that would calculate the time and date and simulate mechanical watch movement and store the data in RAM 622. *Id.* ¶60. ("Display controller 630 may access RAM 622 and transfer processed data, such as time and date and/or a user interface, to the touchscreen 506 for display.") That processor executing software may include microprocessor 614 and/or DSP 616. Ex-1005 ¶57.

149. Thus, display controller 630 and microprocessor 614 and/or DSP 616 correspond to the claimed microcontroller in Element 1[d].

150. Mooring additionally discloses that the electronic movement may include "an analog or digital display." Ex-1005 ¶39. A POSITA would have understood that an "analog display" uses hour and minute hands to indicate the time. Ex-1036 ("An analog watch (American) or analogue watch (UK and Commonwealth) is a watch whose display is not digital but rather analog with a traditional clock face."; "An analog watch has hands to show the time."). In contrast, a "digital display" uses digital numbers, such 12:08, to indicate the time. Ex-1016 ("A digital display shows the time as a number, e.g., 12:08 instead of a shorthand pointing towards the number 12 and a long hand 8/60 of the way around the dial."). Because Mooring describes an analog display, its microcontroller displays on the touchscreen a simulation of the movement of hour and minute hands to indicate the

time. Displaying the movement of an hour hand and minute hand, as shown below in Figure 1A, is the claimed "simulation of a mechanical watch movement."

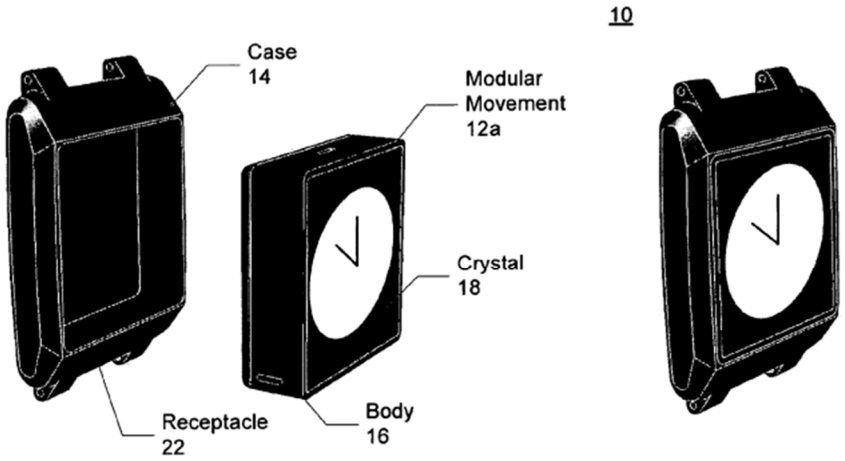

FIG. 1A

Ex-1005, Fig. 1A.

151. Satoshi, like Mooring, teaches an electronic display (an LCD) that is capable of simulating a mechanical watch movement. Ex-1007 ¶¶11, 40. For example, Satoshi describes displaying a "skeleton clock" by showing the "the rotation of an hour hand, minute hand, and second hand in hour, minute, and second units respectively." *Id.* ¶4.

152. Satoshi also discloses a microcontroller (calculation processing part 3 highlighted in green below) that controls the display of the mechanical watch movement. With reference to Figure 1, Satoshi states that "calculation processing part 3 executes the rotating body image display program of the present invention and

functions as display controlling means and color changing means of the present invention." *Id.* ¶40.

[FIG. 1]

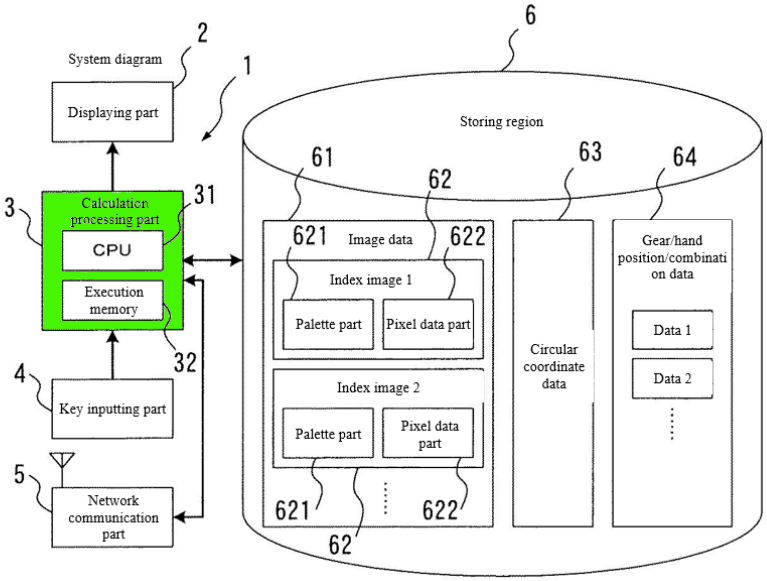

Ex-1007, Fig. 1 (annotated).

153. Satoshi further teaches a "simulation of a mechanical watch movement comprising a gear train, said simulation being visible so as to indicate the time." For example, Satoshi's claim 1 reads: "A rotating body image display device for displaying animation of a plurality of rotating bodies such as gears that can synchronously rotate with each other[.]" Ex-1007. This claimed display of rotating gears is illustrated by Satoshi's Figure 5L:

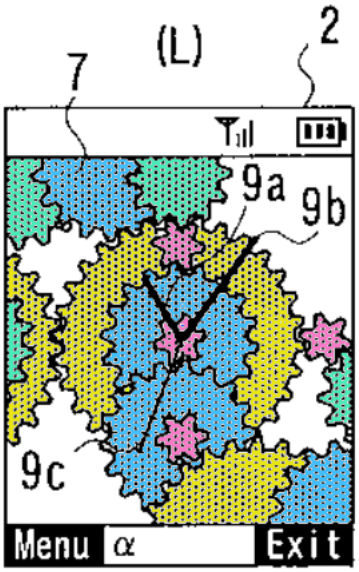

Ex-1007, Fig. 5L (annotated).

154. Satoshi also discloses coupling the "gear train" with watch hands that rotate in synchronization with the interlocking gears. Satoshi's specification states that the applicants developed "a program for displaying an animation of interactively operable gears of any number for mobile phone users to arrange and display in a plurality of combinations." Ex-1007 ¶4. Satoshi states the claimed program "can also display ***watch hands that rotate corresponding to the rotation of each gear***." *Id.* For example, in describing Figure 5L above, Satoshi states: "hands 9 (illustrated in FIG. 5) can be displayed integrally rotating with arbitrary gears in addition to the gears 7, and by adjusting a rotation rate of a gear serving as a driving gear, a gear ratio of gears meshing together, and the like, ***movement of an hour hand 9a, a minute hand 9b, and a second hand 9c of a clock such as depicted in FIG. 5(L) can be replicated***." *Id.* ¶42.

155. It would have been obvious to a POSITA to implement the watch face and gears of Satoshi in the electronic display of the wristwatch of Mooring. Mooring already discloses an analog clock display on its LCD. And the '033 Patent admits that it was known that users enjoy seeing the mechanical movement and other inner working of a mechanical watch. Ex-1001, 1:35-46. Indeed, skeleton clocks have existed since at least the 1800's. Ex-1022. And skeleton watches have amazed people since the mid-18th century. Ex-1035 ("The spectacle of seeing into the works of a watch has enticed enthusiasts since André Charles Caron, clockmaker to France's Louis XV, came up with the skeleton, or open-worked, concept in the mid-18th century."). A POSITA would have been well-aware that consumers are attracted to watches that reveal their gears and other inner workings. Also teaching this motivation, Satoshi states that the operable gears that it describes with clock hands "enhance user interest." Ex-1007 ¶4. Thus, design incentives and market forces would have motivated a POSITA to apply the teachings of Satoshi to Mooring.

156. It would have been obvious to incorporate a skeleton clock display as described by Satoshi to create a more interesting display, as illustrated in this modified version of Figure 8 of Mooring.

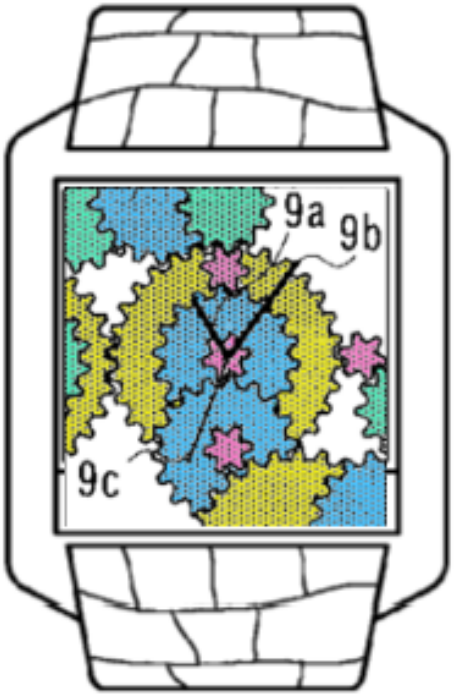

157. The combination of Mooring and Satoshi also teaches "synchronizing the displayed time by said displayed mechanical movement with that of said quartz oscillator," as recited in Element 1[d].

158. Satoshi teaches that the rotation rate of the driving gear and the gear ratios determine the movement of the watch hands—and thus the time displayed by the watch hands. Ex-1007 ¶¶4, 42. In other words, a POSITA would have understood that the time displayed by Satoshi's gear train is based on a mechanical simulation based on gear ratios and other simulated components and might not display a time that matches time kept by the oscillator in Satoshi's mobile phone (or Mooring's watch). Because a user may want to periodically set the mechanical

watch to the more accurate (quartz oscillator) time, Satoshi discloses that the user can initiate a process to set the displayed watch hands to "the current time . . . read from the clock function of the mobile phone." *Id*. ¶87.

159. In applying Satoshi to the wristwatch of Mooring, a POSITA would have understood the relevant "clock function of the mobile phone" would correspond to clock 620 in Mooring, which determines the time based on a quartz oscillator. Ex-1005 ¶¶3, 58. Accordingly, it would have been obvious to a POSITA that the user request taught in Satoshi would synchronize the time displayed by the watch hands (based on the rotation of the gears) with the clock time based on the quartz oscillator in Mooring. A POSITA would have understood that a timekeeping mechanism based on a quartz oscillator would be more accurate than one based on a mechanical simulation involving gears, springs, and similar components. And although a user may appreciate the look and authenticity of a traditional mechanical watch movement, it would also be practical to at least periodically synchronize the mechanical simulation with the more accurate quartz oscillator time to ensure that the displayed time is more accurate. Thus, Mooring-Satoshi teaches "synchronizing the displayed time by said displayed mechanical movement with that of said quartz oscillator."

160. Moreover, a POSITA would have understood that a quartz oscillator is more precise in tracking time than the mechanical gear mechanism display in Satoshi. As Wikipedia explains in its entry on "Quartz clock":

> Quartz clocks and quartz watches are timepieces that use an electronic oscillator regulated by a quartz crystal to keep time. This crystal oscillator creates a signal with very precise frequency, so that ***quartz clocks and watches are at least an order of magnitude more accurate than mechanical clocks***. Generally, some form of digital logic counts the cycles of this signal and provides a numerical time display, usually in units of hours, minutes, and seconds.

Ex-1037, at p. 1.

161. A POSITA would have been motivated to implement the synchronization described in Satoshi with the time determined by the quartz oscillator in Mooring. A POSITA would have understood that time determined by the quartz oscillator Mooring is a more accurate representation of time that the time determined by the gear mechanism.

162. Thus, it is my opinion that Mooring-Satoshi teaches a microcontroller arranged for displaying the simulation of a mechanical watch movement comprising a gear train, said simulation being visible so as to indicate the time, said microcontroller being further arranged for synchronizing the displayed time by said displayed mechanical movement with that of said quartz oscillator.

3. Dependent Claim 11: The wristwatch of claim 1, arranged for performing said synchronization periodically in an automatic manner.

163. In my opinion, Mooring-Satoshi teaches Claim 11.

164. First, Mooring-Satoshi teaches "synchronizing the displayed time by said displayed mechanical movement with that of said quartz oscillator." *See supra* §VIII.A.2.e.

165. In a watch such as the one described by the Mooring-Satoshi combination, a POSITA would have realized that a clock time determined by a quartz oscillator (as taught in Mooring) would be more precise than the time determined by the gear rotation in Satoshi. Ex-1037 ("This crystal oscillator creates a signal with very precise frequency, so that quartz clocks and watches are at least an order of magnitude more accurate than mechanical clocks."). Accordingly, a POSITA would have been motivated to keep the time displayed by the watch hands (controlled by the simulated gear train) closer to the time determined by clock 620 in Mooring (e.g., the correct time).

166. Satoshi teaches that a user can manually request to set the watch hands to "the current time . . . read from the clock function of the mobile phone." Ex-1007 ¶87. A POSITA would have understood that it would also be possible to program a watch to perform this synchronization between the simulation and clock 620 periodically in an automatic manner (for example, once per hour or once per day).

And a POSITA would have been motivated to do so because this periodic synchronization would provide a user with a realistic and authentic simulation of a mechanical watch movement. By periodically synchronizing the displayed time with the more accurate time of the quartz oscillator (in clock 620), a POSITA would mitigate the inaccuracy associated with mechanical watch movements. By contrast, a true mechanical watch movement would require a user to periodically readjust the time to maintain accuracy, so performing this synchronization automatically would be an advantage for such a watch. Ex-1049.

167. Thus, it is my opinion that Mooring-Satoshi teaches periodic synchronization.

4. Dependent Claim 12: The wristwatch of claim 11, comprising means for entering and executing a request for said synchronization by the user.

168. In my opinion, Mooring-Satoshi teaches Claim 12.

169. As discussed above, this term should be construed under 35 U.S.C. §112(6). The recited function is "entering and executing a request for said synchronization by the user," and the corresponding structure is "one of the push-buttons 41" or "the touch sensor," described in the '033 Patent at column 8, lines 44-49, or their equivalents.

170. Satoshi describes a "mobile phone 1 including a displaying part 2" and "a key inputting part 4 provided with various keys used when a user operates the

mobile phone 1 and inputs data . . ." Ex-1007 ¶39. And Satoshi explains that "based on an ***operation by the user***, the ***current time can be read from the clock function of the mobile phone 1***, and corresponding to the hour, minute, and second that was read, a process is performed in which ***the hour hand 9a, the minute hand 9b, and the second hand 9c are respectively set to an angle for the current hour, an angle for the current minute, and an angle for the current second*** (steps S23, 24, and 25)" and "***by operating the set key, the angles of the hands 9 are fixed*** and the process ends (step S26)." *Id.* ¶87.

171. Accordingly, Satoshi teaches that the user can initiate a process by which the displayed hour, minute, and second hand can be synchronized with the mobile phone (crystal oscillator) time and that this process is completed by pressing the "set key." A POSITA would have been motivated to allow a user to request synchronization so that a user could update the displayed time to the more accurate time of the quartz oscillator. For example, if a user were trying to make a plane or train connection or an important business meeting or other appointment, the user would want the ability to manually synchronize the time to have the most accurate time possible at that particular moment. This would provide the user with the desirable traditional and authentic look and feel of a mechanical watch mechanism while also providing the advantages of the precise timekeeping offered by a quartz oscillator.

172. Additionally, a POSITA would have understood that the "set key," (which is one of the "various keys used when a user operates the mobile phone") would be the same as or equivalent to the '033 Patent's "push buttons 41." Or, alternatively, it would have been obvious to a POSITA that the set key could be implemented as a virtual key on Mooring's touchscreen. Or the synchronization request could be performed using a combination of a touchscreen interface as disclosed in Mooring and a set key as disclosed in Satoshi. Thus, the combined Mooring-Satoshi system includes the structure (touchscreen, push button, or both) for performing the claimed synchronization function.

173. Thus, it is my opinion that Mooring-Satoshi teaches "means for entering and executing a request for said synchronization by the user," as recited in Claim 12.

5. Dependent Claim 13: The wristwatch of claim 1, arranged for displaying said mechanical movement on the whole surface of the electronic display so as to occupy the position and the dimensions of a real mechanical movement.

174. In my opinion, Mooring-Satoshi teaches Claim 5.

175. As shown below in Figure 5L, Mooring-Satoshi teaches "displaying said mechanical movement on the whole surface of the electronic display."

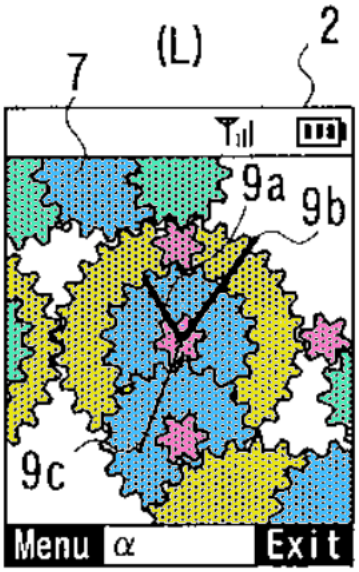

Ex-1007, Fig. 5L (annotated).

176. It would have been obvious to a POSITA to exclude the bar on top (showing the battery and cell bars) and the bar on bottom (showing "Menu" and "Exit") to make the clock hands and gear train larger and easier for users to see and to have fewer distractions. This would not have impacted functionality because a simple interaction such as a tap on the screen could have displayed the top and bottom bars to support further interaction. Additionally, because Satoshi explicitly states that users are interested in looking at working gears on a display, a POSITA would be motivated to make the gears and the corresponding movements easier for the user to observe. Ex-1007 ¶ 4. As shown in the below figure, these modifications would display a simulation more in line with the dimensions and actual functions of mechanical watch and allow the user to track these functions—the ultimate purpose of a skeleton clock or watch. In fact, the '033 Patent admits that it was already

known that users enjoy seeing the mechanical movement and other inner working of a mechanical watch. Ex 1001, 1:35-46. And Satoshi also teaches the same motivation to display the inner workings of a watch "to enhance user interest," which would be enhanced by displaying the gears and other components at their actual dimensions, which would occupy the whole surface of the electronic display. Ex 1007 ¶4.

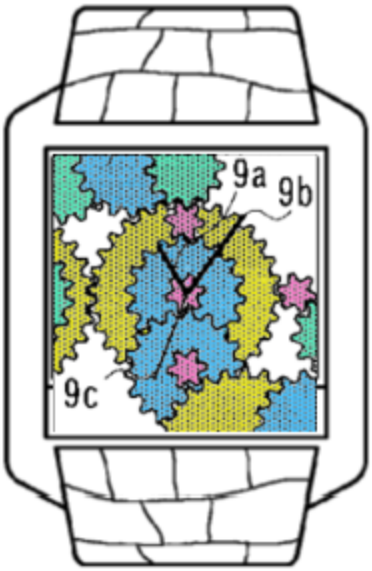

177. It additionally would have been obvious to modify the number and size of gears so that the gears do not extend beyond the display so that a user can observe all the gear movements. For example, Figures 5-F, 5-G, and 5-M disclose embodiments where the entire gear mechanism is shown within the bounds of the display screen.

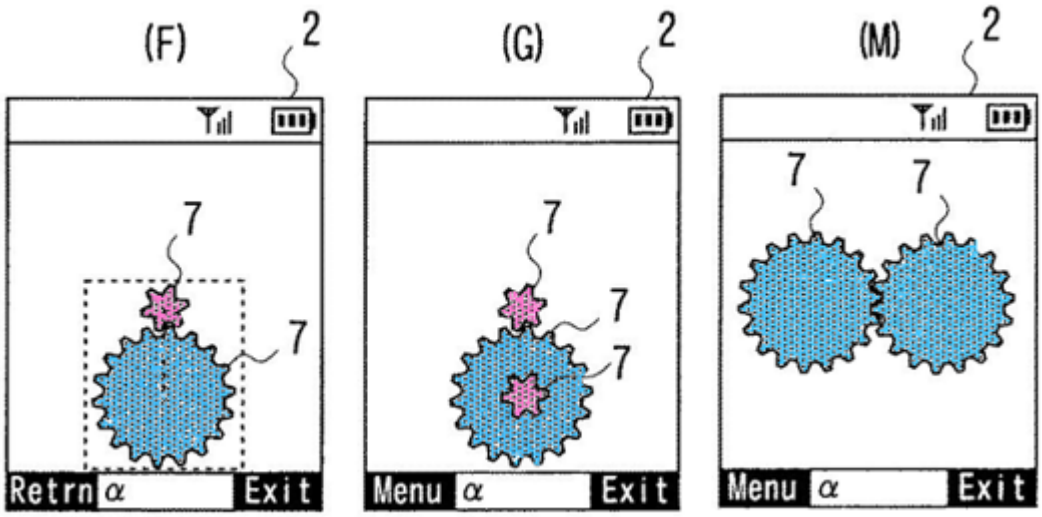

Ex-1007, Figs. 5F, 5G, and 5M (annotated).

178. Satoshi also teaches that its gears can "occupy the position and the dimensions of a real mechanical movement," as required by Claim 13. In Satoshi, the rotation of the gears can "replicate" the movement of clock hands, which results in a "design of a ***skeleton clock*** in which the gears 7 are exposed is enabled." Ex-1007 ¶42. A POSITA would have understood that a skeleton clock is a "real mechanical movement," as recited in Claim 13.

179. A POSITA would have understood that a skeleton clock, when applied to a wristwatch, fills the large area of wristwatch movement, as shown below.

Ex-1016.

Ex-1034.

180. Thus, in applying Satoshi's teaching to form a "skeleton clock" to the wristwatch LCD of Mooring, a POSITA would have been motivated to display the "mechanical movement on the whole surface of the electronic display so as to occupy the position and the dimensions of a real mechanical movement," as recited in Claim 13.

181. Thus, it is my opinion Mooring-Satoshi teaches displaying said mechanical movement on the whole surface of the electronic display so as to occupy the position and the dimensions of a real mechanical movement.

6. Dependent Claim 14: The wristwatch of claim 1, said microcontroller being arranged for enabling different mechanical movements selectable by the user for display.

182. In my opinion, Mooring-Satoshi teaches Claim 14.

183. Satoshi teaches that a user can select different combinations of gears to simulate the mechanical movement of a clock. Discussing Figure 5L, Satoshi states: "In addition, to enhance user interest, the content described above can also display watch hands that rotate corresponding to the rotation of each gear which, ***by a user successfully arranging gears in combination***, enables the rotation of an hour hand, minute hand, and second hand in hour, minute, and second units respectively, as well a display such as of a so-called skeleton clock." Ex-1007 ¶04.

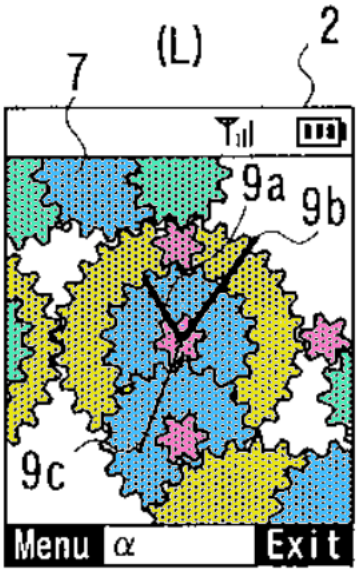

Ex-1007, Fig. 5L (annotated).

184. A POSITA would have understood that the user can arrange different combinations of gears in Satoshi. A POSITA would have understood that these different combinations of gears are "different mechanical movements." Because the user can arrange the gear combinations in whatever manner they wish, those different mechanical movements are "selectable by the user for display."

185. Thus, it is my opinion that Mooring-Satoshi teaches enabling different mechanical movements selectable by the user for display.

B. Ground 2: Claims 2-3, 17, and 19 are obvious over Mooring and Satoshi in further view of Lee.

1. A POSITA would have been motivated to combine Mooring and Satoshi's teachings with Lee's teachings and would have had a reasonable expectation of success.

186. A POSITA would have been motivated to combine the teachings of Mooring and Satoshi with the teachings of Lee and would have had a reasonable expectation of success in doing so because each relates to clocks displayed on digital interfaces. Ex-1005 ¶¶22, 39; Ex-1007 ¶4; Ex-1008 ¶2. All three references also describe electronic movements with LCD and/or touch-sensitive display screens. Ex-1005 ¶4; Ex-1007 ¶¶2-4; Ex-1008 ¶5.

187. Lee additionally teaches using the touchscreen to adjust the position of watch hands. Ex-1008 ¶47. Because Mooring's wristwatch includes a touchscreen, it would have been obvious to a POSITA to apply Lee's method of adjusting time using a touchscreen. A straightforward way to adjust the time on the Mooring-Satoshi watch would be to use Mooring's touchscreen interface. Such adjustments are an important function when a user changes time zones or after the period of a period of low or no use of the watch. Thus, a POSITA would have been motivated to apply the teachings of Lee to adjust the time using the touchscreen of Mooring. A POSITA would have also understood that incorporating additional touch-interactive components (as described by Lee) into the touchscreen wristwatch taught by Mooring-Satoshi would appeal to watch users. Thus, design incentives and

market forces would have motivated a POSITA to apply the teachings of Lee to Mooring-Satoshi.

188. A POSITA would have had a reasonable expectation of success in combining Lee and Mooring-Satoshi because they would have recognized that different gestures and user input can be interchangeably implemented on touchscreens and all three disclose using conventional processors and displays. And a POSITA would have understood that these references disclose interrelated teachings based on routine technologies that would have been amenable to various well-understood and predictable combinations.

2. Dependent Claim 2

a. Element 2[pre]: The wristwatch of claim 1, wherein:

189. The Mooring-Satoshi combination teaches Claim 1.

b. Element 2[a]: said electronic display is associated with a touch sensor;

190. It is my opinion that Mooring teaches Element 2[a].

191. As described above, Mooring discloses an electronic display. *See supra* §VIII.A.2.c. Mooring further discloses the electronic display is a "touchscreen." Ex-1005 ¶12. A touchscreen is an "electronic display . . . associated with a touch sensor," as recited in Element 2[a].

c. Element 2[b]: and the position of at least one component of said movement can be modified by pressing on the position of said electronic display corresponding to said component.

192. It is my opinion that Mooring-Satoshi-Lee teaches Element 2[b].

193. As shown below in Figures 6 and 7, Lee teaches that "the position of at least one component of said movement can be modified by pressing on the position of said electronic display corresponding to said component."

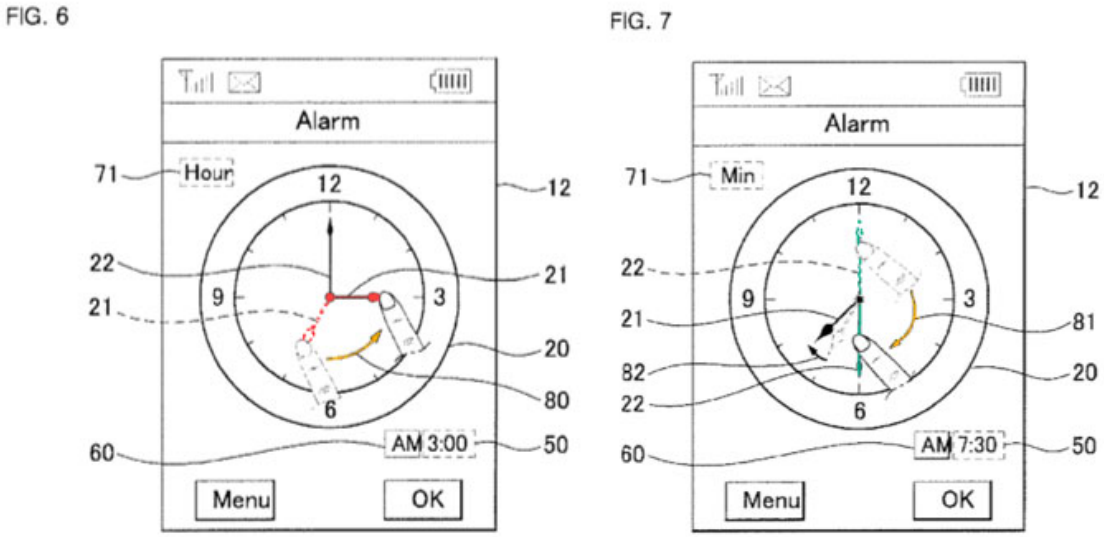

Ex-1008, Figs. 6-7 (annotated).

194. Lee expressly states Figures 6 and 7 "depict examples for adjusting displayed position of a selected clock hand relative to locations on the touchscreen display that user contact occurs." Ex-1008 ¶47. Figure 6 shows a scenario where "the user contacts the touchscreen relative to hour hand 21 (dashed lines) and then slides a finger or stylus, for example, in direction 80 until the hour hand is located

at a desired location." *Id.* ¶47. Figure 7 shows a similar scenario where "the user selects and drags the minute hand 22" to move that component "from a first location to a second location." *Id.* ¶¶48-49. In Figure 7, the "movement of the minute hand causes hour hand 21 to correspondingly move in direction 82." *Id.*

195. It would have been obvious to a POSITA to apply the method of adjusting time in Lee to the Mooring-Satoshi combination described above for Claim 1 for the reasons described above (§VIII.B.1).

196. Thus, it is my opinion that Mooring-Satoshi-Lee teaches the position of at least one component of said movement can be modified by pressing on the position of said electronic display corresponding to said component.

3. Dependent Claim 3

a. Element 3[pre]: The wristwatch of claim 2, wherein:

197. In my opinion, the Mooring-Satoshi-Lee combination teaches Claim 2. *See supra* §VIII.B.2.

b. Element 3[a]: wherein said microcontroller is arranged for displaying the simulation of a movement and

198. In my opinion, the Mooring-Satoshi-Lee combination teaches Claim 3[a].

199. Element 1[d] includes the limitation of Element 3[a], and thus, Mooring-Satoshi teaches Element 3[a] for the same reasons described above for Element 1[d] (§VIII.A.2.e). *See* Ex-1020, element 3[a].

c. Element 3[b]: wherein the angular position of at least one element of said gear-train can be modified by pressing on said touch sensor.

200. In my opinion, the Mooring-Satoshi-Lee combination teaches Claim 3[b].

201. Lee discloses that "the position of at least one component of said movement can be modified by pressing on the position of said electronic display corresponding to said component" in Figures 6 and 7 (shown below). *See supra* §VIII.B.2.c. And as discussed above, it would have been obvious to a POSITA to apply the method of adjusting time in Lee to the Mooring-Satoshi combination. *See supra* §VIII.B.1.

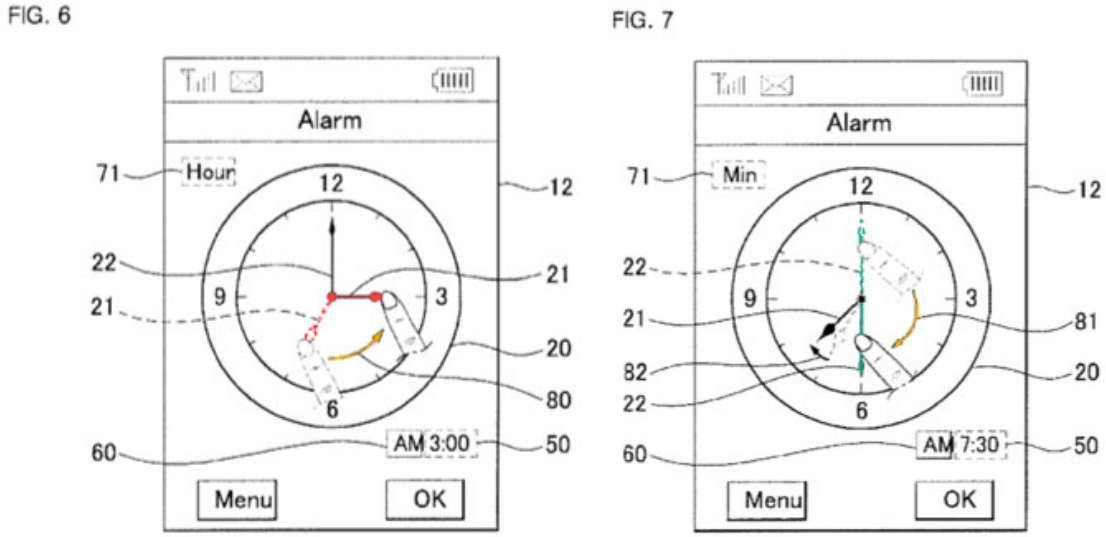

Ex-1008, Figs. 6-7 (annotated).

202. Satoshi teaches that "watch hands . . . rotate corresponding to the rotation of each gear." Ex-1007 ¶4. To make Satoshi's gear simulation as realistic as possible, it would then follow that adjusting the watch hands, as taught in Lee, would automatically rotate the gears as taught in Satoshi. Accordingly, it would have been obvious to a POSITA that applying Lee's teachings to Satoshi to change the time would also modify the "angular position of at least one element of said gear-train," as recited in Element 3[b].

203. Thus, it is my opinion that Mooring-Satoshi-Lee teaches the angular position of at least one element of said gear-train can be modified by pressing on said touch sensor.

4. Independent Claim 17:

a. Element 17[pre]: Method for displaying time in a wristwatch, comprising displaying on an electronic display of a simulated mechanical watch movement comprising a gear train and of time indicators so as to simulate a mechanical watch,

204. To the extent the preamble is limiting, the Mooring-Satoshi combination teaches a "wristwatch" as described above for Element 1[pre] (§VIII.A.2.a), an "electronic display" as described for Element 1[b] (§VIII.A.2.c), and "a simulated mechanical watch movement comprising a gear train and of time indicators so as to simulate a mechanical watch" as described above for Element 1[d] (§VIII.A.2.e). *See* Ex-1020, element 17[pre].

b. Element 17[a]: said method comprising a step of modifying a position of at least one component of said mechanical movement by detecting displacement of a finger on that component with a touch sensor connected to said display.

205. Mooring-Satoshi-Lee teaches Element 17[a] for the same reasons described above for Element 2[b] (§VIII.B.2.c). *See* Ex-1020, element 17[a].

5. Dependent Claim 19: The method of claim 17, comprising a step of loading new displayable mechanical movements through an input-output interface of the watch.

206. In my opinion, Mooring-Satoshi-Lee teaches Claim 19.

207. Mooring, Satoshi, and Lee each individually disclose an "input-output interface." Ex-1005 ¶64 (communication interface 610); Ex-1007 ¶64 (communications part 5); Ex-1008 ¶31 (mobile communication module 10).

208. Satoshi further describes using the input-output interface to load "a file created by the rotating body image display program." Ex-1007 ¶31. A POSITA would have understood that the "file created by the rotating body image display program" is a file that represents a particular combination of gears to rotate the clock hands. Satoshi states, "In addition, if a file created as a sample or the like is stored to a dedicated internet storage in advance, ***downloading this allows, for example, for a display of gears 7 / hands 9 to be performed*** without an operation of generating the gears 7 or the like being performed." Ex-1007 ¶94. It would have been obvious to a POSITA to include this download capability using Mooring's Communications Interface 610 (shown in blue in Figure 6 below) because that is the ultimately the purpose of such capabilities. For the reasons described above for Element 1[d] (§VIII.A.2.e), the gears and watch hands displayed from the downloaded file is a "new displayable mechanical movement."

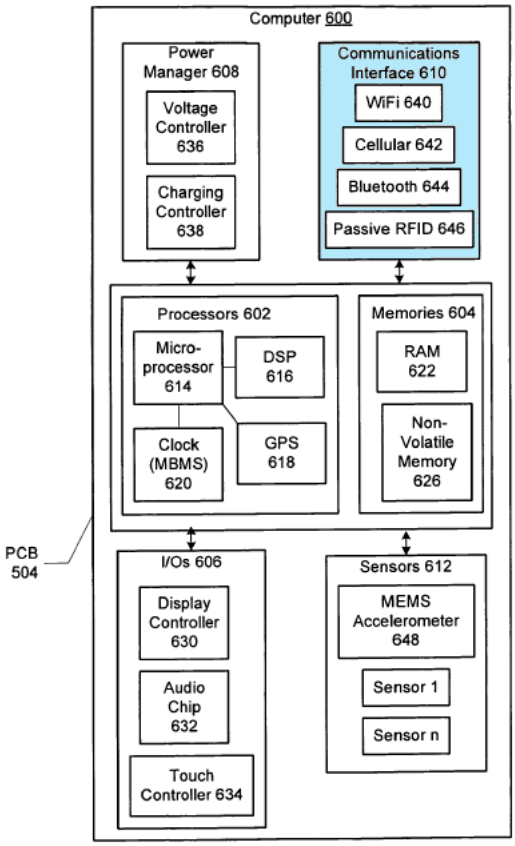

FIG. 6

Ex-1005, Fig. 6 (annotated).

209. Thus, it is my opinion that Mooring-Satoshi-Lee teaches loading new displayable mechanical movements through an input-output interface of the watch.

C. Ground 3: Claims 13-16 are obvious over Mooring and Satoshi in further view of Louch.

1. A POSITA would have been motivated to combine Mooring and Satoshi's teachings with Louch's teachings and would have had a reasonable expectation of success.

210. A POSITA would have been motivated to combine the teachings of Mooring-Satoshi with the teachings of Louch and would have had a reasonable expectation of success in doing so because all three references include teachings

directed to clocks displayed on digital interfaces. Ex-1005 ¶¶22, 39; Ex-1007 ¶4; Ex-1009 ¶67. All three references also describe electronic movements with conventional processors and LCD and/or touch-sensitive display screens. Ex-1005 ¶4; Ex-1007 ¶¶2-4; Ex-1009 ¶¶11-14, 114. Louch further describes various user interactions with widgets and dashboards on touch-sensitive displays, and, in particular, on a wristwatch display. Ex-1009 ¶¶79-87.

211. As described above for Element 1[d] (§VIII.A.2.e), it would have been obvious to a POSITA to implement the clockface animation described in Satoshi in the touchscreen of the wristwatch described in Mooring, as illustrated in this modified version of Figure 8 of Mooring.

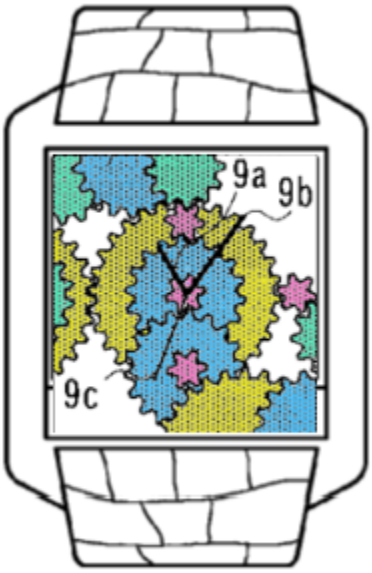

212. As shown below in Figure 1F, Louch similarly discloses "a digital watch" with a touch sensitive display area that can display applications or activities

called widgets. Ex-1009 ¶49. Louch gives a "world clock" as an example of a widget that fills the entire display. *Id.* ¶67

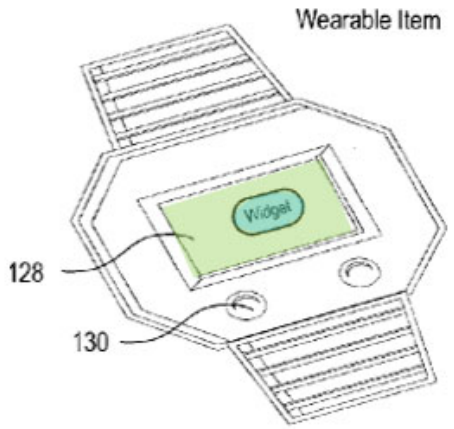

FIG. 1F

Ex-1009, Fig. 1F (annotated)

213. Louch also discloses ways for a user to interact with a touchscreen by scrolling through widgets, as shown below in Figure 5B below. Ex-1009 ¶80.

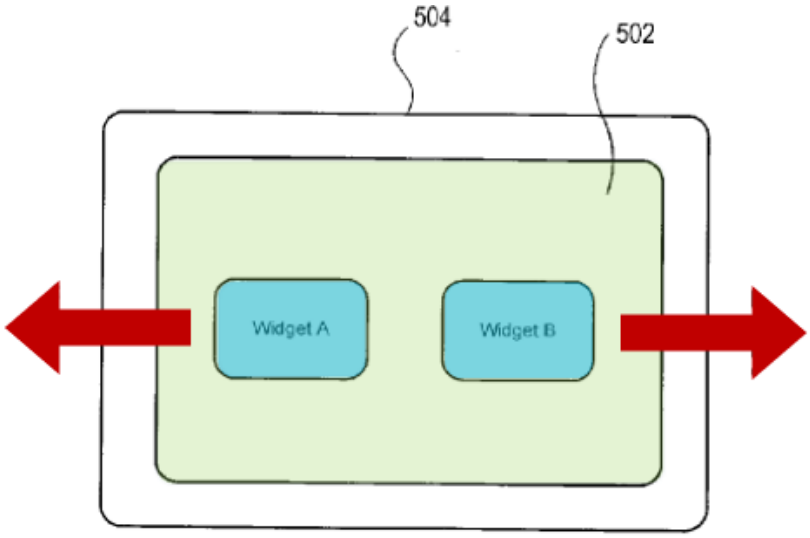

FIG. 5B

Ex-1009, Fig. 5B (annotated).

214. It would have been obvious to apply the teachings of Louch (such as scrolling from widget to another) to the wristwatch taught by the combination of Mooring and Satoshi. Because the wristwatch in Mooring has a touchscreen, it would have been obvious to apply the scrolling teachings of Louch.

215. Mooring discloses a touchscreen interface for a watch. Ex-1005 ¶12. A POSITA would have been motivated to apply the scrolling of Louch to the touchscreen of Mooring to switch between different screen, applications, or activities. A POSITA would also have recognized that incorporating Louch's user-friendly touch navigation into the watch and clock display taught by Mooring-Satoshi would appeal to watch users. Thus, design incentives and market forces would have motivated a POSITA to apply the teachings of Louch to Satoshi and Mooring.

216. A POSITA would have had a reasonable expectation of success in combining Louch with Mooring and Satoshi. A POSITA would have understood that these references disclose interrelated teachings based on routine microcontroller-based, touch screen technologies that would have been amenable to various well-understood and predictable combinations.

2. Dependent Claim 13: The wristwatch of claim 1, arranged for displaying said mechanical movement on the whole surface of the electronic display so as to occupy the position and the dimensions of a real mechanical movement.

217. In my opinion, Mooring-Satoshi teaches Claim 13. *See supra* §VIII.A.5.

218. Alternatively, Mooring-Satoshi in further combination with Louch also teaches Claim 13.

219. Louch discloses "a digital watch" with a touch sensitive display area 128 that can display a dashboard/widget, as shown below in Figure 1F. Ex-1009 ¶49.

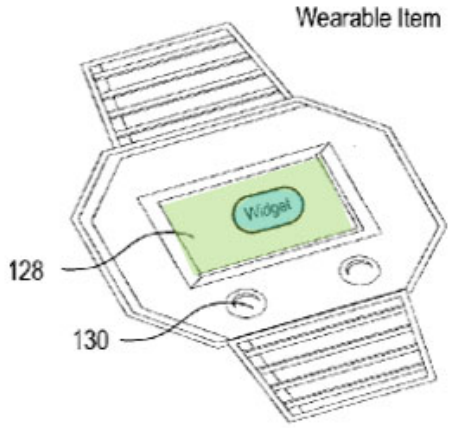

FIG. 1F

Ex-1009, Fig. 1F (annotated).

220. Louch also provides an example of a widget that can display the time, called "world clock widget 402." Ex-1009 ¶67. Louch teaches that the world clock widget 402 "can consume the entire display area 406." Ex-1009 ¶67.

221. A POSITA would have found it obvious to apply Louch's disclosure of a clock that fill an entire display screen to the display of Satoshi's mechanical watch movement (with a gear train) on the touchscreen of Mooring's wristwatch. And Mooring-Satoshi in combination also teaches the display to "occupy the position and the dimensions of a real mechanical movement" for the same reasons described above for Claim 13 (§VIII.A.5).

222. Thus, it is my opinion that Mooring-Satoshi-Louch teaches displaying said mechanical movement on the whole surface of the electronic display so as to occupy the position and the dimensions of a real mechanical movement.

3. Dependent Claim 14: The wristwatch of claim 1, said microcontroller being arranged for enabling different mechanical movements selectable by the user for display.

223. As described above, Mooring-Satoshi teaches Claim 14. *See supra* §VIII.A.6.

224. Alternatively, in my opinion, Mooring-Satoshi in further combination with Louch also teaches Claim 14. Louch discloses "a digital watch" with a touch sensitive display area 128 that can display a dashboard/widget, as shown below in Figure 1F. Ex-1009 ¶49.

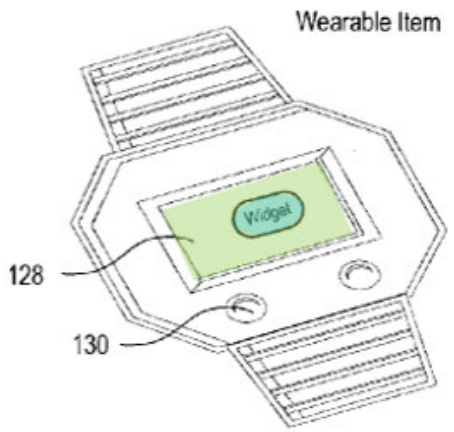

FIG. 1F

Ex-1009, Fig. 1F (annotated).

225. Louch further describes that a user can use the touchscreen to scroll to different widgets: "In some implementations, the user ***can scroll (horizontally or vertically) through dashboards or widgets*** across the display area 502 by touching the widgets and making the appropriate finger gestures in horizontal or vertical directions." This is shown in Figure 5B below. Ex-1009 ¶80.

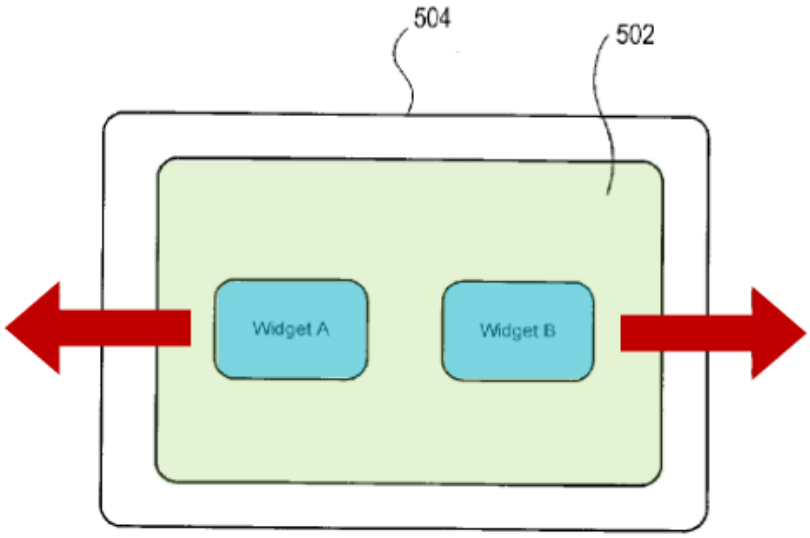

FIG. 5B

Ex-1009, Fig. 5B (annotated).

226. It would have been obvious to apply the user interface in Louch to the wristwatch taught by the combination of Mooring and Satoshi. As explained above (§VIII.B.6), Satoshi teaches that a user can select various combinations of gears to simulate the mechanical movement of a clock. Satoshi also describes "a file created by the rotating body image display program." Ex-1007 ¶31. A POSITA would have understood that this file represents a particular combination of gear or, in other words, a particular mechanical movement. Satoshi describes that a file "allows . . . for a display of gears 7 / hands 9" without the user have to create the particular combination of gears and hands. Ex-1007 ¶94. A POSITA would have understood that a device, such as the wristwatch of Mooring, could store several different files, each representing a different mechanical movement. A POSITA would have understood that different widgets may correspond to different files representing different mechanical movements, so that a user can select different mechanical movements for display by scrolling widgets as taught in Louch.

227. Thus, it is my opinion Mooring-Satoshi-Louch teaches enabling different mechanical movements selectable by the user for display.

4. Dependent Claim 15

a. Element 15[pre]: The wristwatch of claim 1, wherein:

228. The Mooring-Satoshi combination teaches Claim 1. *See supra* §VIII.A.2; Ex-1020, element 15[pre].

b. Element 15[a]: said display being a display associated with a touch sensor enabling the displacements of at least one finger along at least two different directions to be detected, with the microcontroller being specifically arranged for interpreting signals from the touch sensor, for selecting one screen from among several available screens depending on these signals, and for displaying this screen on the entirety of said display,

229. Mooring-Satoshi in further combination with Louch teaches Element 15[a].

230. Louch describes "a display associated with a touch sensor enabling the displacements of at least one finger along at least two different directions to be detected, with the microcontroller being specifically arranged for interpreting signals from the touch sensor, for selecting one screen from among several available screens depending on these signals, and for displaying this screen on the entirety of said display," as recited Element 15[a]. For example, as shown below in Figure 1F, Louch discloses "a digital watch" with a touch sensitive display area 128. Ex-1009 ¶49.

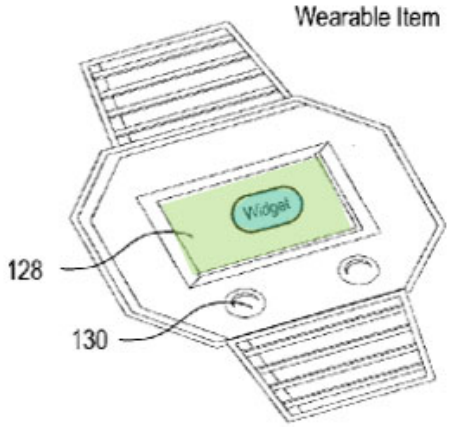

FIG. 1F

Ex-1009, Fig. 1F (annotated).

231. Louch also describes widgets that fill the entire touchscreen display to present information or perform tasks to a user, such as "provide a clock." Ex-1009 ¶¶35, 67. And further explains that a user can use the touchscreen to scroll to different widgets: "In some implementations, the user ***can scroll (horizontally or vertically) through dashboards or widgets*** across the display area 502 by touching the widgets and making the appropriate finger gestures in horizontal or vertical directions." This is shown in Figure 5B below. Ex-1009 ¶80.

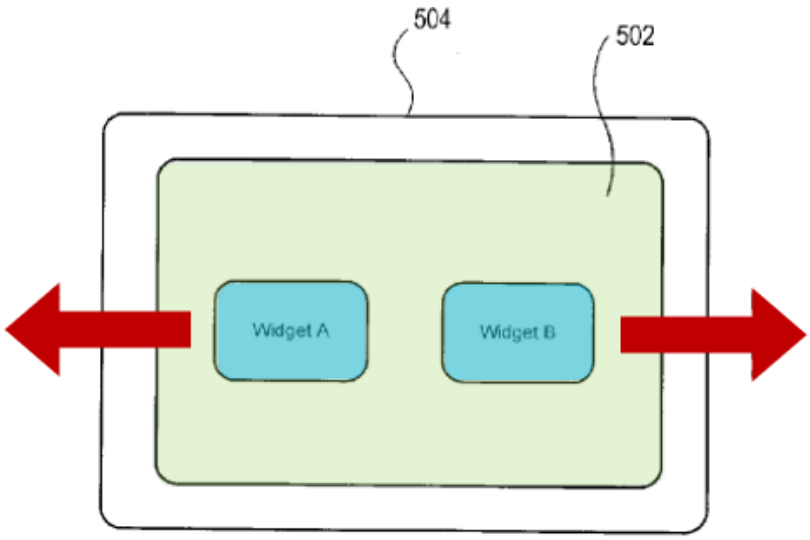

FIG. 5B

Ex-1009, Fig. 5B (annotated).

232. Louch teaches that this selected widget would then take up the entire display: "When a desired dashboard/widget is found, the user can click or touch the dashboard/widget to invoke the widget. In some implementations, when the dashboard/widget is invoked ***the dashboard/widget is displayed to cover the entire display area 502 (full screen)***." Ex-1009 ¶80.

233. Because the wristwatch in Mooring has a touchscreen, it would have been obvious to a POSITA that the scrolling in Louch could apply to the wristwatch in Mooring. And Mooring even teaches a similar interface involving scrolling, but Mooring describes an icon carousel 840 with icons that be scrolled left and right by swiping a finger on the touchscreen. Ex-1005 ¶71.

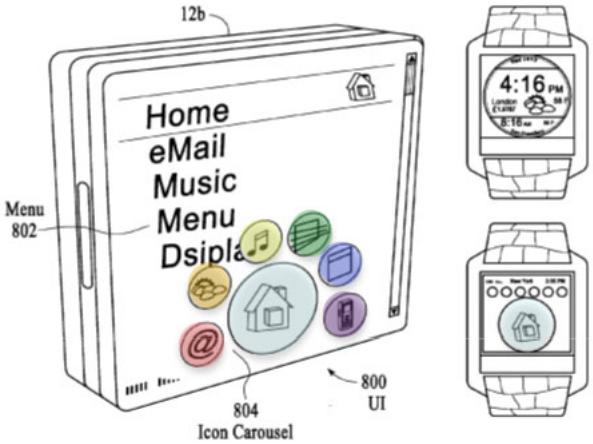

FIG.8

Ex-1005, Fig. 8 (annotated).

234. It would have been obvious to modify Mooring so that the scrolling is used to navigate among different widgets that can fill the entire display as taught Louch. A POSITA would have been motivated to scroll widgets as taught in Louch because the widgets are larger and easier to see than icons. Mooring itself recognizes that icons are difficult to see and thus recommends automatically enlarging the icon in the center position "for ease of viewing." Ex-1005 ¶71. Because the icons are all displayed in icon carousel 804, they are still smaller than the widgets in Louch, which are not all displayed at the same time. And Louch even teaches that widgets "can consume the entire display area." Ex-1009 ¶67. Based on the motivation to improve the ease of viewing on a small display of wristwatch, it would have been obvious to modify Mooring so that the scrolling is used to navigate among different widgets that can fill the entire display as taught Louch.

235. Thus it is my opinion that Mooring-Satoshi-Louch teaches enabling the displacements of at least one finger along at least two different directions to be detected, with the microcontroller being specifically arranged for interpreting signals from the touch sensor, for selecting one screen from among several available screens depending on these signals, and for displaying this screen on the entirety of said display.

c. Element 15[b]: said microcontroller being further specifically arranged so as to cause screens to scroll by in order to replace durably the screen displayed initially by another screen, with the orientation and the direction of scrolling depending on the orientation and direction of said displacement,

236. Mooring-Satoshi in further combination with Louch teaches Element 15[b].

237. As shown by Figure 5B, Louch teaches "caus[ing] screens to scroll by in order to replace durably the screen displayed initially by another screen, with the orientation and the direction of scrolling depending on the orientation and direction of said displacement," as recited in Element 15[b].

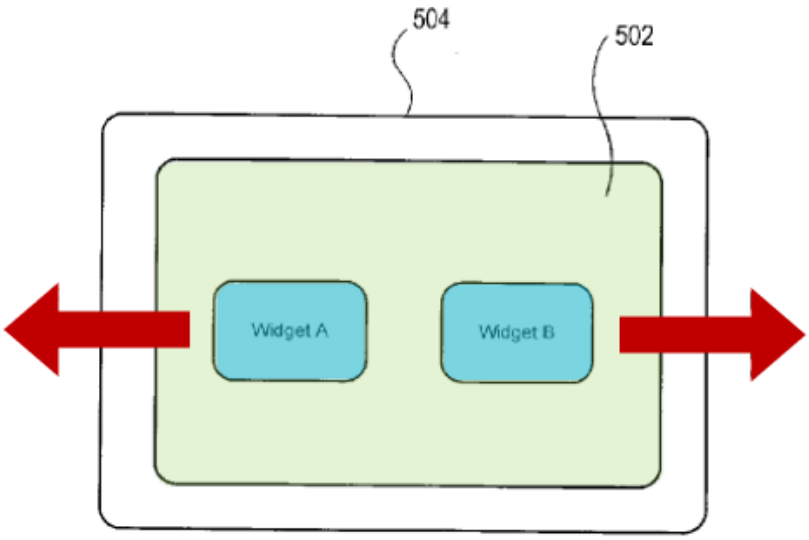

FIG. 5B

Ex-1009, Fig. 5B (annotated).

238. During scrolling, one widget lastingly replaces another so that a user can find a desired widget. Louch states, "When a desired dashboard/widget is found, the user can click or touch the dashboard/widget to invoke the widget. In some implementations, when the dashboard/widget is invoked the dashboard/widget is displayed to cover the entire display area 502 (full screen)." Ex-1009 ¶80.

239. In Louch, the direction of a finger gestures on the touchscreen corresponds to the direction of the scrolling: "In some implementations, the user ***can scroll (horizontally or vertically)*** through dashboards or widgets across the display area 502 by touching the widgets and making the appropriate ***finger gestures in horizontal or vertical directions***." Ex-1009 ¶80. Thus, "the orientation and the direction of scrolling depend[s] on the orientation and direction of said displacement," as recited in Element 15[b].

240. For the same reasons described above for Element 15[a] (§VIII.C.4.b), it would have been obvious to apply the user interface in Louch to the wristwatch taught by the combination of Mooring and Satoshi.

241. Thus, it is my opinion that Mooring-Satoshi-Louch teaches microcontroller being further specifically arranged so as to cause screens to scroll by in order to replace durably the screen displayed initially by another screen, with the orientation and the direction of scrolling depending on the orientation and direction of said displacement.

d. Element 15[c]: wherein at least two of said screens correspond to two distinct mechanical movements that can be selected by the user.

242. Mooring-Satoshi-Louch teaches Element 15[c].

243. Satoshi discloses that a user can select different combinations of gears to simulate the mechanical movement of a clock. *See supra* §VIII.A.6.

244. Satoshi also describes "a file created by the rotating body image display program." Ex-1007 ¶31. A POSITA would have understood that this file represents a particular combination of gear or, in other words, a particular mechanical movement. Satoshi describes that a file "allows . . . for a display of gears 7 / hands 9" without the user have to create the particular combination of gears and hands. Ex-1007 ¶94. A POSITA would have understood that a device, such as the wristwatch of Mooring, could store several different files, each representing a

different mechanical movement. A POSITA would have understood that different widgets may correspond to different files representing different mechanical movements, so that a user can select different mechanical movements for display by scrolling widgets as taught in Louch. *See* Ex-1020, element 15[c].

5. Independent Claim 16

a. Element 16[pre]: Wristwatch comprising:

245. To the extent the preamble is limiting, Mooring-Satoshi teaches the preamble for the same reasons described above for Element 1[pre] (§VIII.A.2.a). *See* Ex-1020, element 16[pre].

b. Element 16[a]: a watchcase;

246. Mooring-Satoshi teaches Element 16[a] for the same reasons described above for Element 1[a] (§VIII.A.2.b). *See* Ex-1020, element 16[a].

c. Element 16[b]: an electronic display in said watchcase;

247. Mooring-Satoshi teaches Element 16[b] for the same reasons described above for Element 1[b] (§VIII.A.2.c). *See* Ex-1020, element 16[b].

d. Element 16[c]: a touch sensor associated with said display and enabling the displacement of at least one finger along at least two different directions to be detected

248. Mooring-Satoshi in further combination with Louch teaches Element 16[c] for the same reasons described above for Element 15[a] (§VIII.C.4.b). *See* Ex-1020, element 16[c].

e. Element 16[d]: a quartz oscillator,

249. Mooring-Satoshi teaches Element 16[d] for the same reasons described above for Element 1[c] (§VIII.A.2.d). *See* Ex-1020, element 16[d].

f. Element 16[e]: a microcontroller being arranged for reproducing on said electronic display a simulation of a mechanical watch movement comprising a gear train visible so as to indicate the time and for synchronizing the displayed time by said displayed mechanical movement with that of said quartz oscillator,

250. Mooring-Satoshi teaches Element 16[e] for the same reasons described above for Element 1[d] (§VIII.A.2.e). *See* Ex-1020, element 16[e].

g. Element 16[f]: said microcontroller being further arranged for interpreting signals from the touch sensor, for selecting one screen from among several available screens depending on these signals, and for displaying this screen on the entirety of said display,

251. Mooring-Satoshi in combination with Louch teaches Element 16[f] for the same reasons described above for Element 15[a] (§VIII.C.4.b) and Element 16[c] (§VIII.C.5.d). *See* Ex-1020, element 16[f].

h. Element 16[g]: said microcontroller being further specifically arranged so as to cause screens to scroll by in order to replace durably the screen displayed initially by another screen, with the orientation and the direction of scrolling depending on the orientation and direction of said displacement,

252. Mooring-Satoshi in combination with Louch teaches Element 16[g] for the same reasons described above for Element 15[b] (§VIII.C.4.c). *See* Ex-1020, element 16[g].

i. Element 16[h]: wherein at least two of said screens correspond to two distinct mechanical movements that can be selected by the user.

253. Mooring-Satoshi teaches Element 16[g] for the same reasons described above for Element 15[c] (§VIII.C.4.d). *See* Ex-1020, element 16[h].

D. Ground 4: Claims 4-5 are obvious over Mooring and Satoshi in further view of Inoue and Tam.

1. A POSITA would have been motivated to combine Mooring and Satoshi's teachings with the teachings of Tam and Inoue and would have had a reasonable expectation of success.

254. It would have been obvious to combine Mooring and Satoshi for the reasons described above (§VIII.A.1).

255. A POSITA would have been motivated to further apply the teachings of Tam and Inoue to Mooring-Satoshi and would have had a reasonable expectation of success in doing so.

256. It would have been obvious to apply the teachings of Inoue to Mooring-Satoshi. Mooring-Satoshi teaches a wristwatch with a touchscreen LCD capable of displaying an analog representation of time (i.e., with hour and minute hands). Ex-1005 ¶¶22, 39; Ex-1007 ¶¶4, 11. Like Mooring-Satoshi, Inoue discloses a wristwatch with a conventional processor and LCD for displaying time. Ex-1010 ¶¶3, 15. Inoue further discloses that such a wristwatch may include a crown and push-buttons as input devices for changing the information displayed on the LCD. *Id.* ¶¶126, 159, 294. It would have been obvious to a POSITA to apply Inoue's teaching to use a crown and push-buttons to control a LCD display on a wristwatch to the LCD-wristwatch of Mooring-Satoshi. A POSITA would have recognized that a crown and push-buttons are common input and control devices in watches. Ex-1016 ("Wristwatches with analog displays generally have a small knob, called the crown, which can be used to adjust the time and, in mechanical watches, wind the spring. . . . Digital watches generally have push-buttons that can be used to make adjustments."). Because users are already familiar with these types of input devices, a POSITA would have been motivated to apply them to control the LCD display of the wristwatch of Mooring-Satoshi to provide users with the convenience of familiar control elements. For example, the use of a crown to adjust the time or date has been a familiar feature of watches for decades. Ex-1016. And, both the challenged patent and Satoshi note the desirability of displaying the mechanical movement and inner

workings of a watch, and providing push-buttons or a crown would enhance this realism and improve the user's experience. Ex 1001, 1:35-46; Ex 1007 ¶4.

257. It would have also been obvious to a POSITA to further apply the teachings of Tam to the wristwatch of Mooring-Satoshi-Inoue. Tam teaches simulation of mechanical watches, as indicated by its title "Physical-Based Simulations of Mechanical Watches and Clocks." Ex-1012, p. 1. In particular, Tam describes simulating internal mechanical watch components, such as the gear train and Swiss lever escapement, to show the kinetics and dynamics of those internal components. *Id.*, p. 1. As discussed above, kinetics and dynamics involves the study of forces and their effect on motion. Ex-1041; Ex-1042. Just as Tam discloses simulating a Swiss lever escapement, a POSITA would have understood that the other internal components of a watch can similarly be simulated and displayed to increase user interest.

258. A POSITA would have understood that the crown on the outside of a watch case includes a crown stem inside the watchcase, as shown below.

Ex-1038. U.S. Patent No. 3,146,580, which issued on Sept. 1, 1964, describes a crown 6c connected to a winding stem, including outer section 8 and inner section 9, as illustrated in Figure 1 and 2 below. Ex-1039, 1:55-57.

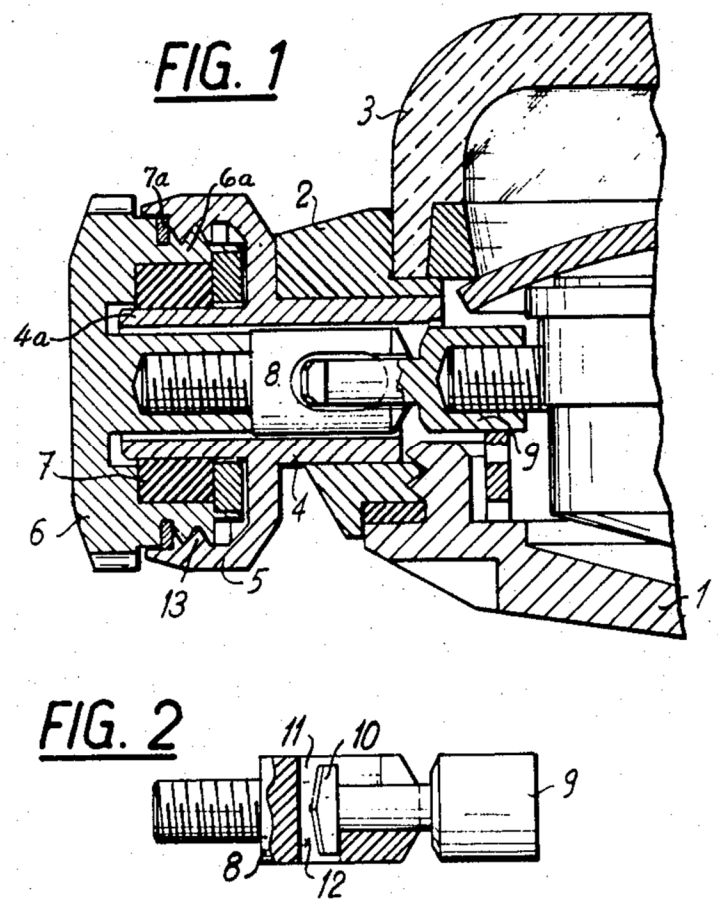

Ex-1039, Figures 1 and 2.

259. A POSITA would have also understood that a push-button interacts with internal components in a mechanical watch. For example, U.S. Patent No. 3,362,154, which issued on Jan. 9, 1968, describes a watch push-button including a head 4 outside the watch case and a stem 1 passing through a tube 2 screwed in the rim of the watch case. Ex-1040, 2:5-9. Figures 1, 2, and 3 show this push-button in different states of compression.

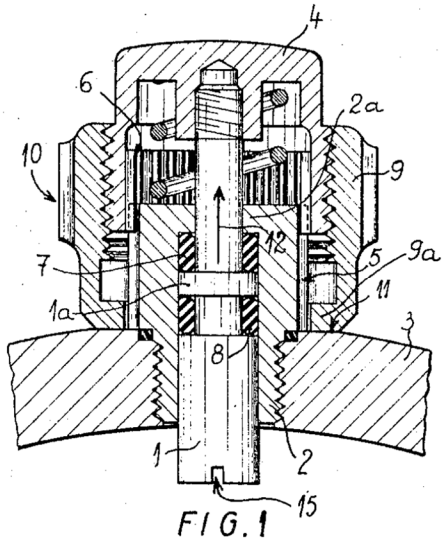

FIG.1

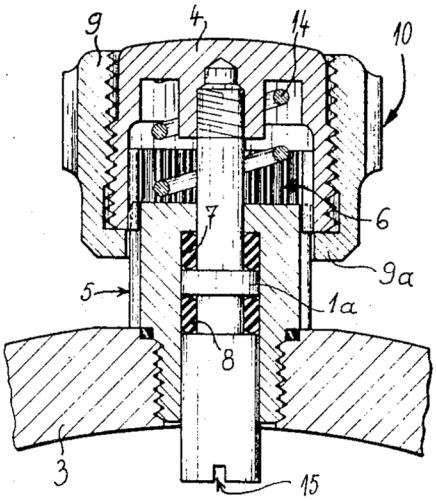

FIG.2

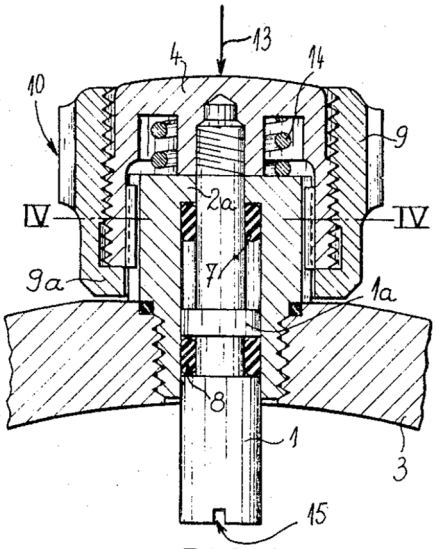

FIG.3

260. It would have been obvious to stimulate the crown's stem and the push-button's internal components (such as a stem), just Tam described simulating and displaying other internal components of a watch.

261. Tam further teaches displaying the simulated watch components, as shown below in Figure 7. Ex-1012, p 4.

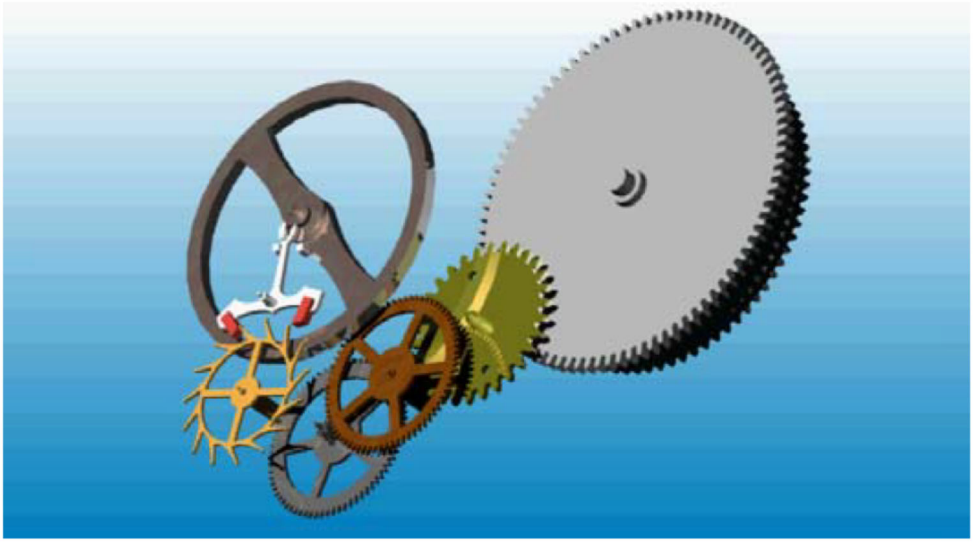

Fig. 7: The model of Swiss Lever Escapement connected to the gear train and the barrel. The escapement is on the left side while the barrel is on the right.

262. Based on Tam's teaching to display the simulated watch components, it would have been obvious to display the internal component (such as the crown stem and push-buttons elements) on the LCD of the wristwatch of Mooring-Satoshi-Inoue. And a POSITA would have been motivated to show the internal workings of a mechanical watch because, as the '033 patent recognizes, it was already known that users enjoy seeing the mechanical movement and other inner working of a mechanical watch. Ex-1001, 1:35-46. Tam and Satoshi teach the same. Ex-1012, p. 1 ("Mechanical watches and clocks are intricate mechanical devices that fascinate millions of people around the world."); Ex-1007 ¶4 (describes displaying gears "to

enhance user interest"). Accordingly, design incentives and market forces would have motivated a POSITA to apply the teaching of Tam (to simulate and display internal watch components) to the combination of Mooring-Satoshi-Inoue, by display the inner workings of the crown and push-buttons on the LCD display.

263. A POSITA would have had a reasonable expectation of success in combining Mooring-Satoshi with Tam and Inoue because these references disclose interrelated teachings based on routine technologies that would have been amenable to various well-understood and predictable combinations.

2. Dependent Claim 4: The wristwatch of claim 1, comprising a crown outside said watchcase; a crown stem being displayed on said display opposite said crown, the position of said displayed crown stem being modified by said microcontroller when said microcontroller detects that said crown has been actuated, so as to simulate a direct action by said crown on said displayed crown stem.

264. In my opinion, Mooring-Satoshi-Inoue-Tam teaches Claim 4.

265. Inoue teaches "a crown outside said watchcase," as recited in Claim 4. As shown below in Figure 1, Inoue discloses a "***crown*** . . . for setting or operating the timepiece." Ex-1010 ¶125. Inoue also teaches that the crown can be used to adjust the information displayed on the LCD display of the wristwatch. *Id.* ¶159.

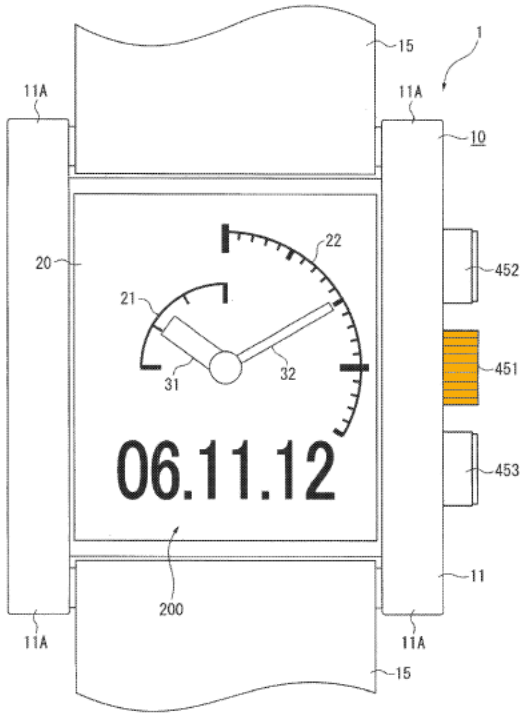

FIG. 1

Ex-1010, Fig. 1 (annotated).

266. Inoue additionally teaches that crown 451 can be "located on the side of the timepiece body 10," as shown above in Figure 1. *Id.* ¶126. And Mooring-Satoshi-Inoue-Tam teaches "a crown stem being displayed on said display opposite said crown, the [internal] position of said displayed crown stem being modified by said microcontroller when said microcontroller detects that said crown has been actuated, so as to simulate a direct action by said crown on said displayed crown stem."

267. As described above (§VIII.E.1), it would have been obvious to apply the Tam's teaching to simulate and display internal watch components to the crown

of Inoue. A POSITA would have been familiar with the use of a crown on conventional watches for winding the watch, and in various positions, for setting the time or a date. A POSITA would have expected a crown on a simulated watch to have similar functionality and would have motivated to include a crown on the watch of Mooring-Satoshi-Inoue-Tam to enhance the realism of the simulated watch display. Furthermore, given the known desire of users to visualize the internal workings of a mechanical watch, a POSITA would have been motivated to include simulations of the internal components with which a crown interacts in order to perform such functions as setting a time or a date value. Based on Tam, it would have been obvious to simulate and display the movement of the crown stem. *See supra* §VIII.E.1. And so it would have been obvious to display "a crown stem . . . on said display opposite said crown, the position of said displayed crown stem being modified by said microcontroller when said microcontroller detects that said crown has been actuated, so as to simulate a direct action by said crown on said displayed crown stem," as recited in Claim 4.

3. Dependent Claim 5: The wristwatch of claim 1, comprising a push-button outside said watchcase; an element displayed on said display opposite said push-button, the position of said element being modifiable by said microcontroller when said microcontroller detects that said push-button has been actuated, so as to simulate a direct action by said push-button on said displayed element.

268. In my opinion, Mooring-Satoshi-Inoue-Tam teaches Claim 5.

269. As shown below in Figure 1, Inoue discloses buttons 452 and 453 "for setting or operating the timepiece." Ex-1010 ¶125. Inoue teaches that buttons 452 and 453 can be used to adjust the information displayed on the LCD display of the wristwatch. *Id.* ¶159.

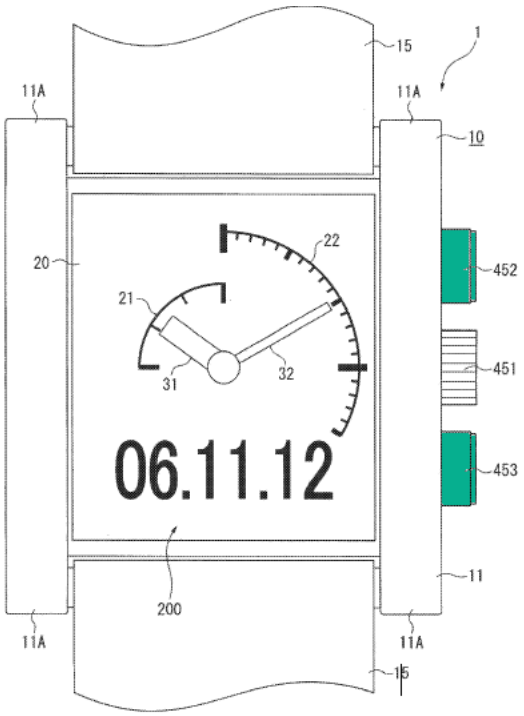

FIG. 1

Ex-1010, Fig. 1 (annotated).

270. Inoue also teaches that buttons 452 and 453 can be "located on the side of the timepiece body 10," as shown above in Figure 1. *Id.* ¶126. A POSITA would have been aware that push buttons on the side of a conventional watch can be used to access certain "complications," or other watch functions, such as starting or stopping a chronograph. *See, e.g.,* Ex-1050 (describing pushers, or push buttons

used with a watch for controlling a chronograph or for other functions). In light of Mooring, Satoshi, and Tam, a POSITA would have understood that Inoue's push buttons would include simulations of "an element displayed on said display opposite said push-button, the position of said element being modifiable by said microcontroller when said microcontroller detects that said push-button has been actuated, so as to simulate a direct action by said push-button on said displayed element," as recited in Claim 4. This is because a user would have had an interest in the inner workings of a watch mechanism and would have desired to see how a push button would interact with internal watch components to initiate functions such as starting or stopping a chronograph. Thus, as described above (§VIII.E.1), it would have been obvious to apply the Tam's teaching to simulate and display internal watch components to the push buttons of Inoue. Based on Tam, it would have been obvious to simulate and to display the movement of these internal components. *See supra* §VIII.E.1. And so it would have been obvious to display "an element . . . opposite said push-button, the position of said element being modifiable by said microcontroller when said microcontroller detects that said push-button has been actuated, so as to simulate a direct action by said push-button on said displayed element," as recited in Claim 5.

E. Ground 5: Claims 6-10 and 13 are obvious over Mooring and Satoshi in further view of Tam and Ruchonnet.

1. A POSITA would have been motivated to combine Mooring and Satoshi's teachings with the teachings of Tam and Ruchonnet and would have had a reasonable expectation of success.

271. It would have been obvious to combine Mooring and Satoshi for the reasons described above (§VIII.A.1).

272. A POSITA would have been motivated to apply the teachings of Tam and Ruchonnet to Mooring-Satoshi and would have had a reasonable expectation of success in doing so. Tam teaches simulating the internal components of watches, as indicated by its title, "Physical-Based Simulation of Mechanical Watches and Clocks. Ex-1012, p. 1. In particular, Tam teaches simulating internal mechanical watch components, such as the Swiss Lever Escapement shown below in Figure 7 below. *Id.*, p. 1, 4.

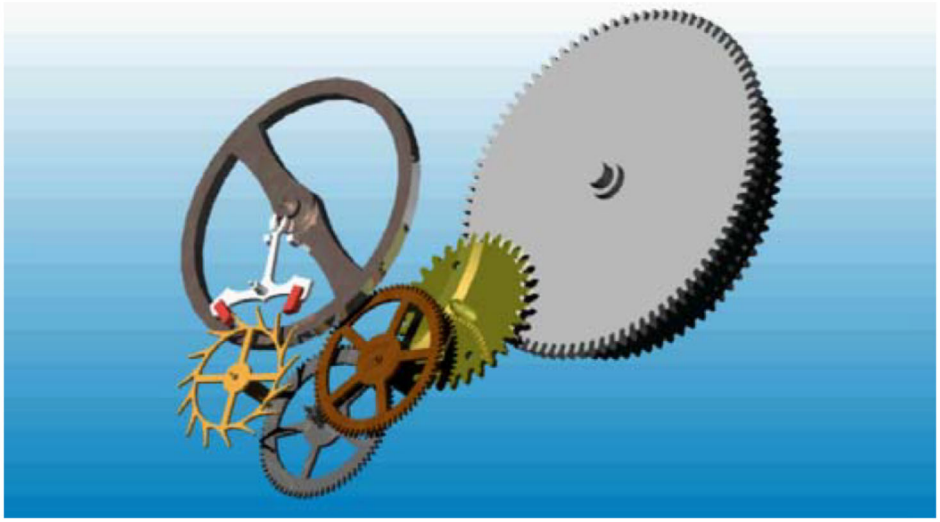

Fig. 7: The model of Swiss Lever Escapement connected to the gear train and the barrel. The escapement is on the left side while the barrel is on the right.

273. Based on Tam's teaching to simulate and display internal watch components, it would have been obvious to simulate and display internal watch components on the LCD of the wristwatch of Mooring-Satoshi.

274. Ruchonnet describes a mechanical watch with various internal components, including a "gear train" (Ex-1011 ¶4), an "oscillating mass" (*id.* ¶35), a "regulating organ" (*id.* ¶4), a "balance" (*id.*), a "tourbillon" (*id.*), and a regulating organ with a balance, a returning element, and an escapement (i.e., "a regulating organ . . . comprising an escapement and a sprung balance"). *Id.* In view of Tam's teachings to simulate and display internal components of a mechanical watch, it would have been obvious to simulate and display these internal components taught in Ruchonnet.

275. A POSITA would have been motivated to show the internal workings of a mechanical watch because, as the '033 Patent admits, it was already known that users enjoy seeing the mechanical movement and other inner working of a mechanical watch. Ex-1001, 1:35-46. Tam and Satoshi teach the same. Ex-1012, p. 1 ("Mechanical watches and clocks are intricate mechanical devices that fascinate millions of people around the world."); Ex-1007 ¶4 (describes displaying gears "to enhance user interest"). Thus, design incentives and market forces would have motivated a POSITA to combine the teachings of Mooring, Satoshi, Tam, and Ruchonnet to result in a wristwatch displaying on a touchscreen a simulation of a mechanical watch movement, including internal watch components (such as an oscillating mass, a regulating organ, a balance, a tourbillon, and a regulating organ with a balance, a returning element, and an escapement).

276. Moreover, based on the teachings of Tam, a POSITA would have understood that a realistic simulation and display of the internal components involves calculating the forces operating on those components. Tam teaches simulating the "kinetics" and "dynamic" of the internal watch components. Ex-1012, p. 1. As discussed above, kinetics and dynamics involves the study of forces and their effect on motion. Ex-1041; Ex-1042. Tam's simulation calculates the forces placed on the simulated internal watch components. For example, Tam simulates the movement of a Graham escapement. Ex-1012, p. 2. Tam describes

that this escapement includes a pendulum, which "requires a push to jump start." *Id.* A POSITA would have realized that Tam calculates the force of the push and the force of gravity to simulate the movement and position of the pendulum. And as another example, Tam states that for the Swiss lever escapement simulation, "a force input is added on the balance wheel to simulate the effect of hairspring." Ex-1012, p. 4.

277. Based on the teachings a Tam, a POSITA would have been motivated to use the accelerometer (already in the wristwatch based on Mooring) to measure the forces caused by changes in motion (accelerations) and applied to the internal components. The wristwatch of Mooring-Satoshi includes an accelerometer, as shown below in Figure 6.

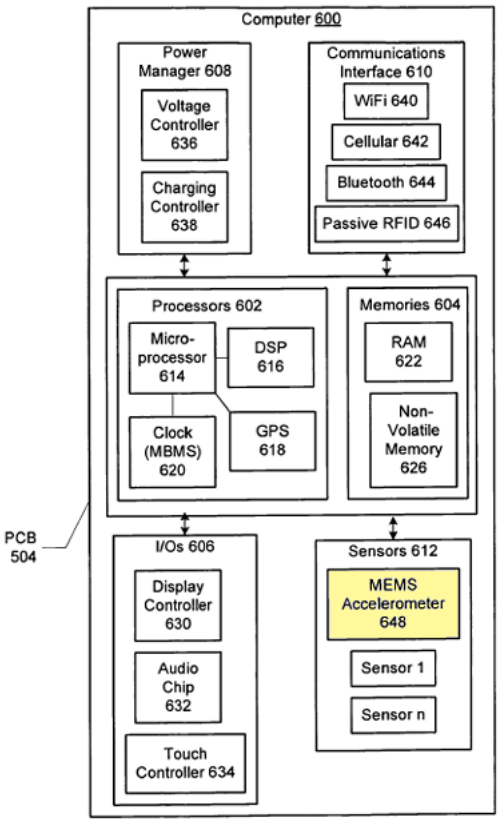

FIG. 6

Ex-1005, Figure 6 (annotated).

278. Mooring states the "MEMS accelerometer 648 may be used to measure information such as position, motion, tilt, shock, and vibration for use by microprocessor 614." Ex-1005 ¶65. A POSITA would have understood that the accelerometer measures the forces caused by changes in motion (accelerations) and applied to the wristwatch of Mooring. Ex-1045. As taught in Tam, a POSITA would have motivated to use the information from the accelerometer to calculate a more realistic simulation of the internal watch components. It would have been obvious

to a POSITA to adjust the position and movement of the simulated internal components based on the information from the accelerometer.

2. Dependent Claim 6: The wristwatch of claim 1, further comprising an accelerometer, said microcontroller being arranged for modifying the position of at least one of said elements of said movement according to the data from said accelerometer.

279. Mooring-Satoshi-Tam-Ruchonnet teaches Claim 6.

280. As described above, Mooring-Satoshi teaches the wristwatch of Claim 1, which includes touchscreen displaying a simulation of a mechanical watch movement comprising a gear train. *See supra* VIII.A.1-2.

281. And, as shown below in Figure 6, Mooring's wristwatch includes an "accelerometer," as recited in Claim 6.

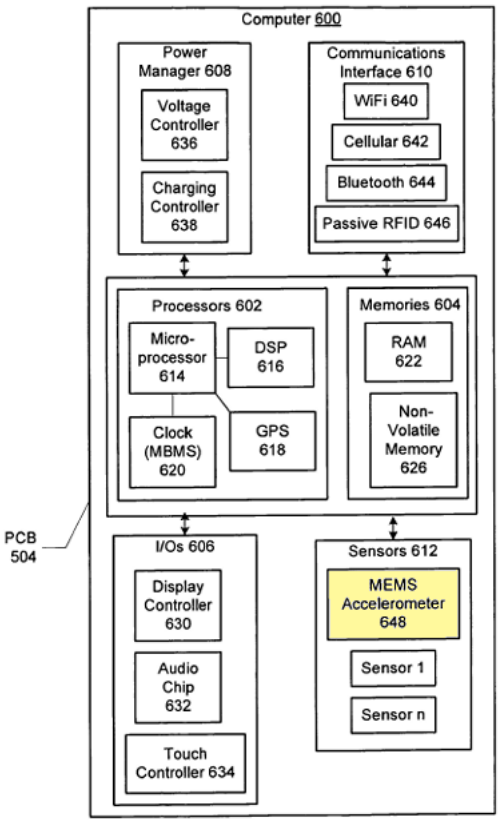

FIG. 6

Ex-1005, Fig. 6 (annotated).

282. Mooring-Satoshi-Tam-Ruchonnet also teaches "said microcontroller being arranged for modifying the position of at least one of said elements of said movement according to the data from said accelerometer," as recited in Claim 6. As described above (§VIII.E.1), it would have been obvious to apply the teachings of Tam and Ruchonnet to simulate and display the internal components of a mechanical watch, and it would have been obvious to a POSITA to adjust the position and movement of the simulated internal components based on information from the accelerometer.

283. Thus, in my opinion, Mooring-Satoshi-Tam-Ruchonnet teaches a microcontroller being arranged for modifying the position of at least one of said elements of said movement according to the data from said accelerometer.

3. Dependent Claim 7: The wristwatch of claim 6, wherein said displayed mechanical movement is an automatic movement with an oscillating mass, the position of said displayed oscillating mass depending on an output signal from said accelerometer.

284. Mooring-Satoshi-Tam-Ruchonnet teaches Claim 7.

285. Tam and Ruchonnet teach displaying "an automatic movement with an oscillating mass," as recited in Claim 7. As described above (§VIII.E.1), it would have been obvious to apply the teachings of Tam and Ruchonnet to simulate and display the internal components of a mechanical watch. Ruchonnet discloses a mechanical watch with an "oscillating mass." Ex-1011 ¶¶30, 35, 44.

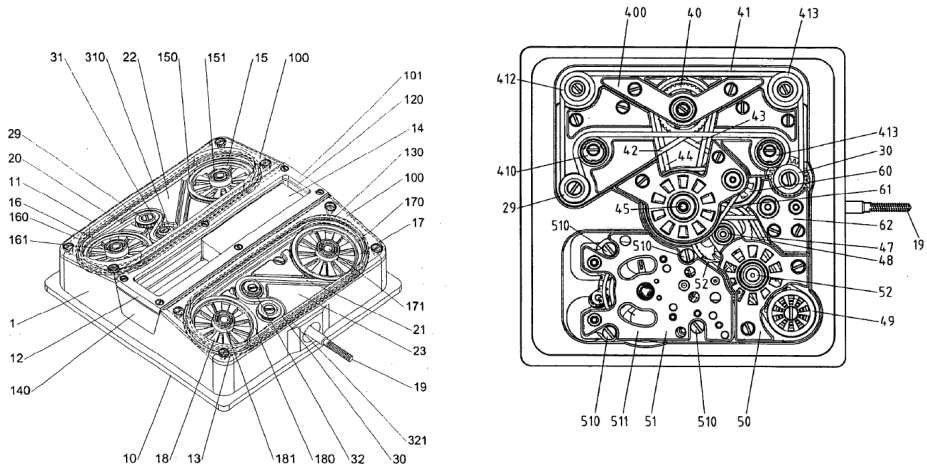

Fig. 4

286. Based on the teachings of Tam and Ruchonnet, it would have been obvious to display a simulated mechanical movement including "an automatic movement with an oscillating mass," as recited in Claim 7.

287. And Mooring-Satoshi-Tam-Ruchonnet further teaches that "the position of said displayed oscillating mass depend[s] on an output signal from said accelerometer," as recited in Claim 7. As described above (§VIII.E.1), it would have been obvious to adjust the position and movement of simulated internal components (such as the oscillating mass) based on information from the accelerometer of Mooring.

288. Thus, in my opinion, Mooring-Satoshi-Tam-Ruchonnet teaches a displayed movement being an automatic movement with an oscillating mass, the position of said displayed oscillating mass depending on an output signal from said accelerometer.

4. Dependent Claim 8: The wristwatch of claim 6, wherein said displayed mechanical movement comprises a regulating organ with a balance and/or a tourbillon displayed on said display, the position of said displayed balance and/or tourbillon depending on an output signal from said accelerometer.

289. Mooring-Satoshi-Tam-Ruchonnet teaches Claim 8.

290. Tam and Ruchonnet teach displaying a "mechanical movement compris[ing] a regulating organ with a balance and/or a tourbillon displayed on said

display," as recited in Claim 8. As described above (§VIII.E.1), it would have been obvious to apply the teachings of Tam and Ruchonnet to simulate and display the internal components of a mechanical watch. And Ruchonnet discloses a mechanical watch with a regulating organ with a balance and/or a tourbillon. Ex-1011 ¶¶4 ("***regulating organ*** . . . comprising an escapement and a sprung ***balance*** that determines the watch's running"), 45 (stating the regulating organ may be a "***tourbillon***").

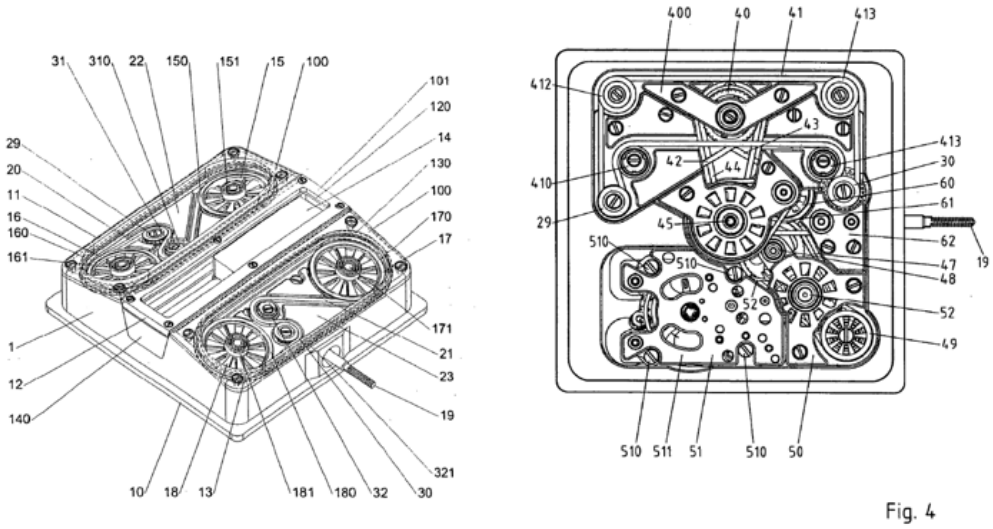

291. Based on the teachings of Tam and Ruchonnet, it would have been obvious to display a "mechanical movement compris[ing] a regulating organ with a balance and/or a tourbillon displayed on said display."

292. And Mooring-Satoshi-Tam-Ruchonnet also teaches that "the position of said displayed balance and/or tourbillon depend[s] on an output signal from said accelerometer," as recited in Claim 8. As described above (§VIII.E.1), it would have

been obvious to adjust the position and movement of simulated internal components (such as the balance and/or tourbillon) based on information from the accelerometer of Mooring.

5. Dependent Claim 9: The wristwatch of claim 1, wherein said displayed mechanical movement comprises a regulating organ with a balance, a returning element and an escapement, the microcontroller being arranged for calculating and displaying a simulation of the oscillations of said displayed regulating organ taking into account the mass of said balance and the rigidity of said returning element, wherein the displayed time depends on said simulation.

293. Mooring-Satoshi-Tam-Ruchonnet teaches Claim 9.

294. Tam and Ruchonnet teach displaying a "mechanical movement compris[ing] a regulating organ with a balance, a returning element and an escapement," as recited in Claim 9. As described above (§VIII.E.1), it would have been obvious to apply the teachings of Tam and Ruchonnet to simulate and display the internal components of a mechanical watch. And Ruchonnet discloses a mechanical watch with a regulating organ with a balance, a returning element and an escapement. Ex-1011 ¶4 ("***regulating organ*** . . . comprising an ***escapement*** and a ***sprung balance*** that determines the watch's running").

295. A "sprung balance" discloses a balance and a returning element. The word "sprung" indicates a spring (likely a hairspring) is the returning element. *See* Ex-1046.

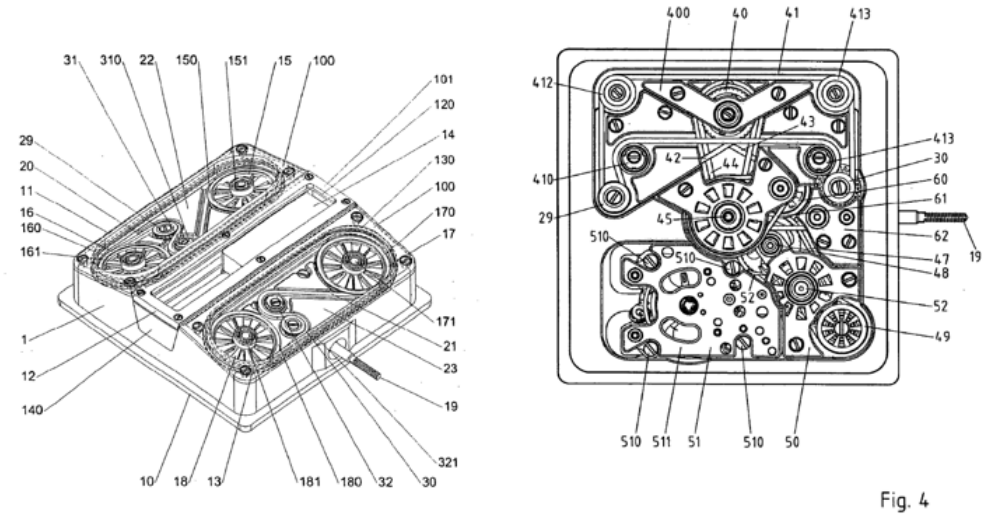

Fig. 4

296. Based on the teachings of Tam and Ruchonnet, it would have been obvious to display a "a "mechanical movement compris[ing] a regulating organ with a balance, a returning element and an escapement."

297. Mooring-Satoshi-Tam-Ruchonnet also teaches that "the microcontroller calculat[es] and display[s] a simulation of the oscillations of said displayed regulating organ taking into account the mass of said balance and the rigidity of said returning element," as recited in Claim 9. Tam teaches to simulate internal watch components, including the effect of forces on those internal watch components. *See supra* §VIII.E.1. Tam states, "In this simulation model, a force input is added on the balance wheel to simulate the effect of hairspring." Ex-1012, p. 4. Because the rigidity of the returning element produces a force like a hairspring, it would have been obvious that a simulation of the returning element would have to take into account its rigidity. Similarly, it would have been obvious that simulating

a balance would have to take into account its mass, just as the simulation of the pendulum in Tam had to take into account its mass. As described above (§VIII.E.1), a POSITA would have been motivated to apply Tam's teachings to make the display of the simulated oscillations of the regulating organ more realistic.

298. Mooring-Satoshi-Tam-Ruchonnet also teaches "the displayed time depends on said simulation," as recited in Claim 9. Satoshi teaches that the rotation rate of the driving gear and gear ratios determines the movement of the watch hands. Ex-1007 ¶¶4, 42. Just as the movement of the simulated gears in Satoshi determines the movement of the hands, the movement the internal watch components in a simulated mechanical movement determines the movement of the watch hands and thus the displayed time. As a result, the display time depends on the simulation.

6. Dependent Claim 10: The wristwatch of claim 9, comprising means for modifying the running of said displayed regulating organ according to the accelerations to which the watch is subjected.

299. Mooring-Satoshi-Tam-Ruchonnet teaches Claim 10.

As discussed above, this term should be construed under 35 U.S.C. §112(6). The function is "modifying the running of said displayed regulating organ according to the accelerations to which the watch is subjected," and the corresponding structure is the closest algorithm in the specification:

(1) assigning a virtual mass to the regulating organ (Ex-1001, 3:43-45);

(2) calculating the forces to which the regulating organ is subjected according to the measured acceleration and any change in the position of the regulating organ due to those forces (*Id.*, 3:45-47); and

(3) displaying the new position of the regulating organ (*Id.*, 3:47-48).

300. It would have been obvious to a POSITA that the combination of Mooring-Satoshi-Tam-Ruchonnet employs the above algorithm. Tam teaches simulating internal watch components, including simulating the effect of forces on those internal watch components. *See supra* §VIII.E.1. Tam states: "In this simulation model, a force input is added on the balance wheel to simulate the effect of hairspring." Ex 1012, p. 4. As another example, Tam describes a Graham Escapement mechanism with a pendulum and states the "whole movement launches by a push on the pendulum." *Id.*, p. 2. Tam's Figure 5 (below) shows the displacement of the pendulum over time. *Id.*, p. 3.

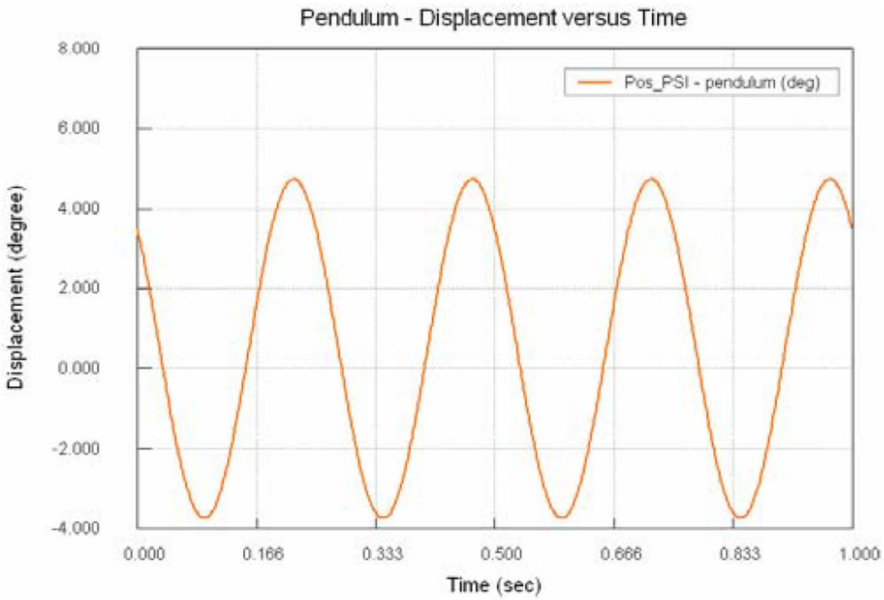

Fig. 5: Displacement versus time of the pendulum.

301. It would have been obvious to use this same algorithm to simulate the regulating organ in Mooring-Satoshi-Tam-Ruchonnet: (1) assigning a virtual mass to the regulating organ; (2) calculating the forces to which the regulating organ is subjected according to the measured acceleration from the accelerometer of Mooring and calculating any change in the position of the pendulum due to those forces; and (3) displaying the new position of the regulating organ. Thus, it is my opinion that this combination teaches the Claim 10.

7. Dependent Claim 13: The wristwatch of claim 1, arranged for displaying said mechanical movement on the whole surface of the electronic display so as to occupy the position and the dimensions of a real mechanical movement.

302. As described above, the Mooring-Satoshi combination teaches Claim 13. *See supra* (§VIII.A.5). Alternatively, Mooring-Satoshi in combination with Tam and Ruchonnet teaches Claim 13.

303. Ruchonnet discloses a "skeleton-type" watch in which the dial is glass or transparent material, allowing an observer "to check the movement's running." Ex-1011 ¶31. Tam teaches simulating mechanical watch components, such as the Swiss lever escapement, to show the "kinetics" and "dynamics" of escapements. Ex-1012, p. 1. As I discussed above, kinetics and dynamics involves the study of forces and their effect on motion. Ex-1041; Ex-1042. It would have been obvious apply the teachings of Tam to simulate a skeleton watch (as taught in Ruchonnet) for display on the LCD display of the wristwatch of Mooring-Satoshi.

304. As taught in Tam, the simulation would involve simulating the position and the dimensions of a real mechanical movement, namely the skeleton-type mechanical watch in Ruchonnet. A POSITA would have understood that, in skeleton-type wristwatch, the mechanical movement occupies the face of wristwatch. Ex-1034. Accordingly, simulating a skeleton watch for display on the LCD display of the wristwatch of Mooring-Satoshi would involve "displaying said

mechanical movement on the whole surface of the electronic display so as to occupy the position and the dimensions of a real mechanical movement," as recited in Claim 13.

F. Ground 6: Claim 18 is obvious over Mooring and Satoshi in further view of Lee, Tam, Inoue, and Ruchonnet.

305. It would have been obvious to apply the teaching of Lee to Mooring-Satoshi for the reasons described above in Ground 2. *See supra* §VIII.B.1.

306. It would have been obvious to further apply the teachings of Tam and Inoue to Mooring-Satoshi for the reasons described above in Ground 4. *See supra* §VIII.d.1.

307. It would have been obvious to further apply the teachings of Tam and Ruchonnet to Mooring-Satoshi for the reasons described above in Ground 5. *See supra* §VIII.E.1.

308. As shown in Exhibit 1020, the limitations in Claim 18 correspond to the limitations already discussed above.

309. Element 18[a] corresponds to Element 2[b] (§VIII.B.2.c).

310. Element 18[b] corresponds to Claim 4 (§VIII.D.2).

311. Element 18[c] corresponds to Claim 5 (§VIII.D.3).

312. Element 18[d] corresponds to Claim 6 (§VIII.E.2).

313. Element 18[e] corresponds to Claim 7 (§VIII.E.3).

314. Element 18[f] corresponds to Claim 8 (§VIII.E.4).

315. Element 18[g] corresponds to Claim 9 (§VIII.E.5).

316. Element 18[h] corresponds to Claim 10 (§VIII.E.6).

317. Element 18[i] corresponds to either Claim 11 (§VIII.A.3) or Claim 12 (§VIII.A.4).

318. Element 18[j] corresponds to Claim 13 (§VIII.E.7).

319. Element 18[j] corresponds to Claim 14 (§VIII.C.3).

320. So, for the reasons described above for these corresponding claims and elements, Mooring-Satoshi-Lee-Tam-Ruchonnet teaches Claim 18.

IX. CONCLUSION

321. For the reasons set forth above, I believe that Claims 1-19 of the ’033 Patent are unpatentable in view of the prior art.

322. In signing this declaration, I recognize that it will be filed as evidence in a contested case before the Patent Trial and Appeal Board of the United States Patent and Trademark Office. I also recognize that I may be subject to cross-examination in the case and that cross-examination will take place in the United States. If cross-examination is required of me, I will appear for cross-examination within the United States during the time allotted for cross-examination.

323. I reserve the right to supplement my opinions in the future to respond to any arguments that the Patent Owner raises and to take into account new information as it becomes available to me.

324. I declare under penalty of perjury under the laws of the United States of America that the foregoing is true and correct.

Respectfully Submitted,

Benjamin B. Bederson

Date: October 12, 2023