US 20090196124A1

(19) United States

(12) Patent Application Publication

Mooring

(10) Pub. No.: US 2009/0196124 A1

(43) Pub. Date: Aug. 6, 2009

(54) MODULAR MOVEMENT THAT IS FULLY FUNCTIONAL STANDALONE AND INTERCHANGEABLE IN OTHER PORTABLE DEVICES

(75) Inventor: **David J. Mooring**, Los Altos Hills, CA (US)

Correspondence Address:
STRATEGIC PATENT GROUP, P.C.
P.O. BOX 1329
MOUNTAIN VIEW, CA 94042 (US)

(73) Assignee: **PILLAR VENTURES, LLC**, Los Altos, CA (US)

(21) Appl. No.: **12/024,067**

(22) Filed: **Jan. 31, 2008**

Publication Classification

(51) **Int. Cl.**
G04B 37/00 (2006.01)
G04C 3/00 (2006.01)

(52) **U.S. Cl.** **368/204**; 368/276

(57) **ABSTRACT**

A portable device comprising a modular movement is disclosed. The modular movement has a body housing a plurality of layers that include a top layer of glass, and a movement subassembly for displaying information, including time, wherein the modular movement includes all parts necessary for power and operation, including the displaying of the information, such that the modular movement is fully functional standalone. The portable device further includes a case, which includes a receptacle for removably receiving the modular movement without need for a tool, such that the modular movement is user-interchangeable with another case of another portable device.

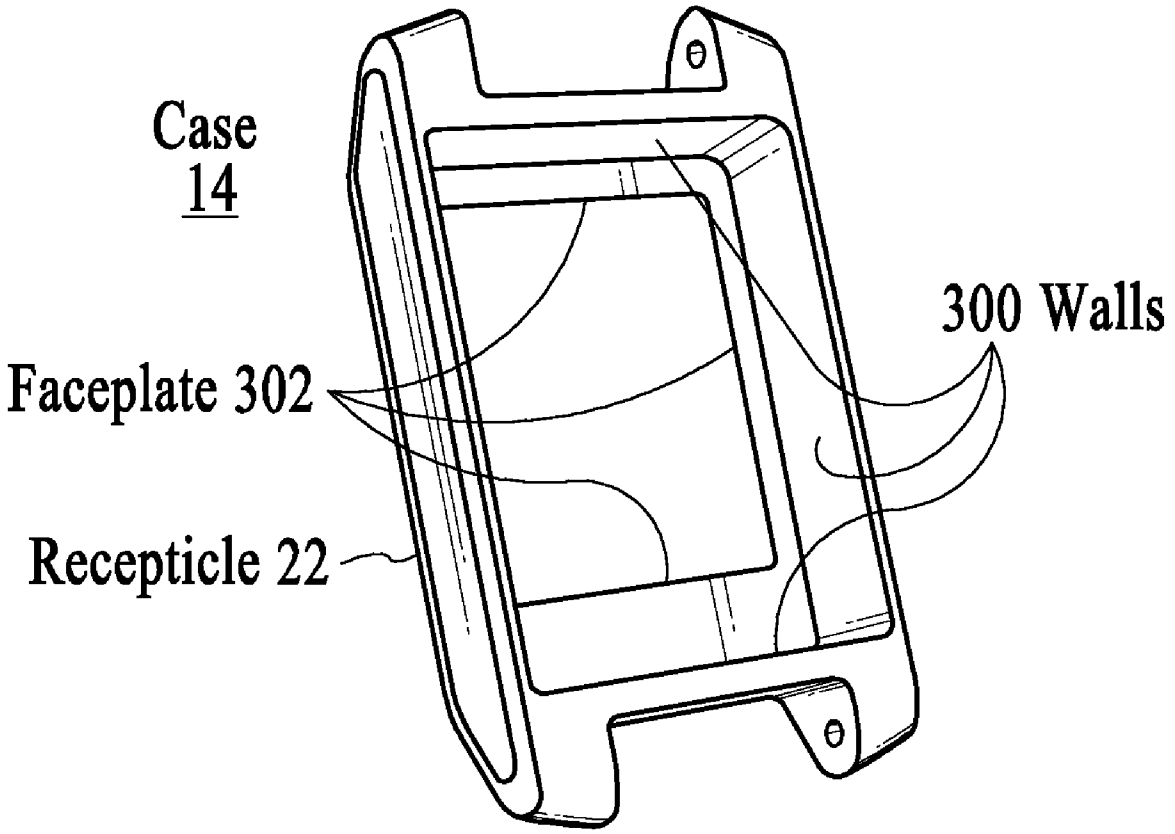

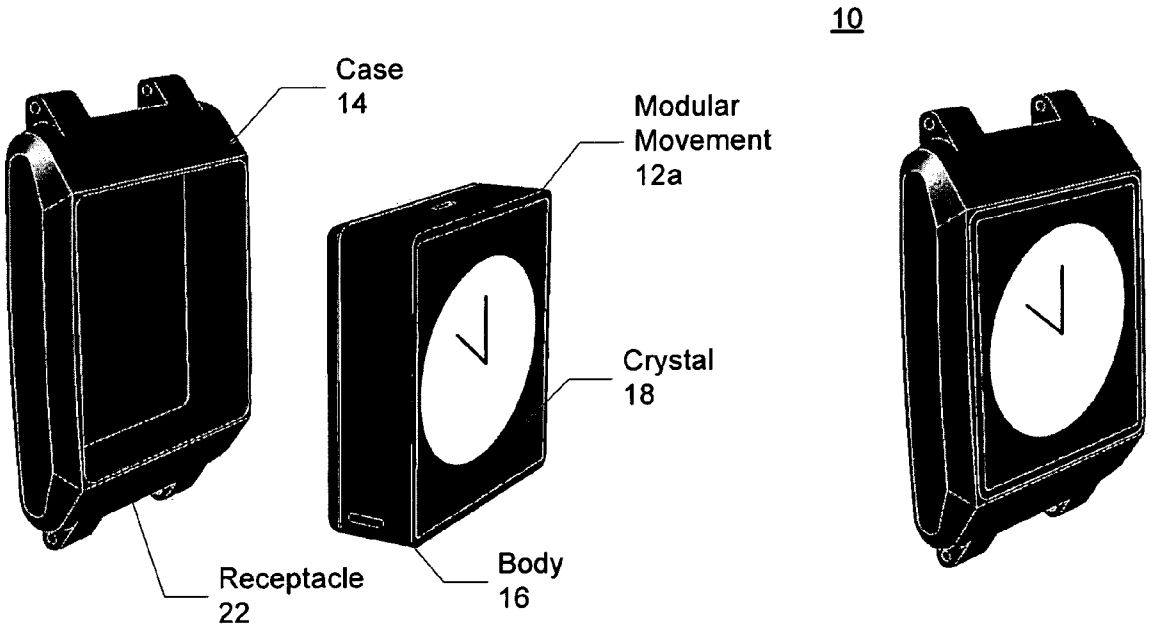
10
Case
14
Modular
Movement
12a
Crystal
18
Receptacle
22
Body
16

FIG. 1A

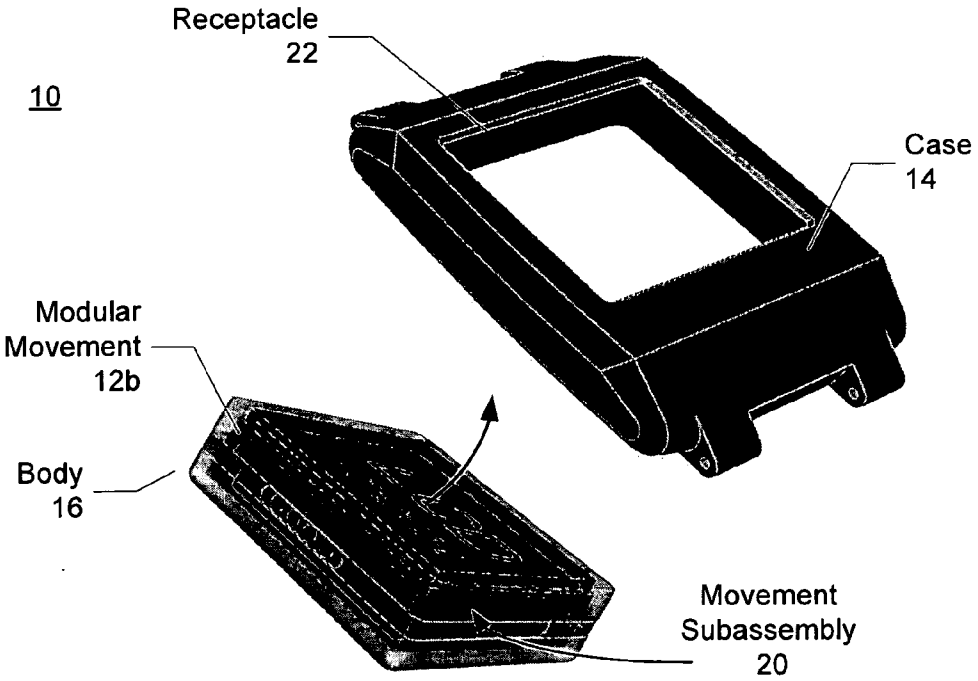
Receptacle
22
10
Case
14
Modular
Movement
12b
Body
16
Movement
Subassembly
20

FIG. 1B

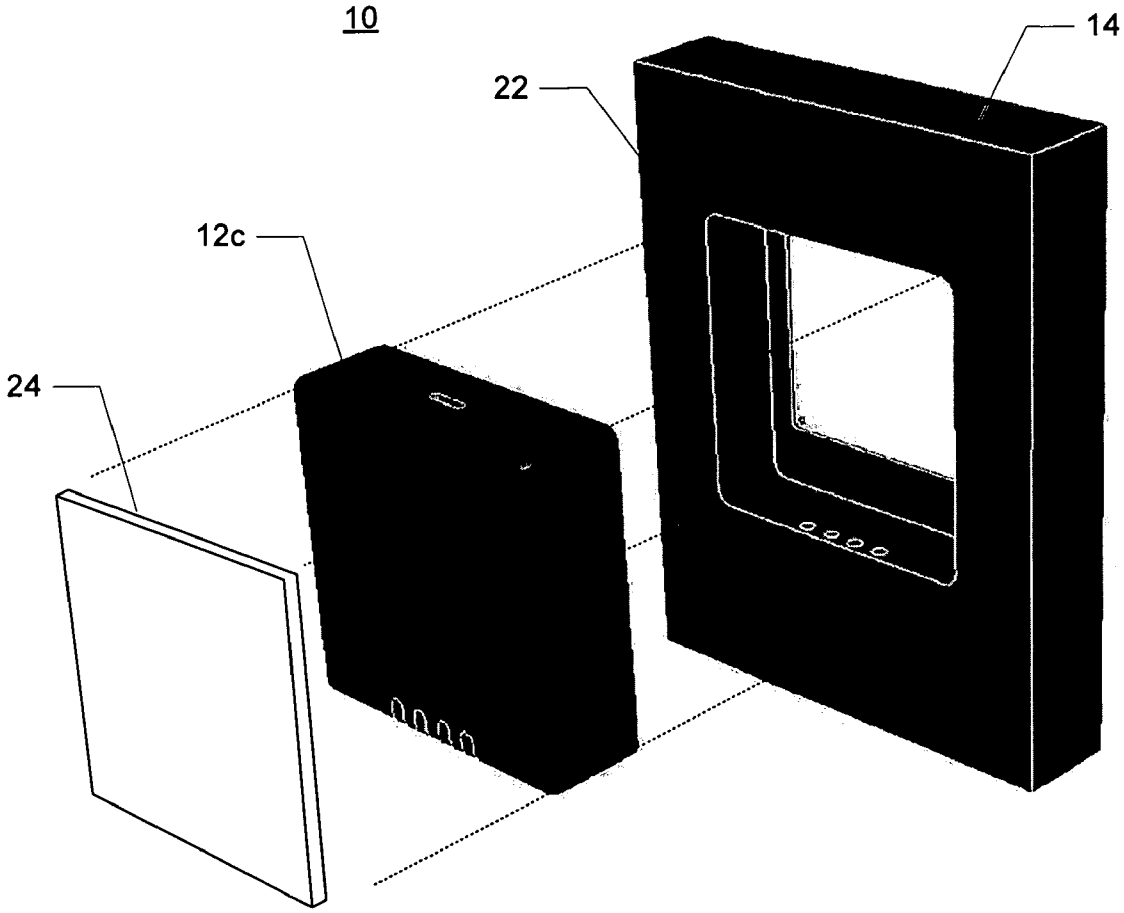

FIG. 1C

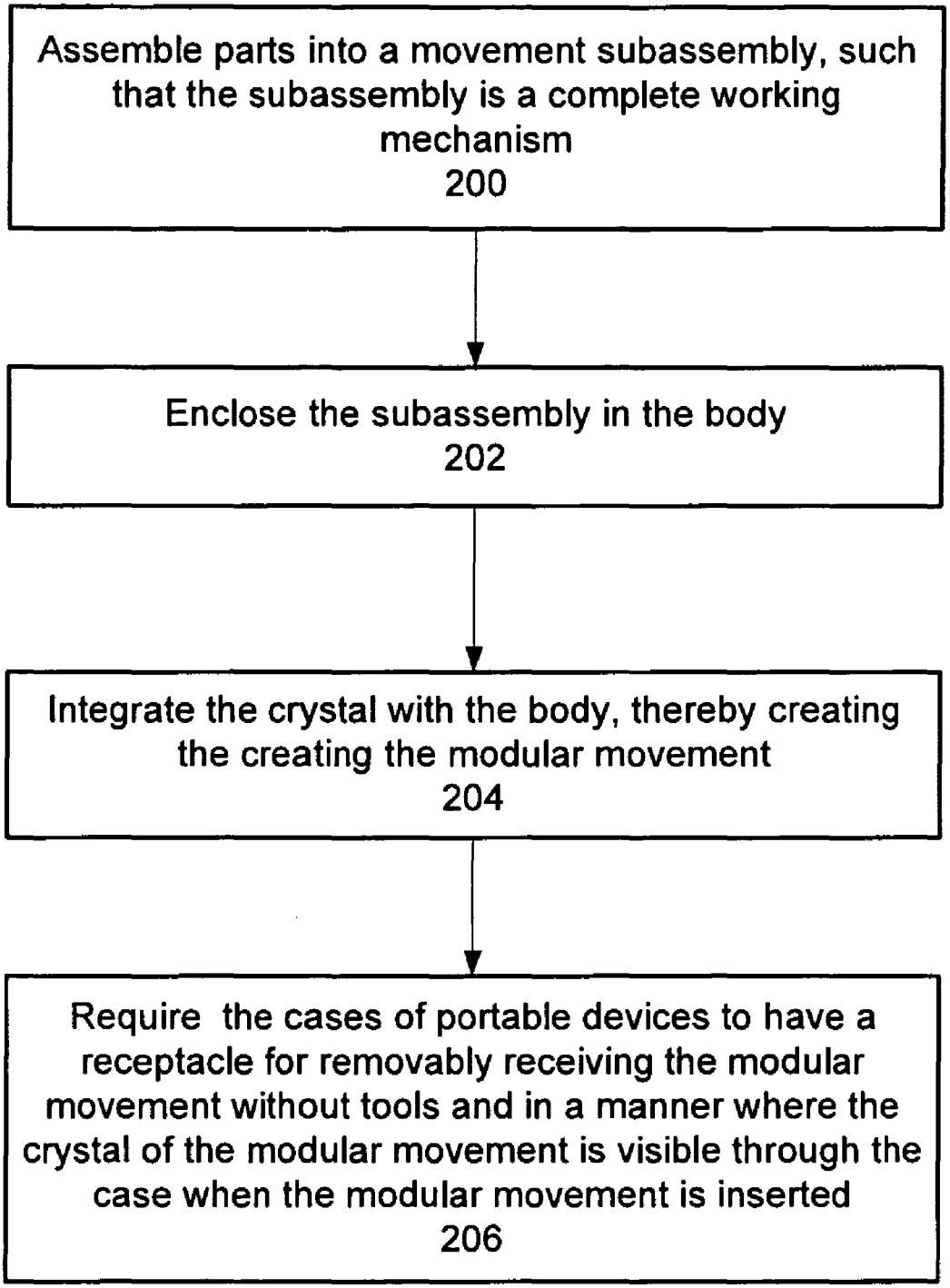
Assemble parts into a movement subassembly, such that the subassembly is a complete working mechanism
200
Enclose the subassembly in the body
202
Integrate the crystal with the body, thereby creating the creating the modular movement
204
Require the cases of portable devices to have a receptacle for removably receiving the modular movement without tools and in a manner where the crystal of the modular movement is visible through the case when the modular movement is inserted
206

FIG. 2

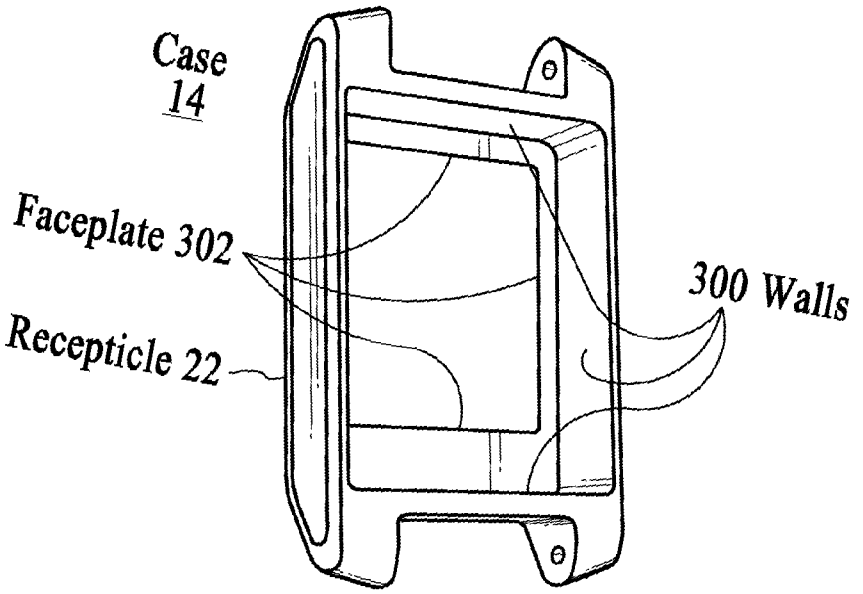

FIG.3

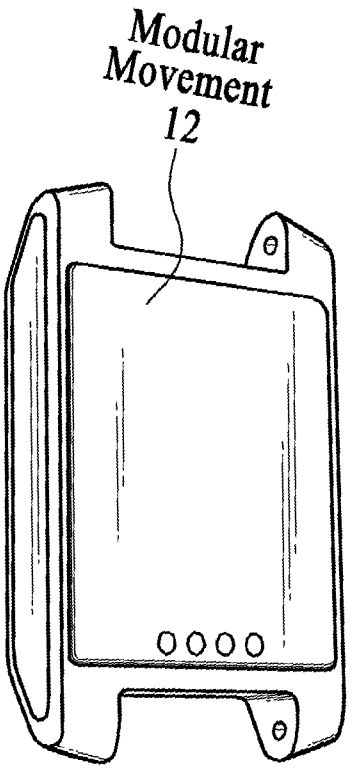

FIG.4A

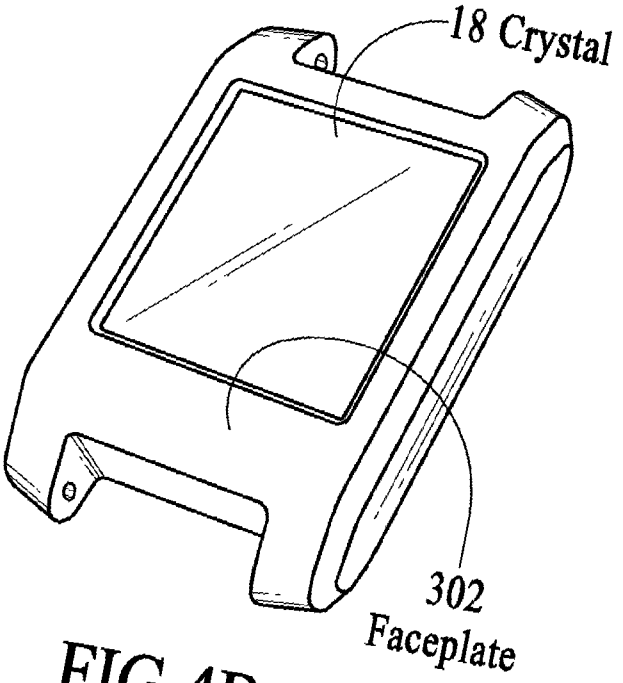

FIG.4B

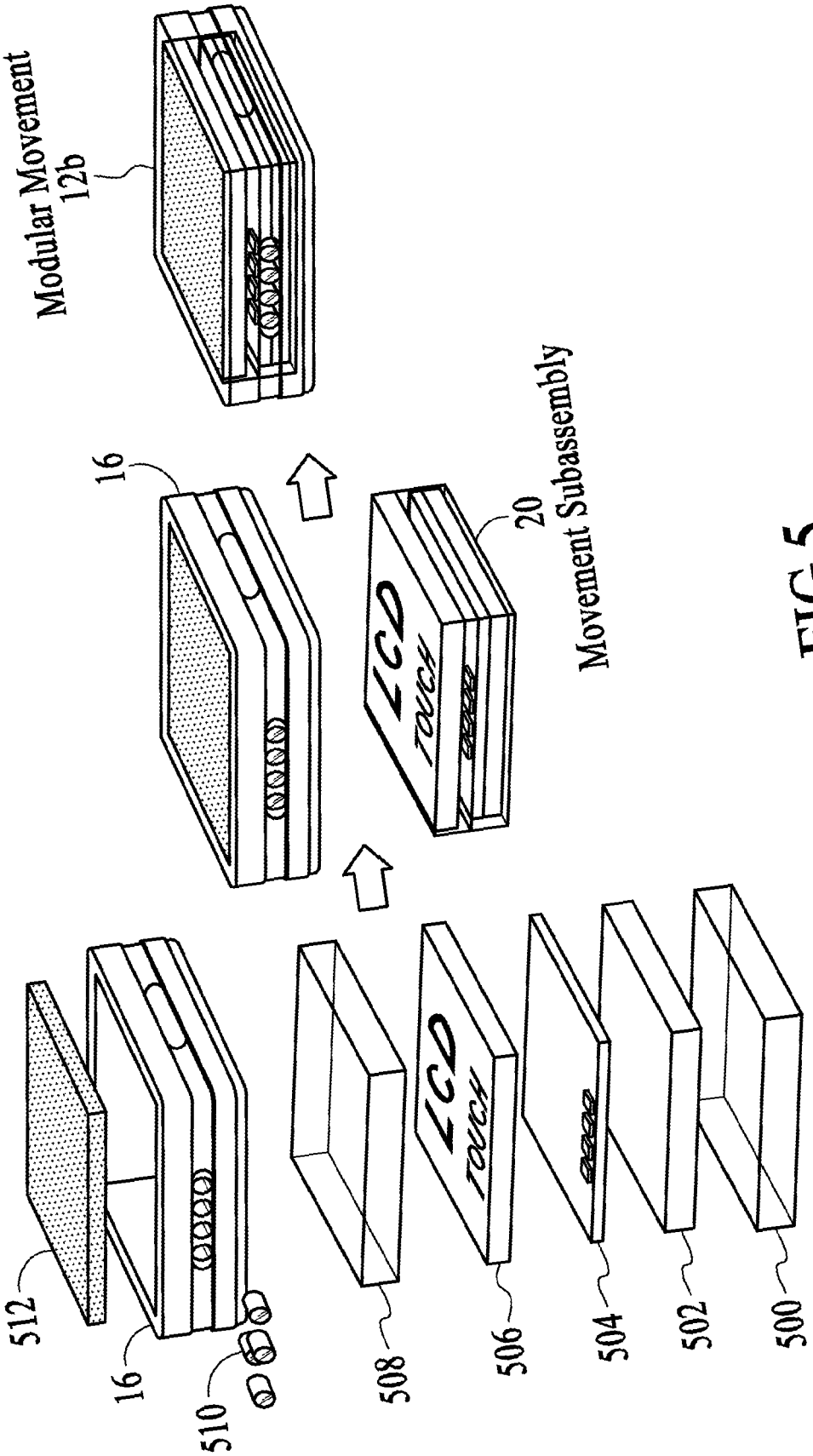
Modular Movement
12b
16
20
Movement Subassembly
LCD
TOUCH
512
16
510
508
506
504
502
500

FIG.5

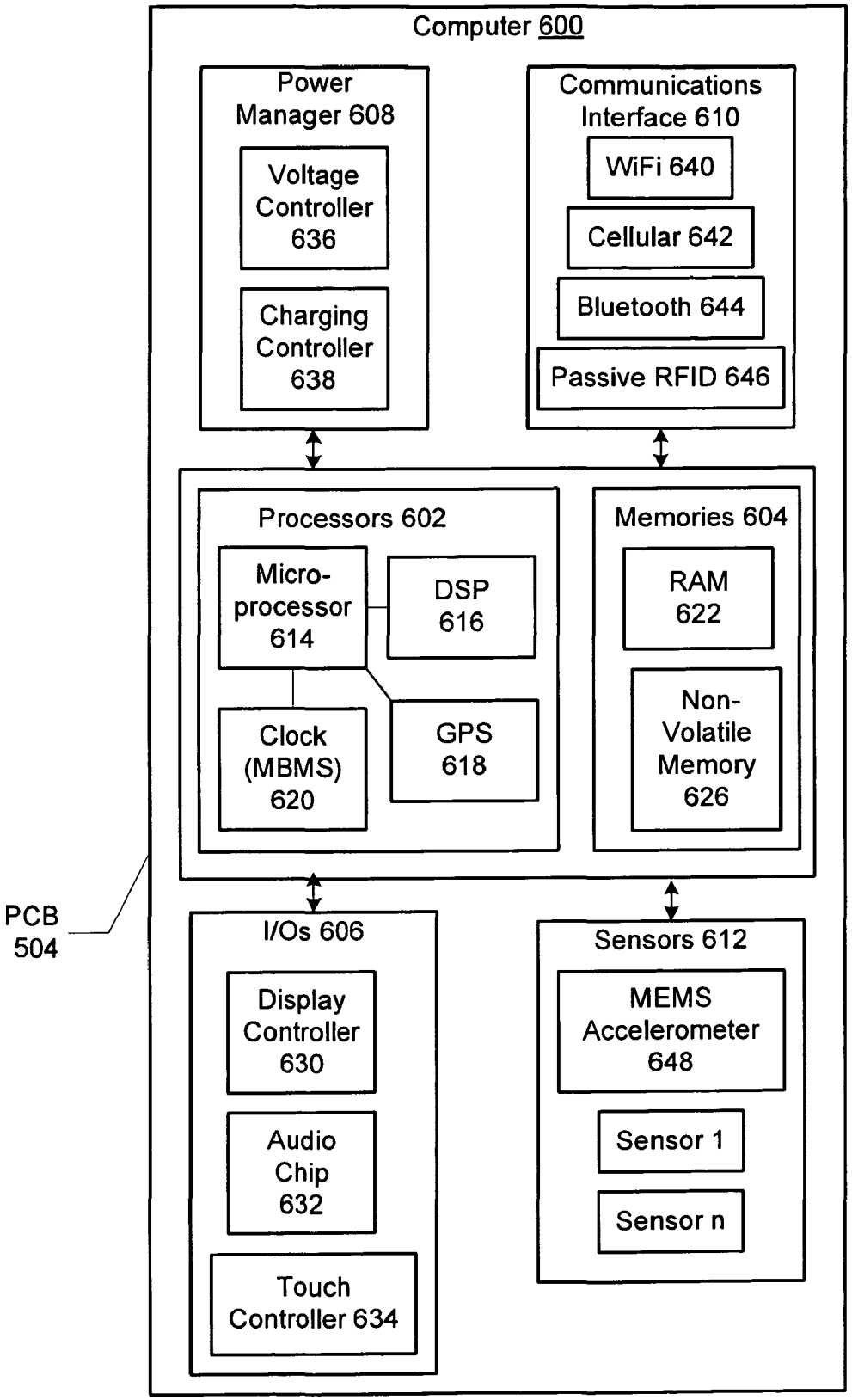
Computer 600
Power Manager 608
Voltage Controller 636
Charging Controller 638
Communications Interface 610
WiFi 640
Cellular 642
Bluetooth 644
Passive RFID 646
Processors 602
Micro-processor 614
DSP 616
Clock (MBMS) 620
GPS 618
Memories 604
RAM 622
Non-Volatile Memory 626
PCB 504
I/Os 606
Display Controller 630
Audio Chip 632
Touch Controller 634
Sensors 612
MEMS Accelerometer 648
Sensor 1
Sensor n

FIG. 6

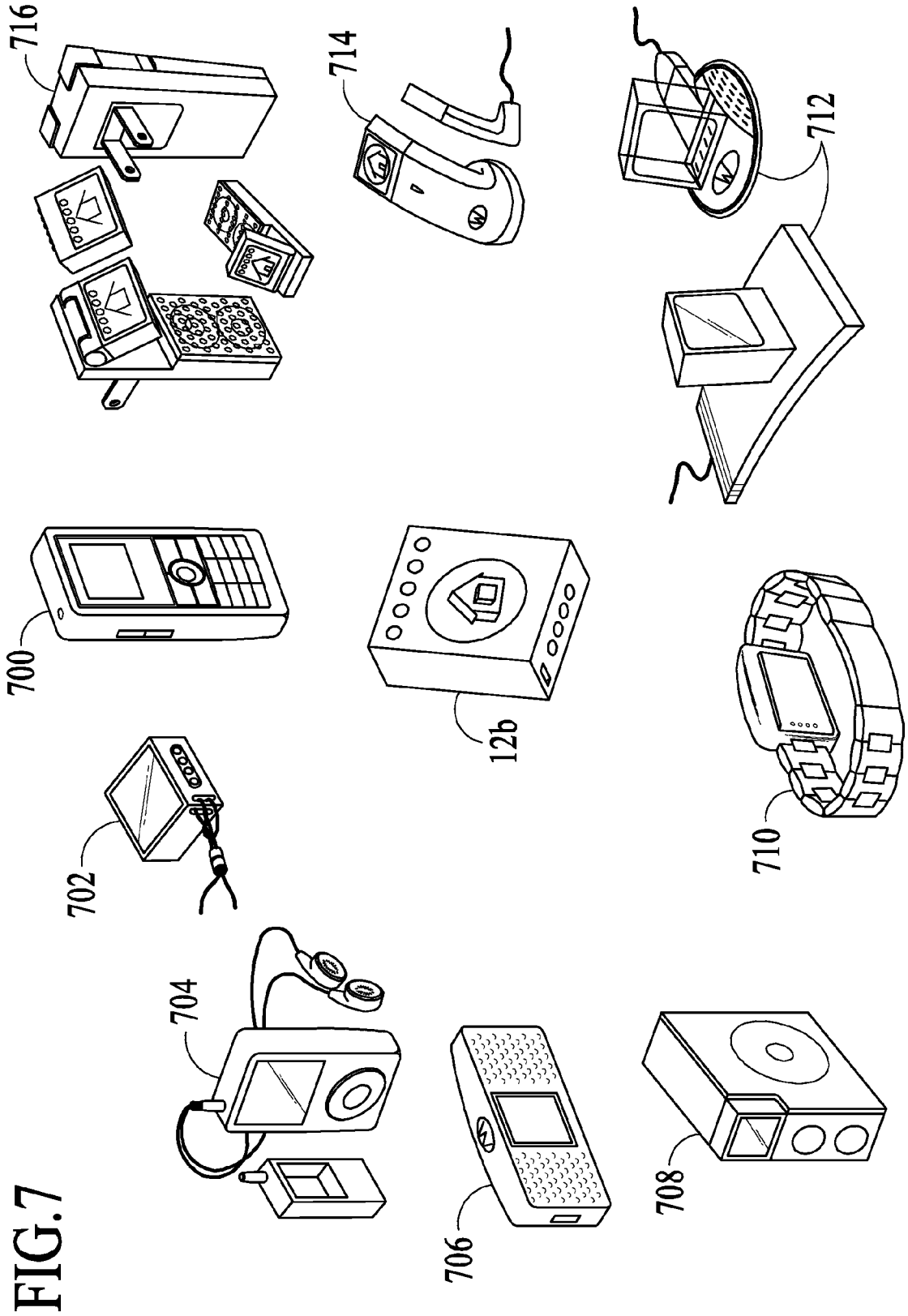

FIG.7

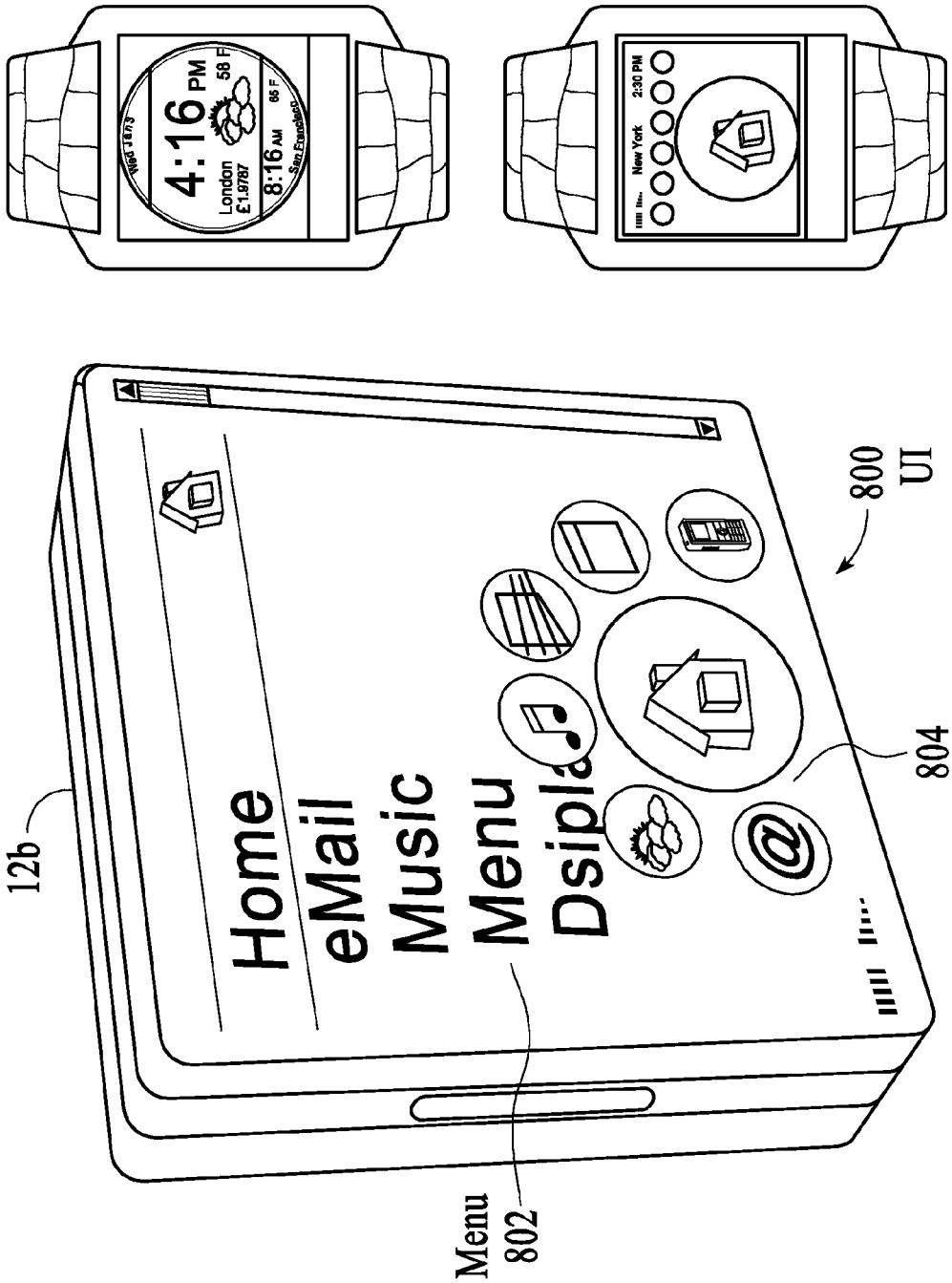
4:16 PM
58 F
London
£1.9787
8:16 AM
65 F
San Francisco
New York
2:30 PM
12b
Home
eMail
Music
Menu
Dsipla
@
800
UI
804
Icon Carousel
Menu
802

FIG.8

MODULAR MOVEMENT THAT IS FULLY FUNCTIONAL STANDALONE AND INTERCHANGEABLE IN OTHER PORTABLE DEVICES

BACKGROUND OF THE INVENTION

[0001] A typical wristwatch usually includes the following essential parts: a movement housed within a case; a piece of glass attached to an opening in the top of the case that covers the top face of the movement; and a case back enclosing the movement within an opening in the back of the case. The movement is the completed, finished inner mechanism contained inside the watch, not including the case or dial, which is responsible for measuring the passage of time (and optionally other information such as date, month and day).

[0002] Movements may be entirely mechanical, entirely electronic (potentially with no moving parts), or a blend of the two. A mechanical watch is a watch that uses a non-electric mechanism to measure the passage of time. They are driven by a spring (called a mainspring) which must be wound periodically, and releases the energy to turn the clock's wheels as it unwinds. They keep time with a balance wheel, which oscillates back and forth at a constant rate. Mechanical movements may be automatic (self-winding) or manual (manual winding mechanism).

[0003] An example type of electronic movement is a quartz movement used in quartz watches that utilizes frequency of vibrations of a quartz crystal to accurately regulate the operation of the watch. Quartz movements may be automatic (a self-winding rotor mechanism) or battery powered. The majority of watches made today are equipped with electronic movements that feature an analog time display having rotating hands on a face or dial. Some watches may have both analog and digital time readouts for simultaneous display of different information.

[0004] Other watches equipped with electronic movements may include digital displays and small computers that are used in many types of electronic devices. For example, a currently available type of electronic watch referred to as a "smart watch" is capable of wireless connectivity via FM broadcasting to provide consumers access to news, weather, sports, stocks, instant messenger, e-mail, and horoscopes on a liquid crystal display (LCD). The type of components found inside the case of a smart watch may include a speaker, a printed circuit board (PCB), a processor, a memory, a radio receiver chip, a rechargeable battery, and an inductive charging coil. The watch may be recharged by placing the watch in a watch stand, and plugging the watch stand into the wall. When a coil attached to the contact surface on the back of the watch comes in contact with a charging plate on the watch stand, the smart watch battery is charged through induction.

[0005] Although there may be some differences between the processes used to manufacture a mechanical movement and an electronic computer-based movement, both types of movements are assembled as a collection of parts in what can be characterized as a vertical watchmaking manufacturing process.

[0006] Consider by way of example, the process used to manufacture a mechanical watch movement. A mechanical watch movement begins with a raw movement or ébauche, which refers to an incomplete watch movement that is sold as a set of loose parts, comprising a main plate, bridges, a train, a winding and setting mechanism and a regulator. The timing system, the escapement, mainspring, dial, and hands, however, are not usually parts of the "ébauche".

[0007] Very few watch manufacturers are capable of producing the parts necessary for ébauches, movements, and the cases to support the production and assembly of finished watches. Instead, most watch companies purchase complete movements from a supplier, such as ETA, fit the movements with dials and hands, and then encase the movements within in-house or contractor-supplied cases. Some watch companies may purchase ébauches from a supplier, finish (polish and decorate) the parts, optionally modify parts of the movement and/or add custom components, and assemble the parts to create a higher-quality or custom movement.

[0008] The final steps of the process is case fitting in which the movement is fitted inside the case, which may require further assembly, and finally, case closure. During case fitting, the watch movement is fitted into the case tightly so that it does not move, and in some cases, may be physically attached to the case with screws. After fitting, the case is enclosed with a case back for proper dust and water resistance. Typically, watch companies take great care in how the case back is affixed to the case because this assembly point can be critical for the water tightness of a watch. For example, one method for achieving water resistance is to use gaskets between the case and case back to form a seal, used in conjunction with a sealant applied on the case to help keep water out. Some case backs may be screwed in, or onto, the case.

[0009] The vertical watchmaking manufacturing market for electronic movements is similar in that very few companies make all the parts necessary to build a completed electronic watch. Instead, the companies typically purchase electronic movements from suppliers and assemble electronic movements into the cases to complete the watch similar to the above.

BRIEF SUMMARY OF THE INVENTION

[0010] One aspect of the exemplary embodiment provides a portable device comprising a modular movement. The modular movement has a body housing a plurality of layers that include a top layer of glass, and a movement subassembly for displaying information, including time. The modular movement includes all parts necessary for power and operation, including the displaying of the information, such that the modular movement is fully functional standalone. The portable device further includes a case, which includes a receptacle for removably receiving the modular movement without need for a tool, such that the modular movement is user-interchangeable with another case of another portable device.

[0011] Another embodiment includes a method for manufacturing an interchangeable movement. Aspects of the exemplary embodiment include assembling parts into a movement subassembly, such that the subassembly is a complete working mechanism; enclosing the subassembly in a body; and integrating a glass with the body, thereby creating a modular movement. The case of a portable device is also required to have a receptacle for removably receiving the modular movement without tools and in a manner where the glass of the modular movement is visible through the case when the modular movement is inserted.

[0012] A further exemplary embodiment discloses a modular movement. A modular movement comprises a movement subassembly that includes a touchscreen; a printed circuit board including a memory and a processor for executing software that displays a user interface on the touchscreen and

operates the modular movement, and a battery, wherein the subassembly is a complete working mechanism; and a body for housing the movement subassembly such that the touchscreen is integrated with the body, and wherein the modular movement is removably insertable into a case of a portable device without tools and in a manner whereby the touchscreen of the modular movement is visible through the case.

[0013] Yet a further exemplary embodiment discloses a portable device comprising a modular movement and a case. The modular movement comprises a body housing a plurality of layers, including a touchscreen; a printed circuit board including a memory and a processor for executing software that displays a user interface on the touchscreen and operates the modular movement, and a battery. The case includes a receptacle for removably receiving the modular movement without need for a tool, such that the modular movement is interchangeable with at least a second portable device. The user interface of the modular movement is controlled by a user interacting with the touchscreen through touch, such that a button or a dial for controlling the user interface are completely absent from both the modular movement and the case.

BRIEF DESCRIPTION OF SEVERAL VIEWS OF THE DRAWINGS

[0014] FIGS. **1**A-**1**C are block diagrams illustrating exemplary embodiments of a portable device having a modular movement.

[0015] FIG. **2** is a flow chart of a process for manufacturing an interchangeable modular movement.

[0016] FIG. **3** is another diagram illustrating the exemplary embodiment of the receptacle formed in the rear of the case.

[0017] FIGS. **4**A and **4**B are diagrams illustrating the modular movement inserted into the receptacle of the case.

[0018] FIG. **5** is a diagram of an exploded view of the modular movement and components thereof when implemented as a computer-based electronic modular movement according to one exemplary embodiment.

[0019] FIG. **6** is a block diagram illustrating computer components on the PCB comprising the modular movement according to an exemplary embodiment.

[0020] FIG. **7** is a diagram illustrating exemplary types of portable device form factors that could be used with modular movement and receptacle.

[0021] FIG. **8** is a diagram illustrating several views of an exemplary user interface that may be displayed on the modular movement.

DETAILED DESCRIPTION OF THE INVENTION

[0022] The present invention relates to a modular movement that is both fully functional standalone as well as interchangeable in other portable devices, such as watches. The following description is presented to enable one of ordinary skill in the art to make and use the invention and is provided in the context of a patent application and its requirements. Various modifications to the preferred embodiments and the generic principles and features described herein will be readily apparent to those skilled in the art. Thus, the present invention is not intended to be limited to the embodiments shown, but is to be accorded the widest scope consistent with the principles and features described herein.

[0023] Whether a watch utilizes a mechanical or electronic movement, most conventional watches have been designed so that consumers can change the straps or bands of a watch and even interchange the straps between different watches—either for aesthetic or functional reasons. For example, a consumer may wish to change between a casual and a formal strap, change between different color straps, and/or change between a non-waterproof and a waterproof strap, for instance.

[0024] One aspect of the present invention is the recognition that due to the history of watchmaking and the resulting vertical watchmaking manufacturing process, conventional watches have not been designed so that consumers can readily change the movement of a watch. That is, due to current construction techniques, the manner in which movements are affixed within the case and/or the manner in which the case back is attached to the case, tools and some amount of skill would be required to remove a movement. In most instances, some disassembly of the movement may be even necessary to remove the movement from the case, thereby ensuring that the movement will no be longer fully functional after removal without repair and reassembly.

[0025] Furthermore, even assuming the consumer succeeded at removing a movement from a case, the manner in which watches and movements are constructed today would cause further problems for the consumer. For example, if a consumer removed a mechanical movement from a completed watch, the fully functional movement would include hands and dials. However, once the movement is removed from the case and the attached glass, the hands and dials of the movement would be unprotected and could easily be damaged by handling. In this regard, since with convention watches it is the watch that is water resistant or waterproof, removing the movement from the watch may expose the movement to moisture, for which the movement would have little if no protection.

[0026] The exemplary embodiment of the present invention provides an improved movement and method of manufacturing thereof that enables consumers to change the movement of a portable device, such as a watch. No tools or disassembly/assembly of either the portable device or the movement are necessary; and the movement itself is modular and durable in construction such that the movement is fully-functional standalone and therefore retains its functionality after removal from the portable device. The modular movement is also easily user-interchangeable with other portable devices.

[0027] FIGS. **1**A-**1**C are block diagrams illustrating exemplary embodiments of a portable device **10** having a modular movement where like components have like numerals have like reference numerals. According to the exemplary embodiments, modular movements **12***a*, **12***b* and **12***c* (hereinafter modular movement **12** when refereed to collectively) are provided that can be removably inserted within a case **14** of the portable device **10**. In the exemplary embodiments shown, the portable device **10** comprises a watch although the bands are not shown, but the portable device **10** may represent other types of devices, as described below.

[0028] According to the exemplary embodiments, the modular movement **12** includes a body **16** that houses a plurality of layers, including an integrated top layer of glass **18**, and a movement subassembly **20**, for displaying information, including time. FIG. **1**B is a diagram of modular movement **12***b* showing a semitransparent body **16** for convenience so that subassembly **20** can be seen through case **16**.

[0029] As used herein, the term "modular" means that the body **16** of the modular movement **12** includes all parts necessary for operation and power of the modular movement **12**.

Thus, the modular movement **12** of the exemplary embodiment is fully functional in a standalone state. However, according to the exemplary embodiment, the case **14** of the portable device **10** includes a receptacle **22** for removably receiving the modular movement **12** without need for a tool, such that the modular movement **12** can be either used with the case **14** of the portable device **10** and/or is user interchangeable with the cases of other portable devices having the same or similar types of receptacles.

[0030] When the modular movement **12** is used in a portable device **10**, such as a watch, the glass **18** of the module of movement **12** becomes the glass **18** of the portable device. The glass **18** may include any type of transparent or semi-transparent material layer on a top surface of the modular movement **12**, including sapphire, crystal, plexiglass, and the like.

[0031] In one embodiment, the body **16** may be constructed to provide the modular movement **12** with a degree of water resistance and dust protection. For example, the body **16** may be a single shell except for an opening for the glass **18** and once the glass **18** is in place, the glass **18** may by sealed with the body **16** using traditional waterproofing methods. In another embodiment, the body **16** may be assembled in separate pieces but then sealed once assembled.

[0032] Providing a modular movement **12** having an enclosed and self-contained body **16** including the glass **18** is in contrast to traditional watchmaking methods in which 1) the parts of the movement are not integrated into a body, and 2) the watch glass is typically affixed to the watchcase, rather than to the watch movement.

[0033] In one exemplary embodiment, the modular movement **12** and the receptacle **22** in the case **14** are made industry standard sizes, such that different modular movements **12** manufactured and sold by a one set of manufacturers fit within the receptacles of different cases manufactured and sold by another set of manufacturers, for example.

[0034] FIG. **1**A shows an embodiment where the receptacle **22** is formed as an opening on the top or front of the case **14** and the modular movement **12***a* is inserted into the front of the case **14** through the open receptacle **22**. In one embodiment, the receptacle **22** may only extend partially through the depth of the case body, leaving one side, i.e., the back, of the case **14** closed.

[0035] FIG. **1**B shows another embodiment where the receptacle **22** is formed as an opening in the back of the case **14** and where the top or front of the case **14** includes an opening. In this embodiment, the modular movement **12***b* is inserted into the case **14** from the bottom or back of the case **14**, and once inserted the glass **18** of the modular movement **12***b* is visible through the opening in the top of the case **14**.

[0036] Although FIGS. **1**A and **1**B show that once the modular movement **12***b* is inserted into the receptacle **22**, no closure is necessary to seal the case **14** unlike with traditional watches. FIG. **1**C is a diagram illustrating that in an alternative embodiment, a receptacle door **24** may be used to close the case **14** once modular movement **12***c* is inserted into the receptacle **22**. In another embodiment, the receptacle door **24** may be attached to the case **14** via a hinge.

[0037] As used herein, the portable device **10** may include a combination of both the case **14** and the modular movement **12**. But the term case **14** may denote the body of the portable device **10** into which the receptacle **22** is formed and into which the modular movement **12** is to be inserted. Thus, for small portable devices **10**, such as a watch, the proportionate size of the portable device/case to the receptacle **22** is small (FIGS. **1**A and **1**B). But for larger portable devices, the size of the portable device/case to the receptacle **22** may be larger (e.g., FIG. **1**C).

[0038] According to an exemplary embodiment, the modular movement **12** may be a mechanical movement or an electronic movement. FIG. **1**A may illustrate an embodiment where the modular movement **12***a* is implemented as a mechanical movement. In this exemplary embodiment, the subassembly **20** within the body **16** of modular movement **12***a* would include a mechanical movement comprising not only components of a traditional raw movement such as a main plate, bridges, a train, a winding and setting mechanism and a regulator; but also a timing system, an escapement, a mainspring, and a time display such as dial and hands. The time display may be covered by the glass **18**. The mechanical movement of the subassembly may be automatic or manual. The winding and setting mechanism may include a component, such as a push-in crown, built into the case **14** that when pushed-in, would engaged with a recess in the side of the modular movement to interact with the winding and setting mechanism.

[0039] FIGS. **1**B and **1**C illustrate example embodiments where the modular movements **12***b* and **12***c* are implemented as an electronic movement. Examples of an electronic movement may include a quartz movement with an analog or digital display, and with or without a battery. Another example of an electronic movement may include a computer-based movement with a touchscreen or LCD display and battery, for instance.

[0040] FIG. **2** is a flow chart illustrating a process for manufacturing an interchangeable modular movement **12**. The process may begin by assembling parts into the movement subassembly **20**, such that the movement subassembly **20** is a complete working mechanism (block **200**). The movement subassembly **20** is then enclosed in the body **16** (block **202**); and the glass **18** is integrated with the body **16**, thereby creating the modular movement **12** (block **204**). In one exemplary embodiment, the modular movement **12** may be provided with a standard size and shape so that different modular movements from different manufacturers have the same size. For example, in one embodiment, the standard size and shape of the modular movement **12** may be approximately 30 mm wide, 34 mm tall, and 8 mm in depth, for example. In another embodiment, the modular movement **12** may have a size and shape of approximately 32×32×10 mm, for example. Thus, any sizes ranging approximately around these dimensions should be suitable for the modular movement **12**.

[0041] Another step to the process is requiring the cases **14** of portable devices **10** to each have a receptacle **22** for removably receiving the modular movement **12** without tools and in a manner where the glass of the modular movement **12** is open or at least visible through the case **14** when the modular movement **12** is inserted (block **206**).

[0042] The receptacle **22** should be designed so that no tools are required for modular movement **12** insertion or ejection so that the modular movement **12** is easily user interchangeable. According to the exemplary embodiment, several different latching mechanisms may be used to retain the modular movement **12** inside the receptacle **22**. For example, the receptacle **22** may be provided with internal latching mechanisms such as snaps, clamps or springs, for example. In another embodiment, a mechanism may be used that pressurizes the modular movement **12** into the receptacle

22 from the outside of the case **14**. In yet another embodiment, contacts **510** on the modular movement **12** may be provided with springs that hold the modular movement **12** in place when inserted.

[0043] In yet another embodiment, at least one wall of the receptacle **22** may be provided with one or more magnets that have sufficient attraction force to hold modular movement **12** in place when inserted. A spring loaded decoupling mechanism could be used to then eject the modular movement **12**.

[0044] Also, in a watch or other wearable portable device **10** embodiments where the back of the case **14** is open, any of the latching mechanisms may be calibrated to account for when the case **14** is worn and the modular movement **12** is inside the receptacle **22**, the modular movement **12** may be held inside the receptacle **22** at least in part by the wearer's body (e.g., by a wrist).

[0045] Requiring no tools for insertion or ejection of the modular movement **12** may be a function of both the design of the receptacle **22** and the case **14**. The design of the receptacle **22** and case **14** also affect how the inserted modular movement **12** will be visible through the case **14**.

[0046] FIG. **3** is a diagram illustrating a rear view of the case **14** and the receptacle **22** according to one exemplary embodiment. The receptacle **22** may be formed in the case **14** by a set of sidewalls **300** whose number, shape, size, and depth should be substantially similar to those of the side walls of the modular movement **12**. In addition, the case **14** may be provided with a faceplate **302** that may function to aid in retaining the modular movement **12** inside the case **14** as well as defines which portions of the modular movement **12** are visible through the case.

[0047] FIGS. **4**A and **4**B are diagrams illustrating the modular movement inserted into the receptacle of the case. In one embodiment, the depth or thicknesses of the modular movement **12** and the case **14** may be designed to be substantially similar, so that when the modular movement **12** is inserted, the side of the modular movement **12** facing the open end of the receptacle **22** is coplanar with the back of the case **14** (and the wearer's arm), as shown in FIG. **4**A. As shown in FIG. **4**B, the glass **18** of the modular movement **12** that is open through the faceplate **302** of the case **14** may be designed to be approximately coplanar with (or slightly above or below) the top of the case **14**.

[0048] In some embodiments, the modular movement **12** may have its front and back sides open in the front and rear of the case **14**. However, some measure of protection may be provided by configuring the receptacle **22** so that the four sidewalls **300** of the receptacle **22** fully cover the four remaining sides of the modular movement **12**, as shown. Also, although openings for the modular movement **12** are shown in the front and rear of the case **14** via the faceplate **302** and receptacle **22**, in another embodiment, the receptacle **22** may also be formed on a side, bottom or top of the case as well, particularly for other types of portable devices **10** and form factors.

[0049] In a further embodiment, the faceplate **302** may be provided in any shape desired, such as square, round, oval, triangular or rectangular, for instance, and the shape of faceplate **302** may be different than the shape of the modular movement **12**. Thus, in the case of a watch, although a square or rectangular modular movement **12** is inserted into a square or rectangular receptacle **22** in the case **14**, the modular movement **12** may be given the appearance of a round face by providing the case **14** with a round faceplate **302**. Similarly, in the case of a round modular movement **12**, the case may be given a square or rectangular faceplate **302** if desired. Accordingly, the case **14** design has no restrictions on what faceplate/movement shape combinations that can be used. Any shaped faceplate **302** may be applied to the case **14** for use with any shaped modular movement **12** and correspondingly shaped receptacle **22**.

[0050] According to another aspect of the exemplary embodiment, the modular movement **12** is implemented as a computer-base electronic movement that is used to power the portable devices into which it is inserted, as described below.

[0051] FIG. **5** is a diagram of an exploded view of the modular movement and components thereof when implemented as a computer-based electronic modular movement according to one exemplary embodiment. As shown, the modular movement **12** includes body **16** that houses multiple layers of components, which in this exemplary embodiment, may include a plastic internal chassis **500**, a rechargeable-type battery **502**, a printed circuit board (PCB) **504**, a touchscreen **506**, and an optional second plastic internal chassis **508** and protective covering **512**. In this embodiment, the modular movement **12** has six sides, but the side with the touchscreen is substantially all display space.

[0052] The PCB **504** may include components (described below) such as a memory and processor for executing software that displays a user interface on the touchscreen **506** and that operates the modular movement **12***b;* and an optional communications interface for receiving data remotely, which may be displayed and updated on the touchscreen **506**.

[0053] Other components of the modular movement **12***b* may include an antenna (not shown) that wraps around the body **16** (alternatively embedded in case **14**), and a set of contacts **510** inserted into the body **16** and in contact with the PCB. The contacts may be used for recharging the battery (the contacts are both power and ground) and/or for serialized communications. The contacts can also be used for orientation purposes for the user to tell which side of the modular movement **12***b* is up or down when inserting the modular movement **12***b* into the receptacle **22** of the case **14**. In one embodiment, the contacts **510** are located on a a side of the modular movement **12***a* that is in the receptacle **22** opening so that the portable device **10** as a whole can be placed in a dock and the contacts **510** used to abut the contacts of the dock. In another embodiment, the contacts **510** are located on a side of the modular movement **12***b* that face inward into the receptacle **22** for abutting with contacts in the receptacle **22**. In yet another embodiment, the contacts **510** may be located on the modular movement **12***b* such that the contacts **510** wrap around at least two side of the modular movement **12***b* to be used in both manners.

[0054] During assembly, the contacts **510** are inserted into the body **16**; and the layers of components are assembled as shown into a movement subassembly **20**. The movement subassembly **20** is then inserted into the body **16** and the body is sealed, creating the computer-based modular movement **12***b*.

[0055] FIG. **6** is a block diagram illustrating computer components on the PCB comprising the modular movement **12***b* according to an exemplary embodiment. In one embodiment, the PCB **504** containing computer **600** may be implemented as a single sided or double-sided PCB. In another embodiment, the PCB **504** may be implemented as separate PCBs and stacked within the movement subassembly **514**.

[0056] Computer **600** may include components such as processors **602**, memories **604**, inputs/outputs **606**, power manager **608**, a communications interface **610**, and sensors **612**. In one embodiment, one or more of the components of the computer **600** may be implemented on a single chip.

[0057] The processors **602** may include at least one microprocessor **614**, a digital signal processor (DSP), a global positioning chip (GPS) **616**, and a clock **620**. Microprocessor **614** and/or DSP may be capable of concurrently executing multiple software routines, including system code, to control the various processes of the modular movement **12***b*. In one embodiment, microprocessor **614** may comprise an Advanced RISC Machine (ARM) processor or the like may be used, for example. GPS **618** may process received signals and with or without microprocessor **614** determine position information such as location, speed, direction, and time.

[0058] Clock **620** may be used as an internal timing device for the computer **600**. Clock **620**, which may also be referred to as a real-time clock or system clock, inputs to the microprocessor **614** a constant flow of timing pulses for operation of the microprocessor **614**. Clock **620** may also keep track of the time of day and makes this data available to the software routines executing in microprocessor **614**. In one embodiment, clock **620** comprises a silicon clock oscillator implemented using micro-electro-mechanical systems (MEMS) technology. In another embodiment, clock **620** may utilize a quartz crystal oscillator.

[0059] Memories **604** may include a random access memory (RAM) **622** and a nonvolatile memory **626**. RAM **622** may be used as the main memory for microprocessor **614** for supporting execution of the software routines and other selective storage functions. Non-volatile memory **626** is capable of holding instructions and data without power and may store the software routines for controlling modular movement **12***b* in the form of computer-readable program instructions. In one embodiment, non-volatile memory **626** comprises flash memory. In alternative embodiments, non-volatile memory **626** may comprise any type of read only memory (ROM).

[0060] I/Os **606** may include a display controller **630**, an audio chip **632**, and a touchscreen controller **634**. Display controller **630** may access RAM **622** and transfer processed data, such as time and date and/or a user interface, to the touchscreen **506** for display. The audio chip **632** is coupled to an optional speaker (not shown) and interfaces with microprocessor **614** to provide audio capability for the modular movement **12***b*. In another embodiment, the audio chip **632** may be coupled to both a speaker and a microphone (not shown). In this embodiment, a water resistant/proof speaker and microphone may be used to retain water resistance of the modular movement **12***b*. In an alternative embodiment, the modular movement **12***b* may be implemented without sound capability, in which case no audio chip **632**, speaker or microphone is necessary.

[0061] In the embodiment where the audio chip **632** is coupled to both a speaker and microphone, the microphone may record voice input that is first processed by the audio chip and then input to the microprocessor **614** for further processing. The audio chip **632** may include hardware and/or software that converts analog voice into pulse code modulation (PCM) or Adaptive Differential PCM (ADPCM) digital code and vice versa, as well as for compressing and decompressing the PCM or ADPCM digital audio signal. In one embodiment, the processed voice input may be stored for subsequent playback. In another embodiment, the processed voice input may be transferred to communications interface **610** for wireless transmission.

[0062] Touch controller **634** may interface with the touchscreen **506** to detect touches and touch locations and pass the information on to microprocessor **614** for determination of user interactions. Another example I/O **606** may include a USB controller (not shown).

[0063] Power manager **608** communicates with the microprocessor **614** and coordinates power management for the computer **600** while the computer is drawing power from the battery **502** during normal operations. In one embodiment, the battery **502** may comprise a rechargeable, lithium ion battery or the like may be used, for example. The power manager **608** includes a voltage controller **636** and a charging controller **638** for recharging the battery **502**. Voltage controller **636** may regulate battery voltage to the rest of the computer **600**, and charging controller **638** may manage appropriate voltage levels to properly charge the battery **502**. Power manager **608** may further include a microcontroller (not shown) in one embodiment.

[0064] The communications interface **610** may include components for supporting one-way or two-way wireless communications. In one embodiment, the communications interface **610** is for primarily receiving data remotely, including streaming data, which is displayed and updated on the touchscreen **506**. However, in an alternative embodiment, besides transmitting data, the communication interface **616** could also support voice transmission. In an exemplary embodiment, the communications interface **610** supports low and intermediate power radio frequency (RF) communications. The communications interface **610** may include one or more of a WiFi transceiver **640** for supporting communication with a WiFi network, including wireless local area networks (WLAN), and WiMAX; a cellular transceiver **642** for supporting communication with a cellular network; Bluetooth transceiver **644** for low-power communication according to the Bluetooth protocol and the like, such as wireless personal area networks (WPANs); and passive radio-frequency identification (RFID) **646**. Others wireless options may include baseband and infrared, for example. The communications interface **610** may also include other types of communications devices (not shown) besides wireless, such as serial communications via contacts **510** and/or USB communications, for example.

[0065] Sensors **612** may include a variety of sensors including a MEMS accelerometer **648**, and any number of optional sensors **1**-*n*. MEMS accelerometer **648** may be used to measure information such as position, motion, tilt, shock, and vibration for use by microprocessor **614**. The computer **600** may additionally include any number of optional sensors **1**-*n*, including environmental sensors (e.g., ambient light, temperature, humidity, pressure, altitude, etc), biological sensors (e.g., pulse, body temperature, blood pressure, body fat, etc.), and a proximity detector for detecting the proximity of objects. In one embodiment, the proximity detector may be implemented as an infrared data Association (IRDA) proximity detector. The computer **600** may display the information measured from the sensors **612**, analyze the information by microprocessor **614** and display the analyzed information, and/or transmit the raw or analyzed information via the communications interface **610**. In one embodiment, not all of the sensors **612** may be located on PCB **504**.

[0066] In a further aspect of the exemplary embodiment, the modular movement **12***b* may include more than one battery **502** and/or the portable device **10** may include one or more external batteries (not shown). In this embodiment, the modular movement **12***b* may be configured via the software routines and power manager **614** to selectively determine whether to draw power from the battery or batteries **502**, the external battery or batteries, or a combination thereof depending on a variety of factors such as current operating conditions and the percentage of battery power remaining in each of the batteries. In the case of a watch, for example, a band and case assembly may include a left strap and a right strap, and may further include a left battery in the left strap and a right battery in the right strap. In this embodiment, the modular movement **12***b* may be configured to selectively determine whether to use battery **502**, the left battery, and/or the right battery, or some combination of the three.

[0067] In a further aspect of the exemplary embodiment, the receptacle **22** of the standard size that is designed to receive the modular movement **12***b* may be built into the case of any type of portable device **10**.

[0068] FIG. **7** is a diagram illustrating exemplary types of portable device form factors that could be used with modular movement **12***b* and receptacle **22**. As shown exemplary types of portable devices that may include standard receptacles **22** for use with modular movement **12***b* may include a cell phone handset **700**, a carrier and strap **702**, a media player **704**, portable speakers **706**, battery dock recharger and speaker **708**, a watch **710**, a media handset and cradle **712**, a telephone handset **714**, and a portable charging cradle **716** for the modular movement **12***b*. Through the use of charging cradle **716**, the modular movement **12***b* can be recharged, even while outside of the portable device **10**. Thus, the exemplary embodiment provides a module movement **12***b* that can be used, operated and recharged whether both alone and when inserted into the portable device **10**. Other example portable devices include a bike handlebar cradle, a modem housing (e.g., for notebook computers), an adapter to convert to a USB dongle, jewelry, a lanyard, clothing, a keychain and a necklace, for instance.

[0069] Thus, according to the exemplary embodiment, the modular movements **12***b* made by the same or different manufacturers may be interchangeable by users into various portable devices **10** made by different manufacturers due to the standard form factor designs of the modular movements and receptacles **22**. Once inserted into the portable device **10**, the modular movement **12***b* operates and optionally powers the portable device **10**. If the modular movement is equipped with the user's personal information and wireless connectivity, the user may carry the modular movement **12***b* around wherever the user goes and may plug the modular movement **12***b* into whatever compliant portable devices **10** are available.

[0070] For example, consider the scenario in which a user wakes up in the morning, and while shaving plugs the modular movement **12***b* into a receptacle **22** next to the mirror. Thereafter, the modular movement **12***b* streams stocks, weather and the like for the user via an Internet connection made using the RF communications interface **610**. When it is time to leave for work, the user removes the modular movement **12***b* from the receptacle **22** and inserts the modular movement **12***b* into his or her watch **710** or cell phone handset **700**, and takes the modular movement **12***b* along. In addition, if the modular movement **12***b* is equipped with RFID, the modular movement **12***b* may be used for automatic payment of goods and services. The user may use the modular movement **12***b* to carry or access his or her personal information, such as email, contacts, voicemail, etc., stream real-time data and media, and may even use the modular movement **12***b* in the place of cash and credit cards.

[0071] FIG. **8** is a diagram illustrating several views of an exemplary user interface that may be displayed on the modular movement **12***b*. In one embodiment, the user interface **800** displayed on the touchscreen **506** of the modular movement **12***b* may include menu items **802** and/or an icon carousel **804**. The icon carousel **804** is a scrollable display of icons that are laid out along an arc of the wheel across the touchscreen **506**, where only a subset of the icons (e.g., five, 2 on each side of a center position) are visible on the touchscreen **506** at a time. The user may rotate/scroll the icons around the icon carousel **804** to the left or right with a swipe of the finger in the corresponding direction along the icon carousel **804**. When the rotating icon carousel **804** stops rotating, the icon in the center position is the currently active icon that can be selected or activated. The user may select one of the menu items **802** or the currently active icon with a finger touch or double touch. In one embodiment, as the icons scroll around the icon carousel **804**, whichever icon is displayed in the center position may automatically enlarge for ease of viewing. Other embodiments are also shown in FIG. **8**, such as the user interface **800** displayed on a watch with a round faceplate **302**, and the icon carousel **804** displayed with an analog clock display.

[0072] It should be noted that the user interface **800** has no buttons on the modular movement **12***b*. Instead, the user interface **800** of the modular movement **12***b* is controlled entirely by the user interacting with the touchscreen **506** through touch, such that a button or a dial for controlling the user interface are completely absent from both the modular movement and the case **14**, thereby simplifying user interface **800** and saving manufacturing costs. In one embodiment, a button may be provided on the side of the modular movement **12***b*, for resetting, but not for controlling user interface **800**. In an alternative embodiment, the modular movement **12***b* may be automatically reset when first plugged-in to be recharged, or the recharging cradle may be provided with a reset button.

[0073] In the embodiment where the touchscreen **506** of the modular movement **12** is open through the faceplate **302** of the case **14** and is slightly below the top of the case (e.g, FIG. 4B), the UI may be designed such that the edges of the case **14** surrounding the touchscreen **506** are used as guides to the user's fingers as the user makes finger gestures across the touchscreen **506**.

[0074] In a further embodiment, the user interface may be provided with auto configuration settings. In one auto configuration embodiment, once the modular movement **12***b* is inserted into the receptacle **22** of the case **14**, the modular movement **12***b* may be configured via contacts **510** or wirelessly to automatically determine characteristics of the case **14**, such as the make, model, and shape of the faceplate **302** and/or receptacle **22** opening. Using the characteristics of the case **14**, the modular movement **12***b* may automatically configure its user interface **800** accordingly. For example, if the modular movement **12***b* detects that it is inserted into a case (e.g., via a corresponding set of contacts in the receptacle) having a rectangular or square faceplate **302** that does not overlap the glass **18** of the touchscreen **506** in any way, then no changes to the user interface **800** need to be made. If,

however, the modular movement **12***b* detects that it is inserted into a case having a round or oval faceplate **302** that overlaps the corner of the touchscreen **506**, and therefore eliminates areas of the screen space, i.e., the corners, then the modular movement **12***b* may automatically reconfigure the user interface **800** to display information only in the available areas of the touchscreen **506**.

[0075] In another auto configuration embodiment, the orientation of user interface may automatically change in response to the modular movement **12***b* detecting a change in the orientation of the modular movement **12***b*.

[0076] A modular movement that is both fully functional standalone and interchangeable in other portable devices, such as watches, has been disclosed. The present invention has been described in accordance with the embodiments shown, and one of ordinary skill in the art will readily recognize that there could be variations to the embodiments, and any variations would be within the spirit and scope of the present invention. For example, the portable device may be provided without communication capability and used to store a user's personal information, such as medical records for, instance.

[0077] In addition, the embodiments can be implemented using hardware, software, a computer readable medium containing program instructions, or a combination thereof. Software written according to the present invention is to be either stored in some form of computer-readable medium such as memory or is to be transmitted over a network, and is to be executed by a processor. Consequently, a computer-readable medium is intended to include a computer readable signal, which may be, for example, transmitted over a network. Accordingly, many modifications may be made by one of ordinary skill in the art without departing from the spirit and scope of the appended claims.

We claim:

1. A portable device comprising:

a modular movement having body housing a plurality of layers, including:

a top layer of glass,

a movement subassembly for displaying information, including time,

wherein the modular movement includes all parts necessary for power and operation, including the displaying of the information, such that the modular movement is fully functional standalone; and

a case, the case including a receptacle for removably receiving the modular movement without need for a tool, such that the modular movement is user-interchangeable with another case of another portable device.

2. The portable device of claim **1** wherein the modular movement and the receptacle in the case are standard sizes, such that a plurality of different modular movements manufactured and sold by one set of manufacturers fit within receptacles of a plurality of different cases manufactured and sold by another set of manufacturers.

3. The portable device of claim **1** wherein the modular movement is water resistant.

4. The portable device of claim **1** wherein the receptacle is formed in the case with a set of sidewalls whose number, shape, size, and depth are substantially similar to those of the modular movement.

5. The portable device of claim **4** wherein the case is further provided with a faceplate that aids in retaining the modular movement inside the case and defines which portions of the front of the modular movement are visible through the case.

6. The portable device of claim **5** wherein the depth of the modular movement and the case are substantially similar so that when the modular movement is inserted into the receptacle, one side of the modular movement in an open end of the receptacle is approximately coplanar with a back of the case, and wherein the glass that is open through the faceplate is approximately coplanar with a top of the case.

7. The portable device of claim **6** wherein the faceplate has a shape different from that of the modular movement.

8. The portable device of claim **1** wherein the body houses a mechanical movement comprising:

components of a raw movement including a main plate, bridges, a train, a winding and setting mechanism and a regulator; and

a timing system, an escapement, a mainspring, and a time display, wherein the time display is covered by the glass of the modular movement.

9. The portable device of claim **1** wherein the body houses an electronic movement, and the plurality of layers further includes a battery.

10. The portable device of claim **9** wherein the electronic movement comprising a quartz movement.

11. The portable device of claim **9** wherein the modular movement can be used, operated and recharged both alone and when inserted into the portable device.

12. The portable device of claim **11** wherein the electronic movement comprises a computer-based modular movement, wherein the top layer of glass comprises a touchscreen and the plurality of layers further includes:

a printed circuit board including a memory and a processor for executing software that displays a user interface on the touchscreen and operates the modular movement,

the battery, and

a communications interface for receiving data remotely that is displayed and updated on the touchscreen.

13. The portable device of claim **12** wherein the user interface of the modular movement is controlled by a user interacting with the touchscreen through touch, such that a button or a dial for controlling the user interface are completely absent from both the modular movement and the case.

14. The portable device of claim **13** wherein once the modular movement is inserted into the receptacle of the case, the modular movement automatically determines characteristics of the case and configures the user interface based at least in part on the characteristics of the case.

15. The portable device of claim **13** wherein the user interface displayed on the touchscreen of the modular movement may include an icon carousel comprising a scrollable display of icons that are laid out along an arc of a wheel across the touchscreen, where only a subset of the icons on each side of a center position are visible on the touchscreen at a time; wherein the user may rotate/scroll the icons around the icon carousel to a left or right with a swipe of a finger in a corresponding direction along the icon carousel and when the icon carousel stops rotating, an icon in the center position is a currently active icon that can be selected or activated via finger touch.

16. The portable device of claim **12** wherein the portable device further includes one or more external batteries,

wherein the modular movement is configured to selectively determine whether to draw the power from at least one of: the battery, the one or more external batteries, and combination both.

17. The portable device of claim **1** wherein the receptacle is formed as an opening in a back of the case and the case includes a latching mechanism for removably retaining the modular movement, the latching mechanism being calibrated to account for when the case is worn and the modular movement is inserted into the receptacle, the modular movement is held in inside the receptacle at least in part by a wearer's body.

18. A method for manufacturing an interchangeable movement comprising:

assembling parts into a movement subassembly, such that the subassembly is a

complete working mechanism,

enclosing the subassembly in a body, and

integrating a glass with the body, thereby creating a modular movement; and

requiring a case of a portable device to have a receptacle for removably receiving the modular movement without tools and in a manner where the glass of the modular movement is visible through the case when the modular movement is inserted.

19. The method of claim **18** further comprising providing the modular movement with a standard size so that different modular movements from different manufacturers have a same size.

20. The method of claim **18** further comprising constructing the modular movement such that the modular movement is water resistant.

21. The method of claim **18** wherein requiring the case of the portable device to have the receptacle further comprises:

forming the receptacle in the case with a set of sidewalls whose number, shape, size, and depth are substantially similar to those of the modular movement; and

providing the case with a faceplate that aids in retaining the modular movement inside the case and defines which portions of the front of the modular movement are visible through the case.

22. The method of claim **21** wherein the depth of the modular movement and the case are substantially similar so that when the modular movement is inserted into the receptacle, one side of the modular movement is coplanar with an open end of the case, and wherein the glass that is open through the faceplate is approximately coplanar with a top of the case.

23. The method of claim **22** further comprising providing the faceplate with a shape different from that of the modular movement.

24. The method of claim **18** further comprising providing the modular movement with a subassembly comprising at least one of a mechanical movement and an electronic movement.

25. The method of claim **18** wherein the receptacle is formed in an opening in a rear of the case and wherein removably receiving the modular movement without tools further comprises providing the case with a latching mechanism and calibrating the latching mechanism to account for when the case is worn and the modular movement is inserted into the receptacle, the modular movement is held in inside the receptacle at least in part by a wearer's body.

26. A modular movement, comprising:

a movement subassembly comprising,

a touchscreen;

a printed circuit board including a memory and a processor for executing software that displays a user interface on the touchscreen and operates the modular movement,

a battery, and

wherein the movement subassembly is a complete working mechanism; and

a body for housing the movement subassembly such that the touchscreen is integrated with the body, and

wherein the modular movement is removably insertable into a case of a portable device without tools and in a manner whereby the touchscreen of the modular movement is visible through the case.

27. The modular movement of claim **26** wherein the modular movement is water resistant.

28. The modular movement of claim **26** wherein the user interface of the modular movement is controlled by a user interacting with the touchscreen through touch, such that a button or a dial for controlling the user interface are completely absent from both the modular movement and the case.

29. The modular movement of claim **28** wherein once the modular movement is inserted into the case, the modular movement automatically determines characteristics of the case and configures the user interface based at least in part on the characteristics of the case.

30. The modular movement of claim **27** wherein the user interface displayed on the touchscreen of the modular movement may include an icon carousel comprising a scrollable display of icons that are laid out along an arc of a wheel across the touchscreen, where only a subset of the icons on each side of a center position are visible on the touchscreen at a time; wherein a user may rotate/scroll the icons around the icon carousel to a left or right with a swipe of a finger in a corresponding direction along the icon carousel and when the icon carousel stops rotating, an icon in the center position is a currently active icon that can be selected or activated via finger touch.

31. The modular movement of claim **26** wherein the portable device further includes one or more external batteries, and wherein the modular movement is configured to selectively determine whether to draw power from at least one of: the battery, the one or more external batteries, and combination both.

32. A portable device comprising:

a modular movement having a body housing a plurality of layers, including:

a touchscreen,

a printed circuit board including a memory and a processor for executing software that displays a user interface on the touchscreen and operates the modular movement,

a battery, and

a case, wherein the case includes a receptacle for removably receiving the modular movement without need for a tool, such that the modular movement is interchangeable with at least a second portable device; and

wherein the user interface of the modular movement is controlled by a user interacting with the touchscreen through touch, such that a button or a dial for controlling the user interface are completely absent from both the modular movement and the case.

* * * * *