WINDING STEM FOR TIME-PIECES

Filed Nov. 28, 1961 2 Sheets-Sheet 1

FIG. 1

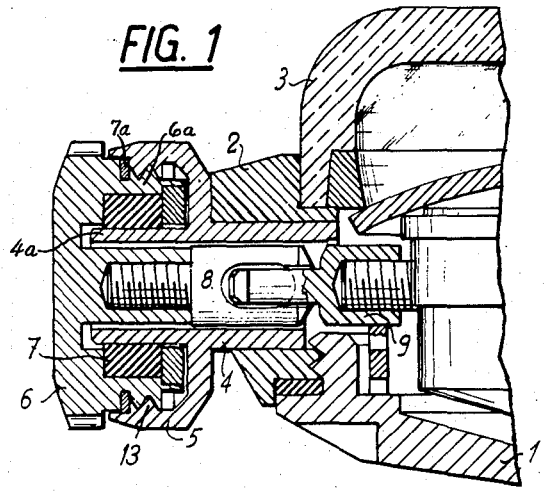

FIG. 2

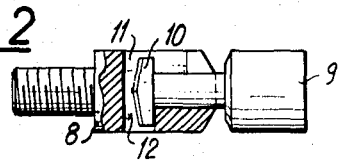

FIG. 3

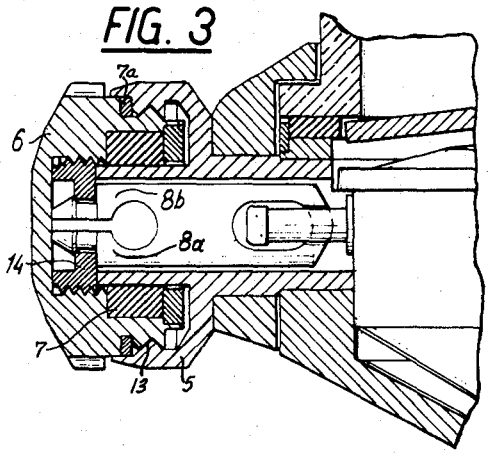

Petitioner Samsung Ex-1038, 0001

WINDING STEM FOR TIME-PIECES

Filed Nov. 28, 1961 2 Sheets-Sheet 2

FIG. 4

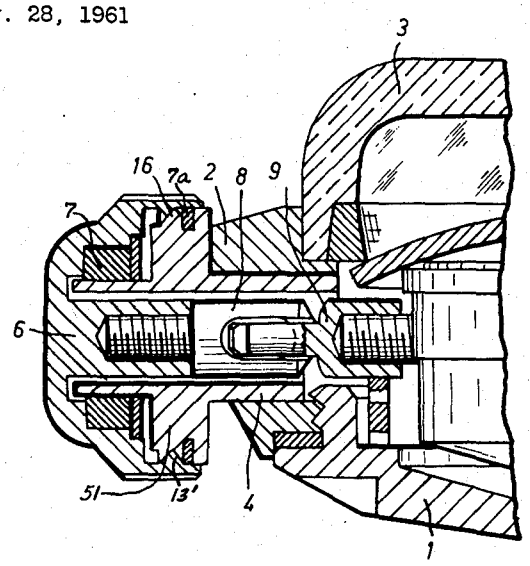

FIG. 7

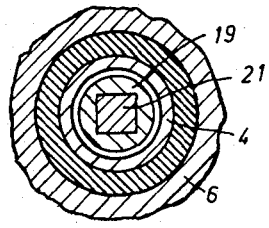

FIG. 6

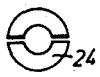

FIG. 5

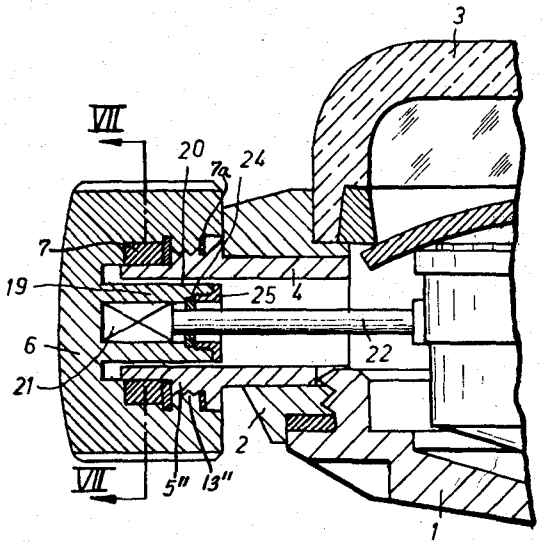

Petitioner Samsung Ex-1038, 0002

United States Patent Office

3,146,580

Patented Sept. 1, 1964

1

3,146,580

WINDING STEM FOR TIME-PIECES

John Simon, Rue de l'Industrie, Tramelan, Switzerland

Filed Nov. 28, 1961, Ser. No. 155,263
3 Claims. (Cl. 58—90)

My invention has for its object a winding stem for a time-piece and, more particularly, for a time-piece of the type including a tube rigid with its casing and round which the crown is fitted through the agency of a fluid-tight packing, said crown being adapted, when not in use, to be screwed over the watch or time-piece case.

According to a primary object of my invention, said tube includes a section provided with a thread coaxial with the tube and engageable by the crown when the latter is in its position of non-use, so as to be housed at least partly within the space defined by said tube without substantially projecting beyond the outer end of the latter.

According to a further object of my invention, the crown is connected with the winding stem through an axial recess with a polygonal cross-section formed on one of the cooperating parts, the crown and the stem, so as to allow the sliding therein without any relative rotary movement of a projection of a same cross-section formed on the other part. My invention will be better understood upon reading of the following description given by way of example of four embodiments of said invention, reference being made to the accompanying drawings, wherein:

FIGS. 1 and 3 are axial cross-sections of the two first embodiments, while

FIG. 2 shows a detail of the winding stem according to FIG. 1.

FIG. 4 is an axial cross-section of a third embodiment.

FIG. 5 is an axial cross-section of a fourth embodiment.

FIG. 6 shows a detail of a washer forming part of said fourth embodiment.

FIG. 7 is a cross-section of FIG. 5 through line VII—VII.

In the different figures, the parts which remain the same in the different embodiments carry the same reference numbers.

In FIGS. 1 and 3, **1** designates the bottom of a watch case fitted over a case band **2** rigid with the rim inside which is secured the conventional glass **3**. Inside the case band and rim member is fitted with a hard fit a radial tube **4**, the body of which is provided with a cylindrical outer end portion **4***a* and with an annular collar terminating with a sleeve-shaped extension **5** arranged at a distance from the cylindrical portion **4***a* of the tube body coaxially therewith. **6** designates a crown having a skirt portion **6***a* fitted, with the interposition of a fluid-tight annular packing **7**, over the cylindrical section of the tube. Into an axial tapping of the crown **6** is screwed the outer section **8** of the winding stem, of which the inner section is shown at **9**. The two sections are interconnected in the manner illustrated in detail in FIG. 2, the head **10** of the inner section being fitted inside a rectangular groove **11** formed in the outer or upper section with a slight axial clearance therebetween as shown at **12**.

When not in use, the crown **6** is partly housed inside the annular gap separating the body of the tube **4** from the outer extension **5** on the latter. It is screwed for this purpose inside a tapping **13** formed in said extension and above said tapping, there is inserted a second fluidtight packing **7***a* between the crown and the sleeve-shaped extension. When it is desired to wind or to set to time the watch or the like time-piece, the crown **6** is unscrewed without this leading to any axial shifting of the inner or lower section **9** of the winding stem by reason of the presence of the above-mentioned clearance **12**.

2

In the embodiment illustrated in FIG. 3, the arrangement is the same except for the fact that the outer section **8** of the winding stem, instead of being screwed into the crown **6**, engages the latter through the agency of an elastic coupling. The latter is of a known type including two elastic arms **8***a* and **8***b* which may be urged towards each other for engagement inside an outwardly threaded socket **14** screwed into a corresponding recess in the crown and provided with two inner projections engaging rectangular grooves formed in each of said elastic arms **8***a* and **8***b*.

In FIGS. 1 and 3, the required fluidtightness is ensured similarly by the two packings **7** and **7***a* and, furthermore, the inner packing **7** is protected against the introduction of foreign bodies which might objectionably subject the packing and the tube to wear, since the crown remains almost permanently screwed over the tube **4**.

The embodiment illustrated in FIG. 4 differs from that of FIG. 1 through the fact that the skirt of the crown **6** is tapped and, when inoperative, it is screwed over the thread **13'** formed outwardly of an annular collar-forming section **5'** of the tube. When thus screwed in position, the crown has only its outer part projecting beyond the outer end of the tube.

In FIG. 4, the parts similar to the parts illustrated in FIG. 1 have been designated by the same reference numbers. Thus **1** designates the bottom of the watch case, **2** the case band rigid with the rim carrying the glass **3**, while the threaded section of the tube **4** has received the reference number **5'**, since it has a different shape from the threaded extension of FIGS. 1 and 3 and forms a collar perpendicular to the axis of the tube. Again, **6** designates the crown fitted over the tube with the interposition of the packing **7**, said crown being, as precedingly, adapted to revolve with the winding stem, an axial clearance being provided also as precedingly by the stem, made of two sections **8** and **9** adapted to slide axially with reference to each other.

In FIGS. 5 to 7, the parts which are the same as in the preceding embodiments have received the same reference numbers. This is the case of the bottom **1** screwed into the case band **2** carrying the glass **3** in its rim, **4** being again the tube fitted inside the case band. In the embodiment according to FIGS. 5 to 7, said tube **4** is provided with an annular section **5''** provided with an outer thread **13''**. **6** designates again the crown fitted over the winding stem, so as to rotate in unison therewith, while it is allowed a slight axial shifting with reference thereto. To this end, in the embodiment now being described, the crown **6** is provided with an inwardly projecting sleeve **19** having an axial bore **20** with a square cross-section closed at its end facing away from the crown by a washer **24** (FIG. 6) made of two parts which are complementary and semicircular, as illustrated in FIG. 5 and held in position by an outwardly threaded socket **25**. Inside said bore **20** may slide an extension **21** of the actual winding stem, **22**, which extension has also a square cross-section, so as to snugly fit the bore **20**, while it is slightly shorter than said bore.

The crown **6** is tapped and when inoperative, it is screwed over the thread **13''** on the tube section **5''**, whereby only the outer part of the crown projects then beyond the upper end of the tube and, at this moment, there is provided, underneath the extension **21** of the winding stem, a slight clearance at **23** which allows freely unscrewing the crown **6** when it is desired to operate the winding stem.

The pitch of the cooperating threads **13**, **13'**, **13''** on the stem and the crown in the different embodiments may be as well left-handed or right-handed, as desired.

Petitioner Samsung Ex-1038, 0003

What I claim is:

1. In combination with a time-piece, including a case, a tube rigid with the time-piece case, including an extension projecting radially out of the time-piece case and having a cylindrical outer end portion and an outwardly directed flange portion, a winding stem slidingly carried inside said tube, a crown carried by the outer end of said stem and including a peripheral skirt detachably secured to said flange on the tube and having an inner cylindrical surface coaxially surrounding said cylindrical portion of the tube extension to form with said extension an an annular space, and an annular packing fitted inside said annular space between the coaxial cylindrical surfaces of the crown skirt and the tube extension to provide a seal between said cylindrical surfaces of the crown and tube.

2. In combination with a time-piece, including a case, a tube rigid with the case, including an extension projecting radially out of said case and having a cylindrical end portion and an outwardly directed flange extending outside the case and terminating with an annular section surrounding coaxially said cylindrical end portion, a winding stem slidingly carried inside said tube, a crown carried by the outer end of said stem and including a peripheral skirt detachably secured to the annular section of said flange on the tube and having an inner cylindrical surface coaxially surrounding said cylindrical end portion to the tube extension to form with said extension an

annular space and an annular packing fitted inside said space between the coaxial cylindrical surfaces of the crown skirt and the tube extension to provide a seal between said cylindrical surfaces of the crown and tube.

3. In combination with a time-piece, including a case, a tube rigid with the case including an extension projecting radially out of said case and having a cylindrical end portion and an outwardly directed flange extending outside the case and having threads thereon, a winding stem slidingly carried inside said tube, a crown carried by the outer end of said stem and including a peripheral skirt threadedly engaging the threads of said flange on the tube and having an inner cylindrical surface coaxially surrounding said cylindrical surface of the tube extension to form with said extension an annular space, an annular packing fitted inside said space between the coaxial cylindrical surfaces of the crown skirt and the tube extension to provide a seal between said cylindrical surfaces, and a second annular packing providing a seal between radial surfaces of said skirt and flange.

References Cited in the file of this patent

UNITED STATES PATENTS

237,377 Fitch ---------- Feb. 8, 1881

FOREIGN PATENTS

211,693 Switzerland ---------- Jan. 2, 1941