Trials@uspto.gov
571-272-7822

Paper 80
Date: April 12, 2022

UNITED STATES PATENT AND TRADEMARK OFFICE

BEFORE THE PATENT TRIAL AND APPEAL BOARD

GODBERSEN-SMITH CONSTRUCTION COMPANY
d/b/a/ GOMACO CORPORATION,
Petitioner,

v.

GUNTERT & ZIMMERMAN CONST. DIV., INC.,
Patent Owner.

IPR2020-01698
Patent 10,029,749 B2

Before PATRICK R. SCANLON, HYUN J. JUNG, and
JAMES J. MAYBERRY, *Administrative Patent Judges.*

MAYBERRY, *Administrative Patent Judge*.

JUDGMENT
Final Written Decision
Determining All Challenged Claims Unpatentable
35 U.S.C. § 318(a)

I. INTRODUCTION

Petitioner, Godbersen-Smith Construction Company, d/b/a GOMACO Corporation, challenges claims 1–20 (the "Challenged Claims") of U.S. Patent No. 10,029,749 B2 (Ex. 1001, the "'749 patent"), which is assigned

to Patent Owner, Guntert & Zimmerman Const. Div., Inc. We have jurisdiction under 35 U.S.C. § 6, and we issue this Final Written Decision under 35 U.S.C. § 318(a) and 37 C.F.R. § 42.73. For the reasons below, we conclude that Petitioner has proven, by a preponderance of the evidence, the unpatentability of claims 1–20 of the '749 patent.

A. Procedural History

Petitioner filed a Petition ("Pet.") requesting *inter partes* review of the Challenged Claims. Paper 1. Patent Owner filed a Preliminary Response to the Petition. Paper 8.[1] With our authorization (Paper 10), Petitioner filed a Preliminary Reply (Paper 12) to the Patent Owner Preliminary Response and Patent Owner filed a Preliminary Sur-reply (Paper 15) to the Preliminary Reply.[2] Upon review of the arguments and supporting evidence, we instituted an *inter partes* review of all claims and grounds asserted in the Petition. Paper 20 ("Decision on Institution" or "Dec. on Inst.").

Patent Owner filed a Patent Owner Response to the Petition. Paper 41[3] ("PO Resp."). Petitioner filed a Reply to the Patent Owner Response. Paper 57[4] ("Pet. Reply"). Patent Owner filed a Sur-reply to Petitioner's Reply. Paper 66[5] ("PO Sur-reply").

A consolidated oral hearing for this proceeding and IPR2021-00050 was held on January 19, 2022, and the transcript for that hearing is entered in the record. Paper 76[6] ("Tr.").

---

[1] Paper 7 is the public version of the Patent Owner Preliminary Response.
[2] Papers 13 and 16 are public versions of the Preliminary Reply and Preliminary Sur-reply, respectively.
[3] Paper 40 is the public version of the Patent Owner Response.
[4] Paper 58 is a public version of the Petitioner's Reply.
[5] Paper 65 is a public version of the Patent Owner's Sur-reply.
[6] Paper 79 provides a redacted version of the Transcript.

B. Real Parties in Interest

Petitioner identifies Godbersen-Smith Construction Company, "for which GOMACO Corporation is a registered active fictitious name," as the real party-in-interest. Pet. 110. Petitioner contends that "[n]o unnamed entity is funding, controlling, or otherwise has an opportunity to control or direct this Petition or Petitioner's participation in any resulting" *inter partes* review. *Id.*

Patent Owner identifies itself as the real party-in-interest. Paper 5, 1.

C. Related Matters

Petitioner and Patent Owner state that they are parties to ongoing litigation involving the '749 patent in the U.S. District Court for the Northern District of Iowa, in a case styled *Zimmerman Const. Div., Inc. v. GOMACO Corp.*, case no. 5:20-cv-4007-CJW-KEM. Pet. 110, Paper 5, 1; *see also* Ex. 1155 (staying the litigation pending this *inter partes* review).

Petitioner filed three other *inter partes* review proceedings, each challenging one of three other patents owned by Patent Owner that are related to the '749 patent. *See* IPR2021-00050, Paper 1 (challenging US 9,708,020 B2)[7]; IPR2021-00136, Paper 1 (challenging US 9,908,571 B2); IPR2021-00234, Paper 1 (challenging US 10,196,101 B2).

D. '749 Patent

The '749 patent, titled "Automatically Adjusting Swing Legs for Mounting and Aligning and Reorienting Crawlers," issued July 24, 2018, from an application filed January 17, 2018. Ex. 1001, codes (54), (45), (22). The '749 patent ultimately claims priority, through both continuation and

[7] A Final Written Decision for IPR2021-00050 is being entered concurrently with this Decision.

continuation-in-part applications, to a provisional patent application filed March 26, 2010. *Id.* at 1:8–19.

The ’749 patent is directed to “concrete slipform paving machines.” Ex. 1001, 1:23–24. We reproduce Figure 1 from the ’749 patent below.

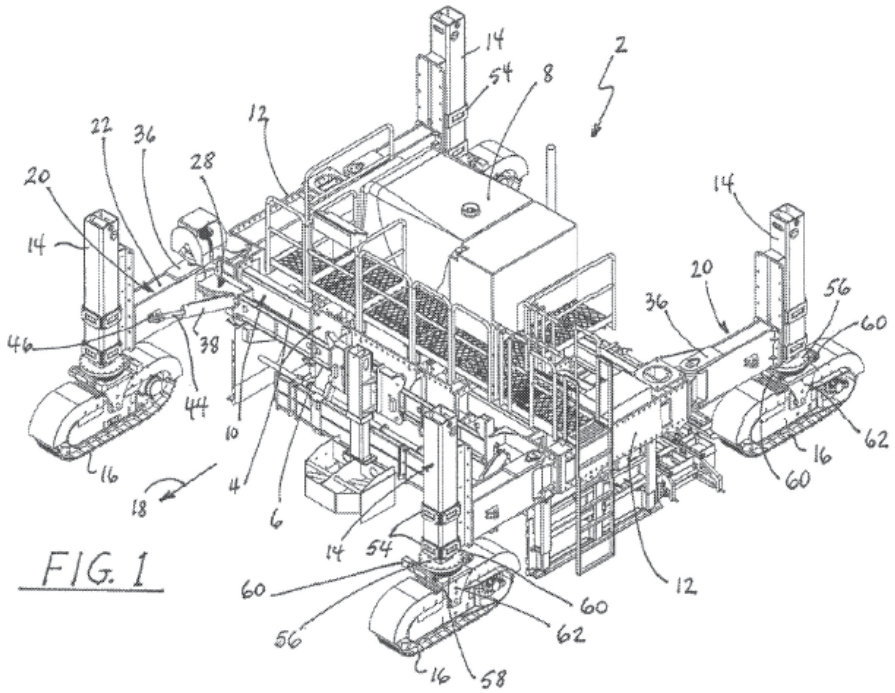

Figure 1 depicts “a front elevational, perspective view of a complete paving machine having pivotable swing legs with a jacking column and a crawler.” *Id.* at 7:56–58. Paving machine 2 includes tractor frame 4, which is defined by center module 6. *Id.* at 8:47–49. Side bolsters 12 are secured to support beams 10, and upright jacking columns 14 are mounted near the ends of the bolsters. *Id.* at 8:52–57. Crawlers 16 are mounted to the lower ends of the jacking columns, and the crawlers “are rotatable relative to the jacking columns about vertical axes, an arrangement that is known in the art.” *Id.* at 8:59–8:63.

Each crawler 16 and its associated jacking column 14 are mounted to one of four swing legs 20. Ex. 1001, 9:24–26. Swing legs 20 are mounted

to side bolsters 12 using hinge brackets 28, which allow the swing legs to move relative to the side bolsters, with hydraulic actuator 38 used to pivot the swing legs. *Id.* at 9:26–53; Figs. 2, 3.

Whenever swing legs 20 are pivoted inwardly or outwardly relative to tractor frame 4, the orientation of the crawler track has to be changed to keep the track oriented in the paving direction. Ex. 1001, 10:46–55. To affect this change, rotary actuator 60 is positioned between the bottom of each jacking column and each crawler. *Id.* at 11:35–56, Fig. 4.

Each swing leg assembly includes two angular position transducers 70, 78. Ex. 1001, 11:57–60, 12:20–22, Figs. 4A, 5. These transducers generate signals indicating any changes in the angular orientation of crawler yoke 62 relative to jacking column 14 or the swing leg relative to the side bolster. *Id.* at 12:1–6, 23–31. The '749 patent describes using transducers 70, 78 in a feedback loop to automatically adjust the angular orientation of the crawler tracks without having to stop the machine or manually adjust the tracks or swing legs:

> Onboard computer or processor 82 and the associated transducers 70, 78 form a feedback loop in which the computer receives the angular position signal from swing leg transducer 78. When the angular position of the swing leg changes, the output signal from transducer 78 changes correspondingly. As a result of this orientational change of the swing leg, the angular orientation of the crawler tracks becomes angularly inclined relative to paving direction 18. Computer 82 calculates by how much the angle of the crawler track has to be changed relative to the jacking column (which has also been angularly offset relative to the transport direction by the swivel motion of the swing leg) to reset the crawler track suspended from yoke 62 to the angular orientation of the desired paving direction. The onboard computer then signals by how much worm gear drive 60 must rotationally adjust the orientation of yoke 62 and crawler tracks 16 to again align the crawler tracks with the paving direction.

> This process is repeated each time the angular position of the swing leg is changed, or when for other reasons the angular orientation of the crawler tracks becomes misaligned from the desired paving direction of the machine.

Id. at 12:38–59.

In summarizing the invention, the '749 patent states that "the crawler track can be relocated when the machine is walked forward or backward while the crawler tracks at all times stay in their straight-ahead normal operating orientation and position without requiring any manual mechanical or electronic adjustments." Ex. 1001, 6:48–52.

> The crawler tracks can also be relocated when the machine is stationary by supporting the weight of the machine off the ground, then hydraulically lifting each crawler track (one at a time) off the ground, and thereafter using the swing leg hydraulic cylinder and position transducer working in conjunction with the power drive or steering cylinder between the jacking column and the crawler track for moving the crawler track to another position.

Id. at 6:52–60.

E. Illustrative Claims

Of the Challenged Claims, claims 1 and 17 are independent claims. Claim 1, reproduced below, is representative.

> 1. A swing leg assembly, comprising:
>
> a swing leg configured to mechanically couple with a surface of a module frame;
>
> a crawler track;
>
> an upright jacking column secured to the swing leg, having a rotary connection between the jacking column and the crawler track permitting relative rotational movements of the crawler track and the jacking column about a first upright axis;
>
> a first angular position transducer between the jacking column and the crawler track, configured to emit a first signal which is indicative of an angular orientation of the crawler track relative to the jacking column;

> a second angular position transducer between the swing leg and the module frame, configured to emit a second signal which is indicative of an angular orientation of the swing leg relative to the module frame;
>
> a power drive between the jacking column and the crawler track, configured for translating relative rotational movements between the jacking column and the crawler track; and
>
> a processor operable to receive the first and second signals and configured to emit a control signal for activating the power drive and thereby rotationally move the crawler track relative to the jacking column to maintain an orientation of the crawler track in response to changes of the first signal caused by pivotal motions of the swing leg about an upright pivot shaft.

Ex. 1001, 22:40–67.

Claim 17 is similar to claim 1, but further recites additional components of a paving machine, including a "module frame" and "two or more swing leg assemblies," with each assembly including the elements recited in claim 1. *Id.* at 23:54–24:33.

F. Prior Art and Asserted Grounds

Petitioner asserts that the Challenged Claims are unpatentable based on six grounds:

Claim(s) Challenged	35 U.S.C. §[8]	References/Basis
1–11, 13–17, 19, 20	103	CIII[9], Rio[10]
18	103	CIII, Rio, Smolders[11]
1–10, 13–17, 19, 20	103	CIII, Littman[12]
18	103	CIII, Littman, Smolders
11, 12	103	CIII, Rio, Widdrington[13]
11, 12	103	CIII, Littman, Widdrington

The following subsections provide brief descriptions of the asserted prior art references.

1. CIII

CIII, titled "Commander III New Generation Trimmer/Paver Operator Service Manual, G21 Controls," is an operating manual for the Gomaco Commander III ("CIII paver"), one of Petitioner's paving machines. *See*

[8] The relevant sections of the Leahy-Smith America Invents Act ("AIA"), Pub. L. No. 112–29, 125 Stat. 284 (Sept. 16, 2011), took effect on March 16, 2013. Because the Challenged Claims of the '749 patent could claim priority to an application filed before that date, our citations to 35 U.S.C. § 103 are to its pre-AIA version. *See also* Pet. 4–5 (asserting that the references are prior art under "pre-AIA" § 102).
[9] GOMACO, Corp., "Commander III New Generation Trimmer/Paver Operator Service Manual, G21 Controls," Rev. 1.4 (2002) (Ex. 1005, "CIII").
[10] Rio, et. al., US 7,523,995 B2, issued April 28, 2009 from an application filed July 14, 2005 (Ex. 1006, "Rio").
[11] Smolders et al., US 6,481,924 B1, issued November 19, 2002 (Ex. 1010, "Smolders").
[12] Littman et. al., US 4,558,758, issued December 17, 1985 (Ex. 1007, "Littman").
[13] Widdrington, US 3,252,349, issued May 24, 1966 (Ex. 1008, "Widdrington").

Ex. 1005, 1-2[14]. CIII indicates that it is revision number 1.4 and includes a copyright date of 2002. *Id.* at 3.

We reproduce an annotated version of a drawing of the CIII paver, below.

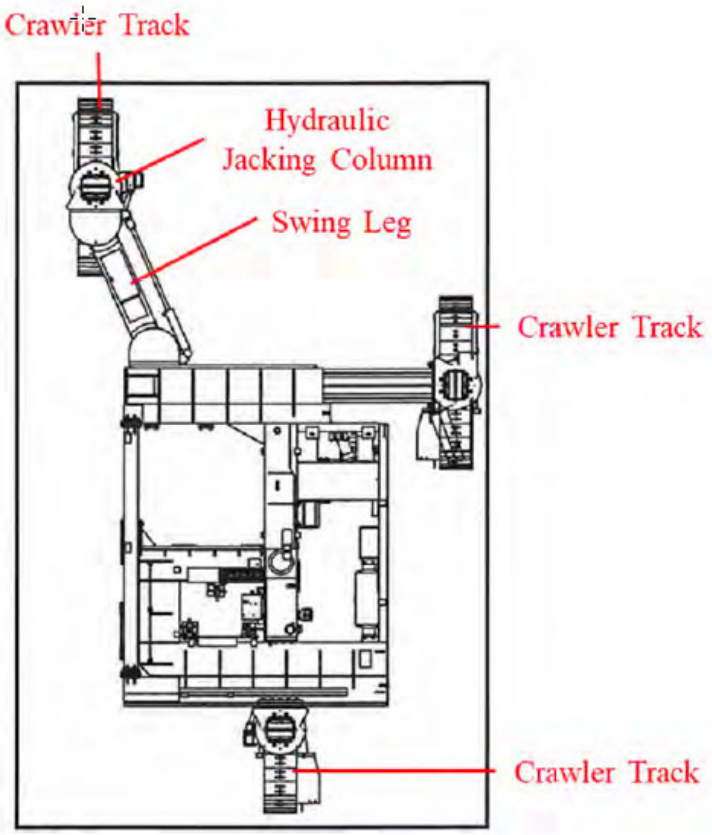

Pet. 13. This image depicts a plan view of a three-crawler version of the CIII paver, with annotations added by Petitioner that identify the crawler tracks, jacking column, and swing leg. We reproduce two additional images from CIII bearing Petitioner's annotations below.

[14] We refer to the pagination of the operating manual, rather than the pagination of the exhibit as provided by Petitioner.

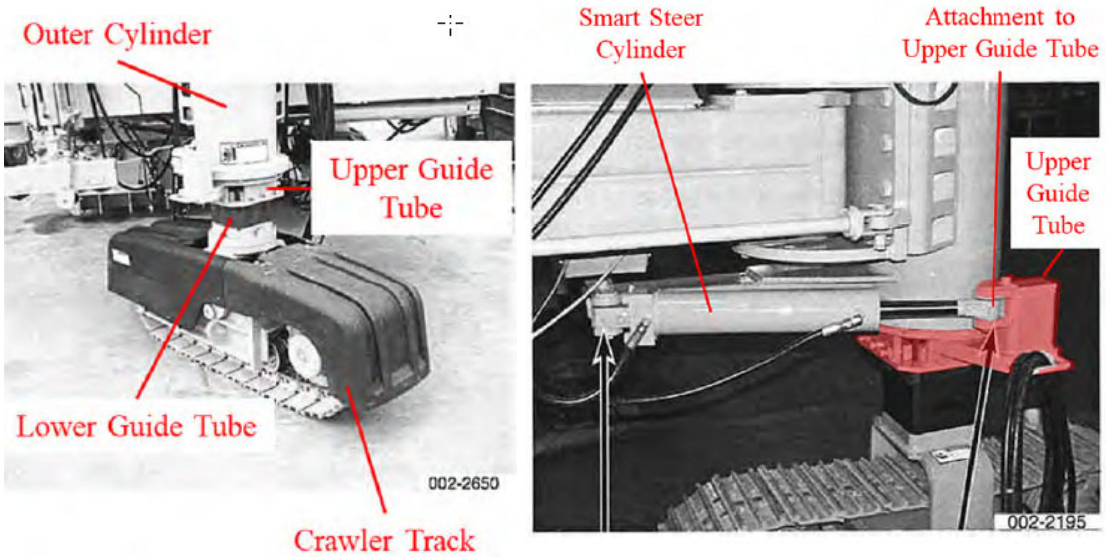

Id. at 15, 17. The image on the left depicts an annotated image of a crawler and lower portion of a jacking column of CIII, and the image on the right depicts a "smart steer cylinder" attached to the lower portion of the jacking column. *Id.* at 15–17. "[T]he steering cylinder, when actuated, rotates the guide tubes and crawler track in unison relative to the outer cylinder." *Id.* at 16 (referencing Ex. 1005, 8-105–107, 8-71–72, 5-35, 5-37).

CIII includes an electronic steering system that includes a sensor, feedback potentiometer, servo valve, and control loop. Ex. 1005, 8-105. "The feedback pot[entiometer] measures the position of the track and sends a continuous signal to the [controller], indicating the track position" and the controller compares the steer and feedback potentiometer signals and causes the track to rotate to the desired orientation. *Id.* at 8-106.

2. Rio

Rio, titled "Milling Machine," issued April 28, 2009. Ex. 1006, codes (54), (45). Rio is generally directed to machines that treat road surfaces, "and more particularly to a road planer or milling machine." *Id.* at 1:5–7. We reproduce Rio's Figure 2, as annotated in the Petition, below.

[redacted]

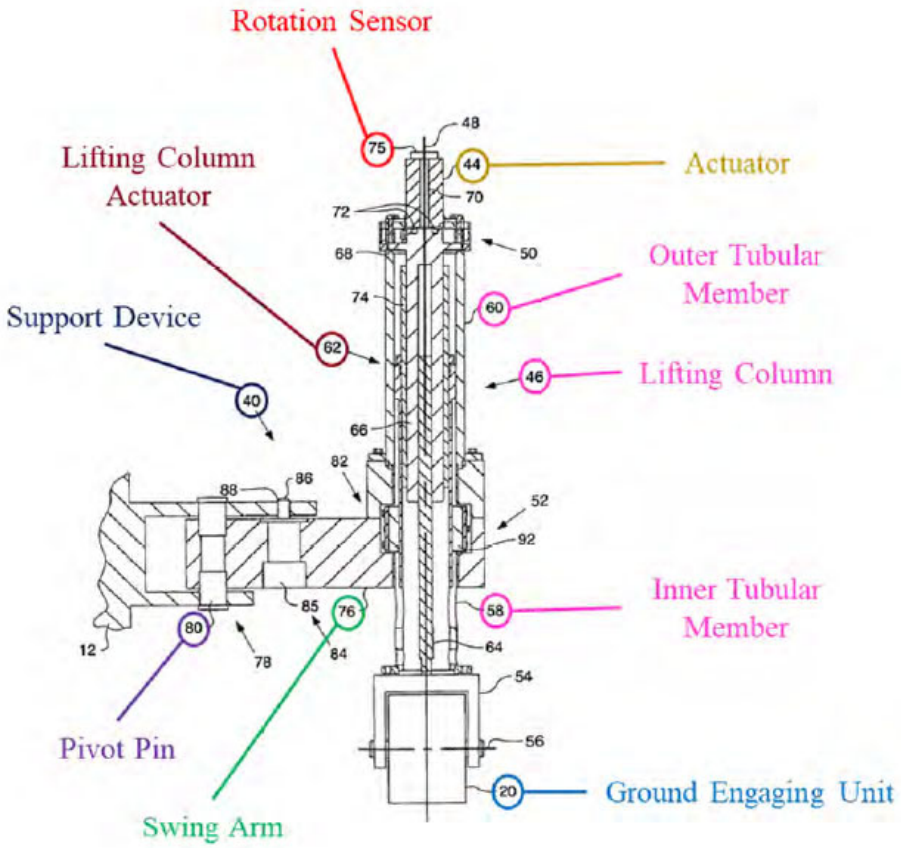

Pet. 25. Figure 2 depicts a longitudinal section of a portion of Rio's cold planer, showing a swing arm, lifting column, and ground engaging unit. Ex. 1006, 3:29–30, 3:62–64, 4:51–53, 6:12–15. Annotations identify ground engaging unit 20, support device 40, actuator 44, lifting column 46, inner tubular member 58, outer tubular member 60, lifting column actuator 62, rotation sensor 75, swing arm 76, and pivot pin 80.

Actuator 42 (not depicted above) connects to support device 40 and pivots swing arm 76 relative to frame 12. Ex. 1006, 4:40–44; *see id.*, Fig. 3 (depicting actuator 42). Actuator 44 rotates ground engaging unit 20 to maintain it in the proper orientation in response to swing arm 76 pivoting. *Id.* at 4:44–47. Controller 32 controls the movement of actuators 42, 44. *Id.* at 4:47–50. Support device 40 includes lifting column 46, which is associated with ground engaging unit 20. *Id.* at 4:51–53. Actuator 44 is

[redacted]

connected to lifting column 46 and causes at least a portion of the lifting column 46 to rotate about axis 48 to change the orientation of ground engaging unit 20. *Id.* at 4:56–59.

Preferably, at least one of actuators 42, 44 is a rotary actuator, such as "a double helix sliding spline design to produce high torque rotary motion in a compact device." Ex. 1006, 4:61–5:1. "[O]ther rotary actuators such as worm or sun gear designs . . . may also be employed with good result. Such use of a rotary actuator provides a compact apparatus to achieve rotary motion without the need for complicated and bulky linkages, and . . . provide[s] fine rotary steering control." *Id.* at 5:1–7. Rio discloses that "actuator 44 [may be] positioned on the lifting column 46 at a location spaced apart from . . . actuator 42 along . . . axis 48," and, "[p]referably, . . . is located at an upper portion 50 of the lifting column 46." *Id.* at 5:8–12.

Controller 32 receives ground engaging unit pivot position signal 122 and ground engaging unit rotational position signal 124. Ex. 1006, 6:65–7:13. Pivot sensor 83 generates signal 122 to indicate the instantaneous angular position of swing arm 76 relative to frame 12. *Id.* at 7:19–23. Rotation sensor 75 generates signal 124 to indicate the instantaneous rotation angle of the ground engaging unit 20. *Id.* at 7:23–27. Controller 32 sends control signals to actuators 42, 44. *Id.* at 7:28–30.

In operation, for example, controller 32 actuates actuator 42 to move swing arm 76. Ex. 1006, 8:18–32. "[P]ivot sensor 83 tracks this motion and sends responsive pivot position signals 122 to . . . controller 32," which "responsively actuates . . . actuator 44 to counter-rotate . . . ground engaging unit 20 to maintain it in the same running direction as [swing arm 76] moves toward the retracted position." *Id.* at 8:32–37.

3. Smolders

Smolders, titled "Slip-Form Paver," issued November 19, 2002. Ex. 1010, codes (54), (45). Smolders is generally directed "to a slip-form paver and a truck assembly for a construction machine." *Id.* at 1:3–4. We reproduce an annotated version of Smolder's Figure 1, from the Petition, below.

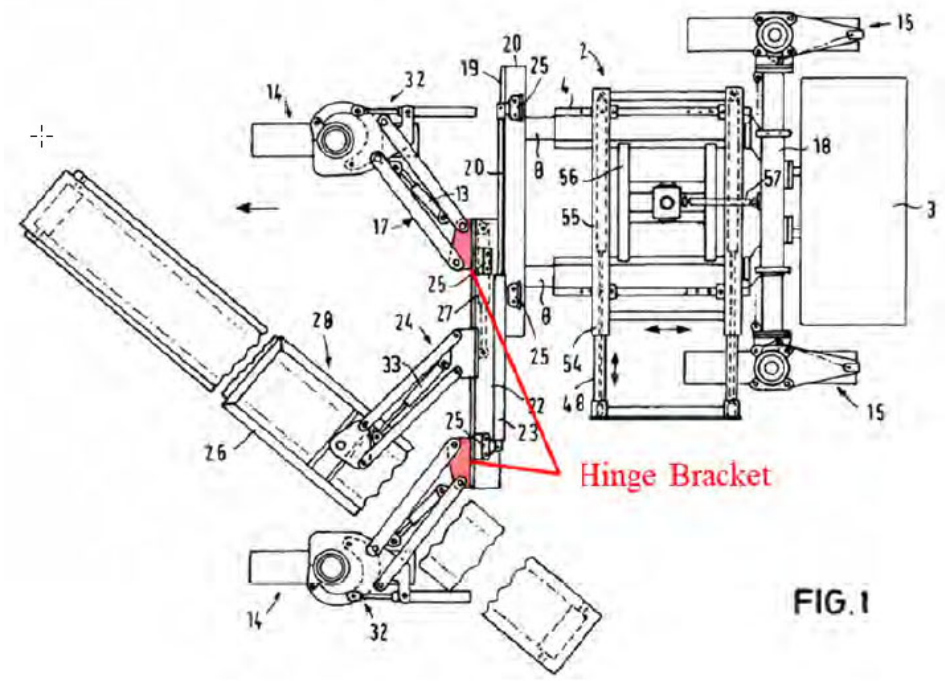

Pet. 77. Figure 1 depicts "a plan view of [Smolders's] slip-form paver," with annotations, in red, showing hinged brackets. Ex. 1010, 3:32. Relevant to this proceeding, Smolder's slip-form paver includes a hinged bracket on multiple swing legs. *Id.* at Fig. 1.

4. Littman

Littman, titled "Prime Mover," issued December 17, 1985. Ex. 1007, codes (54), (45). Littman is generally directed "to a prime mover having a plurality of elongated, segmented legs with individual steerable drive means on each so as to enable the prime mover to be easily moved to and

positioned properly in a wide variety of environments and terrains." *Id.* at 1:6–10. We reproduce Littman's Figures 1, 2, and 4, below.

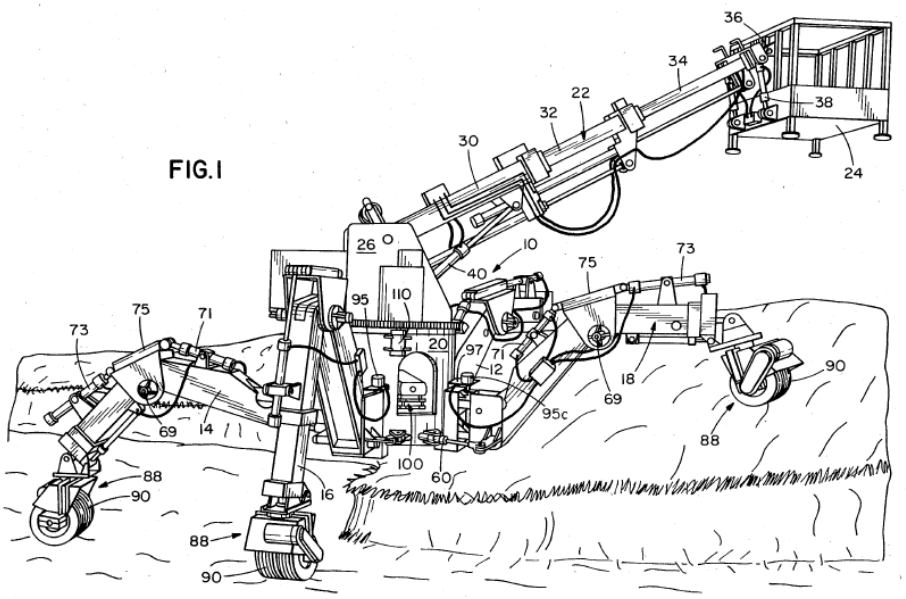

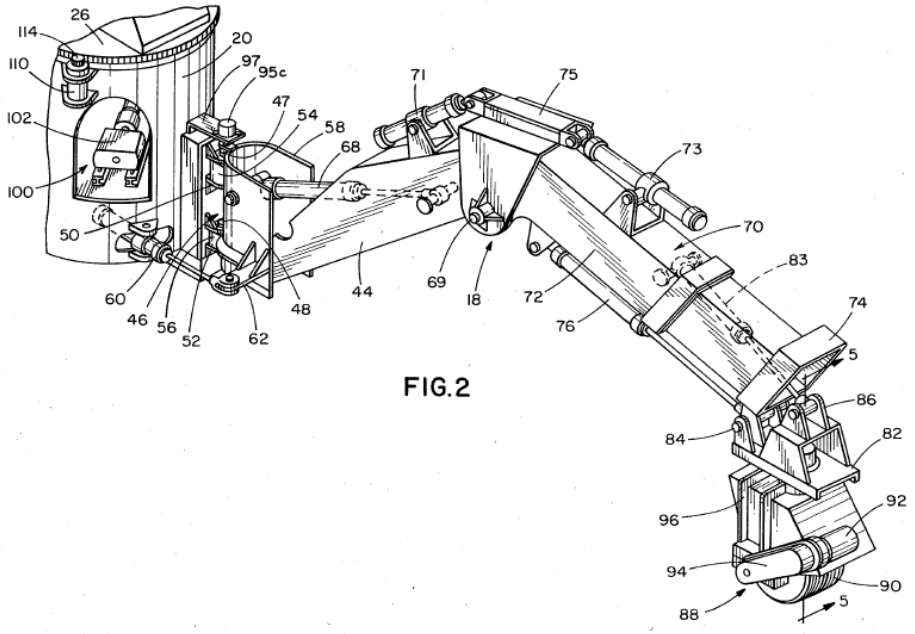

FIG.2

[redacted]

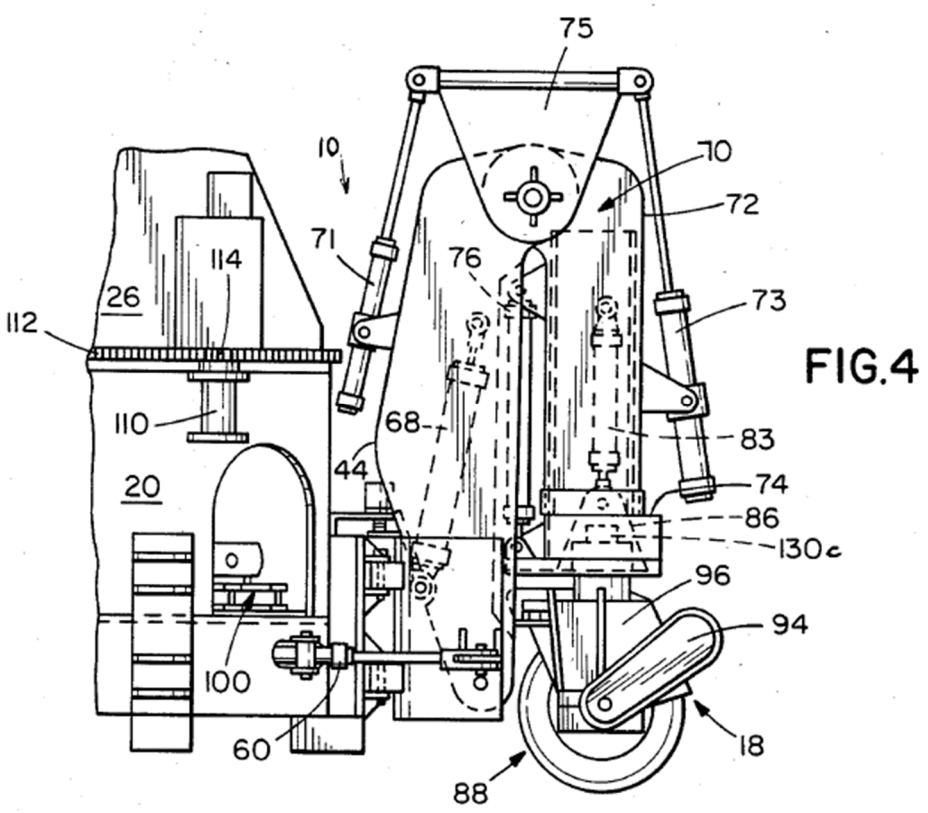

Figure 1 depicts "a perspective view of a prime mover illustrated in use on hilly or uneven terrain, with each of the legs at least partially extended," and Figure 2 depicts "an enlarged view illustrating . . . [an] elongated leg." Ex. 1007, 2:18–22. Figure 4 depicts "a side view of the prime mover illustrating one leg in the fully retracted position." *Id.* at 2:25–26.

Prime mover 10 includes four elongated legs 12, 14, 16 and 18 connected to central body 20. Ex. 1007, 2:64–3:3. Legs 12, 14, 16 and 18 have multiple sections that pivot relative to one another. *Id.* at 3:31–32. Leg 18 (Figures 2, 4) includes first section 44 pivoted about pivot means 46 for moving sideways of central body 20 using actuating means 60. *Id.* at 3:33–43.

Second section 70 includes outer box-like member 72 and telescoping box-like member 74. Ex. 1007, 3:56–58. Section 82 is pivotally connected to member 74, with actuating means 84 pivoting section 82 relative to second section 70. *Id.* at 4:3–8. Drive means 88, connected to section 82, includes wheel means 90, which may be a single wheel, dual wheels, or tracks. *Id.* at 4:13–21.

We reproduce an annotated version of Littman's Figure 5, from the Petition, below.

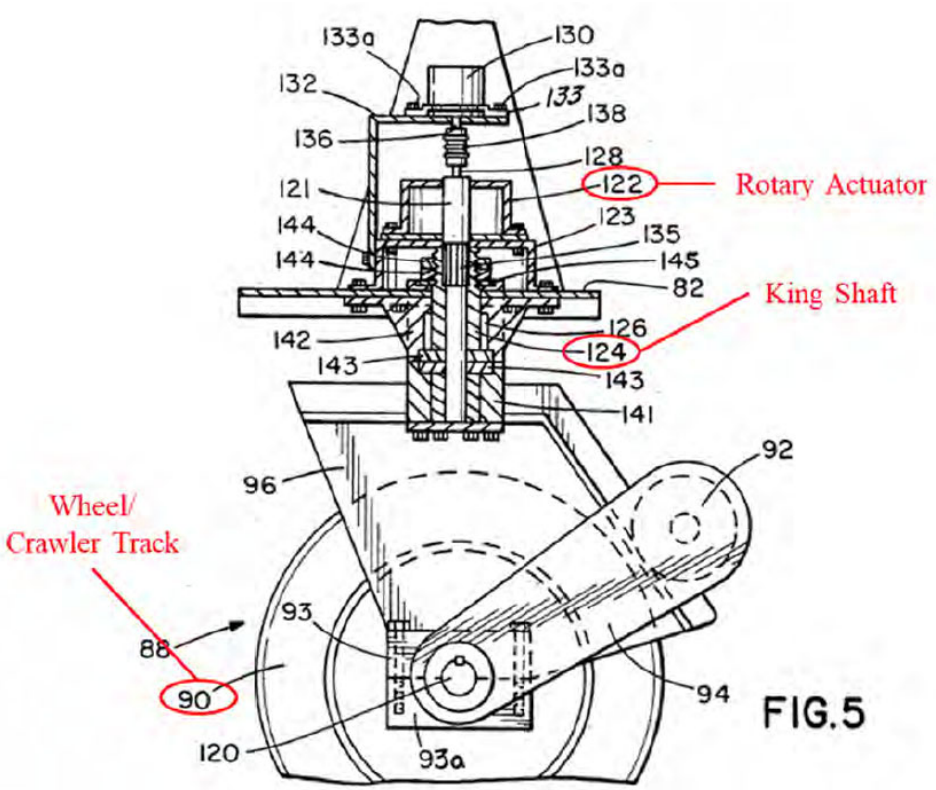

Pet. 87. Figure 5 depicts "a cross-sectional detail view of a drive means taken generally along the line 5-5 of" Figure 2. Ex. 1007, 2:28–29. Wheel means 90 may be rotated about a horizontal axis, through axle shaft 120, and a vertical axis through king pin or shaft 124, with rotation about the vertical axis caused by actuator 122. *Id.* at 4:27–32, 5:14–42.

> In the four-wheel parallel steering mode of operation, the steering command comes from the synchro transmitter 175 which is operatively connected to the steering wheel or steering command 176. The signal is directed to the four synchro differential transformers 95a, 95b, 95 and 95c, which are located at the pivot points of the stabilizing legs 12, 14, 16 and 18, respectively, and then to the four synchro control transformers 130a, 130b, 130 and 130c, which are located at the wheels. The synchro differential transformers 95a, 95b, 95 and 95c add or subtract the leg position angle from the steering command angle to provide a signal to the wheel synchro control transformers 130a, 130b, 130 and 130c, which is independent of the position of the stabilizing legs. When the wheels 90 are driven to the correct position by the hydraulic rotary actuators 122a, 122b, 122 and 122c, the output of the rotor of the synchro control transformers 130a, 130b, 130, and 130c is brought to the null, that is no output, and the positioning servos are commanded to stop.

Ex. 1007, 8:42–61; *see also id.* at Figs. 13–15 (depicting the control system).

5. Widdrington

Widdrington, titled "Gear Drive Mechanism," issued May 24, 1966. Ex. 1008, 1. Widdrington discloses a worm gear mechanism. *Id.* at 1:9–12, 6:1–5. We reproduce an annotated version of Widdrington's Figure 10, from the Petition, below.

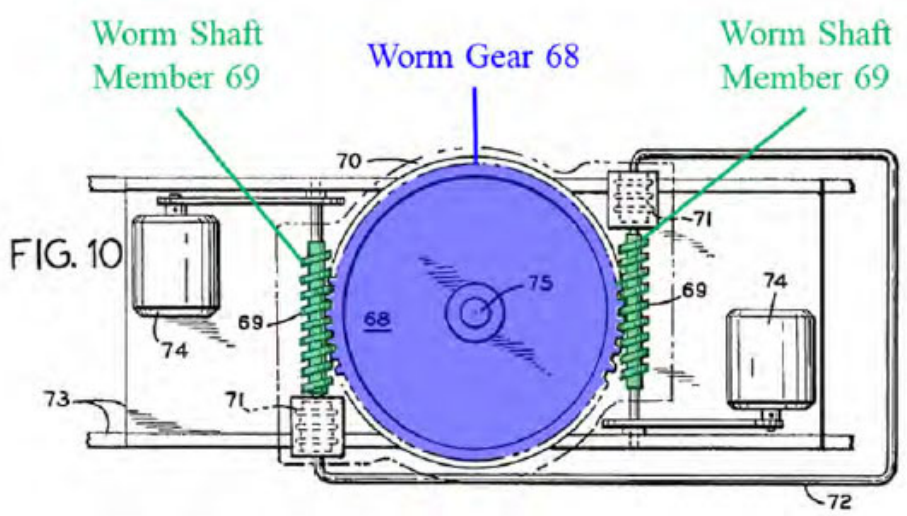

[redacted]

Pet. 106. Figure 10 depicts a schematic of an "externally toothed gear." Ex. 1008, 5:72–73. Annotations identify worm gear 68, in violet, and worm shaft members 69, in green. Relevant to this proceeding, Widdrington discloses that the depicted gear "is in the nature of a worm gear 68 engaged by a plurality of worm shaft members 69 equipped with a torque balancing hydraulic pressure system." *Id.* at 6:1–4.

II. CIII AS A PRINTED PUBLICATION

"A petitioner in an inter partes review may request to cancel as unpatentable 1 or more claims of a patent . . . only on the basis of prior art consisting of patents or *printed publications*." 35 U.S.C. § 311(b) (2018) (emphasis added). As such, whether an asserted, non-patent reference qualifies as a printed publication is a threshold issue in evaluating a petitioner's grounds of unpatentability. A petitioner bears the burden of proving that a non-patent reference qualifies as a printed publication. *Acceleration Bay, LLC v. Activision Blizzard Inc.*, 908 F.3d 765, 772 (Fed. Cir. 2018) ("As petitioner, Blizzard had the burden to prove Lin is a printed publication."). Patent Owner argues that Petitioner has not met its burden as to CIII. PO Resp. 3.

A. Level of Ordinary Skill

Public accessibility of a reference centers on whether the reference is disseminated or otherwise made available to person having ordinary skill in the art. *See Jazz Pharm., Inc. v. Amneal Pharm.*, LLC, 895 F.3d 1347, 1355–56 (Fed. Cir. 2018). As such, we start by defining the level of ordinary skill.

1. Petitioner's contentions

Petitioner contends that a person having ordinary skill in the art "would have had at least a four-year degree in mechanical engineering or a closely related field and at least two years of experience designing, developing, or operating heavy machinery, including their components and control systems." Pet. 11 (referencing Ex. 1002 (Declaration of Dr. William Singhose) ¶ 22). Petitioner also contends that "[a]dditional education could substitute for professional experience and significant work experience—such as working with, servicing, or operating heavy machinery in the field—could substitute for formal education." *Id.* Other than providing his understanding of the types of information considered in determining the level of ordinary skill, Dr. Singhose does not provide any additional support for this definition. *See* Ex. 1002 ¶¶ 21–22.

2. Patent Owner's Response

Patent Owner contends that the level of ordinary skill in the art is a person having "a Bachelor's degree in mechanical engineering, or a related field, and approximately two years of experience designing or developing heavy machinery, including their components and/or control systems." PO Resp. 11 (referencing Ex. 2030 (Declaration of Dr. Carl Nelson) ¶ 21). Like Dr. Singhose, Dr. Nelson provides his understanding of the types of information considered in determining the level of ordinary skill, but does not provide any additional support for this definition. *See* Ex. 2030 ¶¶ 19–21.

Patent Owner argues that Petitioner

> is incorrect to state that "working with, servicing or operating heavy machinery in the field" can "substitute for formal education" because as Dr. Singhose acknowledged on cross-examination, engineers and designers are required to understand

> failure modes and the internal workings of the heavy machinery, whereas operators "wouldn't have to know or [don't] generally know anything about that."

PO Resp. 5 (referencing Ex. 2039 (Transcript for Dr. Singhose's deposition), 36:12–25) (alteration in original). Patent Owner concludes that "those working with, servicing, or operating heavy machinery are not" persons having ordinary skill in the art. *Id.* (referencing Ex. 2030 ¶¶ 23–24).

3. Petitioner's Reply and Patent Owner's Sur-reply

Petitioner replies that its "level-of-skill includes not only those who develop and design heavy machinery, but also customers and dealers who work with, service, or operate heavy machinery." Pet. Reply 1. Petitioner criticizes Patent Owner's definition, saying that, in the parallel district court litigation, Patent Owner's definition of the level of ordinary skill encompassed customers and dealers. *Id.* (referencing Ex. 1177, 2; Ex. 1176 ¶ 45). Petitioner argues that Patent Owner's witnesses testified that "people other than designers and developers routinely learn about the designs of machines by working on them and through training." *Id.* at 1–2 (referencing Ex. 1160, 31:5–34:10; Ex. 1161, 19:3–15, 20:5–23:2, 33:12–18, 48:11–20; Ex. 2039, 35:7–37:10). Petitioner adds that, in at least one other *inter partes* proceeding, the Board concluded that customers were persons having ordinary skill in the art. *Id.* at 2 (citing *HM Elecs., Inc. v. 3M Innovative Props. Co.*, IPR2015-00482, Paper 35 at 24 (PTAB Apr. 18, 2016)).

Patent Owner responds that it has provided a consistent definition of the level of ordinary skill in the art, and it is Petitioner who has changed its position as to the appropriate level of ordinary skill. PO Sur-reply 26.

4. Analysis and Conclusion – Level of Ordinary Skill

The level of skill in the art is "a prism or lens" through which we view the prior art and the claimed invention. *Okajima v. Bourdeau*, 261 F.3d 1350, 1355 (Fed. Cir. 2001). The person of ordinary skill in the art is a hypothetical person presumed to have known the relevant art at the time of the invention. *In re GPAC Inc.*, 57 F.3d 1573, 1579 (Fed. Cir. 1995). In determining the level of ordinary skill in the art, we may consider certain factors, including the "type of problems encountered in the art; prior art solutions to those problems; rapidity with which innovations are made; sophistication of the technology; and educational level of active workers in the field." *Id.* (internal quotation marks and citation omitted).

The parties' definitions of the level of ordinary skill differ slightly. Both definitions allow for experience to substitute for a formal education or an advanced degree to substitute for experience. Pet. 11; PO Resp. 11. Petitioner's definition also includes a broader experience base—designing, developing, or operating heavy machinery—as compared to Patent Owner's definition, which limits the experience to designing and developing heavy machinery. Pet. 11; PO Resp. 11.

We find, on the complete record, that a person having ordinary skill in the art would have had at least a four-year degree in mechanical engineering or a closely related field and at least two years of experience designing, developing, or operating heavy machinery, including their components and control systems, as Petitioner contends. Pet. 11; Ex. 1002 ¶ 22. The '749 patent Specification is written for a person who understands heavy machinery engineering and operations, as it describes the mechanical components and machine operations at a level of detail that indicates the intended reader understands heavy equipment. *See generally* Ex. 1001. The

prior art of record is also written to a level of detail indicating that it is directed to persons who understand heavy machinery engineering and operations. *See generally* Exs. 1005, 1006, 1007, 1008, 1009, 1010, 1011.

Also, we find that innovation in the field of endeavor of the '749 patent is not rapid, nor overly sophisticated, supporting a finding that experience can substitute for a formal degree. *Compare* Ex. 1009 (providing a patent that issued in 1977 and disclosing a slip-form paver) *with* Ex. 1001 (providing a patent that claims priority to an application filed in 2010, and issued in 2018, and disclosing a slip-form paver).

We credit Dr. Singhose's testimony that, absent significant work experience, such as working with, servicing, or operating heavy machinery in the field, a person having ordinary skill in the art would have a four-year degree in mechanical engineering or a closely related field—testimony based on Dr. Singhose's education and experience. *See* Ex. 1002 ¶¶ 22–23; *see also id.* ¶¶ 8–17 (outlining Dr. Singhose's experience, including experience in teaching students with or seeking a four-year degree in mechanical engineering); Ex. 2030 ¶ 20 (providing that a person having ordinary skill in the art "would have had a four-year degree in mechanical engineering or a related field"). We do not find that Dr. Singhose's testimony that engineers need to understand failure modes and the internal workings of the heavy machinery, and operators do not have such an understanding, sufficiently undermines Petitioner's position that operators with significant experience working with heavy machinery may acquire the necessary knowledge base to substitute for a formal, four-year degree. *Cf.* Ex. 2030 ¶ 21 (Dr. Nelson testifying, with respect to the level of ordinary skill, that "[a]dditional education could substitute for professional experience *or vice versa*" (emphasis added)).

To the extent that Petitioner argues that dealers of heavy machinery would have acquired the requisite experience to be a person having ordinary skill in the art merely by being dealers, we do not agree.[15] We find no persuasive evidence in the record to support a finding that a dealer would perform the types of activities, such as operating or servicing heavy machinery, to qualify as a person having ordinary skill. *See, e.g.*, Ex. 1164 (providing the only evidence from a heavy equipment dealer, and providing no testimony as to the types of experience gained as a dealer).

We do find that customers of heavy equipment, and specifically operators and individuals that maintain heavy equipment, could qualify as persons having ordinary skill in the art, provided they have the requisite education or experience. These individuals would gain experience in designing, developing, or operating heavy machinery, including their components and control systems. *See, e.g.*, Ex. 2039, 35:7–37:10 (Dr. Singhose testifying about similarities in designing and operating heavy machinery); Ex. 2031 ¶ 2 (Mr. Holley testifying that he worked for twenty-two years as a mechanical supervisor for a road construction company, and "was responsible for ensuring that the right paving equipment, with the right paving options, was purchased for road construction projects").

In summary, we find that a person having ordinary skill in the art would have had at least a four-year degree in mechanical engineering or a closely related field and at least two years of experience designing, developing, or operating heavy machinery, including their components and control systems. We also find that additional experience could substitute for

[15] We note that the concept that a dealer of heavy equipment would be a person having ordinary skill in the art was introduced, for the first time, in Petitioner's Reply. *Compare* Pet. 11 *with* Pet. Reply 1.

a formal degree and an advanced degree could substitute for experience. We note that our findings and conclusions presented in this Final Written Decision would not change under either party's definition of the level of ordinary skill.

B. Petitioner's Contentions – CIII as a Printed Publication

With the foundation of the level of ordinary skill in the art of the '749 patent, we now turn to Petitioner's contentions with respect to CIII as a printed publication. Petitioner contends that it "distributed over 100 copies of CIII to over 50 customers." Pet. 23. Petitioner supports this contention with the declaration testimony of its Technical Publications Manager, Shari Simmons. *Id.*; *see* Ex. 1012 (providing Ms. Simmons's testimony); *see also* Exs. 1100–1154 (providing confidential business records showing Petitioner's distribution of the CIII manual to customers).

Ms. Simmons testifies that, from 2004 until the time of her declaration, she has distributed to "dealers and customers operator's manuals and other information that can help them properly and safely operate the machines [Petitioner] sells." Ex. 1012 ¶ 3. Ms. Simmons testifies that the version of CIII provided as Exhibit 1005 "is the version of the operator's manual that [she] personally distributed in the 2005–2007 timeframe." *Id.* ¶ 7. Ms. Simmons testifies as to her standard practice of "send[ing] two operator's manuals to each dealer or customer." *Id.* ¶ 13; *see id.* ¶¶ 9–25 (providing Ms. Simmons's testimony on her recordkeeping process as reflected in Exs. 1100–1154).

Petitioner also contends that "no CIII described in the Simmons declaration or Appendix was subject to a non-disclosure agreement or secrecy obligation." Pet. 24; *see also* Ex. 1012 ¶ 26 ("To my knowledge, none of the [CIII] operator's manuals I shipped were subject to any non-

disclosure agreements or other secrecy obligations."). Petitioner adds that CIII does not "bear any markings suggesting that dissemination was prohibited or restricted. Instead, CIII has a 2002 copyright date and encourages users to contact GOMACO for the latest version of the manual." Pet. 24 (referencing Ex. 1005, 3, 4).

Petitioner also cites to the Federal Circuit's decision in *GoPro, Inc. v. Contour IP Holding LLC*, 908 F.3d 690, 695 (Fed. Cir. 2018), for the proposition that distributing a document intended to reach the general public to dealers with no restrictions satisfies the requisite accessibility of the document. Pet. 23.

C. Patent Owner's Response – CIII as a Printed Publication

Patent Owner responds that the high price point for the machine accompanied by the CIII manual "effectively put *CIII* beyond of the reach of interested members of the public." PO Resp. 3 (referencing Ex. 2038, 2, which "list[s] a base price of $229,675 with optional equipment add-ons significantly increasing the price"). Patent Owner argues that "[t]his prohibitively expensive price tag renders CIII itself beyond the reach of all but the wealthiest individuals, excluding nearly all 'persons interested and ordinarily skilled in the subject matter or art, exercising reasonable diligence.'" *Id.* (quoting *Acceleration Bay*, 908 F.3d at 772). Patent Owner adds that Petitioner "has not attempted to demonstrate that . . . any such 'persons' would have found it reasonable to pay nearly $230,000 for access to *CIII*." *Id.*; *see id.* at 4 (identifying *AMS IP Holding B.V. v. Kokusai Elec. Corp.*, IPR2019-00369, Paper 8 at 16–18 (PTAB June 27, 2019) and *Halliburton Energy Servs., Inc. v. Dynamic 3D Geosolutions LLC*, IPR2014-01186, Paper 18 at 6 (PTAB Feb. 18, 2015) as Board decisions that found a

high product price point weighed against finding the subject reference accessible).

Next, Patent Owner argues that those individuals that actually received CIII are not members of the interested public, as they are persons that operate heavy machinery such as the CIII machine, not persons who design or build such machines. PO Resp. 4–5.

Next, Patent Owner argues that CIII "was not made available to the public," meaning non-customers. PO Resp. 5. Patent Owner again directs us to the Board decision in *AMS IP Holding*, where the panel "determined that a product manual provided to customers along with the purchase of a corresponding product was ***not*** publicly accessible because, the petitioner failed to show that the product manual itself was available to an audience that includes 'at least the public interested in the art,' such as noncustomers." *Id.* at 6 (citing *AMS IP Holding B.V.*, IPR2019-00369, Paper 8 at 16–17). Patent Owner adds that Ms. Simmons testified that it was not GOMACO's practice to provide non-customers with CIII. *Id.*

Patent Owner distinguishes *GoPro*, because the reference at issue in that proceeding was made accessible to the general public, including "actual and potential dealers, retailers, and customers." PO Resp. 6 (quoting *GoPro, Inc.*, 908 F.3d at 695).

D. Petitioner's Reply and Patent Owner's Sur-reply

Petitioner replies that Patent Owner does not dispute that over 100 copies of CIII were distributed to customers and dealers as part of GOMACO's routine business operations. Pet. Reply 2; *see also id.* at 4–6 (discussing how dealers and customers received CIII). Petitioner repeats that CIII has a 2002 copyright date and does not include any confidentiality designation or restrictions on dissemination—facts that provide indicia of

accessibility. *Id.* at 2–3 (citing Federal Circuit and Board decisions in support). Petitioner argues that the "Federal Circuit and Board routinely rule that documents are publicly accessible when distributed with commercial products." *Id.* at 3.

Petitioner argues that "[t]he fundamental nature and purpose of *CIII*—an operator/service manual with detailed descriptions of machine features *that is meant for dissemination to customers*—further supports a public-accessibility finding." Pet. Reply 3–4 (citing *Nobel Biocare Servs. AG v. Instradent USA, Inc*., 903 F.3d 1365, 1377 (Fed. Cir. 2018), and *Kyocera Wireless Corp. v. ITC*, 545 F.3d 1340, 1351 (Fed. Cir. 2008)).

Petitioner contends that "[d]ealers often keep product manuals and distribute them to noncustomers and potential customers who requested them." Pet. Reply 6. Petitioner explains that one such dealer, Mr. Andy Bazan, testified that it was his practice to retain copies of manuals, including CIII, and he would provide copies to any person, including non-customers, who requested one. *Id.* at 6–7 (referencing Ex. 1164 ¶ 6).

Patent Owner replies that Petitioner relies on dissemination of CIII to customers and dealers and these individuals are not persons having ordinary skill in the art. PO Sur-reply 25. Patent Owner argues that Petitioner never establishes that any of the persons that actually received CIII possessed the requisite level of ordinary skill. *Id.* at 25–26. With respect to Mr. Bazan's testimony, Patent Owner argues that no person having ordinary skill in the art would have had reason to know that Mr. Bazan was a source of CIII. *Id.* at 26–27.

E. Analysis and Conclusion – CIII as a Printed Publication

The determination of whether a reference is a "printed publication" "involves a case-by-case inquiry into the facts and circumstances

surrounding the reference's disclosure to members of the public." *In re Klopfenstein*, 380 F.3d 1345, 1350 (Fed. Cir. 2004). Whether a document qualifies as a printed publication is a legal conclusion based on underlying factual determinations. *Medtronic, Inc. v. Barry*, 891 F.3d 1368, 1380 (Fed. Cir. 2018).

"Because there are many ways in which a reference may be disseminated to the interested public, 'public accessibility' has been called the touchstone in determining whether a reference constitutes a 'printed publication.'" *Jazz Pharm., Inc.* 895 F.3d at 1355 (quoting *In re Hall*, 781 F.2d 897, 898–99 (Fed. Cir. 1986)). A reference is considered publicly accessible if it was "disseminated or otherwise made available to the extent that persons interested and ordinarily skilled in the subject matter or art, exercising reasonable diligence, can locate it.'" *Id.* at 1355–56 (quoting *In re Wyer*, 655 F.2d 221, 226 (CCPA 1981)).

For the reasons below, we find that CIII qualifies as a printed publication. First, we find that the CIII reference itself provides indicia of accessibility. CIII includes a copyright date and includes contact information for GOMACO. Ex. 1005, 3. CIII is an "Operator and Service Manual," and, as such, is publicly disseminated to at least individuals that operate or service the Commander III Paver, similar to manuals supplied with a new automobile. *See, e.g.*, *id.* at 4 ("[The manual] contains detailed descriptions and instructions for the efficient operation and maintenance of your Commander III."). The manual itself has no confidentiality designation nor any restrictions on distributing the manual. Also, CIII does not indicate that it is a "draft," which, if it had such a designation, may suggest that GOMACO did not intend for its distribution. *Cf. Nobel Biocare Servs. AG v. Instradent U.S., Inc.*, 903 F.3d 1365, 1377 (Fed. Cir. 2018) (determining

that the product catalog at issue in the case "is the type of document intended for public dissemination, and it bears no designations, such as 'draft' or 'confidential,' that might suggest that it was not intended for public distribution").

Second, we find that it is undisputed that CIII was actually disseminated to customers and dealers who purchased a Commander III paver. We credit Ms. Simmons's testimony and accompanying exhibits demonstrating actual dissemination. *See* Ex. 1012. We credit this testimony, in part, based on the consistency between Ms. Simmons's declaration and deposition testimony. *See generally* Exs. 1012, 2041. Ms. Simmons's testimony is also supported, in part, by Mr. Bazan's testimony. *See* Ex. 1164 ¶ 5 ("With each Commander III machine, I received the Commander III Operator/Service Manual.").

Third, we find the nature of the type of equipment to which CIII pertains supports a finding of accessibility to the interested public. Paver machines, such as the Commander III Paver, are used in plain sight of the public. *See, e.g.*, Ex. 2001, 6 (depicting a paver slipforming a section of interstate highway); Ex. 2008, 8 (depicting a Commander IIIx operating along a roadway and in front of buildings). In this way, a person having a four-year degree in mechanical engineering and two years of experience designing and developing heavy machinery (that is, Patent Owner's more narrow definition) would be able to see the machines in operation. Such individuals, upon seeing these machines *and using reasonable diligence*, would be able to locate a manual for the machines, such as CIII. *See, e.g.*, Ex. 1161, 37:5–8 ("Q. When you buy a slipform paver, is it customary to get product manuals with those pavers? A. Product manuals, yes. In the way of a very rudimentary service manual and setup manual."). And, because CIII

has no restrictions on its distribution, these individuals could access CIII. *Cf. GoPro, Inc.*, 908 F.3d at 695 (concluding that the GoPro Catalog had no restrictions on dissemination, such that interested members of the relevant public could access the catalog using reasonable diligence). That is, a member of the interested public, employing reasonable diligence, could locate a company that uses the equipment and, because the manual does not have any restrictions on distribution, get a copy of the manual. *See* Ex. 1161, 37:5–8.

Similarly, these types of machines are sold through dealers. *See, e.g.*, Ex. 1164 ¶¶ 2, 6 (indicating that "Finkbiner is a dealer of heavy construction equipment, including . . . paving and milling machines," and that "[i]t was . . . my typical practice to keep a copy of manuals so that I can reference them in the event a customer or I have questions about the design, operation, or maintenance of a machine"); Ex. 1161, 15:14–16 (indicating that Mr. Greenwood's company bought some heavy machinery through dealers). We find that interested members of the relevant public, *exercising reasonable diligence*, would have been able to locate such dealers and inquire about obtaining a manual. The evidence of record demonstrates that one such dealer would provide a copy of CIII to "a current customer, potential customer, or anyone else for that matter [that] requested a copy of the Commander III Operator/Service Manual." Ex. 1164 ¶ 6.

Because we find that persons having ordinary skill in the art, even as that person is more narrowly defined by Patent Owner (that is, encompassing persons having experience in designing or developing heavy machinery, but not those merely with experience in operating or servicing such machines) would have been able to publicly access CIII, our conclusion of public accessibility would not change under either party's definition of

the level of ordinary skill. That is, our conclusion of public accessibility of CIII does not depend on the actual dissemination of the manual to customers. We find, independent of this actual dissemination, a person having ordinary skill in the art, exercising reasonable diligence, could have accessed CIII prior to the earliest filing date of the '749 patent, by locating a dealer or user of the underlying machine, and requesting a copy. *See, e.g.*, Ex. 1012 ¶¶ 3, 13; Ex. 1164 ¶ 6. The lack of any restrictions on disseminating the manual supports a finding that this approach would have been successful. *See, e.g.*, Ex. 1012 ¶¶ 3, 26; Ex. 1164 ¶ 6.

We have reviewed Patent Owner's arguments, but find that they do not identify a deficiency in Petitioner's position of public accessibility. As to the high cost of the Commander III paver, although this fact weighs somewhat against a finding of public accessibility, we find that the evidence we discuss above outweighs this cost evidence. Also, as we discuss above, we find that a person having ordinary skill in the art, *even a non-customer*, exercising reasonable diligence, could publicly access CIII, even if GOMACO did not directly provide CIII to non-customers. *See, e.g.*, Ex. 1012 ¶¶ 3, 26; Ex. 1164 ¶ 6. Significant to that finding is the lack of restrictions on disseminating the manual, and the visible nature of the underlying machine itself. Ex. 1012 ¶¶ 3, 26; Ex. 1164 ¶ 6.

Also, Patent Owner's arguments that Petitioner failed to identify any designer or developer of heavy machinery who actually received CIII is unavailing. PO Resp. 4. "If accessibility is proved, there is no requirement to show that particular members of the public actually received the information." *Constant v. Advanced Micro-Devices, Inc.*, 848 F.2d 1560, 1569 (Fed. Cir. 1988).

Although we agree with Patent Owner that the record does not include evidence that a person having ordinary skill in the art would have known that he or she could obtain a copy of CIII from Mr. Bazan, significant in our weighing of the totality of evidence is that such a person, exercising reasonable diligence, could have identified Mr. Bazan as a dealer of the Commander III paver, and, as such, knowledge and accessibility of the manual would flow from that identification. Ex. 1164 ¶ 6.

Patent Owner's reliance on the non-precedential Board decision in *AMS IP Holding* is unavailing, as the facts in that case are distinguishable from the facts of the present proceeding. PO Resp. 4–6. Significantly, the product manual at issue in *AMS IP Holding* included a statement requiring "express written permission" from the product provider to reproduce and transmit the manual, a fact that weighed against public accessibility. *AMS IP Holding B.V.*, IPR2019-00369, Paper 8 at 19. Here, CIII has no restrictions on disseminating the manual. The panel in *AMS IP Holding* also found that knowledge of the product in that case did not necessarily translate to knowledge of the manual. *Id.* at 20. Here, we find that the very nature of CIII supports a finding that a person having ordinary skill in the art, knowing of the underlying heavy machine, would know that such a machine would have an operator and service manual. *See, e.g.*, Ex. 1012 ¶ 13 (indicating that it was "standard practice" to send manuals with machines); Ex. 1005, 4 (stating that a customer should "read the instructions in [CIII] thoroughly" to keep the Commander III pave "running efficiently"); Ex. 1161, 37:5–38:1 (indicating that operating manuals came with heavy machinery).

In summary, we find, that interested members of the relevant public (including non-customers), exercising reasonable diligence, would have

been able to publicly access CIII, given the absence of any dissemination restrictions, and the general nature of the document (an operator's and service manual) and the public nature of the underlying machine and its avenues of availability.

III. UNPATENTABILITY ANALYSIS

A. Applicable Law

In *inter partes* reviews, a petitioner bears the burden of proving unpatentability of the challenged claims, and the burden of persuasion never shifts to the patent owner. *Dynamic Drinkware, LLC v. Nat'l Graphics, Inc.*, 800 F.3d 1375, 1378 (Fed. Cir. 2015). To prevail in this proceeding, Petitioner must support its challenge by a preponderance of the evidence. 35 U.S.C. § 316(e); 37 C.F.R. § 42.1(d) (2021). Accordingly, all of our findings and conclusions are based on a preponderance of the evidence standard.

Petitioner's asserted grounds of unpatentability are based on obviousness under 35 U.S.C. § 103.

> Section 103(a) forbids issuance of a patent when "the differences between the subject matter sought to be patented and the prior art are such that the subject matter as a whole would have been obvious at the time the invention was made to a person having ordinary skill in the art to which said subject matter pertains."

KSR Int'l Co. v. Teleflex Inc., 550 U.S. 398, 406 (2007). The question of obviousness is resolved on the basis of underlying factual determinations, including: (1) the scope and content of the prior art; (2) any differences between the claimed subject matter and the prior art; (3) the level of ordinary

skill in the art[16]; and (4) when available, objective evidence, such as commercial success, long felt but unsolved needs, and failure of others. *Graham v. John Deere Co.*, 383 U.S. 1, 17–18 (1966).

"[O]bviousness must be determined in light of *all the facts*, and . . . a given course of action often has simultaneous advantages and disadvantages, and this does not necessarily obviate motivation to combine" teachings from multiple references. *Medichem, S.A. v. Rolabo, S.L.*, 437 F.3d 1157, 1165 (Fed. Cir. 2006) (emphasis added); *see also PAR Pharm., Inc. v. TWI Pharms., Inc.*, 773 F.3d 1186, 1196 (Fed. Cir. 2014) ("The presence or absence of a motivation to combine references in an obviousness determination is a pure question of fact.").

Notwithstanding what the teachings of the prior art would have suggested to one with ordinary skill in the art at the time of the patent's invention, the totality of the evidence submitted, including objective evidence of nonobviousness, may lead to a conclusion that the challenged claims would not have been obvious to one with ordinary skill in the art. *In re Piasecki*, 745 F.2d 1468, 1471–72 (Fed. Cir. 1984). Objective evidence of nonobviousness, so called "secondary considerations," may include long-felt but unsolved need, failure of others, unexpected results, commercial success, copying, licensing, and praise. *See Graham*, 383 U.S. at 17–18; *Leapfrog Enters., Inc. v. Fisher–Price, Inc.*, 485 F.3d 1157, 1162 (Fed. Cir. 2007).

[16] We address the level of ordinary skill above, in Section II.A, in connection with our analysis of CIII as a printed publication.

B. Claim Construction

In *inter partes* reviews, we interpret a claim "using the same claim construction standard that would be used to construe the claim in a civil action under 35 U.S.C. 282(b)." 37 C.F.R. § 42.100(b) (2021). Under this standard, we construe the claim "in accordance with the ordinary and customary meaning of such claim as understood by one of ordinary skill in the art and the prosecution history pertaining to the patent." *Id.*

Petitioner contends that we need not resolve any claim construction disputes between the parties as the asserted prior art discloses the claimed subject matter under either party's constructions. Pet. 11–12. Patent Owner provides express constructions for two terms: "a power drive between the jacking column and the crawler track," and "a rotary connection between the jacking column and the crawler track." PO Resp. 12–17. We address these two terms, and an additional claim construction—whether the independent claims of the '749 patent are limited to "on-the-fly steering"—below.

1. "a power drive between the jacking column and the crawler track"

In our Decision on Institution, we construed the term "a power drive between the jacking column and the crawler track" to mean "a power drive physically between the jacking column and the crawler track." Dec. on Inst. 23–26. Patent Owner asserts the same construction in its Patent Owner Response. PO Resp. 12–15. Petitioner also adopts this construction. *See, e.g.*, Tr. 18:6–11 ("[T]he institution [decision] has concluded that a physical definition of 'between' applies. So from that point on, after we filed our Petition and the reply brief and today, we apply the 'physically between' construction only.").

On the complete trial record before us, we see no reason to modify our construction of the term "a power drive between the jacking column and the crawler track" from the construction provided in the Decision in Institution.[17]

2. "a rotary connection between the jacking column and the crawler track"

Patent Owner contends that we should construe the term "a rotary connection between the jacking column and the crawler track" to mean "a component that can rotate which is physically located between the jacking column and the crawler track." PO Resp. 15–17. Specifically, Patent Owner argues that we should reject Petitioner's interpretation of this claim term, which encompasses the situation where "'the crawler track rotates in unison with some components of the jacking column but relative to other components that do not rotate because they are fixed (e.g. the outer cylinder),' because it rewrites the plain language of the claims." *Id.* at 16 (referencing Pet. 43–44 n.11).

Petitioner replies that its "proposed obvious combination results in a design where the power drive and rotary connection are physically between the jacking column and the crawler track, satisfying [Patent Owner's] constructions." Pet. Reply 9. We determine that we need not expressly construe this term to resolve the parties' disputes. *See Realtime Data, LLC v. Iancu*, 912 F.3d 1368, 1375 (Fed. Cir. 2019) ("The Board is required to construe 'only those terms that . . . are in controversy, and only to the extent

[17] The Decision on Institution provides our complete analysis of the construction of the claim term "a power drive between the jacking column and the crawler track." Dec. on Inst. 23–26.

necessary to resolve the controversy.'") (quoting *Vivid Techs., Inc. v. Am. Sci. & Eng'g, Inc.*, 200 F.3d 795, 803 (Fed. Cir. 1999)).

3. On-the-fly steering

In addressing patentability issues, including objective indicia of non-obviousness, the parties seem to dispute whether the Challenged Claims are limited to "on-the-fly steering," that is, the situation where a crawler track is rotated when the track is in contact with the ground. *See, e.g.*, Tr. 42:8–9 (Patent Owner's counsel arguing "[t]hat's what the patent gives you. 90-degree steering on the fly."), 52:10–53:10 (Patent Owner's counsel arguing that jacking up the crawler track off the ground to rotate it is not within the scope of claim 1), 60:22–61:17 (Petitioner's counsel arguing that patent claims do not cover only on-the-fly steering, but also encompass an embodiment where a crawler track is lifted off the ground and rotated). For the reasons discussed below, we construe the independent claims to be sufficiently broad to encompass both an embodiment where the crawler track is rotated when the track is in contact with the ground and an embodiment where the crawler track is lifted off the ground and rotated.

As an initial point, we note that neither party offers an express construction of any terms in the Challenged Claims that would limit the claims to an embodiment where the crawler track is rotated when the crawler track is in contact with the ground. Petitioner does argue that on-the-fly steering is not a claimed feature. Pet. Reply 17 (referencing Ex. 1157, 54:15–59:3; Ex. 1001, 6:52–60, 10:64–11:1). Patent Owner replies that its reliance on on-the-fly steering is directed to secondary considerations. PO Sur-reply 14–15.

We start with the claim language at issue. *TQ Delta, LLC v. DISH Network LLC*, 929 F.3d 1350, 1357 (Fed. Cir. 2019). Independent claim 1

recites elements of a swing leg assembly and independent claim 17 recites a paving machine with two or more swing leg assemblies, with each assembly having the same limitations as the swing leg assembly recited in claim 1. *Compare* Ex. 1001, 22:40–67 (claim 1) *with id.* at 23:54–24:33 (claim 17). The plain language of these claims would encompass a swing leg assembly that rotates a crawler track when the crawler track is in contact with the ground, but we discern nothing in the claim that limits the claim to such an embodiment. Nor do we discern anything in the dependent claims that informs a construction of the independent claims that would so limit the scope of the independent claims to on-the-fly steering. *Cf.* Ex. 1157, 57:8–13 (Dr. Nelson testifying that, "I finished the claims of the '749 patent, and likewise did not see anything that specifically says that the crawler track has to be on or off the ground, except that there is implicit functionality described in these claims that has to do with the steering.").

At oral hearing, Patent Owner's counsel directed us to the claim limitations reciting the angular position transducers, crawler track, power drive, and processor as the limitations that limit the scope of the claims to on-the-fly steering. Tr. 48:13–49:9. We discern nothing in the language of the claims, however, that would prevent these components from properly orienting the crawler track when the crawler track is lifted off the ground by a jacking column.

We turn now to the Specification, which "is the single best guide to the meaning of a disputed term." *Phillips v. AWH Corp.*, 415 F.3d 1303, 1315 (Fed. Cir. 2005) (en banc). The Specification supports a conclusion that the claims encompass an embodiment where the crawler track is rotated when the track is in contact with the ground, and an embodiment where the crawler track is lifted off the ground and rotated. For example, in the Brief

Summary of the Invention, the Specification states that the configuration of angular transducers, processor, and power drive can position the crawler track "when the machine is walked forward or backward" (on-the-fly steering) or "when the machine is stationary . . . [by] lifting each crawler track (one at a time) off the ground, and thereafter using the . . . position transducer working in conjunction with the power drive . . . for moving the crawler track to another position." Ex. 1001, 6:48–60.

The Specification also discloses that the feedback loop arrangement, which includes the angular transducers, processor, and power drive, "automatically adjusts the angular orientation of the crawler tracks so that the tracks remain oriented in the travel direction without any need to stop operation of the machine *or* manually adjust the orientation of the tracks and/or the swing legs." Ex. 1001, 12:60–64 (emphasis added). That is, the feedback loop allows for changing the angular orientation of a crawler track without stopping operations (on-the-fly steering) *or* allows for adjusting the crawler track without the type of manual efforts previously required to reorient a crawler track when the track is off the ground. *Cf. id.* at 1:23–5:56 (discussing the Background of the Invention, including the manual efforts required to reorient a crawler track when the crawler track was lifted off the ground using the jacking column); PO Sur-reply 1 ("Before [Patent Owner]'s invention . . . , it took an entire work-shift and many man hours to reposition the swing legs and crawler tracks on the prevailing slipform paver design. [The] invention made this costly downtime negligible *and* introduced *other* new benefits, like on-the-fly 90-degree steering." (emphasis added)).

In summary, we construe the independent claims to encompass both an embodiment where the crawler track is rotated when the track is in

contact with the ground and an embodiment where the crawler track is lifted off the ground and rotated.

4. Additional terms

We determine that we need not expressly construe any other claim terms to resolve the parties' disputes on the current record. *See Realtime Data, LLC*, 912 F.3d at 1375.

C. Ground 1: Claims 1–11, 13–17, 19, and 20 as unpatentable over CIII and Rio

Petitioner contends that claims 1–11, 13–17, 19, and 20 are unpatentable over CIII and Rio. Pet. 5. We first address Petitioner's reasons for combining CIII and Rio, then address Petitioner's contentions with respect to how the combined teachings of CIII and Rio render claims 1–11, 13–17, 19, and 20 obvious.

1. Reasons for combining CIII and Rio and reasonable expectation of success

As described above, CIII discloses a slipform paver with a hydraulic steering cylinder (a "smart steer cylinder") that rotates a crawler track positioned below a jacking column, and a hydraulic pivot cylinder that swings a swing leg assembly. *See* Pet. 12–19. Petitioner proposes to modify CIII by replacing the hydraulic steering cylinder with a rotary actuator as disclosed in Rio. *See, e.g.*, *id.* at 29. Petitioner also proposes to include Rio's control system. *See, e.g.*, *id.* at 32–33.

Petitioner contends that a person having ordinary skill in the art would have found it "obvious to use Rio's rotary actuator instead of CIII's steering cylinder to rotate the crawler track and to incorporate Rio's teaching of a control system that maintains the track in a desired orientation as the swing leg pivots." Pet. 28.

a) Petitioner's contentions with respect to motivation to combine

As a threshold point, Petitioner contends that CIII and Rio are analogous art, as both references are in the same field of endeavor as the '749 patent—both references "describe swing-leg assemblies for road-construction machines." Pet. 28 (referencing Ex. 1002 ¶¶ 44–47, Ex. 1005, 3-17–18, Ex. 1006, Fig. 2).

Petitioner contends that both references "disclose a sensor that measures the angular position of the crawler tracks and a controller that rotates the crawler tracks based on the receipt of multiple signals." Pet. 28 (referencing Ex. 1005, 8-105–06; Ex. 1006, 6:6–11, 8:39–47; Ex. 1002 ¶ 47). Petitioner reasons that "[c]ombining aspects of [CIII's and Rio's] swing-leg assemblies would have involved substituting one known element for another according to known methods to yield predictable results." *Id.* (referencing Ex. 1002 ¶ 47). Petitioner adds that Rio addresses the same problem as the '749 patent—manually repositioning swing leg assemblies on road machines. *Id.* at 28–29; *see also* Ex. 1002 ¶ 46 (Dr. Singhose declaring that Rio is reasonably pertinent to the problem that the '749 patent attempts to solve—eliminating the "time-consuming, costly" process of positioning a swing leg and crawler track).

Petitioner contends that a person having ordinary skill in the art would have been motivated to combine the teachings of CIII and Rio and, specifically, replace CIII's steering cylinder with Rio's rotary actuator. Pet. 29 (referencing Ex. 1002 ¶ 48). Petitioner contends that a rotary actuator would provide CIII's crawler track with a greater range of motion. *Id.* (referencing Ex. 1009[18], 2:51–53, 7:36–60, Fig. 7; Ex. 1002 ¶ 48).

[18] Miller et al., US 4,029,165, issued June 14, 1977 (Ex. 1009, "Miller").

Petitioner explains that "[g]reater range of motion leads to greater maneuverability of the paver, faster adjustments in crawler-track position, and fewer risks to the safety of the operators." *Id.* (referencing Ex. 1002 ¶ 48). Petitioner adds that a person having ordinary skill in the art "would have further been motivated to implement Rio's rotary actuator to provide 'a compact apparatus' with high torque that achieves 'fine rotary steering control' and provides 'rotary motion without the need for complicated and bulky linkages.'" *Id.* (referencing Ex. 1006, 4:66–5:7; Ex. 1002 ¶ 48). As Petitioner and Dr. Singhose explain, CIII's steering cylinder is an example of a steering system with bulky linkages, for which Rio offers a solution. *Id.*; Ex. 1002 ¶ 48. Dr. Singhose declares that "[c]ombining aspects of [CIII's and Rio's] swing leg assemblies would have involved substituting one known element for another according to known methods to yield predictable results." Ex. 1002 ¶ 47.

Relevant to our decision here, Petitioner contends that a person having ordinary skill in the art "would have known to mount Rio's rotary actuator 44 at the bottom of CIII's jacking column." Pet. 30 (referencing Ex. 1006, 5:8–11; Ex. 1002 ¶¶ 52–55). Petitioner bases this contention, at least in part, on Rio's disclosure that "[i]n another of the preferred embodiments [that is, an embodiment where the second actuator is not positioned at the top of the lifting column], the second actuator 44 is positioned on lifting column 46 at a location spaced apart from the first actuator 42 along the lifting column axis 48." Ex. 1006, 5:8–11. Dr. Singhose declares that CIII's hydraulic pivot cylinder is not attached to CIII's jacking column, such that it would not interfere with a rotary actuator positioned anywhere along the vertical axis of the jacking column. Ex. 1002 ¶ 52. Dr. Singhose adds that CIII's steering cylinder attaches near the bottom of the jacking column. *Id.*

Petitioner also contends that positioning Rio's rotary actuator at the bottom of CIII's jacking column would simplify the jacking column's design, "as the guide tubes would no longer need to rotate relative to the outer cylinder." Pet. 30; *see also* Ex. 1002 ¶¶ 53–55 (explaining how CIII's jacking column could be modified so that the guide tubes would no longer need to rotate and that only the crawler track would rotate). Petitioner adds that "it was well known to position a rotary power drive at the bottom of a jacking column and use it to rotate a crawler track," relying on Littman, Miller, and Johns[19] in support. Pet. 30–31 (referencing Ex. 1007, 5:14–59, Figs, 4, 5; Ex. 1009, 7:35–58, Fig. 7; Ex. 1011 ¶ 20, Fig. 2).

Petitioner contends that a person having ordinary skill in the art would have sought a solution to CIII's "time-consuming manual adjustments for repositioning the swing legs and crawler tracks." Pet. 31. Petitioner contends that Rio solves this issue through its control system. *Id.* at 32. Petitioner contends that a person having ordinary skill in the art "would have been motivated to implement Rio's rotation sensor 75, pivot sensor 83, and control system in the CIII machine to automate rotation of the swing leg and the crawler track." *Id.* (referencing Ex. 1002 ¶ 60). Petitioner contends that CIII discloses a feedback system similar to Rio and that a person having ordinary skill in the art "would have thus found it obvious to use the feedback system described in Rio to simultaneously control rotation of the swing legs and crawler tracks in the CIII machine." *Id.* (referencing Ex. 1002 ¶ 60).

[19] Johns, US Pub. 2003/0173130 A1, published September 18, 2003 (Ex. 1011, "Johns").

Petitioner contends that, with the modification that adds Rio's rotary actuator, a person having ordinary skill in the art "would have found it obvious to implement Rio's rotation sensor between the jacking column and crawler track to measure the rotation of the crawler track relative to the jacking column." Pet. 32 (referencing Ex. 1006, 6:6–9; Ex. 1002 ¶ 61). Petitioner concludes that the modification "would have been a routine substitution of one known sensor for another—CIII already discloses using a sensor (i.e., CIII's feedback pot) to measure rotation of the crawler track relative to the outer cylinder of the jacking column." *Id.* at 32–33. Petitioner adds that "it was well known to position a rotation sensor at the bottom of a jacking column and use it to sense rotation of the crawler track." *Id.* at 33 (referencing Ex. 1007, 5:34–42, 6:12–26, Figs. 4–6; Ex. 1009, 12:23–46; Ex. 1011 ¶ 21; Ex. 1002 ¶ 61).

Petitioner also contends that a person having ordinary skill in the art would have known from Rio's teachings "to implement pivot sensor 83 either as a rotary encoder associated with the shaft about which CIII's swing leg pivots or as a linear sensor associated with the hydraulic actuator for pivoting the swing leg." Pet. 33 (referencing Ex. 1006, 6:22–26; Ex. 1005, 3-17, 3-23; Ex. 1002 ¶ 61). Petitioner explains that these sensors "would allow CIII's controller to determine the angle of the crawler tracks relative to the frame regardless of the location of the swing leg." *Id.* (referencing Ex. 1006, 8:31–59, 9:15–21; Ex. 1005, 8-105–06; Ex. 1002 ¶ 61).

Petitioner contends that a person having ordinary skill in the art "would have known that implementing Rio's sensors and control system in CIII would allow an operator to pivot the swing leg with a hydraulic actuator or other known mechanism such as Rio's rotary or linear actuator." Pet. 33. Petitioner adds that such an implementation would "automatically orient the

associated crawler track in the paving direction or another desired direction without needing to rotate the swing leg and crawler track in separate steps or recalibrate the crawler tracks." *Id.* at 34 (referencing Ex. 1005, 2-6, 3-17–18; Ex. 1006, 4:40–44; Ex. 1002 ¶ 62).

Patent Owner does not directly address the reasoning with respect to Rio's control system. *See* PO Resp. We address Patent Owner's arguments in relation to the state-of-the-art evidence and reasonable expectation of success, below. We address Patent Owner's arguments with respect to Petitioner's contentions directed to positioning Rio's actuator at the bottom of CIII's jacking column, between the column and crawler track below, in connection with our analysis of the "power drive" limitation of claim 1.

b) The state-of-the-art evidence

Petitioner contends that rotary actuators located above a wheel or crawler track were well known in the art, including Rio, Littman, Miller, and Johns. Pet. 29–30 (referencing Ex. 1007, 3:31–5:52; Ex. 1009, 2:51–53, 7:36–60, Fig. 7; Ex. 1011 ¶ 20, Fig. 2; Ex. 1002 ¶¶ 49–50); *see also* Tr. 23:4–27:6 (discussing state-of-the-art evidence, which Petitioner's counsel characterizes as "some of the most compelling evidence showing why the rotary actuator in Rio would -- why a person of skill in the art would know to interpret those disclosures that you could put it at the bottom").

For example, as summarized above in Section I.F.4, Littman discloses "a prime mover having a plurality of elongated, segmented legs with individual steerable drive means on each so as to enable the prime mover to be easily moved to and positioned properly in a wide variety of environments and terrains." Ex. 1007, 1:6–10. We reproduce an annotated version of Littman's Figure 5, from the Petition, below.

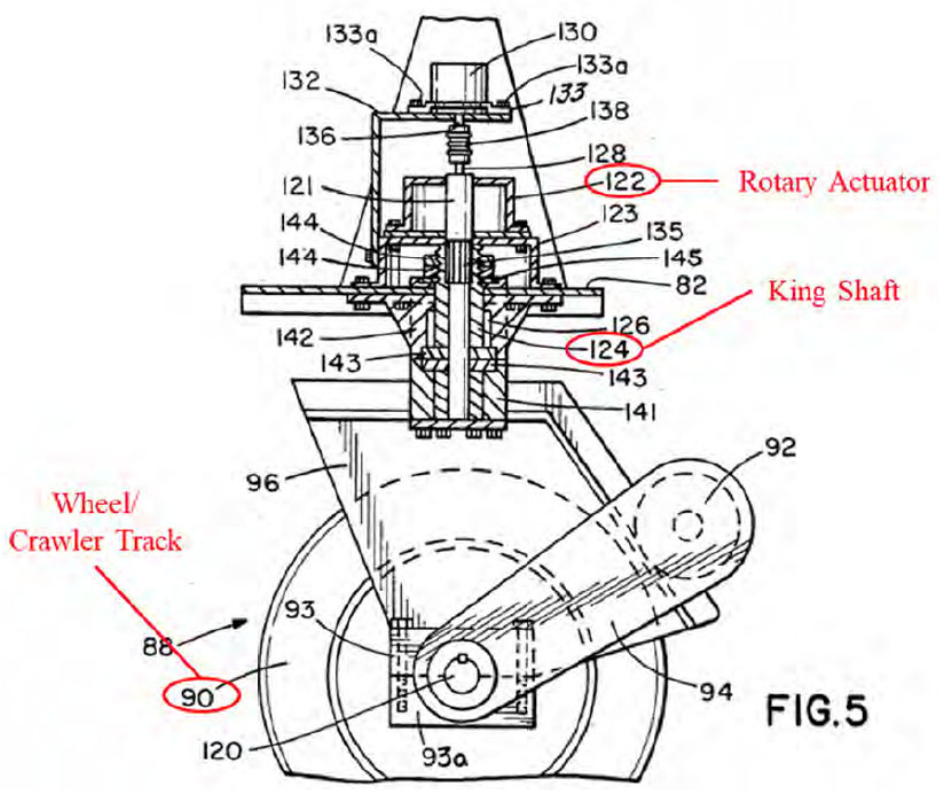

Pet. 87. Figure 5 depicts "a cross-sectional detail view of a drive means taken generally along the line 5-5 of" Figure 2. Ex. 1007, 2:28–29. "The rotating power furnished by the rotary actuator 122 . . . [is] transmitted through the king pin 124 to steer the wheels [or crawler track] 90." *Id.* at 4:19–21, 5:50–52.

In another example, Miller discloses a paver with a rotary steering housing located above a crawler track. Ex. 1009, 7:35–53, Figs. 1, 7. We reproduce Miller's Figure 14, as annotated in the Petition, below.

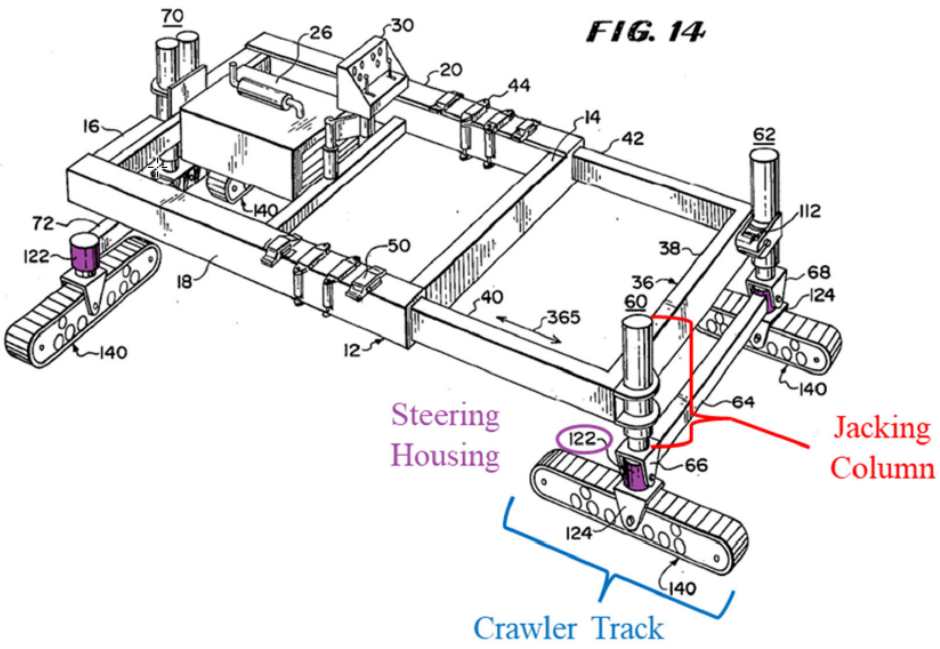

Pet. Reply 16. Figure 14 depicts Miller's paver in an extracted orientation. Ex. 1009, 9:65–67. Of interest here is steering housing 122, which is located just above the crawler track. *See also id.* at Fig. 7 (depicting details of steering housing 122). We reproduce Miller's Figure 7, below.

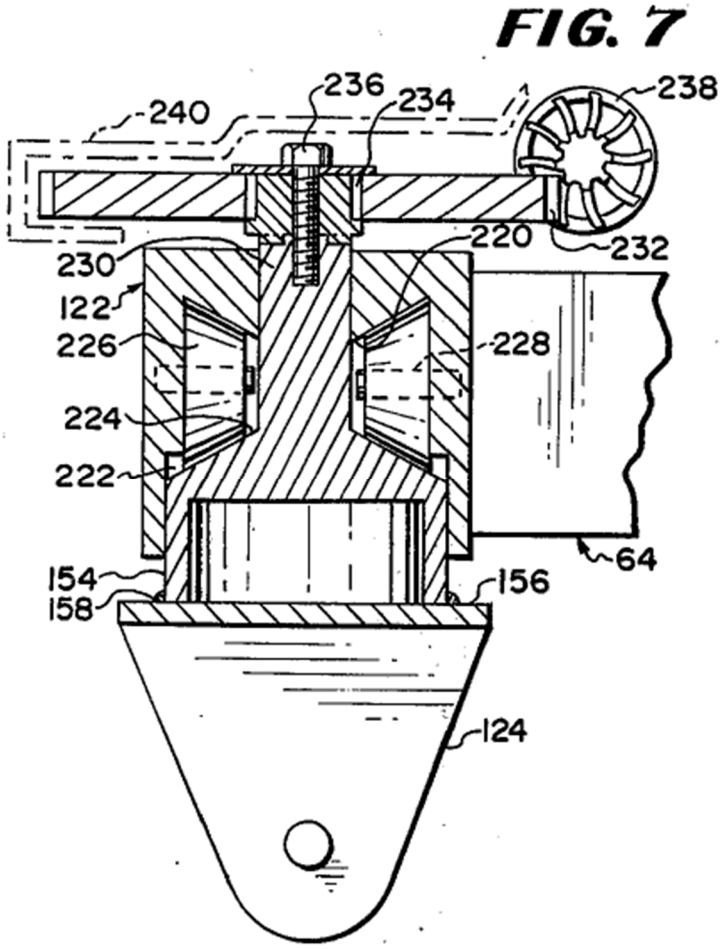

Figure 7 depicts "a cross-sectional view of a spindle-mount above a bogey-mount for a ground engagement means and a pinion gear assembly for 360° steering." Ex. 1009, 2:51–53. Steering housing 122 includes conical bearing surfaces 220 within base 154, which is attached to bogey-mount 124. *Id.* at 7:37–42. Base 154 includes conical bearing surface 224 to contain tapered roller bearings 226. *Id.* at 7:42–45. Driven gear 232 is driven by drive pinion gear 238, with a drive motor, mounted walking beam 64, driving pinion gear 238. *Id.* at 7:46–51. Figure 7 depicts components of a rotary actuator positioned physically between the crawler track and jacking column.

Johns discloses a remote operated work machine for construction and demolition with four wheels, each driven by a rotary actuator located just above the wheel. Ex. 1011 ¶¶ 2, 18, 20; *see also id.* at Fig. 2 (illustrating a wheel 32 with slew drive 42).

Patent Owner argues that Littman's disclosed machine is "far afield" of a slipform paver and "fails to disclose an upright jacking column." PO Resp. 33. Patent Owner adds that Littman's rotary actuator is not physically located between a jacking column and crawler track, because "the rotary actuator is located fully within what [Petitioner] refers to as the jacking column." *Id.* Patent Owner argues that Littman's rotary actuator is supported by outer section 82, and, as such, "unlike the claimed invention, *Littman's* actuator is not under load and is therefore not able 'to rotate the crawler track while a portion of the total machine load is carried by it,' as it would be if it were located as claimed." *Id.* at 33–34. Patent Owner also argues that Littman discloses an articulating leg, rather than a jacking column. *Id.* at 34.

With respect to Miller, Patent Owner argues that the driver motor for Miller's rotary actuator is positioned on the walking beam, not between the crawler track and jacking column. PO Resp. 35. Patent Owner argues that "there is no 'power drive' physically located between those support means and the corresponding tracks." *Id.*

Petitioner replies that Miller discloses steering housing 122 includes rotary actuator components and is located physically between the jacking column and crawler track. Pet. Reply 15 (referencing Ex. 1009, Fig. 14; Ex. 1157, 76:4–82:18). Petitioner adds that the fact that the drive motor for Miller's actuator is situated on the walking beam "does not change the fact that several parts of the rotary actuator are *physically located* between the

jacking column and the crawler track, and that this rotary drive rotates the crawler track relative to the jacking column (up to 180 degrees). *Id.* at 16–17 (referencing Ex. 1009, 7:35–60, Figs. 1, 7).

Patent Owner argues that "the 'considerable elapsed time' of at least 25 years between the issuance of *Littman* and *Miller* and the earliest filing date accorded to the '749 [p]atent shows that physically placing a power drive between a swing leg's jacking column and the crawler track of a slipform paver was ***not*** obvious." PO Resp. 43–44 (citing *Leo Pharm. Prods., Ltd. v. Rea*, 726 F.3d 1346, 1356–57 (Fed. Cir. 2013)); *see also* PO Sur-reply 12 (citing *Leo Pharm. Prods.*, and stating that "*Miller* was filed ***thirty-four years*** before the '749 [p]atent's priority date").

We have considered Patent Owner's counter arguments, but do not find them sufficient, on the entire trial record, to demonstrate a deficiency in Petitioner's position that the state-of-the art evidence supports Petitioner's reasoning that a person having ordinary skill in the art would have been motivated to modify CIII by adding a rotary actuator as taught by Rio at the bottom of CIII's jacking column.

We find Patent Owner's arguments that the state-of-the-art evidence does not disclose power drives or jacking columns as recited in the claims inapposite. We do not understand Petitioner to rely on Littman, Miller, or Johns as part of its combination under Ground 1, such that these references disclose the recited claim language. Instead, Petitioner relies on Littman, Miller, and Johns to illustrate what an artisan of ordinary skill would have understood when considering the combination of CIII and Rio's teachings. *See Ariosa Diagnostics v. Verinata Health, Inc.*, 805 F.3d 1359, 1365 (Fed. Cir. 2015) ("Art can legitimately serve to document the knowledge that skilled artisans would bring to bear in reading the prior art identified as

producing obviousness.”). For example, as Petitioner argues, Miller discloses a slipform paver with a rotary actuator with many of its components positioned physically between the jacking column and crawler track, at least suggesting this location for an actuator. *See* Pet. Reply 16–17 (referencing Ex. 1009, 7:35–60, Figs. 1, 7).

To the extent that Patent Owner argues that Littman and Johns are not relevant to the state-of the art (*see* PO Resp. 33, 36), we do not agree. We find that all three state-of-the-art references are *reasonably* pertinent to a problem being solved by the inventors of the ’749 patent. *See Chemours Co. FC, LLC v. Daikin Indus., Ltd.*, 4 F.4th 1370, 1376 (Fed. Cir. 2021) (“Although the Board may rely on other prior art to inform itself of the state of the art at the time of the invention, the scope of the relevant prior art is that which is ‘reasonably pertinent to the particular problem with which the inventor was involved.’” (quoting *Stratoflex, Inc. v. Aeroquip Corp.*, 713 F.2d 1530, 1535 (Fed. Cir. 1983)). All three references are reasonably pertinent to the problem of independently steering a wheel or crawler track of a construction vehicle.

Littman, for example, is concerned with a particular problem of ensuring that the drive means on the ends of each leg (for example, a wheel or crawler track) move and position the prime mover regardless of the position or extension of the stabilizer legs. Ex. 1007, 4:19–21, 7:60–67. Like the inventors of the ’749 patent, who were involved in the problem of coordinating the position of each crawler track as a swing leg rotates, Littman also coordinates the orientation of its drive means regardless of how its legs move relative to body 20. *Id.*; *see also id.* at 8:42–9:13 (describing how Littman’s control system coordinates the rotation of its drive means based on the orientation of a stabilizer leg); Ex. 1002 ¶¶ 141, 148.

[redacted]

Miller is a slipform paver that seeks to address 90-degree (or greater) rotation of its crawler track. *See, e.g.*, Ex. 1009, 1:60–67 ("Not only can the four tracks be turned 90° or more in either direction to make the machine operable along two different axes perpendicular to the frame to allow attachment of the tool on any of the four sides or in a straddle position, the frame can be moved along with all four tracks at any desired angle to the frame and the power of one pair of tracks can be used to extend or retract the frame as desired along its telescoping positions."); Ex. 1002 ¶ 49 (discussing Miller's ability to rotate crawler track 180°).

Johns discloses a construction vehicle that is "highly maneuverable." Ex. 1011 ¶ 5; *see also id.* ¶ 20 ("The slew drive 42 allows the wheel bracket 36 to be rotated about a vertical axis through 180 degrees of motion, thus, allowing steering of the wheel 32."); Ex. 1002 ¶ 50 (discussing Johns's ability to rotate wheels 180°).

We recognize that Littman and Johns do not disclose slipform pavers. This fact, however, is not fatal to their contribution to the state-of-the-art. Instead, we weigh this fact as part of our weighing of the totality of the evidence directed to motivation to combine CIII and Rio.

Patent Owner's reliance on *Leo Pharm. Prods.* is inapposite. First, the holding on which Patent Owner relies from *Leo Pharm. Prods.* concerns an "obvious-to-try" analysis, which is not at issue here. *Leo Pharm. Prods.*, 726 F.3d 1356–57. Second, significant to the decision in *Leo Pharm. Prods.* is the fact that it was the inventor that discovered the problem to be solved. According to Patent Owner, that is not the case here, as Patent Owner alleges a long-felt need. *See, e.g.*, PO Sur-Reply 12 (arguing that the '749 patent embodies advances for which there was a long-felt need).

c) Petitioner's contentions with respect to reasonable expectation of success

Petitioner contends that "[i]mplementing Rio's actuators, sensors, and control system on the CIII machine would have constituted nothing more than a combination of well-known prior-art elements according to known methods to yield predictable results." Pet. 34 (referencing Ex. 1002 ¶ 63). Petitioner explains that "Rio's actuators, sensors, and control system already successfully allowed an operator to move a swing leg while orienting the associated crawler track in the travel direction." *Id.* (referencing Ex. 1002 ¶ 63). Petitioner adds that a person having ordinary skill in the art "would have recognized that Rio's actuators, sensors, and control system when implemented on CIII's paver would function in the same manner as they functioned on Rio's machine." *Id.* (referencing Ex. 1002 ¶ 63).

(1) Patent Owner's counter arguments and Petitioner's Reply and Patent Owner's Sur-reply arguments – reasonable expectation of success

Patent Owner argues that Petitioner has not demonstrated a reasonable expectation of success in combining CIII and Rio, and that Petitioner mischaracterizes the state of the art in supporting its reasons to combine. PO Resp. 37–45. Patent Owner argues that Petitioner's proposed modification of CIII with Rio's teachings "wholly elide[s] the redesign issues, steering torque requirements, and undesirable backlash that would have thwarted any reasonable expectation of success in replacing the *CIII* machine's hydraulic steering cylinder with *Rio's* rotary actuator." *Id.* at 38 (referencing Ex. 2030 ¶ 69).

Patent Owner argues that Petitioner proposes to replace CIII's steering cylinder with a rotary actuator, so "the rotary actuator must generate enough torque to match that generated by the hydraulic steering cylinder." Pet. 39.

Patent Owner argues that such a substitution "would have required, at the very least, extensive experimentation to determine whether the rotary actuator under consideration could produce the necessary torque." *Id.* Patent Owner argues that Petitioner does not account for this experimentation nor does Petitioner demonstrate "that the references working together would be able to produce the requisite steering torque needed to steer the CIII machine." *Id.* at 39–40. Patent Owner argues that, "because *Rio's* milling machine is far smaller than *CIII* and ***still*** requires the operator to raise the lifting column before engaging the rotary actuator, a [person having ordinary skill in the art] would recognize that *Rio's* design would not have generated the requisite torque to steer a large slipform paver." *Id.* at 40 (referencing Ex. 2030 ¶ 71, which cites to Ex. 1006, 8:1–9:11).

Patent Owner adds that Petitioner does not address that replacing CIII's hydraulic steering cylinder with a rotary actuator would require the jacking column to be significantly redesigned. PO Resp. 40. Patent Owner argues that Petitioner's proposed modification eliminates the keyway system taught in Rio for transferring torque from the rotary actuator to the crawler. *Id.* at 40–41.

Also, Patent Owner argues that a person having ordinary skill in the art "would understand that . . . any attempts at replacing the *CIII* machine's hydraulic steering cylinder with *Rio's* rotary actuator would have required, at the very least, extensive experimentation addressing and overcoming the undesirable backlash that would have resulted from the use of a rotary actuator." PO Resp. 42. Patent Owner argues that "neither [Petitioner] nor Dr. Singhose consider or address the undesirable backlash that would have frustrated any reasonable expectation of success." *Id.*

Patent Owner adds that Petitioner's own internal engineering analyses demonstrates that there is no reasonable expectation of success in modifying CIII to use a rotary actuator to steer a crawler track. PO Resp. 42–43 (referencing Exs. 2002, 2003, 2011; Ex. 2030 ¶ 77).

Petitioner replies that testimony from Patent Owner's witnesses supports Petitioner's positions with respect to a reasonable expectation of success in combining the teachings of CIII and Rio. First, Petitioner argues that Mr. Breidenbach, one of Patent Owner's declarants, testified that his experience with milling machines qualified him to testify about pavers, and that the jacking columns on both machines "have very many similarities and few differences," countering Patent Owner's argument about the differences between Rio and CIII. Pet. Reply 11 (referencing Ex. 1160, 28:19–29:15). Next, Petitioner argues that Dr. Nelson testified that his experience with small machines qualified him to testify about heavy machinery, "because 'the physics principles are the same' and the '[s]tresses and strains, kinematics, all those controls, all those types of things are the same, whether they are applied to road construction equipment or to other machines and mechanisms.'" *Id.* at 12 (referencing Ex. 1157, 13:11–14:22, 15:4–16:16) (alteration in original).

Specific to the torque requirements, Petitioner replies that Rio discloses steering a crawler track with a rotary actuator, belying Patent Owner's concerns over torque. Pet. Reply 13 (referencing Ex. 1006, 9:15–42); *see also id.* ("One would have known from this disclosure that *Rio's* rotary actuator can perform the same operation (with success) in *CIII*, which also has crawler tracks that require steering.") (referencing Ex. 1002 ¶¶ 53–56, 61, 97, 128). Petitioner adds that "[a]s [Patent Owner]'s expert testified, addressing these matters (including stresses, strain, and backlash)

from machine to machine is just a matter of math because 'the physics principles are the same.'" *Id.* at 14 (referencing Ex. 1157, 13:11–16:13).

Specific to backlash, Petitioner replies that Rio discloses that worm-gear actuators may be used—the same type of actuators disclosed in the '749 patent. Pet. Reply 14 (referencing Ex. 1006, 5:1–3; Ex. 1001, 11:35–49). Petitioner adds that the '749 patent recognizes that such "actuators were commercially known and minimized backlash." *Id.* (referencing Ex. 1001, 11:46–56). Petitioner argues that Patent Owner "cannot tout the lack of backlash in a *commercially known* rotary actuator described in its own patent and then accuse *that same rotary actuator design* of having undesirable backlash when it appears in a prior-art reference." *Id.* at 14–15.

Finally, Petitioner replies that Patent Owner's arguments directed to Petitioner's engineering analyses "miss the mark," because those analyses were based on Helac rotary actuators, which are not worm-gear drives, making Patent Owner's arguments "irrelevant" to a reasonable expectation of success of Petitioner's proposed modification. Pet. Reply 15.

Patent Owner replies that "[g]iven that *Rio* does not give the [person having ordinary skill in the art] any *reason* to place it in that location or any explanation of *how* it could be done, it is apparent that Petitioner's proposed combination is the product of hindsight." PO Sur-reply 7. Patent Owner argues that this position "is supported by the fact that Petitioner's proposed combination changes *Rio's* principle of operation." *Id.* (referencing *In re Ratti*, 270 F.2d 810, 813 (CCPA 1959)).

(2) Findings – Reasonable Expectation of Success

"The presence or absence of a reasonable expectation of success is . . . a question of fact." *Intelligent Bio-Sys., Inc. v. Illumina Cambridge Ltd.*, 821 F.3d 1359, 1366 (Fed. Cir. 2016). "The reasonable expectation of

success requirement refers to the likelihood of success in combining references to meet the limitations of the claimed invention." *Id.* at 1367. We find, on the complete trial record, that a person having ordinary skill in the art would have had a reasonable expectation of success in combining Rio's teachings of steering a crawler track with a rotary actuator, including positioning the rotary actuator at the bottom of a jacking column. Specifically, we find that Rio's disclosure supports this finding. Rio discloses a heavy equipment machine with a jacking column and a crawler track where the crawler track is steered with a rotary actuator, which supports a finding that a person having ordinary skill in the art would have had a reasonable expectation of success in modifying CIII's steering mechanism with Rio's teachings of a rotary actuator to steer a crawler track. *See, e.g.*, Ex. 1006, 4:38–40, 51–53 ("[W]ork machine 10 includes a support device 40 connected between the machine frame 12 and the one ground engaging unit 20 . . . [and] includes a lifting column 46 adapted to controllably raise and lower the associated connected ground engaging unit 20."), 4:44–47 ("[S]econd actuator 44 is associated with the support device 40 and is adapted to maintain the same rotational direction of the one ground engaging unit 20 in each of the projecting and retracted positions."), 4:61–5:3 ("[A]t least one of the first and second actuators 42, 44 is a rotary actuator. . . . [R]otary actuators such as worm or sun gear designs that are well-known mechanical implementations may . . . be employed with good result.").

Additionally, we find that the principles governing the use of rotary actuators on Rio's road machine would be equally applicable to CIII's machine. We base this finding on evidence in Rio that actuators, such as worm or sun gear actuators, are well known. Ex. 1006, 5:1–3. Also, we

base this finding on Patent Owner's expert's testimony that principles used to design machines, whether on a small scale or large scale, are the same. *See* Ex. 1157, 14:8–16:13; *see, e.g.*, *id.* at 16:5–13 ("[T]he mechanical engineering principles are the same. . . . And the formulas are the same, and the math is the same, and the physics behind it is the same.").

We also find that the state-of-the-art evidence supports this finding. *See* Pet. 29–30; Ex. 1002 ¶ 55; *see also* Exs. 1007, 1009, 1011 (illustrating rotary actuators positioned adjacent to and above wheels or crawler tracks and used to steer the associated machines). We address Petitioner's contentions and Patent Owner's counter arguments directed to the state-of-the-art evidence in Subsection III.C.1.b above, directed to the state-of-the-art evidence.

We have considered Patent Owner's counter arguments, but do not find them sufficient, on the entire trial record, to demonstrate a deficiency in Petitioner's position with respect to reasonable expectation of success in combining Rio's teachings with CIII. As an initial point, we note that the record does not include any evidence that the redesign, torque, and backlash issues identified by Patent Owner are beyond the level of ordinary skill—a degreed mechanical engineer with at least two years of design, development, and operating experience with heavy equipment. This finding is consistent with the '749 patent, which is written for a person having ordinary skill in the art, and does not disclose how to address these technical issues. *See, e.g.*, *Smith & Nephew, Inc. v. Rea*, 721 F.3d 1371, 1381–82 (Fed. Cir. 2013) (addressing a patent owner's argument as to an alleged technical issue in the proposed combination, stating that "[t]his naturally raises the question of how [patent owner] managed to make such a combination work").

We do not agree that Petitioner fails to address the redesign of CIII jacking column. *See* PO Resp. 40–41. Indeed, this "redesign" is at the core of one of Petitioner's motivations for its proposed modification. By replacing CIII's steering cylinder with a rotary actuator, CIII's jacking column's design would be simplified. *See* Pet. 30; Ex. 1002 ¶ 55. The redesign eliminates the need for Rio's key system to transmit power from the rotary actuator through the lifting column to the crawler track, thus simplifying the power transmission. We credit Dr. Singhose's testimony that modifying the jacking column to be fixed rotationally would simplify manufacture and maintenance of the jacking column and reduce the power needed to rotate the tracks, as only the tracks would rotate. *See* Ex. 1002 ¶ 55. We credit this testimony, in part, because it is consistent with our understanding of mechanical requirements of the modified device. For example, by not rotating, the jacking column would not be subjected to the wear and maintenance requirements of rotating machinery.

Also, with respect to sufficient torque, we find Patent Owner's argument inapposite. First, Patent Owner's argument assumes that the claims require the crawler track to be in contact with the ground when the rotary actuator rotates the crawler track ("on-the-fly steering"). *Cf.* Tr. 41:3–42:2 (arguing that Rio does not disclose that there would be sufficient torque for on-the-fly steering). Less torque would be required to rotate the crawler track when it is raised off the ground. *See id.* (recognizing that Rio discloses sufficient torque to rotate the crawler track when it is raised off the ground). Second, Rio discloses that sufficient torque can be generated to rotate the crawler track, both when engaged with the ground and raised off the ground. *See* Ex. 1006, 8:1–59 (describing rotating the crawler track (ground engaging unit 20) when the crawler track is off the ground), 9:15–42

(describing rotating ("steering") the crawler track when engaged with the ground).

With respect to backlash, we agree with Petitioner that Rio discloses the type of rotary actuators that reduce the backlash issue. *Compare* Ex. 1006, 5:1–3 (disclosing worm-gear rotary actuators), *with* Ex. 1001, 11:35–56 (disclosing that a slew or worm gear rotary actuator "effectively minimizes undesirable play or 'backlash'").

Patent Owner's reliance on Petitioner's engineering documents are inapposite. As Petitioner argues, these analyses focus on one type of rotary actuator, a Helac Rotary Actuator. *See* Ex. 2002, 1; Ex. 2003, 1; Ex. 2011, 1. Also, these documents reflect that Petitioner was attempting to place the actuator *within* the jacking column, necessitating a greater diameter column, not on the column at the bottom. *See* PO Resp. 42; Ex. 2002. Indeed, we find that these documents reflect a typical engineering process, where a certain component would be analyzed and accepted or rejected based on the component's performance. We do not find that these documents indicate that Rio's teachings could not be used to modify the machine underlying CIII with reasonable success, in part, because Rio discloses alternative actuators, such as worm and sun gear actuators, in addition to Helac actuators. *See* Ex. 1006, 4:61–5:3.

(3) Conclusion-reasonable expectation of success

We find, on the complete trial record, that Petitioner has demonstrated, by a preponderance of the evidence, that a person having ordinary skill in the art would have had reasons to combine Rio's teaching directed to its actuators, sensors, and control system with CIII's control system, with a reasonable expectation of success. We weigh heavily Rio's own disclosure on using a rotary actuator in conjunction with a jacking

column. We also agree with Patent Owner's declarant, Dr. Nelson, that any problem that may be encountered in combining the teachings of CIII and Rio is the type a mechanical engineer may encounter with many types of machines and mechanisms, and the physics and math involved in solving these problems are the same. *Cf.* Ex. 1157, 13:11–16:13.

d) Conclusion-motivation to combine

In conclusion, we find that Petitioner has demonstrated, by a preponderance of the evidence, that a person having ordinary skill in the art would have had reasons to combine Rio's and CIII's teachings and would have had a reasonable expectation of success in the combination. We also find that Petitioner's reasons are adequately supported with rational underpinnings. *See KSR Int'l Co.*, 550 U.S. at 418 (stating that, to facilitate the analysis of an obviousness position, the proponent should provide "some articulated reasoning with some rational underpinning to support the legal conclusion of obviousness").

We are persuaded, on the complete record, that a person having ordinary skill in the art would have been motivated to increase crawler track motion and maneuverability, specific motivations not rebutted by Patent Owner.[20] *See* Pet. 29; Ex. 1002 ¶ 48. Also, we find that Rio expressly provides motivation for the modification. *See* Ex. 1006, 5:3–7 ("Such use of a rotary actuator provides a compact apparatus to achieve rotary motion

[20] We address the specific motivation of positioning the rotary actuator physically between the jacking column and crawler track below, in addressing the power drive limitation of claim 1 for Ground 1, as this motivation is interrelated to the dispute of whether Rio discloses this subject matter.

without the need for complicated and bulky linkages, and may also be used to provide fine rotary steering control."); Pet. 29; Ex. 1002 ¶ 48.

We also find that the state-of-the-art evidence supports this motivation. *See* Exs. 1007, 1009, 1011 (disclosing maneuverable construction machines, where crawler tracks or wheels are independently driven by rotary actuators). Although Littman and Johns are not directed to slipform pavers, which lessens their weight, we still give this evidence some weight. Once again, we find Dr. Nelson's testimony instructive here—that the mechanical engineering aspects of smaller machines may be applied to heavy equipment, as the physics and math are the same. *See* Ex. 1157, 13:11–16:13.

We are also persuaded that, given the modification of CIII to add Rio's rotary actuator, a person having ordinary skill in the art "would have known that implementing Rio's sensors and control system in CIII would allow an operator to pivot the swing leg with a hydraulic actuator or other known mechanism such as Rio's rotary or linear actuator." Pet. 33. This system would "automatically orient the associated crawler track in the paving direction or another desired direction without needing to rotate the swing leg and crawler track in separate steps or recalibrate the crawler tracks." *Id.* at 34 (referencing Ex. 1005, 2-6, 3-17–18; Ex. 1006, 4:40–44; Ex. 1002 ¶ 62). Supporting our finding is the similarity between CIII's control system and Rio's control system, both of which provide a feedback loop to control the rotation of the crawler track.

As we discuss above, we also find that a person having ordinary skill in the art would have had a reasonable expectation of success in modifying CIII with Rio's rotary actuator. We also find, based, in part, on the similarities in CIII's control system and Rio's control system, that a person

having ordinary skill in the art would have had a reasonable expectation of success in making this modification. We credit Dr. Singhose's testimony on this subject, which is consistent with our understanding of the two control systems. *See* Ex. 1002 ¶¶ 61–63. This latter point is not disputed here.

2. *Independent claim 1*

Having addressed Petitioner's reasons for combining the teachings of Rio and CIII, and the reasonable expectation of success of combining the teachings, we now turn to the scope and content of the prior art and any differences between the prior art and independent claim 1, on a limitation-by-limitation basis.

a) Undisputed limitations of claim 1

The following limitations of claim 1 are not disputed in this proceeding. We do, however, evaluate Petitioner's contentions to ensure they demonstrate, by a preponderance of the evidence, that the references disclose the subject matter.

(1) Preamble

The preamble of claim 1 recites "[a] swing leg assembly." Ex. 1001, 22:40. Petitioner contends, "[i]f the preamble is limiting, CIII discloses a swing-leg assembly." Pet. 35 (referencing Ex. 1005, 3-14, 3-17; Ex. 1002 ¶ 65).

Upon review of the information in the Petition and corresponding evidence, we determine Petitioner has demonstrated, by a preponderance of the evidence, on the complete record, that CIII discloses the subject matter of the preamble of claim 1. *See* Ex. 1005, 3-4, 3-17; Ex. 1002 ¶ 65. In view of this determination, we need not determine whether the preamble is limiting.

(2) "Swing leg" limitation

Claim 1 also recites "a swing leg configured to mechanically couple with a surface of a module frame." Ex. 1001, 22:41–42 (the "swing leg" limitation of claim 1). Petitioner contends that "CIII discloses a 'mount,' . . . that attaches ('mechanically couple[s]') the swing leg to the surface of the machine frame (i.e., the 'module frame')." Pet. 36 (referencing Ex. 1005, 3-17–18; Ex. 1002 ¶ 66); *see id.* at 36, 37 (providing an annotated schematic and photograph, respectively, from CIII, identifying the swing leg, module frame, and hinge bracket, and referencing Ex. 1005, 3-14, 3-23).

Upon review of the information in the Petition and corresponding evidence, we determine Petitioner has demonstrated, by a preponderance of the evidence, on the complete record, that CIII discloses the subject matter of the "swing leg" limitation of claim 1. *See* Ex. 1005, 3-14, 3-17–18, 3-23; Ex. 1002 ¶ 66.

(3) "Crawler track" limitation

Claim 1 also recites "a crawler track." Ex. 1001, 22:43 (the "crawler track" limitation of claim 1). Petitioner contends that "CIII discloses a crawler track." Pet. 37 (referencing Ex. 1005, 2-10, 3-17; Ex. 1002 ¶ 67); *see id.* at 38 (showing annotated photograph from CIII identifying a crawler track).

Upon review of the information in the Petition and corresponding evidence, we determine Petitioner has demonstrated, by a preponderance of the evidence, on the complete record, that CIII discloses a crawler track. *See* Ex. 1005, 2-10, 3-17; Ex. 1002 ¶ 67.

(4) "Jacking column" limitation

Claim 1 also recites "an upright jacking column secured to the swing leg, having a rotary connection between the jacking column and the crawler

track permitting relative rotational movements of the crawler track and the jacking column about a first upright axis." Ex. 1001, 22:44–48 (the "jacking column" limitation of claim 1). Petitioner contends that "CIII discloses an upright jacking column secured to the swing leg," where the track can be raised by the column to allow the swing leg to pivot. Pet. 38–39 (referencing Ex. 1005, 3-17, 1-10–11, 2-16, 3-12, 3-17; Ex. 1002 ¶ 68). Petitioner adds that "[t]he jacking column includes a lower guide tube that telescopes in and out of the upper guide tube to raise or lower the track or frame." *Id.* at 39 (referencing Ex. 1005, 3-17, 5-15, 5-35); *see id.* (providing annotated photographs from CIII showing details of the jacking column).

Petitioner contends that CIII discloses a hydraulic steering cylinder that rotates "the track and guide tubes relative to the outer cylinder of the jacking column." Pet. 40 (referencing Ex. 1005, 5-7, 5-35, 5-37, 8-71–72; Ex. 1002 ¶¶ 69–71); *see id.* at 40–41 (providing annotated photographs from CIII showing steering cylinder and the rotation of a crawler track).

Upon review of the information in the Petition and corresponding evidence, we determine Petitioner has demonstrated, by a preponderance of the evidence, on the complete record, that CIII discloses the subject matter of the "jacking column" limitation.

(5) "First angular transducer" limitation

Claim 1 also recites "a first angular position transducer between the jacking column and the crawler track, configured to emit a first signal which is indicative of an angular orientation of the crawler track relative to the jacking column." Ex. 1001, 22:49–52 (the "first angular transducer" limitation of claim 1). Petitioner contends that Rio's rotation sensor 75, which is associated with rotary actuator 44, corresponds to the recited first angular transducer. Pet. 45 (referencing Ex. 1006, 6:6–11; Ex. 1002 ¶¶ 77–

78). Petitioner explains that "[s]ensor 75 generates a rotational position signal 124 'indicating the instantaneous rotation angle' of ground engaging unit 20 ('crawler track') that goes to controller 32." *Id.* (referencing Ex. 1006, 7:23–27, 8:38–39). Petitioner also contends that CIII has a sensor corresponding to the first angular position transducer. *Id.* at 47 (referencing Ex. 1005, 8-106, 8-110; Ex. 1002 ¶ 79).

Petitioner contends that "it would have been obvious to replace CIII's steering-cylinder sensor with Rio's rotation sensor 75, and to place Rio's sensor . . . near the intersection point between the bottom of the jacking column and the top of the crawler track," satisfying this limitation. Pet. 46–47 (referencing Ex. 1002 ¶ 80).

Upon review of the information in the Petition and corresponding evidence, we determine Petitioner has demonstrated, by a preponderance of the evidence, on the complete record, that CIII, as modified by Rio's teachings of its control system, discloses the subject matter of the "first angular transducer" limitation. *See* Ex. 1006, 6:6–11, 7:23–27, 8:38–39; Ex. 1002 ¶¶ 77–78; *see also* Ex. 1005, 8-106, 8-110; Ex. 1002 ¶ 79 (identifying how CIII itself discloses the subject matter).

(6) "Second angular transducer" limitation

Claim 1 also recites "a second angular position transducer between the swing leg and the module frame, configured to emit a second signal which is indicative of an angular orientation of the swing leg relative to the module frame." Ex. 1001, 22:53–56 (the "second angular transducer" limitation of claim 1). Petitioner contends that Rio's pivot sensor 83 corresponds to the recited second angular transducer. Pet. 48 (referencing Ex. 1006, 6:23–26, 7:19–23, 8:32–34, Fig. 3; Ex. 1002 ¶¶ 81–82). Petitioner adds that "[i]t

would have been obvious to implement Rio's pivot sensor 83 between CIII's swing leg and module frame." *Id.* at 49.

Upon review of the information in the Petition and corresponding evidence, we determine Petitioner has demonstrated, by a preponderance of the evidence, on the complete record, that CIII, as modified by Rio's teachings of its control system, discloses the subject matter of the "second angular transducer" limitation. *See* Ex. 1006, 6:23–26, 7:19–23, 8:32–34, Fig. 3; Ex. 1002 ¶¶ 81–82.

(7) "Processor" limitation

For the last undisputed limitation, claim 1 recites "a processor operable to receive the first and second signals and configured to emit a control signal for activating the power drive and thereby rotationally move the crawler track relative to the jacking column to maintain an orientation of the crawler track in response to changes of the first signal caused by pivotal motions of the swing leg about an upright pivot shaft." Ex. 1001, 22:61–67 (the "processor" limitation of claim 1). Petitioner contends that "Rio discloses a controller 32 adapted to coordinate actuation of actuators 42, 44." Pet. 50 (Ex. 1006, 4:18–20, 4:47–50). Petitioner adds that controller 32, the recited processor, receives pivot position signal 122 and rotational position signal 124, the recited first and second signals. *Id.* (referencing Ex. 1006, 6:65–66, 7:11–13; Ex. 1002 ¶ 84).

Petitioner explains that controller 32 actuates first actuator 42 to move swing arm 76 and pivot sensor 83 tracks the movement. Pet. 50–51 (referencing Ex. 1006, 8:31–34; Ex. 1002 ¶ 85). Petitioner adds that controller 32 uses signals 122, 124 to actuate second actuator 44 to rotate a crawler track to maintain the track in the same running direction. *Id.* at 51 (referencing Ex. 1006, 8:34–47).

Petitioner contends that "[i]t would have been obvious to implement Rio's control system so that CIII's controller—a processor already equipped to receive signals from sensors—receives the first and second signals and emits the claimed 'control signal.'" Pet. 52. We addressed Petitioner's reasons for this modification above.

Upon review of the information in the Petition and corresponding evidence, we determine Petitioner has demonstrated, by a preponderance of the evidence, on the complete record, that CIII, as modified by Rio's teachings of its control system, discloses the subject matter of the "processor" limitation. *See* Ex. 1006, 4:18–20, 4:47–50, 6:65–66, 7:11–13, 8:31–47; Ex. 1002 ¶¶ 84–85).

b) Disputed limitation of claim 1 – the "power drive" limitation

Claim 1 recites "a power drive between the jacking column and the crawler track, configured for translating relative rotational movements between the jacking column and the crawler track." Ex. 1001, 22:57–60 (the "power drive" limitation of claim 1).

(1) Petitioner's contentions

Petitioner identifies Rio's rotary actuator 44 as a power drive "that rotates the crawler track and portions of lifting column 46 about a vertical lifting column axis 48 (a 'first upright axis')." *Id.* at 41 (referencing Ex. 1006, 4:56–5:7, 5:32–34). We reproduce Petitioner's annotated version of Rio's Figure 2, below.

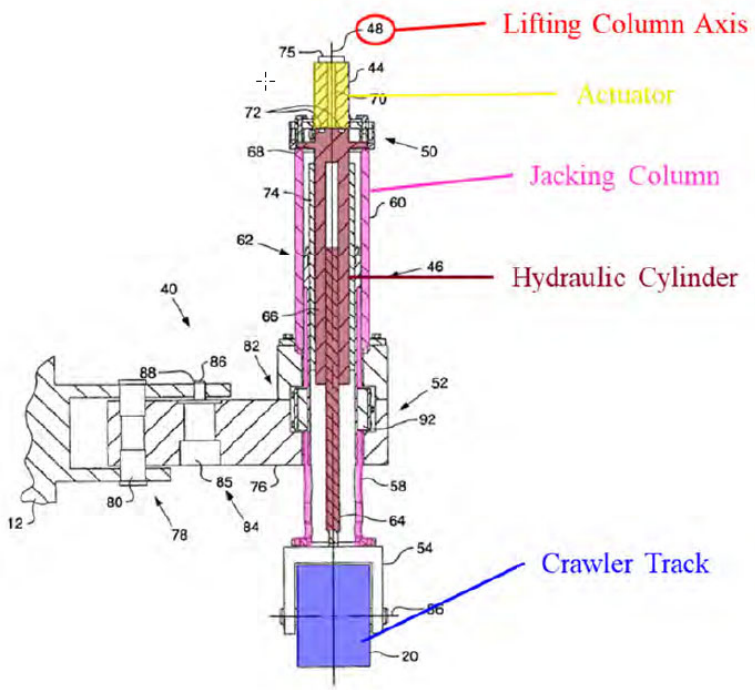

Pet. 42. Figure 2 depicts a longitudinal section of a portion of Rio's cold planer, showing a swing arm, lifting, or jacking, column, and ground engaging unit. Ex. 1006, 3:29–30, 3:62–64, 4:51–53, 6:12–15. Petitioner's annotations identify the crawler track (ground engaging unit, in purple), hydraulic cylinder (in maroon), jacking column (in pink), actuator (in yellow), and lifting column axis (in red).

Petitioner recognizes that Rio discloses, in Figure 2, that rotary actuator 44 is located at the top of Rio's lifting (jacking) column. *See* Pet. 30. Petitioner contends that "it would have been obvious to modify CIII's leg assembly by positioning Rio's rotary actuator 44 at the bottom of the jacking column and on top of the crawler track . . . , and using that power drive in combination with Rio's pivot sensor and coordinated control system." *Id.* at 44. Petitioner explains that, "[u]nder this design, . . . the entire jacking column would be fixed rotationally, and the rotary drive would be coupled between the bottom of the lower guide tube and the top of

the crawler track and would rotate the crawler track relative to the jacking column." *Id.* (referencing Ex. 1002 ¶ 74).

Petitioner contends that Rio itself suggests this modification. Pet. 30 ("[G]iven Rio's disclosure that rotary actuator 44 can be 'positioned on the lifting column' anywhere 'along the lifting column axis 48,' a [person having ordinary skill in the art] would have known to mount Rio's rotary actuator 44 at the bottom of CIII's jacking column.") (referencing Ex. 1006, 5:8–11; Ex. 1002 ¶¶ 52–55), 44 ("Rio also provides disclosure and motivation for this modification.") (referencing Ex. 1006, 5:8–11). Petitioner adds that locating a rotary actuator at the bottom of a lifting column to rotate a crawler track was known in the art. *Id.* at 44 (referencing Ex. 1007, 5:14–59, Figs. 4–5; Ex. 1009, 7:35–58, Fig. 7; Ex. 1002 ¶¶ 52, 75).

Petitioner contends that this proposed modification would simplify CIII's jacking column, "as the guide tubes would no longer need to rotate relative to the outer cylinder." Pet. 30; *see also* Ex. 1002 ¶¶ 53–55 (detailing the modification, including the simplified lifting column design).

(2) Patent Owner's counter arguments

Patent Owner argues that "*Rio* does not teach or suggest locating a power drive physically between a jacking column and crawler track." PO Resp. 25. Patent Owner argues that "*Rio* discloses positioning the rotary actuator near the top of the lifting column (and above the cylinder) so that sufficient torque is transmitted down through the lifting column to rotate the crawler track." *Id.* at 29 (referencing Ex. 2030 ¶ 54).

Patent Owner also argues that Rio fails to explain how an actuator located anywhere along the lifting column other than at the top would operate to turn the crawler track. PO Resp. 30. Patent Owner concludes that

> *Rio's* preference for locating the rotary actuator at or near the top of the jacking column and the lack of any enabling disclosure of how the rotary actuator would be utilized elsewhere along the jacking column (to say nothing of locating it between the jacking column and crawler track, as claimed) indicates that a [person having ordinary skill in the art] would not have been led to the claimed invention given the teachings in the art.

Id. (citing *In re Bell*, 991 F.2d 781, 785 (Fed. Cir. 1993)).

Patent Owner also argues that "*Rio* did not contemplate placing its rotary actuator between the lifting column and crawler track in view of its failure to disclose a rotary connection between those two elements, as claimed." PO Resp. 30. Patent Owner argues that Petitioner's modification would require "redesigning the only structure *Rio* discloses that is capable of manipulating the crawler tracks, neither of which does *Rio* teach." *Id.* at 31 (referencing Ex. 2030 ¶ 56). Patent Owner argues that Petitioner "fails to provide sufficient explanation as to why *Rio*'s disclosure that a rotary actuator is '***positioned on***' the lifting column, and preferably at the top, suggests . . . that its rotary actuator could or should be placed physically between the jacking column and the crawler track of the *CIII* machine." *Id.* (emphasis in original). Patent Owner concludes that this failure indicates that Petitioner's modification is the product of hindsight. *Id.* at 31–32.

We address Patent Owner's arguments directed to the state-of-the-art evidence above. *See* PO Resp. 33–37 (arguing against Petitioner's reliance on state-of-the-art evidence in support of Petitioner's proposed modification), 43–45 (arguing that Petitioner misrepresents the state-of-the-art evidence); Section III.C.1.b, *supra* (addressing these arguments).

(3) Petitioner's Reply and Patent Owner's Sur-reply arguments

Petitioner replies that Patent Owner improperly limits Rio to a single embodiment. Pet. Reply 10. Petitioner argues that Rio expressly discloses

an alternative preferred embodiment, where "actuator 44 is positioned on the lifting column 46 at a location spaced apart from the first actuator 42 ***along the lifting column axis 48***." *Id.* (referencing Ex. 1006, 5:8–11) (emphasis in original). Petitioner explains that the teaching of positioning actuator 44 on the lifting column along axis 48 includes a position at the bottom of the lifting column. *Id.*

Petitioner argues that Patent Owner misrepresents Petitioner's obviousness position by "contending it requires 'entirely redesigning' *Rio's embodiments*." Pet. Reply 13 (citing PO Resp. 31). Petitioner argues that "*Rio* is a *secondary reference* in [the proposed] combination used to modify *CIII*—no overhaul of *Rio*'s design is necessary." *Id.*

In its Sur-reply, Patent Owner repeats its position that "*Rio's* only fully developed embodiment, the rotary actuator is located on top of the upper portion of *Rio's* lifting column." PO Sur-reply 3–4. Patent Owner reiterates that "*Rio* does not guide a [person having ordinary skill in the art] to locate the rotary actuator between the lifting column and crawler track at all," and that the teaching on which Petitioner relies is vague. *Id.* at 5. Patent Owner argues that Rio's disclosure would guide a person having ordinary skill in the art to position the rotary actuator at the upper portion of the lifting column. *Id.* at 6.

Patent Owner argues that Rio's vague teaching of positioning the actuator along the axis of the lifting column is insufficient to motivate a person having ordinary skill in the art to position the actuator at the bottom of the lifting column. PO Sur-reply 7. Patent Owner argues "[g]iven that *Rio* does not give the POSITA any *reason* to place it in that location or any explanation of *how* it could be done, it is apparent that Petitioner's proposed

combination is the product of hindsight." *Id.* (citing *Metalcraft of Mayville, Inc. v. The Toro Co.*, 848 F.3d 1358, 1367 (Fed. Cir. 2017)).

Patent Owner also argues that "Petitioner's proposed combination changes *Rio's* principle of operation." PO Sur-reply 7–8 (referencing *In re Ratti*, 270 F.2d at 813). In responding to Petitioner's reply argument that Rio is a secondary reference that is not being modified, Patent Owner argues that "the law makes no distinction between primary and secondary references, it only asks whether the 'suggested combination of references would require a substantial reconstruction and redesign of the elements' or 'a change in the basic principles under which the . . . construction was designed to operate.'" *Id.* at 8 (citing *In re Ratti,* 270 F.2d at 813) (alteration in original).

Patent Owner also argues that Petitioner's simple design is not from the prior art but, instead, taken from the '749 patent. PO Sur-reply 8. Patent Owner adds that "simplicity does not establish obviousness; indeed, simplicity may represent a significant and unobvious advance over the complexity of prior devices." *Id.* at 9 (referencing *Sensonics, Inc. v. Aerosonic Corp.*, 81 F.3d 1566, 1570 (Fed. Cir. 1996)).

(4) Findings and conclusions

We find, on the complete trial record, that a person having ordinary skill in the art would have understood Rio to disclose that its rotary actuator *could* have been positioned physically between a lifting column and crawler track, and, significantly, that a person having ordinary skill in the art *would have had reason* to modify CIII to so position a rotary actuator. We find that Petitioner adequately explains that CIII's steering cylinder would be eliminated, in favor of a worm, or slew, drive rotary actuator between CIII's jacking column and crawler track. Pet. 44; Ex. 1002 ¶¶ 54, 55, 74;

Pet. Reply 14–15. Both Petitioner and Dr. Singhose describe the modifications that would be made to the jacking column. *See id.* And, Petitioner describes why a person having ordinary skill in the art would make such a modification. *See* Pet. 28–32; Ex. 1002 ¶¶ 44–60.

We find that Rio does not limit the position of rotary actuator 44 (which steers the crawler track) to the top of its lifting column. Rio expressly discloses that rotary actuator 44 can be located on lifting column 46 along axis 48. Ex. 1006, 5:8–11; *see also id.* at Fig. 2 (depicting rotary actuator 44, lifting column 46, and lifting column axis 48). This express disclosure would include positioning actuator 44 on lifting column 46 at the bottom of the column.[21] Indeed, Rio teaches only one limitation with respect to where on the lifting column to position the actuator—"a location spaced apart from the first actuator 42." *Id.* at 5:9–10. Actuator 42 projects and retracts ground engaging unit 20, and is attached to support device 40 (the swing arm). *Id.* at 4:40–44, Figs. 3, 4. Rio adds that:

> *Preferably*, the second actuator 44 is located at an upper portion 50 of the lifting column 46 and the first actuator 42 is located at a lower portion 52 of the lifting column 46. Such spaced apart positioning avoids problems caused by an accumulation of mechanical devices at a single location on the lifting column 46.

[21] To the extent Patent Owner argues that positioning rotary actuator 44 at the bottom of lifting column 46 is not "positioned on the lifting column 46" as disclosed in Rio, we do not agree. *See* Ex. 1006, 5:9; PO Resp. 27 (seemingly arguing that positioning rotary actuator 44 at the bottom of lifting column 46 is not on the lifting column). To use a simple analogy, if a person gets gum stuck on the bottom of his or her shoe, that gum is on the shoe.

Id. at 5:11–16. The record does not indicate that CIII, as modified based on Petitioner's proposal, would have mechanical devices other than the actuator at the bottom of the lifting column.

We agree with Petitioner that the state-of-the-art evidence of record suggests positioning a rotary actuator at a position directly atop a crawler track or wheel. Pet. 30–31; Ex. 1002 ¶¶ 49, 50, 134, 147; *see* Ex. 1007, 3:31–5:52, Figs. 4, 5; Ex. 1009, 2:51–53, 7:36–60, Fig. 7; Ex. 1011 ¶ 20, Fig. 2. This suggestion in the art serves as a foundation for how a person having ordinary skill in the art would read Rio's disclosure regarding positioning its rotary actuator 44. *See Ariosa Diagnostics*, 805 F.3d at 1365 (Fed. Cir. 2015). That is, this evidence "serve[s] to document the knowledge that skilled artisans would bring to bear in reading" Rio to encompass positioning the rotary actuator at the bottom of the lifting columns. *See id.*

As we discuss above in connection with our analysis of Petitioner's reasons to combine CIII and Rio, positioning the actuator at the bottom of CIII jacking column would simplify the jacking column's design, "as the guide tubes would no longer need to rotate relative to the outer cylinder." Pet. 30; *see also* Ex. 1002 ¶¶ 53–55 (explaining how CIII's jacking column could be modified so that the guide tubes would no longer need to rotate and that only the crawler track would rotate). Patent Owner's reliance on *Sensonics, Inc.*, which Patent Owner argues supports a conclusion that the invention is not obvious, is inapposite. The court's statement that "simplicity *may* represent a significant and unobvious advance over the complexity of prior devices" was made in the abstract, rather than as a legal tenet specifically applied in the case. *See Sensonics, Inc.*, 81 F.3d at 1570 (emphasis added). The court went on to rigorously review the district

court's findings and conclusions as to obviousness. *See id.* More significantly, the facts here do not demonstrate that the invention of the '749 patent is one that took a complex system and simplified it. Rather, for the specific proposed modification of CIII, placing an actuator on the bottom of a jacking column serves to simplify CIII's jacking column structure. *See* Pet. 30; *see also* Ex. 1002 ¶¶ 53–55 (explaining how CIII's jacking column could be modified so that the guide tubes would no longer need to rotate and that only the crawler track would rotate).

The Federal Circuit's decision in *Intex Recreation Corp. v. Team Worldwide Corp.*, 860 F. App'x 717 (Fed. Cir. June 21, 2021), although non-precedential, is instructive here. In *Intex*, the Federal Circuit held that:

> The Board misapplied the obviousness standard, and misapprehended Intex's argument, when it fixated on whether the prior art literally disclosed Intex's theory of modifying Parienti only slightly by taking the pump attached to the outside of the mattress and recessing it partially within the mattress. Intex's argument regarding its proposed modification showed that Parienti was already close to the challenged claims, and only a slight change was needed to satisfy the broadest reasonable interpretation of "wholly or partially" recessing a pump. This showing, together with Intex's showing that numerous references since the late 1800s illustrated prior artisans' intuitive desire to recess pumps to save space, satisfied Intex's burden. The Board erred in concluding to the contrary.

Intex Recreation, 860 F. App'x at 723. Like the facts in *Intex*, although no single reference may expressly illustrate Petitioner's theory of a power drive physically (and completely) located between a jacking column and crawler track, Rio's teachings of positioning its rotary actuator on the lifting column along the lifting column axis, and numerous prior art references in the record illustrating prior artisans positioning a rotary actuator over a wheel or crawler track to independently steer the wheel or track, sufficiently

demonstrate that Petitioner's combination of CIII's and Rio's teachings teaches or suggests the subject matter of the "power drive" limitation. *See* Ex. 1006, 5:8–11; Ex. 1007, Fig. 5; Ex. 1009, 7:35–60, Figs. 1–3, 5, 7; Ex. 1011, Fig. 2.

We have considered Patent Owner's arguments, but do not find them sufficient, on the complete trial record, to demonstrate a deficiency in Petitioner's position. As we discuss in this subsection above, we find that Rio, *in light of* Rio's express disclosure *and* the state-of-the-art evidence at least suggests to a person having ordinary skill in the art to position a rotary actuator at the bottom of CIII's jacking column. *Cf. KSR, Int'l*, 550 U.S. at 421 ("A person of ordinary skill is also a person of ordinary creativity, not an automaton.").

We do not agree with Patent Owner that Rio's failure to describe how its actuator would steer a crawler track without using the key/keyway system of the lifting column to connect the actuator to the crawler track is fatal to Petitioner's position. *See* PO Resp. 31. Indeed, as Patent Owner itself recognizes, such a system is "complex." *Id.* at 28, 44 (emphasis omitted); PO Sur-reply 4. As Petitioner and Dr. Singhose explain, a person having ordinary skill in the art would have been motivated to eliminate these complexities by locating the rotary actuator at the bottom of the lifting column, where the actuator could directly steer the crawler track. *See* Pet. 30; Ex. 1002 ¶¶ 53–55.

Patent Owner's argument that Petitioner fails to explain how Rio's express preference for locating its rotary actuator near the top of its lifting column suggests placing the actuator at the bottom of the column misunderstands Petitioner's complete contentions. As we find above, the suggestion comes from a person having ordinary skill in the art, *armed with*

the state-of-the-art evidence, reading Rio's express disclosure of placing the rotary actuator on the lifting column along the lifting column axis. As such, Rio's express disclosure would not be "vague" to a skilled artisan. *See* PO Resp. 30; PO Sur-reply 5. That is, the "prior art . . . collectively . . . guide[s] an artisan of ordinary skill towards" the subject matter of the power drive limitation. *Cf. Unigene Labs., Inc., v. Apotex, Inc.*, 655 F.3d 1352, 1361 (Fed. Cir. 2011) (cited at PO Sur-reply 5).

Also, we find Patent Owner's argument that Petitioner's proposed modification would change Rio's principle of operation inapposite. *See* PO Resp. 31; PO Sur-reply 7–8. As Petitioner argues, it does not propose modifying Rio at all. Instead, Petitioner proposes modifying CIII with Rio's teachings. *See* Pet. Reply 13; *cf., e.g.*, *In re Ratti*, 270 F.2d at 813 (concluding that Chinnery et al., as modified by Jepson, did not render a claim obvious, as "[t]his suggested combination of references would require a substantial reconstruction and redesign of the elements shown in *Chinnery et al.* as well as a change in the basic principles under which the *Chinnery et al.* construction was designed to operate" (emphasis added)) (cited at PO Sur-reply 7–8).

We also do not agree with Patent Owner that Petitioner's proposed combination is a product of hindsight. As we describe above, Petitioner's proposed combination is derived from an express disclosure in Rio as informed by the state-of-the-art evidence. That is, Petitioner's obviousness analysis considers the express teachings of a prior art reference (Rio) as informed by references defining the state-of-the-art prior to the date of the '749 patent. *See In re Cyclobenzaprine Hydrochloride Extended-Release Capsule Patent Litig.*, 676 F.3d 1063, 1073 (Fed. Cir. 2012) (explaining that "hindsight analysis is inappropriate because obviousness must be assessed at

the time the invention was made") (cited in PO Sur-reply 8–9). Also as described above, Petitioner explains how and why the teachings of CIII and Rio would have been combined. *Cf. TriVascular, Inc. v. Samuels*, 812 F.3d 1056, 1066 (Fed. Cir. 2016) ("Although the *KSR* test is flexible, the Board 'must still be careful not to allow hindsight reconstruction of references . . . without any explanation as to how or why the references would be combined to produce the claimed invention.'" (quoting *Kinetic Concepts, Inc. v. Smith & Nephew, Inc.*, 688 F.3d 1342, 1368 (Fed. Cir. 2012))).

Accordingly, upon review of the information in the Petition and corresponding evidence, we find, on the complete record, Petitioner has demonstrated, by a preponderance of the evidence, that CIII, as modified by Rio, discloses the subject matter of the "power drive" limitation.

c) Conclusions–subject matter of claim 1 and Petitioner's reasons to combine

For the reasons presented above, we find that Petitioner demonstrates, by a preponderance of the evidence, that the combination of CIII and Rio discloses the subject matter of claim 1. We further find that Petitioner demonstrates, by a preponderance of the evidence, that a person having ordinary skill in the art would have had reason to combine these teachings and a reasonable expectation of success in doing so. *See* Section III.C.1, *supra* (addressing Petitioner's reasons to combine and Patent Owner's arguments directed to reasonable expectation of success and the state-of-the-art evidence).

d) Secondary considerations

We next turn to Patent Owner' evidence of secondary considerations (or objective evidence of nonobviousness) and Petitioner's rebuttal evidence. Objective evidence of nonobviousness, when present, must be considered as

part of an obviousness inquiry. *Transocean Offshore Deepwater Drilling, Inc. v. Maersk Drilling USA, Inc.*, 699 F.3d 1340, 1349 (Fed. Cir. 2012). Notwithstanding what the teachings of the prior art would have suggested to one of ordinary skill in the art, the totality of the evidence submitted, including objective evidence of nonobviousness, may lead to a conclusion that one or more of the challenged claims would not have been obvious to one of ordinary skill in the art. *In re Piasecki*, 745 F.2d at 1471–72.

(1) Nexus

"In order to accord substantial weight to secondary considerations in an obviousness analysis, the evidence of secondary considerations must have a nexus to the claims, i.e., there must be a legally and factually sufficient connection between the evidence and the patented invention." *Fox Factory, Inc. v. SRAM, LLC*, 944 F.3d 1366, 1373 (Fed. Cir. 2019). "[A] patentee is entitled to a rebuttable presumption of nexus between the asserted evidence of secondary considerations and a patent claim if the patentee shows that the asserted evidence is tied to a specific product and that the product 'is the invention disclosed and claimed.'" *Id.* Applying *Fox Factory*, the Board uses a two-step analysis in evaluating nexus between the claimed invention and the evidence of secondary considerations. *Lectrosonics, Inc. v. Zaxcom, Inc.*, IPR2018-01129, Paper 33 at 33 (PTAB Jan. 24, 2020) (precedential). We first consider whether the patent owner has demonstrated "that its products are coextensive (or nearly coextensive) with the challenged claims," resulting in a rebuttable presumption of nexus. *Id.* at 33. If not, that "does not end the inquiry into secondary considerations"; "the patent owner is still afforded an opportunity to prove nexus by showing that the evidence of secondary considerations is the 'direct result of the unique

characteristics of the claimed invention.'" *Id.* (quoting *Fox Factory*, 944 F.3d at 1373–75).

Patent Owner contends that its "slipform paver lineup with the SmartLeg/AccuSteer technology is coextensive with and embodies the Challenged Claims of the '749 [p]atent." PO Resp. 63; *see also id.* at 63–68 (providing a chart comparing certain claim limitations of the Challenged Claims with annotated images of at least one paver); Ex. 2029 (Breidenbach Decl.) ¶ 34 (providing the same chart).

Petitioner replies that Patent Owner is not entitled to a presumption of nexus because "many of the [C]hallenged [C]laims are directed to a 'swing leg assembly' . . . , which is only a component of a paving machine." Pet. Reply 20. Petitioner also argues that Patent Owner's pavers include other technology not covered by the '749 patent. *Id.* at 21. Petitioner also argues that a presumption of nexus is improper as the four challenged patents before the Board (*see* Section I.C, *supra* (identifying the related proceedings)) vary in scope. *Id.*

Petitioner also argues that Patent Owner's claim chart showing that its pavers are within the scope of the claims does not include two elements from claim 1. Pet. Reply 21.

In its Sur-reply, Patent Owner argues that the unrebutted evidence demonstrates that the asserted objective indicia of nonobviousness "is attributable to [Patent Owner]'s SmartLeg/AccuSteer technology." PO Sur-reply 16. Patent Owner also argues that it established a presumption of nexus "because its SmartLeg/AccuSteer technology incorporated on [Patent Owner]'s slipform paver line is coextensive with and embodies the Challenged Claims of the '749 [p]atent." *Id.* at 21. Patent Owner also argues that "if the unclaimed features amount to nothing more than

additional insignificant features, presuming nexus may nevertheless be appropriate." *Id.* at 22 (quoting *Fox Factory*, 944 F.3d at 1374).

"Whether a product is coextensive with the patented invention, and therefore whether a presumption of nexus is appropriate in a given case, is a question of fact." *Fox Factory, Inc.*, 944 F.3d at 1373. We find that Patent Owner is not entitled to a presumption of nexus. As an initial matter, we do not base this finding on Patent Owner's failure to present a complete claim mapping of claim 1, as Petitioner argues. *See* Pet. Reply 21; PO Resp. 63–68. We recognize that Patent Owner did not map the "crawler track" and "jacking column" limitations to its product. *See* PO Resp. 63–65. Patent Owner, however, identifies these features when addressing the "power drive" limitation. *See id.* at 65; PO Sur-reply 21.

We do find Patent Owner's presentation lacking. Patent Owner fails to identify the product depicted in the chart mapping claim terms to features in the photographs, other than as Patent Owner's "slipform paver lineup." PO Resp. 64–68. Similarly, although Patent Owner states that "[t]he SmartLeg/AccuSteer technology is featured in [its] S400, S600, and S850 line of slipform pavers," Patent Owner does not direct us to any persuasive evidence that all these slipform pavers have this technology and whether each and every paver of these three models includes the technology. *See, e.g.*, Ex. 2045, 1 (listing SmartLeg and AccuSteer as options); Ex. 2019, 2 (listing SmartLeg as an option for the S600). Also, Patent Owner's support for its claim mapping is unpersuasive. Patent Owner references Mr. Breidenbach's declaration, which in turn references a one-page description of the S400 slipform paver, and a listing of patents that cover Patent Owner's products. *See* Ex. 2029 ¶ 34. Patent Owner does not provide any persuasive evidence, for example, that the structures pointed to

and labeled as the angular transducers are indeed such components. *See* Ex. 2029 ¶ 34; *cf.* Exs. 2024, 21; 2045, 1 (neither providing any description of the control system).

Also, "[a] patent claim is not coextensive with a product that includes a 'critical' unclaimed feature that is claimed by a different patent and that materially impacts the product's functionality." *Lectrosonics, Inc.*, IPR2018-01129, Paper 33 at 32 (quoting *Fox Factory*, 944 F.3d at 1375). We also find that Patent Owner has not established that it is entitled to a presumption of nexus because of the presence of critical, unclaimed features. For example, the evidence indicates that the S400, S600, and S850 slipform pavers are each covered by ten U.S. patents. Ex. 2026, 1–2. Additional evidence identifies other critical, unclaimed features of these pavers. *See, e.g.*, Ex. 2045, 1 (indicating that TeleEnd and VariWidth are options on the S400 paver); Ex. 2024, 20 (identifying VariWidth and TeleEnd as patented technologies); Ex. 2014, 1–2 (indicating that VariWidth and TeleEnds are optional features on the S600); Ex. 2015, 1–2 (same); Ex. 2016, 4 (indicating that TeleEnds is a feature on the S600); Ex. 2020, 3 (indicating an S850 with TeleEnds). Also, contrary to Patent Owner's contention, we find that these additional features are not "insignificant." *See* PO Sur-reply 22; *Fox Factory*, 944 F.3d at 1374. As discussed above, VariWidth and TeleEnd are patented technologies, touted in commercial publications.

Patent Owner may still prove nexus by showing that the evidence of secondary considerations is the direct result of the unique characteristics of the claimed invention. We address this nexus with respect to the individual, asserted objective indicia, below.

(2) Long-felt need

Evidence of a long felt but unsolved need tends to show nonobviousness because it is reasonable to infer that the need would have not persisted had the solution been obvious—however, "[a]bsent a showing of long-felt need or the failure of others, the mere passage of time without the claimed invention is not evidence of nonobviousness." *See Iron Grip Barbell Co. v. USA Sports, Inc.*, 392 F.3d 1317, 1325 (Fed. Cir. 2004).

Patent Owner contends that "[i]n the early 2000s, contractors were requesting a slipform paver that could on-the-fly readjust the swing legs and crawler tracks and automatically reposition its swing legs and crawler tracks to enter the transport mode using 90 degree steering." PO Resp. 70–71 (referencing Ex. 2029 ¶ 37; Ex. 2031 ¶¶ 1, 4; Ex. 2032 ¶¶ 1, 4). Patent Owner explained that conventional slipform pavers required manual adjustments to reposition the crawler tracks. *Id.* (referencing Ex. 2029 ¶¶ 37, 38; Ex. 2031 ¶ 5; Ex. 2032 ¶ 3). Patent Owner argued that, given the drawbacks of thee manual adjustments, the industry felt the need to

> (1) reposition each swing leg and crawler track and rotate the crawler tracks to and from a 90 degree steering position without the need to repin the hydraulic steering cylinder; (2) transform the slipform paver from the paving mode to the transport mode, vice versa, using 90 degree steering; and (3) enable a wide range of crawler track steering angles to increase steering maneuverability.

Id. at 71–72 (referencing Ex. 2029 ¶ 39; Ex. 2031 ¶¶ 5–6; Ex. 2032 ¶¶ 1, 4).

Patent Owner argues that Petitioner was attempting to solve the 90-degree steering problem, an attempt that failed. PO Resp. 72–73 (referencing Ex. 2029 ¶ 40; Exs. 2002, 2003, 2011). Patent Owner argues that "Petitioner does not dispute that there was a long-felt need . . . for the invention disclosed and claimed in the '749 [p]atent." PO Sur-reply 15.

Patent Owner appears to argue a nexus between the claim as a whole, the scope of which, Patent Owner argues, allows for rotating crawler tracks to 90-degree positions, and that allows for on-the-fly steering. We find, however, that Patent Owner's evidence of a long-felt need is entitled to little weight. As we discussed above in connection with our claim construction analysis, we conclude that the scope of the Challenged Claims of the '749 patent is broad enough to cover automatic repositioning of a crawler track when the crawler track is off the ground and on-the-fly steering. We find that the prior art already solved any need for a swing leg assembly that automatically positioned a crawler track over 90-degrees, at least when the crawler track is off the ground. *See* Pet. Reply 22 (arguing that the 90-steering and on-the-fly steering were known in the art); Ex. 1006, 7:46–8:65 (describing automatic repositioning of a crawler track of a swing leg); Ex. 1009, 6:26–34 ("[E]ach of the steering spindles 122 includes means to rotate the lower saddle or bogey 124 and the tractors 140 about their vertical axes at least 90° . . . . This rotation can be under finite control and accomplished sequentially, in unison or individually with the machine in motion or standing still as desired."), 7:35–60 (describing rotating a crawler track, automatically, 180 degrees or more with a rotary actuator), 8:27–55 (describing reorienting crawler tracks 90 degrees such that "[w]ith the tractors 140 oriented as shown in F[ig]. 1 the machine can be run upon a trailer and be transported to and from work sites.").

The Federal Circuit's recent decision in *Zaxcom, Inc. v. Lectrosonics, Inc.*, No. 2020-1350, 2022 WL 499843 (Fed. Cir. Feb. 18, 2022), is instructive. The Federal Circuit held that the Board properly found that the objective indicia evidence "says nothing to suggest non-obviousness of one of the two types of systems and methods within the claims' coverage,"

where one of the embodiments within the scope of the claims was found in the prior art. *Zaxcom, Inc.*, 2022 WL 499843, *2. Accordingly, because there was no long-felt unsolved need for an embodiment covered by the claims, Patent Owner does not demonstrate a nexus between the claimed invention and a long-felt need.

Also, even if Patent Owner demonstrated a nexus, we find that this evidence is not entitled to much weight. The record evidence demonstrates that any need arose "in the early 2000s" (Ex. 2031 ¶ 4) or as late as 2009 (Ex. 2032 ¶ 5). The earliest priority claim for the '749 patent is 2010, indicating that not much time passed between an identified need and the claimed invention.

(3) Industry praise

Praise from industry participants, especially competitors, is probative as to obviousness because such participants "are not likely to praise an obvious advance over the known art. Thus, if there is evidence of industry praise of the claimed invention in the record, it weighs in favor of the nonobviousness of the claimed invention." *Apple Inc. v. Samsung Elecs. Co.*, 839 F.3d 1034, 1053 (Fed. Cir. 2016). Patent Owner directs us to evidence of industry praise for its on-the-fly steering and 90-degree steering for transporting its machines. PO Resp. 75–76 (referencing Ex. 2029 ¶¶ 43–45; Ex. 2031 ¶¶ 5–9; Ex. 2032 ¶¶ 1, 4–7; Ex. 2048, 2; Ex. 2049, 14; Ex. 2050, 4). Patent Owner argues that "Petitioner does not dispute that there was . . . industry praise for the invention disclosed and claimed in the '749 [p]atent." PO Sur-reply 15.

We find that the industry praise evidence is not entitled to significant weight. Patent Owner does establish that at least certain praise is directed to the SmartLeg/AccuSteer technology, which is a characteristic of the claims,

that is, this technology corresponds to the on-the-fly steering embodiment covered by the claims. *See* PO Resp. 75–76. None of the evidence, however, demonstrates praise from a competitor, the most compelling evidence. *See Apple Inc.*, 839 F.3d at 1053. Also, the evidence of record, with the exception of two declarations, provides more of an acknowledgment of the SmartLeg/AccuSteer technology, rather than praise. *See* Ex. 2014, 1–2 (describing how SmartLeg and AccuSteer technologies work, but falls short of praising the technologies); Ex. 2015, 2–3 (including similar language as is in Ex. 2014, suggesting the article is more the product of marketing); Ex. 2016, 4; Ex. 2048, 2 (providing a press release from Patent Owner); Ex. 2049, 14 (providing an "article" from Patent Owner); Ex. 2051, 4; Ex. 2052, 3. Also significant in this evidence is that other components are discussed, somewhat limiting the nexus to the claimed invention, and consequently, the weight of the evidence. *See, e.g.*, Ex. 2014, 1–2 (discussing versatility of S600's tractor, TeleEnds, VariWidth); Ex. 2015, 2–3 (same); Ex. 2016, 3 (characterizing the variable paving widths as "important"), 4 (discussing TeleEnds); Ex. 2049, 14 (discussing TeleEnd and double telescopic tractor frame); Ex. 2051, 4 (describing TeleEnds); Ex. 2052, 2–3 (describing dowel bar inserter and PaveSmart 3D package).

We do acknowledge that Mr. Holley characterizes the "SmartLeg / AccuSteer technology [as] a game changer," and Mr. Greenwood called the technology "revolutionary." Ex. 2031 ¶ 7; Ex. 2032 ¶¶ 6, 7. These customers' testimony is entitled to some weight.

In conclusion, we credit Mr. Holley's and Mr. Greenwood's testimony and weigh this testimony in favor of Patent Owner. However, the totality of the evidence identified by Patent Owner does not provide persuasive evidence of industry praise, given the sources of the evidence, the tone of the

language, and, importantly, the positive discussions of other technologies associated with the pavers. As such, we do not give significant weight to this indicium of non-obviousness.

(4) Copying

The fact that a competitor copies technology suggests it would not have been obvious. *See Windsurfing Int'l, Inc. v. AMF, Inc.*, 782 F.2d 995, 1000 (Fed. Cir. 1986) ("[C]opying the claimed invention, rather than one within the public domain, is indicative of non-obviousness.").

> Our [reviewing court's] case law holds that copying requires evidence of efforts to replicate a specific product, which may be demonstrated through internal company documents, direct evidence such as disassembling a patented prototype, photographing its features, and using the photograph as a blueprint to build a replica, or access to the patented product combined with substantial similarity to the patented product.

Wyers v. Master Lock Co., 616 F.3d 1231, 1246 (Fed. Cir. 2010).

Patent Owner argues that "access to an *issued patent* coupled with circumstantial evidence regarding changes to a competitor's design is sufficient to support copying." PO Resp. 77 (citing *Liqwd, Inc. v. L'Oreal USA, Inc.*, 941 F.3d 1133, 1138 (Fed. Cir. 2019)). Patent Owner argues that Petitioner's evidence demonstrates that Petitioner was working on a solution to 90-degree steering, but failed. *Id.* After issuance of a patent in the priority chain of the '749 patent (US 8,459,898 B2, which issued June 11, 2013), [redacted] *Id.* at 77–78 (referencing Exs. 2002, 2003, 2011); *see, e.g.*, Ex. 2003 [redacted].

Patent Owner directs us to internal documents from Petitioner that state Petitioner [redacted]

[redacted] and to [redacted] PO Resp. 78 (referencing Ex. 2054, 3; Ex. 2055, 2) (alteration in original). Patent Owner also provides side-by-side comparisons of the similarities between one of Patent Owner's machines and one of Petitioner's machines, and the marketing terms used for the features. *Id.* at 79–80 (referencing Ex. 2029 ¶¶ 48, 49; Ex. 2009 ¶ 24). Patent Owner also provides a pictorial comparison between one of its machines and Wirtgen's (another competitor's) machine. *Id.* at 81. Patent Owner does not contend that Wirtgen copied Patent Owner's patented technology, nor does Patent Owner contend that Wirtgen had any access to Patent Owner's products or patents. *See id.*

Petitioner replies that [redacted] Pet. Reply 23 (referencing Ex. 1165, which provides the complete document associated with Patent Owner's Exhibit 2003, and includes [redacted]). Petitioner adds that the exhibit also demonstrates that slew drives are cheaper than the Helac actuator. *Id.* at 24 (referencing Ex. 1165, 6). Petitioner also argues that [redacted].[22] *Id.* at 25.

---

[22] Patent Owner argues that "Petitioner does not dispute . . . ***that Petitioner copied G&Z's patented design***." PO Sur-reply 15. As illustrated here, this argument is not correct, as Petitioner does dispute Patent Owner's contentions. To the extent that Patent Owner argues that Petitioner was somehow required to offer witness testimony that it did not copy Patent Owner's design, Patent Owner fails to provide any legal authority for such a requirement. *Cf.* Tr. 81:2–6 ("Copying was unrebutted. I read the reply three times looking for it, and they didn't touch copying, which is remarkable. Any time that someone says that someone else copied your

We find, on the complete record, that Patent Owner's evidence of copying is entitled to little weight. Patent Owner seems to rely on Petitioner's access to an issued patent that discloses slew drives and Petitioner's [redacted] Although [redacted], the Challenged Claims are not limited to a slew drive. Also, Petitioner's engineering notes upon which Patent Owner relies states [redacted] Ex. 1165, 8. This statement, coupled with analyses on [redacted] Indeed, Exhibit 1165, which includes analyses not provided in Exhibit 2003 by Patent Owner, supports a finding that [redacted]. As such, we find that any inference that Petitioner changed its design based on access to Patent Owner's issued patent is weak. *Cf. Liqwd, Inc.*, 941 F.3d at 1137 ("[I]f the only evidence of copying was a competitor's abandonment of one product design and subsequent adoption of a design similar to that of a patented product after issuance of the patent, that did 'not establish that [the competitor] engaged in copying.'") (second alteration in original).

---

design, you think that, number one, they're going to offer a witness that says, absolutely we didn't copy").

[redacted]

We also agree with Petitioner that its document (Ex. 2055) states [redacted] *See* Ex. 2055, 2 (emphasis added). We find, based on our review of the evidence [redacted]

As for the physical similarities between Patent Owner's and Petitioner's commercial machines, most of the similarities identified represent features on CIII. *Compare* Pet. 12–22 (discussing features of CIII), *with* PO Resp. 79–80. One difference between CIII and Petitioner's GP-2400 is the slew drive. Although this similarity may support an inference of copying, the totality of the evidence does not support copying.

Accordingly, based on the complete trial record, Patent Owner fails to provide a nexus between what was allegedly copied (a specific type of power drive, a slew drive) and the Challenged Claims.

(5) Commercial success

"When a patentee can demonstrate commercial success, usually shown by significant sales in a relevant market, and that the successful product is the invention disclosed and claimed in the patent, it is presumed that the commercial success is due to the patented invention." *Galderma Labs., L.P. v. Tolmar, Inc.*, 737 F.3d 731, 740 (Fed. Cir. 2013). "[I]f the commercial success is due to an unclaimed feature of the device, the commercial success is irrelevant. So too if the feature that creates the commercial success was known in the prior art, the success is not pertinent." *Ormco Corp. v. Align Tech., Inc.*, 463 F.3d 1299, 1312 (Fed. Cir. 2006) (footnote omitted).

Patent Owner contends that introducing the SmartLeg/AccuSteer technology "translat[ed] directly into commercial success in the form of significantly increased paver sales, [sales] driven by those designs equipped with the SmartLeg/AccuSteer technology." PO Resp. 81–82 (referencing Ex. 2029 ¶ 51, which references Ex. 2037). Patent Owner contends that its market share eroded when Petitioner entered the market. *Id.* at 82 (referencing Ex. 2029 ¶ 52, which references Ex. 2035, 13; Ex. 2036, 10).

Patent Owner concludes that, because Patent Owner demonstrated significant sales of its S400, S600, and S850 slipform pavers, and these "successful product[s are] the invention disclosed and claimed in the patent, it is presumed that the commercial success is due to the patented invention." PO Resp. 83 (alteration in original).

Petitioner replies that Patent Owner's commercial success evidence relies on market share reports (Exs. 2035 and 2036) based on Mr. Van Broekhoven's personal knowledge. Pet. Reply 25; *see* Ex. 2034 ¶ 1 (providing declaration of Mr. Van Broekhoven, stating that he is "the author of the documents marked Exhibits 2035 and 2036," that he "prepared the reports based upon [his] personal knowledge and belief"). Petitioner argues that Mr. Van Broekhoven provides no underlying basis for his testimony. Pet. Reply 25. Petitioner also argues that Exhibit 2037, which also forms the basis for Patent Owner's commercial success contentions, "contains conclusory allegations about sales allegedly lost to [Petitioner], [Patent Owner]'s alleged production capacity, adding patents online, and several allegations about [Petitioner]'s product lines." *Id.* at 25–26 (referencing Ex. 2037, 9, 11–12). Petitioner argues that "[t]here is no support in Ms. Ismaylova's declaration showing how or where she obtained this additional information." *Id.* at 26; *see* Ex. 2033 (providing Ms. Ismaylova's

declaration, which states that she "personally collected the sales data in" Ex. 2037).

Petitioner also argues that evidence demonstrates that Patent Owner's sales declined for a number of reasons, including Wirtgen entering the U.S. market, Patent Owner's machines not having features that matched demand, Patent Owner's lack of a sales and distribution network, Patent Owner's lack of brand recognition and inconsistent quality, and Patent Owner's inability to meet delivery schedules. Pet. Reply 27.

Patent Owner replies that Petitioner did not object to Patent Owner's evidence, did not cross-examine the declarants, and did not offer rebuttal evidence. PO Sur-reply 19. Patent Owner argues that "not a single customer canceled an order despite a delivery delay." *Id.* at 20.

We find, on the complete record, that Patent Owner's commercial success evidence is entitled to very little weight. First, we find that Patent Owner has not established a nexus between the claimed invention and its paver sales. As we discuss above, contrary to Patent Owner's assertion, it is not entitled to a presumption of nexus. Again, as seen in the record evidence, other significant features, such as VariWidth and TeleEnds are components of these pavers. For example, one of Patent Owner's marketing documents touts its "[e]xclusive industry proven and requested options include[ing] AccuSteer, Smartleg, TeleEnd, VariWidth and more." Ex. 2024, 20; *see id.* at 21 (touting EGON operator control system, which Patent Owner claims makes it "easier to operate, reconfigure, diagnose, and manage a piece of concrete paving equipment"). In another example, Zachry Construction, a customer of Patent Owner, attributes success to the "dowel bar inserter (DBI) and a Leica PaveSmart 3D stringless machine control system." Ex. 2052, 2. "The DBI played a major role in Zachry's

decision to buy the new paver." *Id.* at 2–3. "Another reason Zachry bought the . . . paver is for the telescoping ends on the machine." *Id.* at 3; *see also id.* (discussing the Leica PaveSmart 3D stringless machine control system). *Cf.* Ex. 2037, 6 (showing delivery of an S850 to Zachry).

Other evidence also fails to demonstrate persuasively a nexus between the commercial success and the SmartLeg/AccuSteer technology. For example, we find that, with the exception of 2016 and 2017, Patent Owner's total annual paver sales were consistent over the time period identified by Patent Owner. *See* PO Resp. 82 (illustrating sales in chart). For example, evidence of record shows that the entire concrete paving industry, covering all types of pavers, experienced growth from 2014 to a peak in 2018, with a decrease in 2019. *See* Ex. 2036, 5–6. Also, the sales data shows comparable annual sales of non-swing leg pavers prior to 2010 (nine in 2002, ten in 2008) as total sales in some years after 2010 (eight in 2010, 12 in 2013, eight, in 2014, ten in 2015).

The record evidence does show a decrease in the complex paver segment market share—the segment in which Patent Owner operates—for 2014 as compared to 2019, for Patent Owner and an almost commensurate increase by Petitioner. *See* Ex. 2036, 15. Patent Owner fails to provide persuasive evidence, however, that this change in market share is attributable to Petitioner selling complex pavers that include the claimed patent features. Sales had already decreased from twenty pavers in 2017, to six in 2019, when Petitioner began selling the paver that Patent Owner alleges copies its technology. *See* PO Resp. 82; *see also id.* at 78–79 (identifying the GP-2400); Ex. 2029 ¶ 48 (same); Ex. 2009 ¶ 24 (same). Patent Owner does not direct us to any evidence that the GP-3 and GP-4

pavers include the patented technology, and that sales were lost due to these machines.

(6) Conclusion – secondary considerations

We find, based on the complete record and the totality of the evidence directed to objective indicia of nonobviousness, that this evidence is entitled to some, but not significant, weight.

e) Conclusion

For the reasons discussed above, we weigh the underlying factual findings in our obviousness analysis in claim 1 and, based on this weighing of evidence, we conclude that Petitioner has demonstrated, by a preponderance of the evidence, that claim 1 is unpatentable under 35 U.S.C. § 103 over CIII and Rio.

3. Independent claim 17

Independent claim 17 differs from claim 1 in that it further recites additional components of a paving machine, including a "module frame" and a "two or more swing leg assemblies," with each assembly including the elements recited in claim 1. Ex. 1001, 23:54–24:33. Petitioner relies on similar contentions as made for claim 1 in asserting that claim 17 is unpatentable over CIII and Rio, and relies on CIII's four-leg configuration. *See* Pet. 65–75.

a) Additional features of claim 17

Claim 1 recites a swing leg assembly, and claim 17 recites "[a] paving machine" with "two or more swing leg assemblies." *Compare* Ex. 1001, 22:40–67, *with* 23:54–24:33. The swing leg assemblies in each of these claims recite similar subject matter. *See id.* at 22:40–67, 23:54–24:33. Additionally, claim 17 recites "a module frame." *See id.* at 24:1.

Petitioner contends that CIII, in its four-leg configuration, includes a module frame (Pet. 66–67 (referencing Ex. 1005, 6-4, 6-11, 6-55, 7-3; Ex. 1002 ¶ 105)), and two or more swing legs (*Id.* at 68–70 (referencing Ex. 1005, 6-6, 6-11, 6-55, 7-3; Ex. 1002 ¶ 106)).

Patent Owner does not dispute Petitioner's contentions with respect to these additional features. *See* PO Resp. 25–45 (addressing independent claims 1 and 17 together).

b) Conclusions as to claim 17

We have reviewed Petitioner's contentions with respect to independent claim 17 and, based on this review and our analysis of claim 1 (including secondary considerations), discussed above, and conclude, based on our weighing of the underlying facts, that Petitioner has demonstrated, by a preponderance of the evidence, that claim 17 is unpatentable under 35 U.S.C. § 103 over CIII and Rio.

4. Dependent claims 2–11, 13–16, 19, and 20

Dependent claims 2–11, 13–16, 19, and 20 depend, directly or indirectly, from independent claims 1 or 17. We address the scope of the prior art, and the differences between the claimed invention and the prior art, for each dependent claim, below. Patent Owner does not individually dispute any of Petitioner's contentions with respect to these dependent claims. *See* PO Resp. 45 ("For at least these reasons [directed to claim 1], . . . [i]ndependent [c]laims 1 and 17 and their dependents are therefore patentable over the proposed modification").

a) Claim 2

Claim 2 depends from claim 1 and recites "a hinge bracket arranged to be interposed between the swing leg and the surface of the module frame." Ex. 1001, 23:1–3. Petitioner contends that CIII discloses a hinged bracket

arranged as recited. Pet. 53–54 (referencing Ex. 1005, 3-14, 3-23; Ex. 1002 ¶ 87). This contention is supported by annotated images from CIII. *See id.*

Based on our review of the complete trial record, including the identified evidence, we find that CIII discloses the subject matter of claim 2.

b) Claim 3

Claim 3 depends from claim 2, and requires the hinged bracket to "comprise[] the upright pivot shaft and permits pivotal movements of the swing leg relative to the hinge bracket about a second upright axis in a substantially horizontal plane, the hinge bracket including a pivot connection point that is laterally spaced from and fixed in relation to the pivot shaft." Ex. 1001, 23:4–10. Petitioner contends that CIII discloses the hinged bracket arranged as recited. Pet. 54–57 (referencing Ex. 1005, 3-17–18, 3-23; Ex. 1002 ¶¶ 88–91). This contention is supported by annotated images from CIII. *See id.*

Based on our review of the complete trial record, including the identified evidence, we find that CIII discloses the subject matter of claim 3.

c) Claim 4

Claim 4 depends from claim 2, and recites "a hydraulic actuator mounted between the hinge bracket and the swing leg, permitting the swing leg to pivot relative to the module frame." Ex. 1001, 24:11–14. Petitioner contends that CIII discloses a hydraulic actuator arranged as recited. Pet. 57–58 (referencing Ex. 1005, 3-14, 3-17–18; Ex. 1002 ¶ 92). This contention is supported by annotated images from CIII. *See id.*

Based on our review of the complete trial record, including the identified evidence, we find that CIII discloses the subject matter of claim 4.

d) Claim 5

Claim 5 depends from claim 4, and recites "wherein the hydraulic actuator is configured to be disengaged from at least one of the hinge bracket and the swing leg when the swing leg is positioned in a transport orientation." Ex. 1001, 23:15–18. Petitioner directs us to its analysis for an element of claim 18 reciting comparable subject matter as claim 5 in its contention that claim 5 is obvious (although claim 18 is not challenged under Ground 1, Petitioner provides analysis, on which it later relies in Ground 2). Pet. 81. Petitioner contends that CIII discloses that, in a transport orientation, turnbuckles are removed. *Id.* at 79 (referencing Ex. 1005, 6-55–56). Petitioner contends that a person having ordinary skill in the art "would have recognized that for swing-leg assemblies with linear actuators, those actuators likewise would need to be removed to prevent them from interfering with the swing-leg's path to transport position." *Id.* at 80 (referencing Ex. 1005, 3-14 (disclosing the "maximum left position" of the swing-leg assembly); Ex. 1002 ¶ 122). Petitioner contends that this understanding is supported by CIII disclosing removing the turnbuckles. Petitioner concludes that "[i]t would have been obvious to provide more range of motion in CIII's transport mode by disengaging each linear actuator from the hinge bracket and swing legs, thereby allowing each swing leg to pivot to the end of the frame." *Id.* (referencing Ex. 1005, 6-55–56; Ex. 1002 ¶ 122).[23]

Based on our review of the complete trial record, including the identified evidence and Petitioner's reasoning, we find that CIII discloses the subject matter of claim 5.

[23] We rely on this analysis in addressing claim 18 for Ground 2, below.

e) Claim 6

Claim 6 depends from claim 2 and recites "wherein the hinge bracket is arranged to be interposed between the swing leg and the surface of the module frame, wherein the second angular position transducer is positioned between the swing leg and the hinge bracket, and wherein the second signal is indicative of the angular orientation of the swing leg." Ex. 1001, 23:19–24. Petitioner relies on its position for claim 2 in support of its contention that CIII discloses subject matter of claim 6. Pet. 58. Petitioner also contends that Rio's pivot sensor 83, the alleged second angular position transducer, emits a second signal as recited. *Id.* at 59. Petitioner contends that, given the nature of how sensor 83 is employed on Rio's machine, "it would have been obvious to associate the sensor with the upright pivot shaft of CIII's hinge bracket such that the sensor is positioned between the swing leg and hinge bracket." *Id.* (referencing Ex. 1002 ¶ 95).

Based on our review of the complete trial record, including the identified evidence and Petitioner's reasoning, we find that the combination of teachings from CIII and Rio discloses the subject matter of claim 6. We discuss Petitioner's reasons for combining Rio's control system with CIII machine above, in connection with our analysis of claim 1.

f) Claim 7

Claim 7 depends from claim 1 and recites "a feedback for maintaining the orientation of the crawler track independently of angular inclinations of the crawler track relative to the module frame." Ex. 1001, 23:25–28. Petitioner contends that CIII and Rio disclose feedback loops for orienting a crawler track. Pet. 59–60 (referencing Ex. 1005, 8-105–106; Ex. 1006, 8:38–47; Ex. 1002 ¶¶ 96, 97).

Petitioner contends that a person having ordinary skill in the art "would have understood that this feedback control occurs independently of the track's angular inclination relative to the frame." Pet. 60 (referencing Ex. 1002 ¶ 97). Petitioner adds that "Rio's feedback system, however, 'continuously' regulates the crawler track's rotational position as the leg pivots regardless of the crawler track's inclination position." *Id.* (referencing Ex. 1006, 8:38–47).

Based on our review of the complete trial record, including the identified evidence and Petitioner's reasoning, we find that the combination of teachings from CIII and Rio discloses the subject matter of claim 7. We discuss Petitioner's reasons for combining Rio's control system with CIII machine above, in connection with our analysis of claim 1.

g) Claim 8

Claim 8 depends from claim 1, and recites "wherein the control signal maintains the crawler track in a transport orientation." Ex. 1001, 23:29–30. Petitioner contends that CIII discloses a machine configured in a transport orientation. Pet. 81 (referencing Ex. 1005, 6-55–56). Petitioner contends that a person having ordinary skill in the art "would have found it obvious in view of Rio['s teaching of controller 32] to modify CIII so that the control signal referenced in [claim 1] maintains the crawler tracks in a transport orientation when the swing legs are in the transport orientation to facilitate loading and unloading of the paver." *Id.* at 81–82 (referencing Ex. 1006, 9:15–42; Ex. 1002 ¶¶ 127–128).

Based on our review of the complete trial record, including the identified evidence and Petitioner's reasoning, we find that the combination of teachings from CIII and Rio disclose the subject matter of claim 8. We

discuss Petitioner's reasons for combining Rio's control system with CIII machine above, in connection with our analysis of claim 1.

h) Claim 9

Claim 9 depends from claim 1 and recites "wherein the control signal maintains the crawler track in a paving orientation." Ex. 1001, 23:31–32. Petitioner contends that a person having ordinary skill in the art would have understood that Rio's control signal would maintain the orientation of the CIII's crawler tracks when paving. Pet. 60–61 (referencing Petitioner's analysis of the control system elements of claim 1; Ex. 1002 ¶ 98).

Based on our review of the complete trial record, including the identified evidence and Petitioner's reasoning, we find that the combination of teachings from CIII and Rio discloses the subject matter of claim 9. We discuss Petitioner's reasons for combining Rio's control system with CIII machine above, in connection with our analysis of claim 1.

i) Claim 10

Claim 10 depends from claim 1 and recites "an angular crawler track adjuster for changing an angular, rotational inclination between the crawler track and the swing leg in a substantially horizontal plane." Ex. 1001, 23:33–36. Petitioner contends that both CIII and Rio disclose actuators for adjusting the angular position of a crawler track. Pet. 61. Petitioner contends that a person having ordinary skill in the art "would have understood that both actuators are 'angular crawler track adjuster[s]' when implemented on CIII's jacking column, which is fixed to the swing leg, because they drive changes to an angular, rotational inclination between the crawler track and the swing leg in a substantially horizontal plane." *Id.* (referencing Ex. 1005, 5-35, 5-37; Ex. 1002 ¶ 99; analysis of the "power drive" limitation of claim 1).

Based on our review of the complete trial record, including the identified evidence and Petitioner's reasoning, we find that the combination of teachings from CIII and Rio disclose the subject matter of claim 10. We discuss Petitioner's reasons for combining Rio's control system with CIII machine above, in connection with our analysis of claim 1, the system used to adjust the angular, rotational inclination of the crawler track.

j) Claim 11

Claim 11 depends from claim 1, and recites "wherein the power drive comprises a slew gear drive." Ex. 1001, 23:37–38. Petitioner contends that Rio discloses that its rotary actuator can be a worm drive, which is the same as a slew drive. Pet. 62 (referencing Ex. 1006, 4:61–5:3; Ex. 1013, 84:12–86:17; Ex. 1001, 11:35–52; Ex. 1002 ¶ 100).

Based on our review of the complete trial record, including the identified evidence, we find that Rio discloses the subject matter of claim 11.

k) Claim 13

Claim 13 depends from claim 1, and recites "wherein the swing leg is movably connected to the module frame and is movable in a lateral direction." Ex. 1001, 23:43–45. Petitioner contends that CIII discloses a swing leg arranged as recited. Pet. 62–63 (referencing Ex. 1005, 3-14, 3-17; Ex. 1002 ¶ 101). This contention is supported by an annotated image from CIII. *See id.*

Based on our review of the complete trial record, including the identified evidence, we find that CIII discloses the subject matter of claim 13.

l) Claim 14

Claim 14 depends from claim 1, and recites "wherein the swing leg assembly is removably coupled to the module frame." Ex. 1001, 23:46–47. Petitioner contends that CIII discloses a swing leg assembly that is removable from the frame. Pet. 63–64 (referencing Ex. 1005, 6-6; Ex. 1002 ¶ 102). This contention is supported by an annotated image from CIII. *See id.* at 64.

Based on our review of the complete trial record, including the identified evidence, we find that CIII discloses the subject matter of claim 14.

m) Claims 15 and 19

Claim 15 depends from claim 1, and recites "wherein the swing leg is configured to change orientation by up to 90° relative to the module frame." Ex. 1001, 23:48–50. Claim 19 depends from claim 17 and recites the same subject matter. *Id.* at 24:51–53. Petitioner contends that "CIII discloses each swing leg is configured to change orientation by up to 90° relative to the module frame when the swing legs are rotated from paving orientation to transport orientation." Pet. 82–83 (referencing Ex. 1005, 6-6, 6–11, 6-55–56; Ex. 1002 ¶ 129). Petitioner contends that a person having ordinary skill in the art "would have recognized that CIII's paver modified in view of Rio would likewise be capable of rotating the swing legs up to 90° by either using Rio's rotary actuator 42 to rotate the swing leg, . . . or disengaging the linear actuator before rotating the swing leg." *Id.* at 83 (referencing analyses for claim 1 and 18; Ex. 1002 ¶ 130).

Based on our review of the complete trial record, including the identified evidence and Petitioner's reasoning, we find that the combination of teachings from CIII and Rio discloses the subject matter of claims 15 and

19. We discuss Petitioner's reasons for combining Rio's control system with CIII machine above, in connection with our analysis of claim 1, the system used to adjust the angular, rotational inclination of the crawler track and swing leg.

n) Claims 16 and 20

Claims 16 depends from claim 1, and recites "wherein the swing leg is configured to change orientation by up to 180° relative to the module frame." Ex. 1001, 23:51–53. Claim 20 depends from claim 17 and recites the same subject matter. *Id.* at 24:54–56. Petitioner contends that "[i]t would have been obvious to implement Rio's rotary actuator 42 to rotate CIII's swing legs in four-track configuration." Pet. 84. Petitioner contends that a person having ordinary skill in the art "would have known that rotary actuators like Rio's permit more range of motion than linear-actuator designs and allow swing legs to rotate up to 180°." *Id.* (referencing Ex. 1002 ¶ 131; Ex. 1009, 7:35–60, Fig. 7). Petitioner reasons that a person having ordinary skill in the art would have included actuator 42 to "permit each swing leg to change orientation by up to 180° relative to the module frame." Ex. 1002 ¶¶ 131–132.

Based on our review of the complete trial record, including the identified evidence and Petitioner's reasoning, we conclude that the combination of teachings from CIII and Rio discloses the subject matter of claims 15 and 19. We agree that, from Rio's teachings, a person having ordinary skill in the art would have modified CII to allow for the swing leg to be configured to change orientation by up to 180° relative to the module frame.

o) Conclusion – dependent claims 2–11, 13–16, 19, and 20

We have reviewed Petitioner's contentions with respect to these dependent claims and conclude, on the complete trial record, and based on the above findings (including findings related to the limitations of claims 1 and 17, and secondary considerations), that Petitioner demonstrates, by a preponderance of the evidence, that dependent claims 2–11, 13–16, 19, and 20 are unpatentable under 35 U.S.C. § 103 over CIII and Rio.

D. Grounds 2 and 5: Claim 18 as unpatentable over CIII, Rio, and Smolders (Ground 2), and Claims 11 and 12 as unpatentable over CIII, Rio, and Widdrington (Ground 5)

1. Ground 2

Petitioner contends that claim 18, which depends directly from claim 17, is unpatentable over CIII, Rio, and Smolders. Pet. 75–80. Petitioner's analysis references its analysis for claim 3. *Id.* at 78–79.

The only subject matter of claim 18 not addressed above requires including a hinged bracket and hydraulic actuator on two or more swing legs. *See* Pet. 75–78, 79–80. Petitioner contends that Smolders discloses hinged brackets on multiple swing legs. *Id.* at 77–78. Petitioner contends that a person having ordinary skill in the art "would have understood from Smolders that, where a paver has multiple swing-leg assemblies, such as CIII's four-track configuration, connecting each swing-leg assembly to the paver's frame with a hinge bracket allows each swing-leg assembly to be easily attachable/detachable." *Id.* at 78 (referencing Ex. 1002 ¶ 117). That is, when employing the four-leg configuration of CIII, a person having ordinary skill in the art would have included the hinged brackets of CIII on at least two swing legs, as taught by Smolders.

See also our analysis of claims 3 and 5, above, which addresses the subject matter of claim 18. *See id.* at 78–79 (referencing analysis of claim 3 for Ground 1); 81 (relating the analysis of claim 5 with the analysis of claim 18, which we address above). Patent Owner does not make any arguments directed specifically to claim 18.

We have reviewed Petitioner's contentions with respect to claim 18, and conclude, on the complete trial record, including the identified evidence and based on the above findings (including findings related to the limitations of claims 1, 3, 5, and 17, and secondary considerations), that Petitioner demonstrates, by a preponderance of the evidence, that dependent claim 18 is unpatentable under 35 U.S.C. § 103 over CIII, Rio, Smolders.

2. Ground 5

Claim 11 depends from claim 1, and recites "wherein the power drive comprises a slew gear drive." Ex. 1001, 23:37–38. Claim 12 depends from claim 1, and recites "wherein the power drive comprises first and second, diametrically opposed helical worm drives engaging and driving a ring gear disposed between them." *Id.* at 23:39–42. Petitioner contends that claims 11 and 12 are unpatentable over CIII, Rio, and Widdrington. Pet. 106–110. Petitioner contends that a person having ordinary skill in the art "would have understood that delivering torque to [Widdrington's] worm gear 68, (the ring gear), using more than one worm shaft member 69, (worm drive), would permit using smaller worm drives instead of having to use one large worm drive to deliver the desired torque, leading to a more compact design." *Id.* at 106–107 (referencing Ex. 1008, 1:13–18, 6:17–21; Ex. 1002 ¶ 183). Petitioner adds that an artisan of ordinary skill "would have known that using two worm drives to provide balanced torque (as taught by Widdrington) would reduce the wear and tear of the ring gear caused by its

engagement with the helical worm drives, reducing maintenance and/or repair costs associated with the rotary actuator." *Id.* at 107 (referencing Ex. 1008, 1:13–30, 6:27–30; Ex. 1002 ¶ 183).

Petitioner concludes that a person having ordinary skill in the art would have been motivated to employ drives like those disclosed in Widdrington "to achieve a more compact design and reduced operational and maintenance costs." Pet. 107 (referencing Ex. 1002 ¶ 183). Petitioner contends that these drives "are capable of high gear-reduction ratios" to allow the ring gear to be easily turned by the worm drives, but not by incidental forces, preventing unwanted rotation of the crawler track. *Id.* (referencing Ex. 1002 ¶ 184). Petitioner contends that employing "Widdrington's dual worm-gear drive rotary actuator on CIII's slipform paver . . . would have involved a combination of well-known prior-art elements according to known methods and yielded predictable results." *Id.* at 108 (referencing Ex. 1002 ¶ 185).

Petitioner contends that Widdrington's drive is a slew drive. Pet. 108–109 (referencing Ex. 1008, 1:9–12, 6:1–5, 6:13–16 (by cross reference to Petitioner's description of Widdrington), Fig. 10; Ex. 1002 ¶ 187). Petitioner also contends that the drive depicted in Widdrington's Figure 10 "is a gear drive mechanism comprising first and second, diametrically opposed helical worm drives engaging and driving a ring gear disposed between them." *Id.* at 109–110 (referencing Ex. 1008, Fig. 10; Ex. 1002 ¶ 189); *see id.* at 110 (showing annotated image of Widdrington's Figure 10).

Patent Owner does not independently address Petitioner's contentions with respect to claims 11 and 12.

We find, based on the complete record, that Petitioner has demonstrated, by a preponderance of the evidence, that a person of ordinary skill would have had reason to modify the combined teachings of CIII and Rio to include the gear drive mechanisms taught by Widdrington. We also find, based on our review of Petitioner's evidence, and specifically Widdrington and Dr. Singhose's testimony, that Widdrington discloses the subject matter of claims 11 and 12.

Based on our findings based on Petitioner's contentions with respect to these claims (and findings related to claim 1, including secondary considerations), on the complete record, we conclude that Petitioner demonstrates, by a preponderance of the evidence, that dependent claims 11 and 12 are unpatentable under 35 U.S.C. § 103 over CIII, Rio, and Widdrington.

E. Grounds 3, 4, and 6: Littman grounds

Petitioner contends that claims 1–10, 13–17, 19, and 20 are unpatentable under 35 U.S.C. § 103 over CIII and Littman. Pet. 5, 84–103, 104–105 (Ground 3). Petitioner also contends that claim 18 is unpatentable under 35 U.S.C. 103 over CIII, Littman, and Smolders (Ground 4), and that claims 11 and 12 are unpatentable under 35 U.S.C. § 103 over CIII, Littman, and Widdrington (Ground 6). Pet. 5, 103–104, 106–110. Because we determine that all Challenged Claims have been proven unpatentable under the CIII-Rio grounds, we do not address the CIII-Littman grounds. *See SAS Inst. Inc. v. Iancu*, 138 S. Ct. 1348, 1359 (2018) (holding a petitioner "is entitled to a final written decision addressing all of the claims it has challenged"); *Boston Sci. Scimed, Inc. v. Cook Grp. Inc.*, 809 F. App'x 984, 990 (Fed. Cir. 2020) (nonprecedential) ("We agree that the Board need not

address [alternative grounds] that are not necessary to the resolution of the proceeding.”).

IV. CONCLUSION

After considering all the evidence and arguments presently before us, we determine Petitioner has demonstrated, by a preponderance of the evidence, that the Challenged Claims are unpatentable.[24]

[24] Should Patent Owner wish to pursue amendment of the Challenged Claims in a reissue or reexamination proceeding subsequent to the issuance of this decision, we draw Patent Owner’s attention to the April 2019 Notice Regarding Options for Amendments by Patent Owner Through Reissue or Reexamination During a Pending AIA Trial Proceeding, 84 Fed. Reg. 16,654 (Apr. 22, 2019). If Patent Owner chooses to file a reissue application or a request for reexamination of the challenged patent, we remind Patent Owner of its continuing obligation to notify the Board of any such related matters in updated mandatory notices. *See* 37 C.F.R. §§ 42.8(a)(3), (b)(2).

In summary:

Claims	35 U.S.C. §	Reference(s)/ Basis	Claims Shown Unpatentable	Claims Not Shown Unpatentable
1–11, 13–17, 19, 20	103	CIII, Rio	1–11, 13–17, 19, 20	
18	103	CIII, Rio, Smolders	18	
11, 12	103	CIII, Rio, Widdrington	11, 12	
1–11, 13–17, 19, 20	103	CIII, Littman[25]		
18	103	CIII, Littman, Smolders[25]		
11, 12	103	CIII, Littman, Widdrington[25]		
Overall Outcome			1–20	

[25] As explained above, we do not reach this asserted ground. *See* § III.E.

V. ORDER

In consideration of the foregoing, it is hereby:

ORDERED that Petitioner has proven by a preponderance of the evidence that claims 1–11, 13–17, 19, and 20 of U.S. Patent No. 10,029,749 B2 are unpatentable over CIII and Rio;

FURTHER ORDERED that Petitioner has proven by a preponderance of the evidence that claim 18 of U.S. Patent No. 10,029,749 B2 is unpatentable over CIII, Rio, and Smolders; and

FURTHER ORDERED Petitioner has proven by a preponderance of the evidence that claims 11 and 12 of U.S. Patent No. 10,029,749 B2 are unpatentable over CIII, Rio, and Widdrington;

FURTHER ORDERED that, pursuant to 35 U.S.C. § 318(b), upon expiration of the time for appeal of this decision, or the termination of any such appeal, a certificate shall issue canceling claims 1–20 of U.S. Patent No. 10,029,749 B2;

FURTHER ORDERED that the parties shall file, within 10 days of entry of this Decision, a joint motion to seal this Decision, and shall provide, along with the joint motion, an exhibit with a proposed redacted public version of this Decision; and

FURTHER ORDERED that, because this is a Final Written Decision, parties to the proceeding seeking judicial review of the decision must comply with the notice and service requirements of 37 C.F.R. § 90.2.

For PETITIONER:

Jason Stach
Luke McCammon
David Mroz
Sonja Sahlsten
Robert High
FINNEGAN HENDERSON FARABOW GARRETT & DUNNER LLP
jason.stach@finnegan.com
luke.mccammon@finnegan.com
david.mroz@finnegan.com
sonja.sahlstren@finnegan.com
robert.high@finnegan.com

For PATENT OWNER:

James Hannah
Jeffrey Price
KRAMER LEVIN NAFTALIS & FRANKEL LLP
jhannah@kramerlevin.com
jprice@kramerlevin.com