S850

MID-SIZE SLIPFORM PAVER

Paving Range: nom. 12 - 41ft (3.65 - 12.5m)
Available with Compact Dowel Bar Inserter (CDBI)

THE ULTIMATE PAVING SYSTEM

EGON OPERATOR CONTROL SYSTEM

EGON incorporates an intuitive user interface with user friendly features allowing remote monitoring, diagnostics and troubleshooting to maximize available paving time via the Telematics fleet management system.

POWER UNIT

A powerful 415 hp (309 kW) US EPA Tier 4f / EU Stage V, low emissions diesel engine offers incredible operating economy. A 350 hp (261 kW) Tier 3 / EU Stage IIIA engine is also available.

JACKING COLUMNS / LEGS

With its unique, high-lift jack design, long service life and low maintenance cost is ensured, along with precision steering and elevation control even on the thickest slabs.

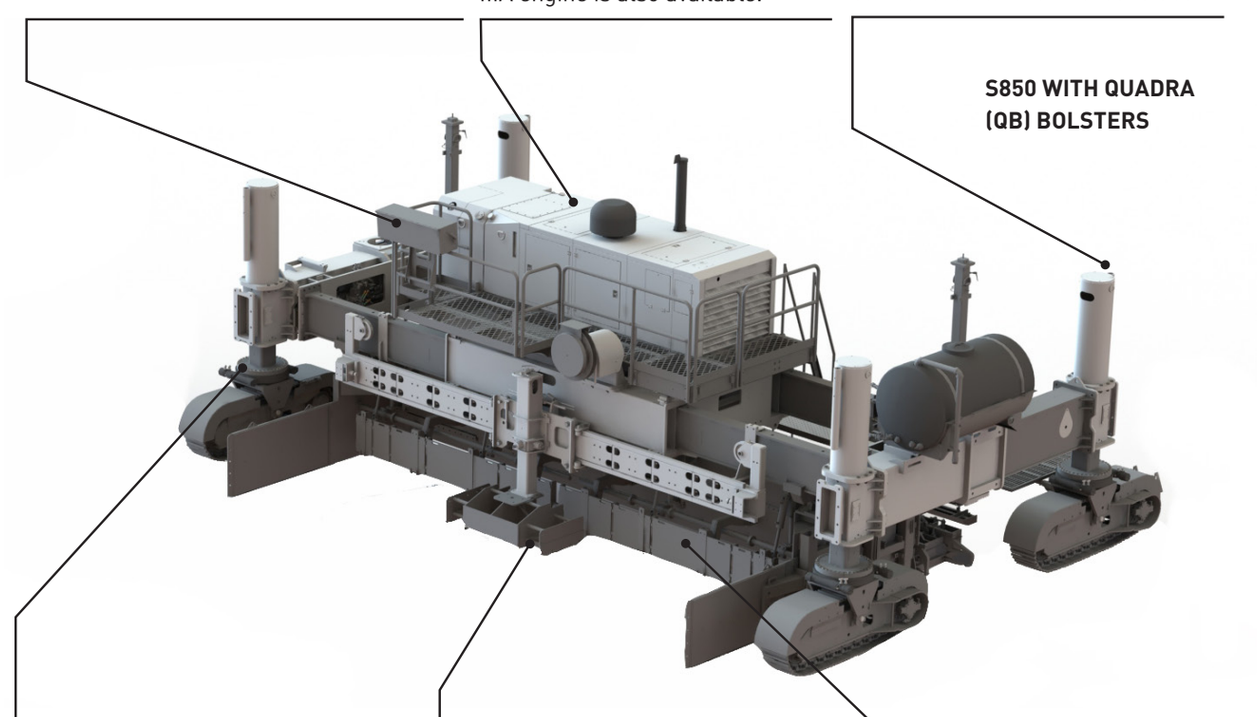

ACCUSTEER

Allows the operator to independently rotate each crawler track 90 degrees to the direction of travel, steer in the 90 degree mode and synchronize them, to provide unparalleled paver maneuverability on site, and loading/ unloading, and changing width.

SPREADER PLOW

A powerful concrete spreader plow moves more concrete faster at lower cost, and more effectively and safely than an auger. It also speeds width change and helps you get off the header faster in the morning.

METERING GATE

The metering gate is designed to strike off the concrete ahead of the conforming pan and control concrete head height over the vibrators. A metering gate assists in achieving smooth concrete.

GUNTERT QUALITY, ENDLESS APPLICATIONS

The G&Z S850 is a versatile mid-size paver designed to be the paver of choice for all your paving needs from 12ft to 34ft (3.65m - 10.36m). With optional bolt-in tractor frame extensions, the S850 paver is capable of paving widths up to 41ft (12.5m). The S850 is agile enough for economic use on cut up urban and residential paving projects without sacrificing the weight, power, and balance required to produce a superior ride on highway and airport concrete pavements. Investment in updated technology has never been more compelling. Recent updates on the S850 paver include a power unit featuring a quiet, fuel efficient, low emissions diesel engine, improved accessibility without sacrificing operator comfort or visibility around the machine, including into the concrete liquification hopper underfoot. Combined with the higher horsepower engine and reinforced tractor frame, the S850 can pave wider than ever before.

Patent Owner, Guntert & Zimmerman - Ex. 2001, p. 2

UNIVERSAL BOLTING PATTERN

The universal bolting pattern on the tractor center module and bolsters allows options and paving kit to attach / detach easily and securely in different machine configurations.

DOUBLE TELESCOPIC TRACTOR FRAME

The double telescopic, single stage per side tractor frame allows a quick width change from 12ft to 26ft (3.65m to 7.92m)*. With the optional bolt-in tractor frame sections, the maximum paving width is 41ft (12.5m).

SMARTLEG (OPTIONAL)

The SmartLeg system allows the operator or ground person to adjust the bolster swing leg angle and maneuver around obstacles on the fly, while keeping the crawler track straight ahead. The SmartLeg feature also speeds preparing a paver for transport.

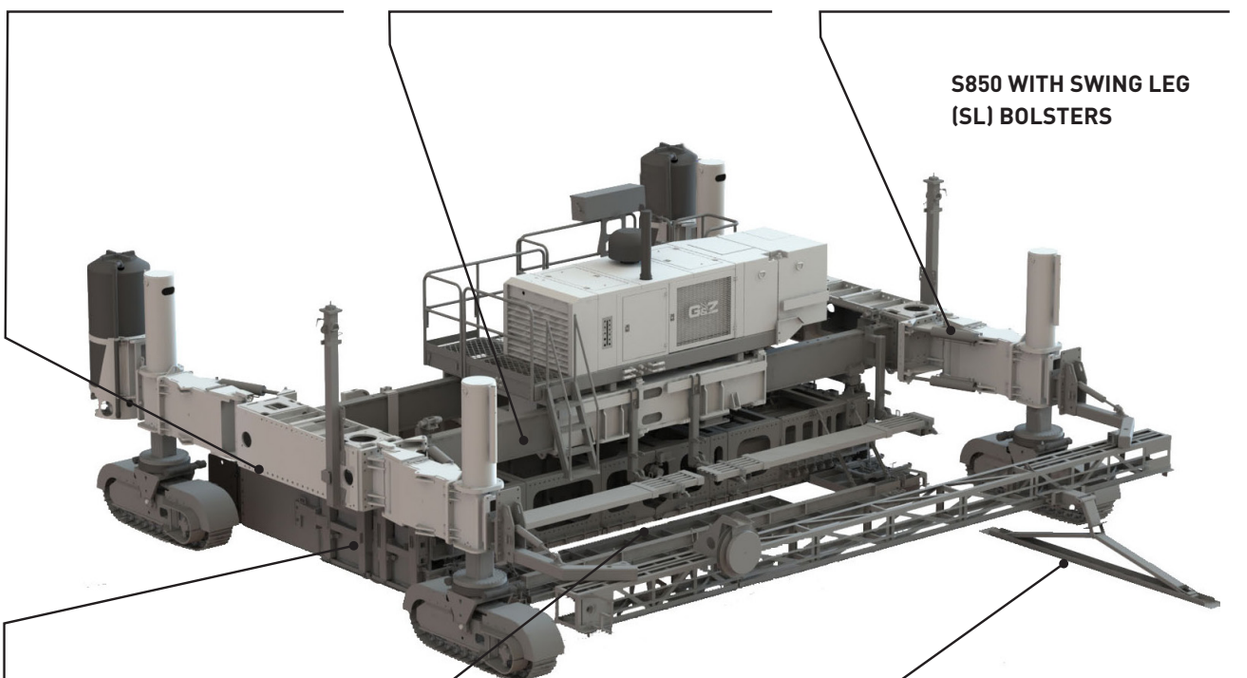

PAVING KIT

The Paving Kit is designed to achieve excellent smoothness and is available with time saving TeleEnds, TeleEnds XL, and Split Guillotine Sideforms. Fine width adjustment shims are provided to control concrete overrun.

TRAILING FINISHING PAN (OPTIONAL)

The Trailing Finishing Pan with fixed edger pans provides a simple and proven method of finishing the concrete surface while achieving superior edges.

FINAL FINISHER (OPTIONAL)

A Final Finisher is one of several G&Z concrete finishing options. The Final Finisher's light weight magnesium ski oscillates back and forth across the slab to finish the concrete surface.

TECHNOLOGY PIONEERED BY G&Z

G&Z is committed to making its customers as productive as possible to **MAXIMIZE AVAILABLE PAVING TIME AND MINIMIZE EVERYTHING ELSE**. The S850 is offered with industry proven and requested options pioneered and perfected by G&Z including AccuSteer, SmartLeg, TeleEnd, VariWidth and more. These optional productivity features work together to dramatically reduce the time required to change the paving kit and tractor width, maneuver on-site and reconfigure or prepare the machine for transport. G&Z offers a wide range of technologies to help contractors dramatically increase the number of paving days available during the season. Listening to contractors' needs and engineering solutions makes G&Z equipment **CONTRACTOR INSPIRED...GUNTERT ENGINEERED.**

* With G&Z's exclusive, optional JC Extender System, frame extensions pin-in quickly extending telescopic range out to 34ft (10.36m)

Patent Owner, Guntert & Zimmerman - Ex. 2001, p. 3

TWO BOLSTER SOLUTIONS TO MEE

THE SMARTLEG BOLSTER SYSTEM

SMARTLEG BOLSTER SYSTEM PRODUCTIVITY FEATURES

ACCUSTEER

The **AccuSteer** system using hydraulic motor driven slew drives with 320 degree rotation offers unparalleled maneuverability and accuracy, allowing synchronized steering in 90 degree mode in every swing leg position.

SMARTLEG

The **SmartLeg** system in tandem with **AccuSteer** allows the swing leg angle to be adjusted on-the-fly to maneuver around an obstacle while automatically keeping the crawler track straight ahead.

NARROW PROFILE: SUITABLE FOR TIGHT CLEARANCES

The S850 has the narrowest profile of any multi-lane paver in the market. In the standard paving configuration, the distance from the edge of pavement to the widest point on the tractor is only 25 in. (635mm) with the sensor support arms removed. The narrow profile design provides contractors with solutions to difficult site paving challenges where limited room is available for trackline. When the crawler track is equipped with special 9 in. (229mm) wide urethane pads and is rotated so the motors are on the inside, a contractor can pave on a companion lane track line as narrow as 12 in. (305mm).

Patent Owner, Guntert & Zimmerman - Ex. 2001, p. 4

EET CUSTOMER SPECIFIC NEEDS

THE QUADRA BOLSTER SYSTEM

PAVING MODES WITH THE QUADRA BOLSTER SYSTEM

COMPRESSED MODE

EXTENDED MODE

G&Z's exclusive telescopic **QUADRA** bolsters allow for two modes of paving: the **extended mode** for normal paving or the **compressed mode** for tight radius paving or to minimize the width of the paver in the 90 degree mode, reducing the size of hand pours. The bolsters hydraulically compress from the extended mode for transport.

TRANSPORT MODES WITH THE QUADRA BOLSTER SYSTEM

COMPRESSED MODE

EXTENDED MODE

The **QUADRA** bolsters allow for two modes of transport (with or without the paving kit): the **compressed mode** for walking and steering onto a 10ft (3m) wide trailer with removeable gooseneck, or the **extended mode** for straddling and self-loading on an 8ft 6in. (2.5m) step-deck trailer. In **compressed mode**, the load width is under 12ft (3.5m) with the paving kit left on and Trailing Finishing Pan folded up. The load length is 11ft (3.35m) longer than the paving width greatly reducing the load length compared to the Swing Leg Bolster system.

Patent Owner, Guntert & Zimmerman - Ex. 2001, p. 5

QUICK AND EASY WIDTH CHANGES

JC EXTENDERS
TRACTOR WIDTH CHANGE SYSTEM

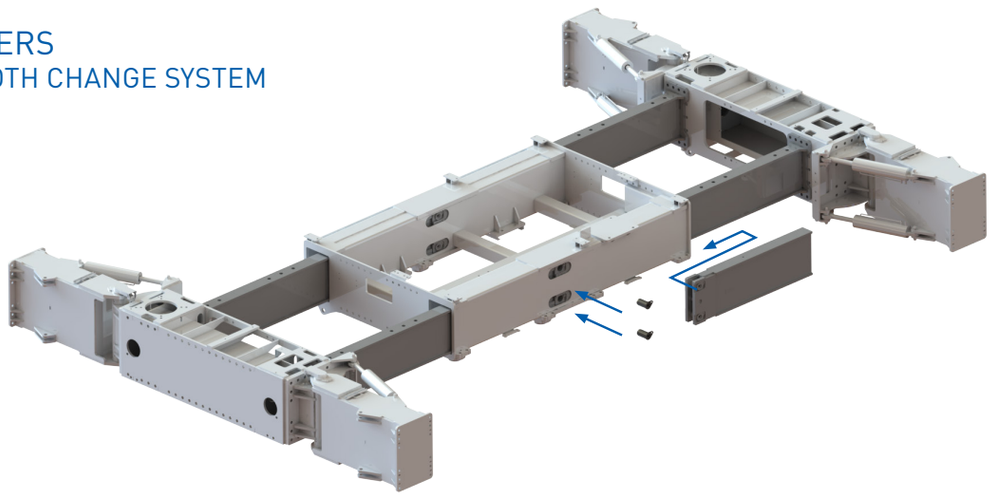

By sliding the easy to add JC Extender Sections (two pins per sections) into the tractor center module tunnels, and pinning the extensions to the ends of the male telescopic tubes, the tractor frame telescopic range increases from 18ft to 34ft (5.5m to 10.36m) without the time consuming need to bolt-in tractor frame extensions or disconnecting hoses. The tractor frame can be telescoped by turning the crawler tracks in the 90 degree mode and walking the frame together or apart.

TELEEND
PAVING KIT TELESCOPIC END SECTION

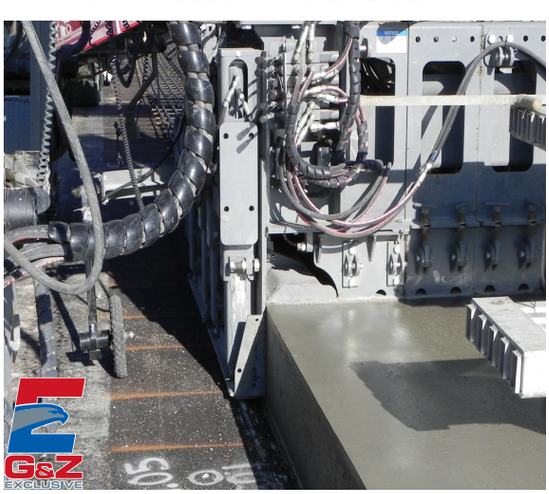

Changing paving widths has never been quicker or easier with G&Z's exclusive TeleEnds. **Width changes can be accomplished in under a couple hours...instead of days without sacrificing pavement smoothness!** No bolts need to be removed or shims added. The paving kit does not need to be removed during width change. G&Z's patented paving kit Telescopic End Sections come in two sizes: TeleEnds offer 3ft (1m) of telescopic ability per side from 5ft to 8ft (1.5m to 2.5m). TeleEndXLs offer 4ft (1.25m) of telescopic ability per side, from 7ft to 11ft (2m to 3.25m). Precision front, rear and pan spacers are available in 3, 4, 6, 8, 9 and 12 inch increments (75, 100, 150, 200, 250 and 300mm).

VARIWIDTH:
TRACTOR WIDTH CHANGES

Hydraulic Clamping Pucks are available in lieu of mechanical pucks as an option to quickly and easily change width on the double telescopic tractor frame.

SPREADER PLOW

G&Z's powerful and fast concrete spreader plow is easier to change width than an auger. The spreader cart track sections are structural, eliminating the need for intermediate track supports. Only four bolts per splice allow for quick and easy width changes.

INTEGRAL CURB

G&Z's Standard Terminal Ends and Telescopic End Sections are capable of receiving a wide variety of curb mold cross-sections that are quick and easy to add and remove to suit the contractor's needs.

Patent Owner, Guntert & Zimmerman - Ex. 2001, p. 6

LOWEST OPERATING COST

ULTRA LOW-EMISSION / FUEL EFFICIENT DIESEL ENGINE

The Power Unit houses a quiet, fuel efficient, low emissions diesel engine while providing excellent access to the pumps and filters. Variable speed, hydraulic motor driven fans on the engine radiator and heat exchanger, double vibration isolation and a noise insulated enclosure all provide excellent operator comfort. The diesel fuel tank (along with the DEF tank) are conveniently located and accessed off the end of the Power Unit from the operator platform. The Power Unit electrical and hydraulic filtration systems are designed for ease of access, monitoring, and troubleshooting.

The 6-cylinder CAT C9.3B US EPA Tier 4 Final / EU Stage V 415 hp (309 kW) diesel engine offers superior fuel economy with "Ecomode" feature.

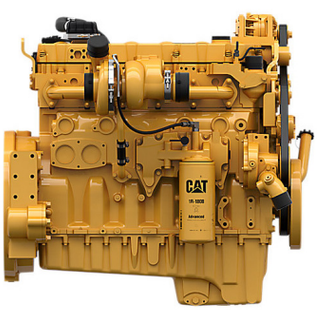

The 6-cylinder CAT C9 US EPA Tier 3 / EU Stage IIIA 350 hp (261 kW) diesel engine is supplied in markets where ultra-low emissions are not mandated and / or low sulfur diesel is not available.

SMARTLY ECONOMICAL / LOWER CAPITAL INVESTMENT

G&Z pavers help you optimize your concrete paving equipment fleet due to their ability to reconfigure quickly for different pavement widths and applications, while keeping capital investment low. Many of the S850 components, attachments and options are completely interchangeable between larger and smaller G&Z paver models, such as paving kits, Trailing Finishing Pans, Final Finishers, front and side tie bar inserters, and water systems. The concrete spreader plow system parts are interchangeable between the S850 and S1500. The Dowel Bar Inserter can be interchanged with minor adaption. This flexibility allows contractors to expand their paving equipment fleet with lower capital investment.

Patent Owner, Guntert & Zimmerman - Ex. 2001, p. 7

PAVING TECHNOLOGY AT ITS BEST

EGON: EQUIPMENT GUIDANCE & OPERATION NETWORK

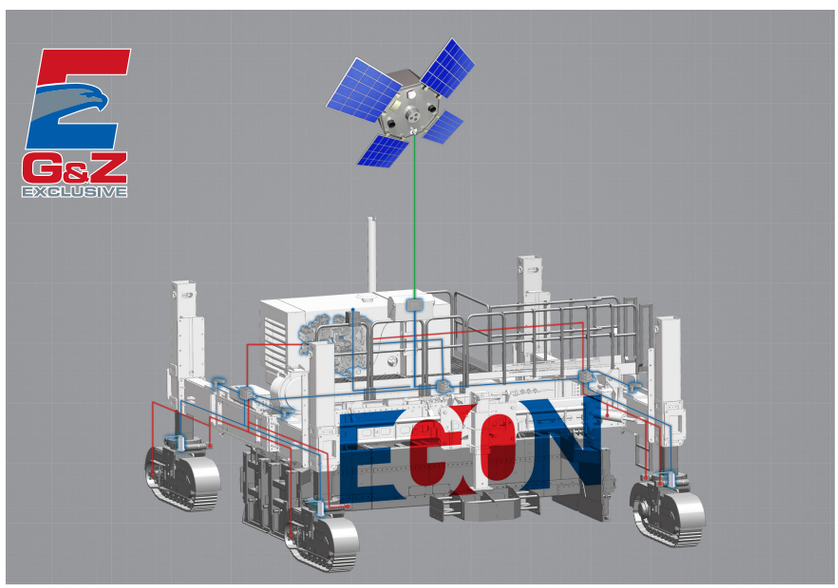

EGON semi-automatically reconfigures the paver into 90 degree, counter-rotation, and transport modes saving time and money.

EGON Operator Control System incorporates user friendly features, a modular state of the art network of controllers, extensive onboard and remote monitoring options, and diagnostic capability to allow superior ease of use and troubleshooting. **It has never been easier to operate, reconfigure, diagnose, and manage a piece of concrete paving equipment.**

LATEST TECHNOLOGY

- G&Z's proprietary EGON software algorithms coupled with our proven hydraulic controls insures the most responsive elevation and steering control system in the industry.
- EGON Telematics offers remote machine system monitoring for the contractor, as well as troubleshooting for G&Z service personnel.
- EGON NoLine integrates third-party stringless system directly into the paver control system
- Easy setup and operation makes G&Z equipment a great fit for any contractor
- EGON's semi-automatic reconfiguration routines save time and money.
- EGON is modular, reducing spare parts and maximizing uptime.

EGON ADVANTAGES

- G&Z's EGON makes operating a piece of G&Z equipment easy and intuitive.
- Powerful User Interface: The EGON Telematics access portal helps contractors understand the machine data to make timely, informed decisions.
- Remote Satellite Connection: The wireless data exchange benefits of EGON Telematics are possible anywhere in the world.
- Direct/Remote Wi-Fi Access and Bluetooth Ready: Data transfers, software updates, parameter modifications and diagnostics can be performed wirelessly, either between a machine and a laptop, or remotely.
- CAN Bridging: CAN-based data can be wirelessly exchanged between paver and attachments, enabling precise coordination of movement, synchronized operations and other productivity enhanced benefits.

THE SMOOTH ROAD TO CONNECTIVITY

BELLY PACK

EGON Belly Pack console provides great flexibility to the operator. The Belly Pack includes a relocatable docking station for the belly pack, the operator display, and mount for the vibrator monitoring system.

NOLINE STRINGLESS KIT

NoLine is comprised of an EGON software upgrade and a hardware mounting kit. EGON NoLine Software Upgrade integrates the use of third-party stringless technology directly into the paver's CAN Bus network.

EGON TELEMATICS - YOUR MODERN FLEET MANAGEMENT TOOL

To benefit from the Artificial Intelligence (AI) tools and improve the utilization and efficiency of the paving equipment, G&Z software engineers developed the knowledge-based, remote diagnostics and monitoring system called EGON Telematics. EGON Telematics receives and transmits data via global cellular network while storing it in the cloud. This unique application allows contractors to reconfigure, diagnose and monitor their fleet remotely. With the purchase of any G&Z paving equipment, fleet managers obtain exclusive access to an online interface capable of being used to support your asset management system. EGON Telematics helps contractors to increase operational productivity by reducing diagnostics time and improving machine serviceability, as well as, maximize equipment's life time and resale value.

EXCEPTIONAL SMOOTHNESS

PAVING KIT

The Paving Kit's precision machined, box frame sections are rigid enough to achieve excellent smoothness results on projects with strict smoothness requirements. It can be provided in 1ft or 25cm increments and with one or more crown sections. The Pan Kit pan skins that bolt to a machined surface can be removed quickly and easily for repair, or if necessary replacement, without the need to remove the paving kit section. Thick flanges allow fewer bolts per section which speed width changes. The Paving Kit can be mounted in multiple locations under the S850 tractor and can be quickly and easily mounted or unmounted from the tractor.

SPLIT GUILLOTINE SIDEFORMS

As an option, Guillotine Sideforms with -2 in. to 18 in. (-50mm to 457mm) of hydraulic adjustment can be supplied split, allowing independent adjustment of the front and rear portions of the sideform. The rear half of the sideform is equipped with hydraulic open / close cylinders which are powerful enough to close against plastic concrete.

TRAILING FINISHING PAN

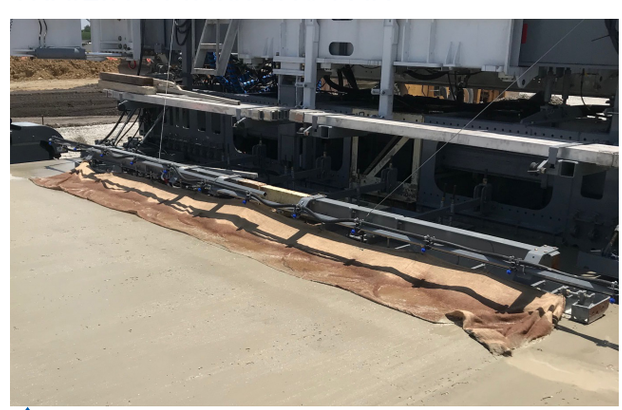

For extra smoothness, the S850 can be fitted with G&Z's optional Trailing Finishing Pan (TFP). The 48 in. (1.2m) wide TFP with fixed edger pans provides a proven method of finishing the pavement surface with fine adjustment, ensuring sharp edges. It also accommodates a wide range of side bar inserters.

RIDE QUALITY AND SMOOTHNESS

Excellent concrete smoothness and ride quality has been a hallmark of G&Z equipment since 1956. G&Z takes its design and manufacturing processes seriously to ensure precision fit equals quality smoothness for its customers. From machined surfaces on the paving kit to great designs like TeleEnds and Trailing Finishing Pans, G&Z works hard to help its customers achieve award-winning ride quality and the smoothest concrete pavements possible in every market while keeping them productive.

Patent Owner, Guntert & Zimmerman - Ex. 2001, p. 10

COMPACT DOWEL BAR INSERTER

DOWEL BAR INSERTION WITH DBI CONFINING PAN

G&Z's DBI accurately inserts dowels in concrete behind the slipform confining pan. The unique combination of the DBI confining pan, trailing sideforms and vibrating forks ensure good consolidation and homogeneous concrete around the inserted dowel bars, even with low airport slump concrete. This is accomplished while minimizing the disturbance to the surrounding concrete surface during insertion.

OSCILLATING CORRECTING BEAM

An Oscillating Correcting Beam, which is a part of the DBI System, ensures accurate refinishing of the concrete surface disturbed by the dowel bar insertion process.

MODULAR / SELF LOADING

With the selection of the optional DBI Self Loading Jacks, the modular DBI can be self-loaded on a trailer without the use of a crane, saving time and money.

EXCEPTIONAL ACCURACY IN DOWEL BAR INSERTION

Since the late 1970's, G&Z has been the pioneer and leader in DBI technology by working closely with its customers in the field, and continuously improving its DBI.

This pioneering edge ensures G&Z DBI users high dowel bar insertion accuracy (checked with MIT scan) and homogeneous concrete around the bars, as well as the highest reliability, productivity, mobility, ease of width change and smoothest rides possible.

The DBI mounts off the rear of the S850 with minimal modification in either the compact or narrow profile configuration with bolster extensions. The Compact DBI can convert back and forth between DBI and non-DBI paving in a matter of hours.

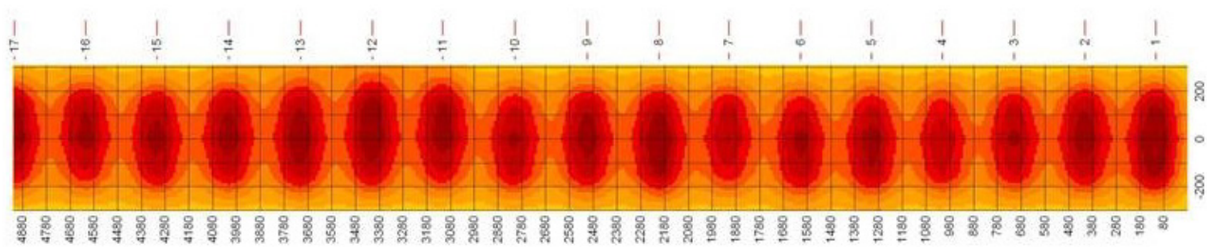

Patent Owner, Guntert & Zimmerman - Ex. 2001, p. 11

S850SL SPECIFICATIONS

APPLICATIONS	Ramps and Interchange Lanes City and Secondary Streets Concrete Overlays and Inlays County Roads and Other Secondary Roads	Mainline Highway Paving Airport Runways, Taxiways and Aprons Canal and Reservoir Lining

MINIMUM PAVING WIDTH	12ft (3.65m)
MAXIMUM PAVING WIDTH	41ft (12.5m) with optional bolt-in tractor frame extensions
TRACTOR TELESCOPIC CAPABILITY	12ft - 26ft (3.65m - 7.9m) double telescopic 18ft - 34ft (5.5m - 10.36m) with the optional JC Extenders *Note: The JC Extenders can be added in under 2 hours*
TRANPORT DIMENSIONS	Minimum Shipping Length - 36.5ft (11.13m) Transport Length - Paving Width + 24.5ft (7.3m) Transport Width - Under 12ft (3.65m)
REQUIRED TRACK PATH	2ft (610mm)
OPERATING WEIGHT BASIC MACHINE 24' (7.3M) WITHOUT OPTIONS	108,000 lbs (48,988 kg)
ENGINE / FUEL TANK	6 Cylinder CAT C9.3B ACERT Diesel Engine US Federal Tier 4f IOPU / EU Stage V "C" Rating Horse power @ 2,100 RPM: 415hp (309kW) Diesel Fuel Tank 180 U.S. Gallon (681L) DEF Tank 12.7 U.S.Gallon (48L) --- 6 Cylinder CAT C9 Diesel Engine US EPA Tier 3 / EU Stage IIIA Horse power @ 2,100 RPM: 350hp (261kW) Diesel Fuel Tank 230 U.S. Gallon (869L)
HYDRAULIC TANK	190 U.S. Gallons (718L)
WATER TANK	Front Jacking Column mounted polyurethane 200 U.S. Gallons (756L) with 2000 psi (13.8 MPa) high and low pressure water washdown system
CONCRETE POKER VIBRATORS	Hydraulic or Electric High Frequency
CRAWLER TRACKS	Standard 16 in. (400mm) wide Polyurethane grousers Working Speed: 0-16fpm (0-4.88m/min) Travel Speed: 0-74fmp (0-22.5m/min)

Note: All the above data is approximate and is subject to change without notice.

Patent Owner, Guntert & Zimmerman - Ex. 2001, p. 12

S850QB SPECIFICATIONS

APPLICATIONS	Ramps and Interchange Lanes City and Secondary Streets Concrete Overlays and Inlays County Roads and Other Secondary Roads	Mainline Highway Paving Airport Runways, Taxiways and Aprons Canal and Reservoir Lining

MINIMUM PAVING WIDTH	12ft (3.65m)
MAXIMUM PAVING WIDTH	41ft (12.5m) with optional bolt-in tractor frame extensions
TRACTOR TELESCOPIC CAPABILITY	12ft - 26ft (3.65m - 7.9m) double telescopic 18ft - 34ft (5.5m - 10.36m) with the optional JC Extenders *Note: The JC Extenders can be added in under 2 hours*
TRANPORT DIMENSIONS	Minimum Shipping Length - 23ft (7m) Transport Length - Paving Width + 11ft (3.35m) Transport Width - Under 12ft (3.65m)
REQUIRED TRACK PATH	2ft (610mm) or less
OPERATING WEIGHT BASIC MACHINE 24' (7.3M) WITHOUT OPTIONS	106,000 lbs (48,08 kg)
ENGINE / FUEL TANK	6 Cylinder CAT C9.3B ACERT Diesel Engine US Federal Tier 4f IOPU / EU Stage V "C" Rating Horse power @ 2,100 RPM: 415hp (309kW) Diesel Fuel Tank 180 U.S. Gallon (681L) DEF Tank 12.7 U.S.Gallon (48L) --- 6 Cylinder CAT C9 Diesel Engine US EPA Tier 3 / EU Stage IIIA Horse power @ 2,100 RPM: 350hp (261kW) Diesel Fuel Tank 230 U.S. Gallon (869L)
HYDRAULIC TANK	190 U.S. Gallons (718L)
WATER TANK	Bolster mounted polyurethane 300 U.S. Gallons (1,136L) with 2000 psi (13.8MPa) high and low pressure water washdown system
CONCRETE POKER VIBRATORS	Hydraulic or Electric High Frequency
CRAWLER TRACKS	Standard 16 in. (400mm) wide Polyurethane grousers Working Speed: 0-16fpm (0-4.88m/min) Travel Speed: 0-74fmp (0-22.5m/min)

Note: All the above data is approximate and is subject to change without notice.

G&Z'S SLIPFORM PAVING EQUIPMENT LINE

CONCRETE SLIPFORM PAVERS

S400
6.5 - 24.5ft (2 - 7.5m)

S600
8 - 34ft (2.5 - 10.36m)

S850 (QB OR SL)
12 - 41ft (3.65 - 12.5m)

S1500
18 - 52.5ft (5.5 - 16m)

CONCRETE SLIPFORM PAVING SUPPORT EQUIPMENT

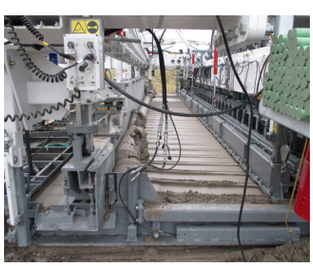

DBI
Dowel Bar Inserter

MP550
Material Placer

PS1200 PLACER SPREADER
18 - 41ft (5.5 - 12.5m)

TC1500 TEXTURE CURE MACHINE
12 - 56ft (3.5 - 17m)

WORLD CLASS EQUIPMENT WITHOUT EQUAL

G&Z's Concrete Paving machines are the most trusted in the industry. In 1956, G&Z pioneered and introduced the first concrete highway and airport slipform paver mounted on crawler tracks with automatic line and grade control. Today, G&Z offers a wide range of concrete slipform paver models along with other support equipment, such as mechanical Dowel Bar Inserters, Placer Spreaders, Material Placers and Texture Cure Machines, to suit contractor's present and future needs.

G&Z equipment designs are based on over 75 years of experience; designed and built to last under the rigors of job site use, transport, and configuration changes. G&Z strives to design paving equipment for what people do with it...not what they should do with it! Unique productivity features are incorporated in each machine design to reduce the time required to transport, maneuver, and change paving widths without sacrificing the performance advantages contractors have come to expect from G&Z.

Patent Owner, Guntert & Zimmerman - Ex. 2001, p. 14

PROUDLY MADE IN THE USA...

Guntert & Zimmerman Const. Div., Inc.
222 E. Fourth St. Ripon, CA 95366 U.S.A.
Phone +1 209-599-0066 Fax +1 209-599-2021
Toll Free 800-733-2912 (USA / Canada)
Email: gz@guntert.com Web: www.guntert.com

Manufactured under one or more of the following U.S. or Foreign Patents: www.guntert.com/patents.html. Some items shown may be optional. G&Z reserves the right to make improvements in design, material and/or changes in specifications at any time without notice and without incurring any obligation related to such changes.

Brochure No.400P199