PM102
Cold Planer

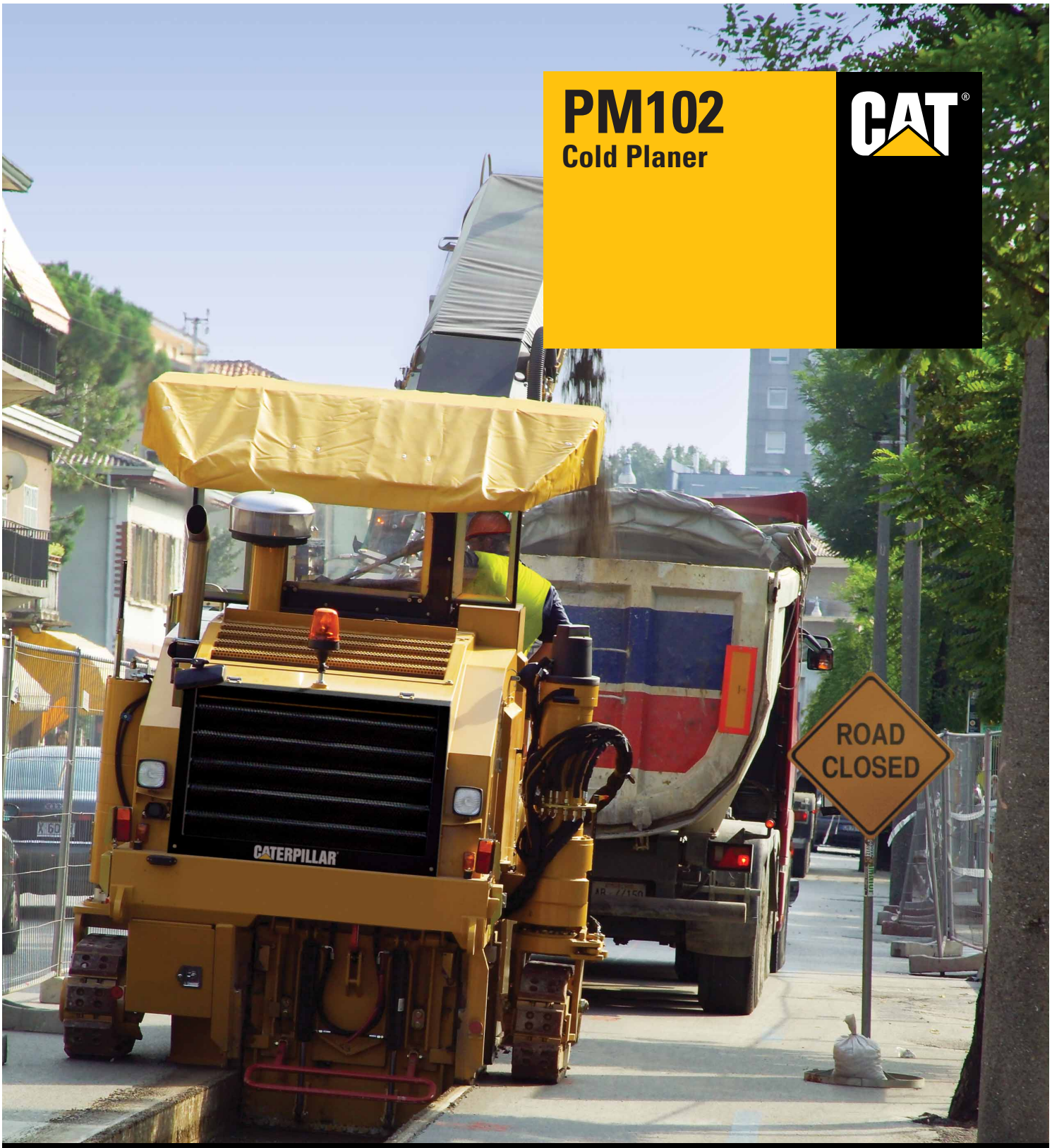

Cat® C7 Engine with ACERT®		
Gross Power (SAE J1995)	168 kW	225 hp
Operating Weight	17 600 kg	38,810 lb
Rotor Width	1000 mm	40"
Rotor Depth (maximum)	305 mm	12"

PM102 Cold Planer

The PM102 combines enhanced production capabilities, optimized performance and simplified service to complete tough milling applications with productive results.

C7 Engine with ACERT Technology

ACERT Technology works at the point of combustion to optimize engine performance and provide low exhaust emissions. The C7 engine with ACERT Technology provides clean burning power. **pg. 4**

Rotor Drive

A Cat® dry clutch with automatic belt tension adjustment delivers efficient and reliable power to the pavement. The rotor drive consists of field-proven Caterpillar components for long service life. **pg. 7**

Loading Conveyor

The PM102 features a folding front loading conveyor for easy transportation. The conveyor swings 41 degrees to the left or right to meet your job requirements. **pg. 8**

Propel System

Propel pump provides balanced flow to dual displacement drive motors on each track. Provides superior tractive effort on slippery surfaces. The electronically controlled load sensing system matches propel speed to load on rotor for maximum production. **pg. 5**

Rotor

Rotor with quick release conical tool holders for quick and easy tool replacement. **pg. 6**

Anti-slab and Collecting Conveyor

A large discharge opening and wide collecting conveyor belt clear out the cutter box fast. Water spray system for lubrication, cooling and dust reduction. **pg. 8**

Patent Owner, Guntert & Zimmerman - Ex. 2018, p. 2

Operator's Station

Ergonomic design emphasizes comfort, visibility and easy operation. Machine controls are grouped and conveniently located to enhance operator productivity and reduce fatigue. **pg. 9**

Flush Cutting Feature

Flush cutting operation with hydraulic control allows the PM102 to be used up close to a curb, wall or guard rail. **pg. 10**

Steering Right Rear Track

Compact dimension and steering right rear track provides optimum machine handling, facilitating precise operation in confined areas. **pg. 10**

Automatic Grade and Slope Controls

The optional grade and slope systems provide precise control of rotor to a preset cutting depth and cross slope. **pg. 7**

Serviceability

The power-assisted engine hood opens wide and provides exceptional access to the engine, hydraulic pumps and daily service points. Hydraulic rotor service door provides convenient access to the rotor for easy cutting tool removal and replacement.

The rotor service door also provides easy access to the water spray nozzles for inspection and replacement without the need for tools. **pg. 11**

Reliability and durability you expect.

Proven components and technology ensure maximum performance in the most demanding job specifications. The compact sized PM102 performs full-depth removal of asphalt and concrete pavements with optimum productive results.

Patent Owner, Guntert & Zimmerman - Ex. 2018, p. 3

C7 Engine with ACERT Technology

ACERT Technology maintains engine performance, efficiency and durability while reducing emissions. Meets US Tier 3 and European EU Stage IIIA emission regulations for off-road applications.

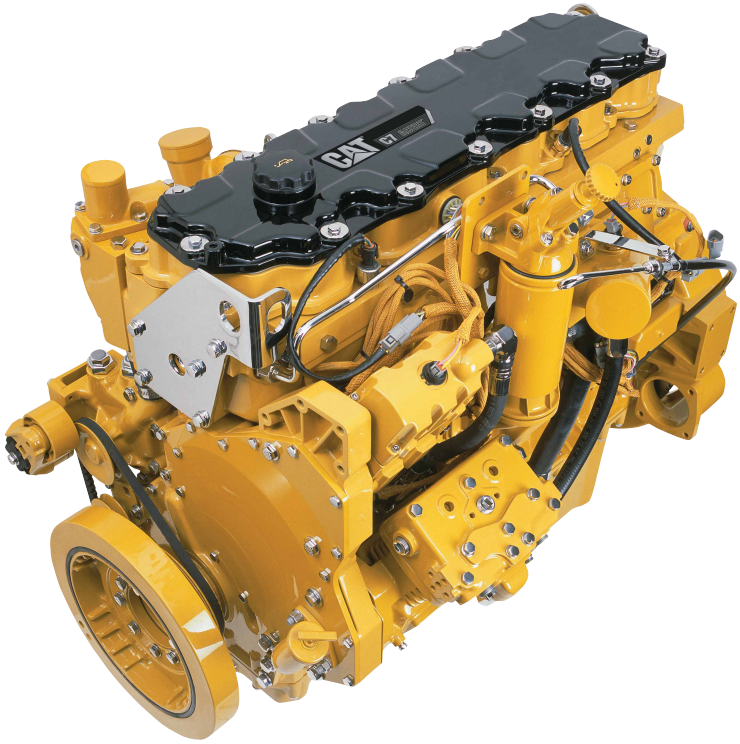

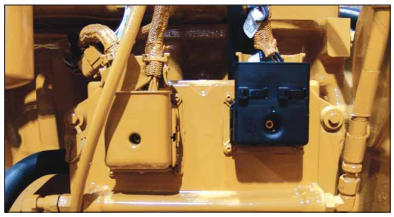

The ADEM™ A4 electronic control module. This module manages fuel delivery, valve timing and airflow for efficient performance per gallon (liter) of fuel used. The control module provides flexible fuel mapping, allowing the engine to respond quickly to varying application needs. It monitors engine and machine conditions while keeping the engine operating at peak efficiency.

Engine. US Tier 3 and EU Stage IIIA compliant C7 engine with ACERT Technology combines proven systems with innovative new technologies to precisely deliver fuel to the combustion chamber. It maintains engine performance, efficiency and durability while dramatically reducing emissions.

The Cat C7 is a 7.2 L displacement, 6-cylinder, electronically governed engine. Electronic fuel injection is provided through the well-proven Caterpillar hydraulically actuated, electronically controlled unit injection (HEUI) system. A wastegate turbocharger, equipped with a titanium wheel for improved durability, combined with air-to-air aftercooling (ATAAC) provides consistent high horsepower with increased altitude capability.

Optimum power. The engine performs at a full-rated gross power of 225 hp (168 kW) at 2200 rpm. Engine power curve is optimized for milling applications providing optimum power while keeping the engine operating at peak efficiency.

High cylinder pressures. High cylinder pressures combined with tightly controlled tolerances promote extremely efficient fuel burn, less blow by and lower emissions.

Hydraulically Actuated Electronic Unit Injectors (HEUI). The HEUI system has been at work in Cat engines across the product line with a proven track record of consistent, durable, reliable performance.

Precise multiple injection fuel delivery. Combustion chamber temperatures are lowered by precisely shaping the combustion cycle, generating fewer emissions and optimizing fuel combustion. The result is more work output for your fuel cost.

Turbocharged and air-to-air aftercooling. High horsepower with increased response time is assured while keeping exhaust temperatures low for long hours of continuous operation.

Engine Block and Pistons. The grey cast iron engine block is made of the same material as the cylinder heads. Wall diameters are thicker than in previous designs while adjustments have been made to reduce sound levels and increase rigidity. One-piece all-steel pistons are housed within a wet, replaceable cast iron cylinder liner constructed of high-strength, heat-treated castings. Steel-forged connecting rods are larger in diameter.

Easier service, maintenance and repair through monitoring key functions and logging critical indicators. Advanced electronic diagnostic capabilities are possible using Cat Electronic Technician.

Patent Owner, Guntert & Zimmerman - Ex. 2018, p. 4

Propel System

Hydrostatic drive with hydraulic flow provided by a variable displacement axial piston pump. Dual displacement drive motors on each track provides balanced tractive effort.

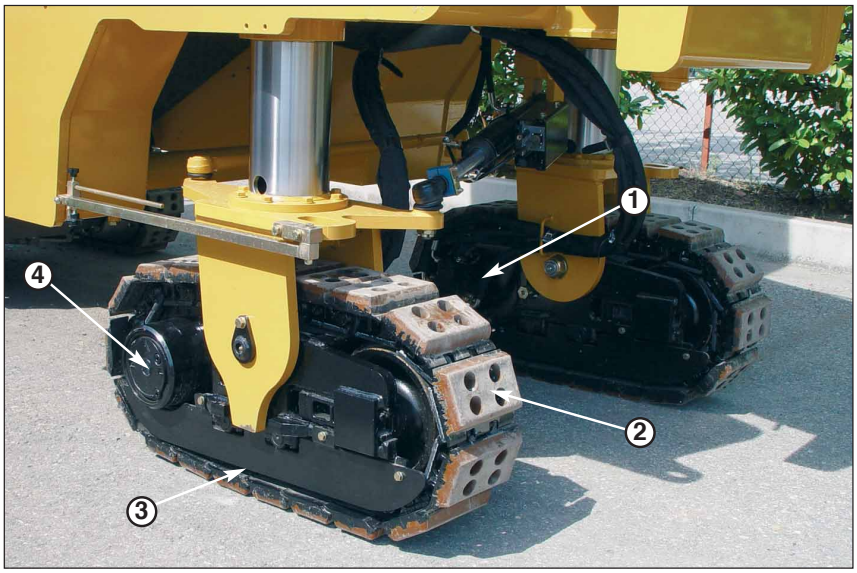

1 Two Speed Drive Motor
2 Polyurethane Track Pads
3 Heavy-duty Rollers
4 Planetary w/Secondary Brake

Load control system (anti-stall). The electronically controlled system matches propel speed to load on engine for maximum production.

Two speed ranges. The machine operates at either maximum torque throughout the entire milling speed range or at a faster travel speed for moving around the job site.

Positive traction control (flow divider). Equal hydraulic oil flow to each drive motor increases tractive effort in hard cutting applications. The positive traction control is actuated from the operator's console.

Polyurethane track pads. Track pads in polyurethane provide long service life and positive traction on all pavement surfaces.

Wheel Undercarriage Option

Wheels provide high travel speeds, which reduce machine repositioning times.

Total traction. The hydrostatic transmission on all four wheels, via a flow divider, and self levelling front axle ensure positive traction and optimum performance in all applications.

Optimum maneuverability. The large, wide-tread tires provide optimum maneuverability on tight curves and traction when driving in and out of the cut.

High travel speed. The high travel speed of the PM102 significantly reduces repositioning times and machine transfer on the job site.

Flush cutting. The right rear wheel support can be positioned inside the machine's cutting width for full flush cutting applications. With the right rear wheel swung in, the machine can cut close to a wall, barrier, or other vertical obstruction.

Patent Owner, Guntert & Zimmerman - Ex. 2018, p. 5

Rotor

Designed for high production and long service life. Quick release conical tool holders for quick and easy tool replacement.

Quick release three-piece tool holder.

97 carbide-tipped tools. Tools are mounted in durable three-piece, quick release patented tool holders and arranged in a triple wrap flighting pattern for maximum breakout force.

Quick release conical tool holders. A tapered fit maintains tightness in holder base. Fast and effortless tool removal is provided by the quick release conical tool holder tool removing system.

Large replaceable carbide faced loading paddles. Loading paddles effectively move milled material onto collecting conveyor resulting in higher production and less wear on inside of rotor chamber and cutting tools.

Optimum tool spacing. Triple-tree tool placement on rotor ends provides optimum tool spacing to clean up loose material and reduces wear on drum when maneuvering in the cut.

Rotor Drive

Delivers maximum available horsepower to each cutting tool.

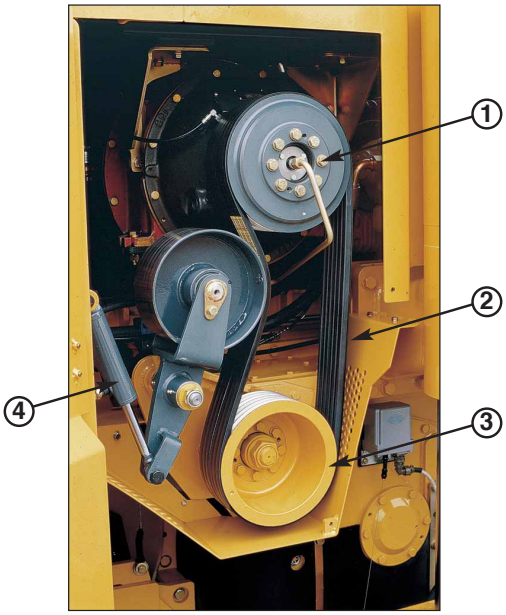

Cover removed for clarity.

1 Upper Sheave
2 Molded Drive Belt
3 Lower Sheave
4 Tension Cylinder

Mechanical dry clutch. The rotor drive consists of trapezoid pulleys, molded high-strength belt and a hydraulic-coupling dry clutch. The field-proven drive system delivers reliability and long service life.

Drive train protection. A drive train protection device protects rotor drive system, rotor and tools by instantly disengaging rotor drive whenever an abrupt drop in rotor rpm occurs.

Two cutting speeds. Upper and lower sheaves are easily interchangeable for maximum torque with the toughest materials and different material sizing requirements.

Molded six-rib high tensile belt. High tensile belt provides efficient transmission and long service life.

Automatic belt tension adjustment. The hydraulically powered automatic drive belt tensioner prevents rotor drive belt slippage and reduces maintenance.

Automatic Grade and Slope Control Option

The optional grade controls provide precise control of rotor to a preset cutting depth. System can be configured to control grade or cross slope.

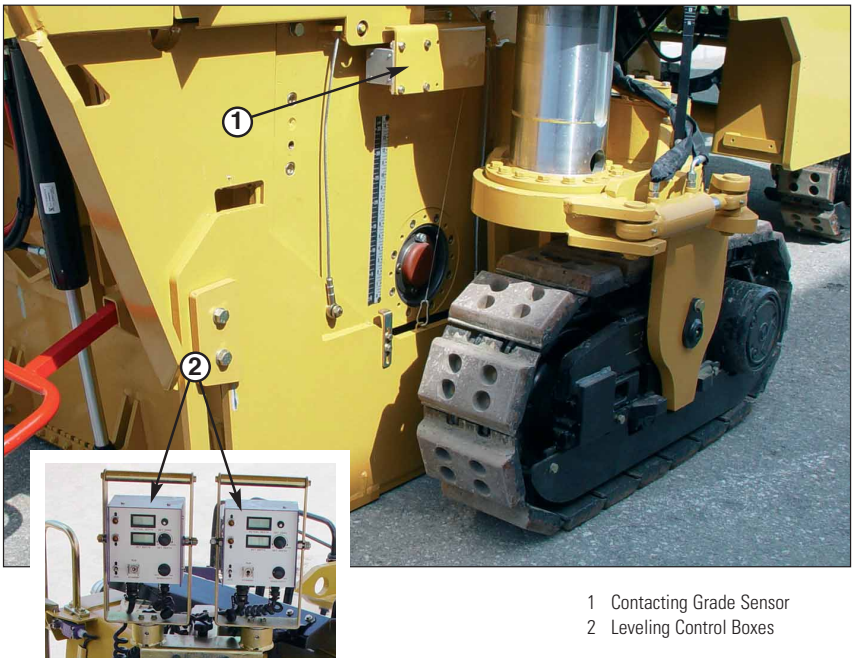

1 Contacting Grade Sensor
2 Leveling Control Boxes

Contacting wire rope grade sensors. Wire rope grade sensor measures side plate movement that enables the entire length of the side plate to become an averaging device for extremely accurate grade matching. Cross slope sensor adds to system versatility.

Leveling control boxes. Two control boxes located at the operator's station allow manual or automatic leveling adjustment. Constant read-out for rotor depth and cross slope are displayed on each control box and is easily visible even in direct sunlight or low light conditions.

Patent Owner, Guntert & Zimmerman - Ex. 2018, p. 7

Primary Collecting Conveyor

The collecting conveyor belt efficiently clears out the cutter box fast. Water spray system for lubrication, cooling and dust reduction.

Optimum material sizing and gradation. The hydraulically operated anti-slab device prevents slabbing of the road surface, protects the collecting conveyor and ensures an optimum discharge opening to the rotor chamber.

550 mm (21.6") wide collecting conveyor. Driven by a high torque hydraulic motor for maximum efficiency. An optional 600 mm (23.6") wide collecting conveyor is also available.

Variable belt speed. The collecting conveyor features variable belt speed for optimum production in all applications. Reversible belt rotation control is also provided.

Optimum dust reduction. Standard pressurized water spray lubricates and controls dust on collecting belt. Water spray nozzles are easily removed for inspection and replacement without the need for tools.

Folding Front Loading Conveyor

High capacity and versatility add to increased job site productivity. Conveyor can be folded to reduce machine dimensions during transport.

Folding conveyor. Machine transportation is made easier by the folding front conveyor that reduces the machine dimensions.

600 mm (23.6") wide upper conveyor. Height adjustment is hydraulically controlled and two cylinders provide a 41 degree swing to the left and right.

Variable loading belt speed and reversible rotation. The front loading conveyor also includes variable belt speed and reversible belt rotation control. The loading belt speed is infinitely variable and provides optimum discharge capability for uniformly loading the haul truck.

Simplified conveyor removal. Quick-fitting hydraulics and mechanical conveyor components allow the front conveyor to be easily detached from the machine.

Patent Owner, Guntert & Zimmerman - Ex. 2018, p. 8

Operator's Station

Designed for efficiency, productivity and simple operation. Easy to reach controls minimize operator fatigue.

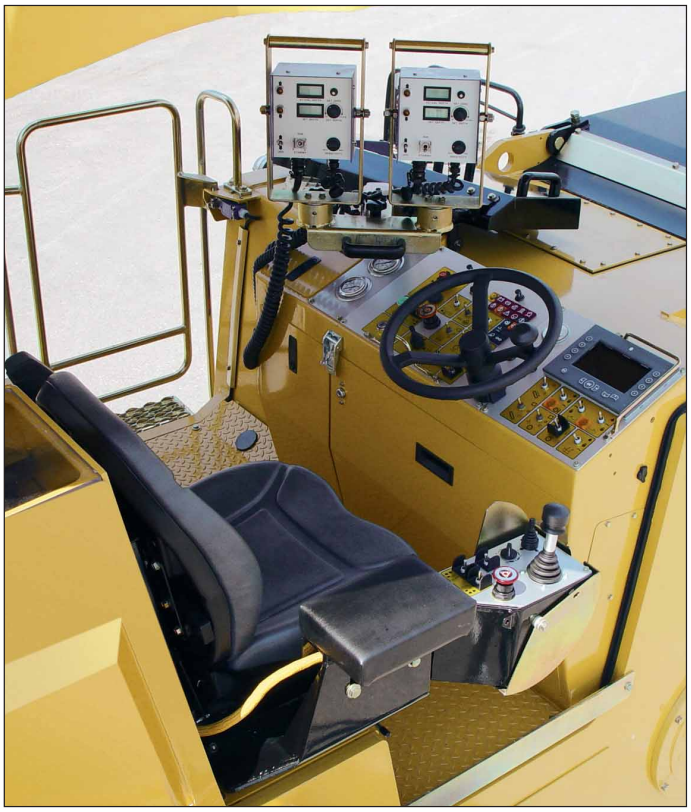

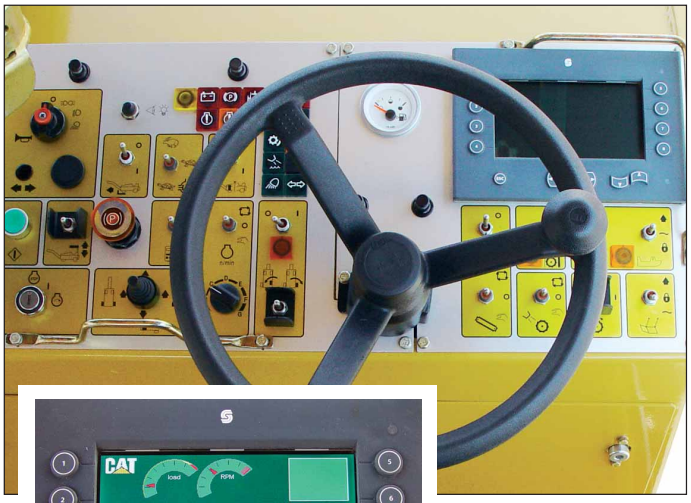

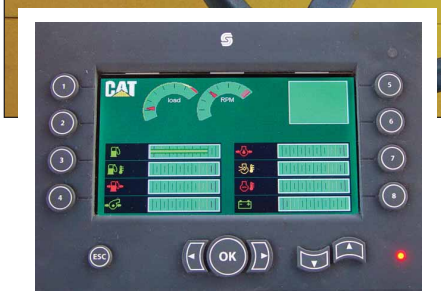

The large display provides operating parameters for machine and engine diagnostics. (Optional color display shown at left.)

Ergonomic operator's station. The full width operator's station provides a view of the front loading conveyor and side plates for precise and rapid positioning.

Suspension seat. Durable suspension seat with armrest provides optimum operator comfort.

Warning horns and shut down buttons. Located on the operator's station and at ground level control stations.

Hydraulically operated canopy option. Full width canopy with two extending side wings and front windshield and rear window provides optimum operator comfort and protection. Canopy can be hydraulically lowered during transportation.

Operating controls. The distribution and clear instrumentation layout on the front and side control consoles have been designed to ensure minimum operator effort and maximum automation. All gauges and displays are easily visible even in direct sunlight.

Graphic display. A large display, easily visible in direct sunlight, provides operating parameters for machine and engine diagnostics. The display presents a single interface for service diagnostics and calibration. Standard display is black and white; an optional color display is available.

Computerized monitoring system. The system constantly monitors system pressures and engine condition with multiple modes of operation. Alerts the operator if a problem does occur with three levels of event information.

Standby control. A single switch control allows the operator to engage or disengage main operating functions including propel, water spray system, leveling system and conveyor rotation for maximum automation.

Patent Owner, Guntert & Zimmerman - Ex. 2018, p. 9

Flush Cutting Feature

Full flush cutting operation with hydraulic control of the right rear leg allows the PM102 to be used up close to a curb, wall or guard rail.

Leg in the full-out position.

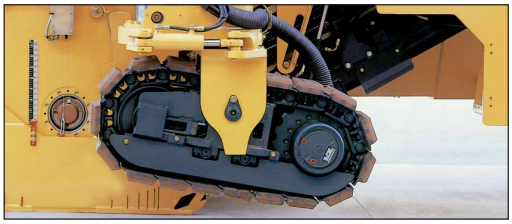

Leg in the swing-in position.

Leg in the full-in position.

Flush cutting. The right rear leg can be swung in within the machine's cutting width for full flush cutting applications. With the right rear leg swung in, the machine can cut close to a wall, barrier or other vertical obstruction.

Exclusive Caterpillar single-piece swing-arm design.
The swing-in arm mechanism ensures increased rigidity eliminating excessive wear for increased component life.

Automatic control. The rear leg swing-in system is automatic and controlled from the operator's station. The operator is not required to leave the seat while positioning the right rear leg within the machine's cutting width.

Steering Right Rear Track

Optimum machine handling for precise control and production.

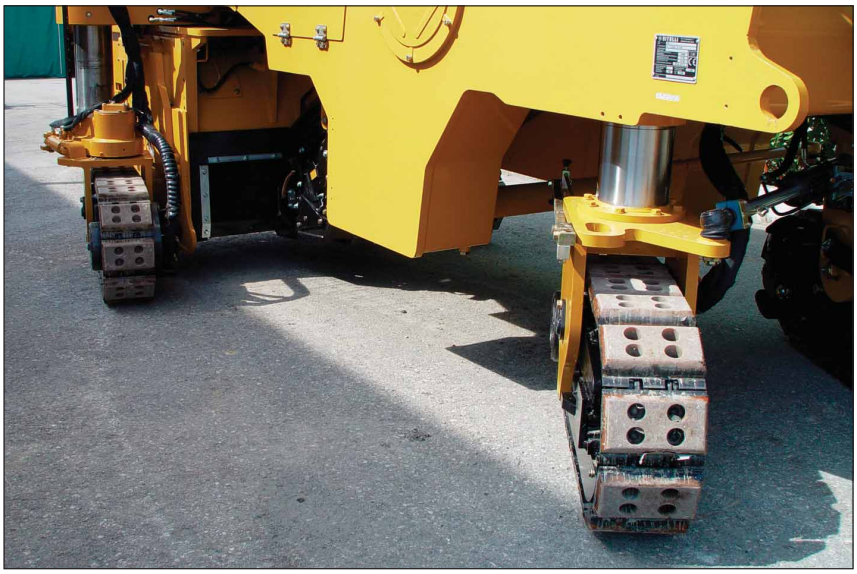

Precise control. A microprocessor electronically controls the steering angle of the right rear track. The rear track steering angle is automatically adjusted in relation to the position of the front tracks.

Enhanced steering ability. The machine's rear track steering feature facilitates operation in confined areas and ensures a close cut around cul-de-sacs or turns. The right rear track steers in both positions, whether positioned within or outside the cutting width.

Patent Owner, Guntert & Zimmerman - Ex. 2018, p. 10

Reliability and Serviceability

Reliability and serviceability are integrated into every Caterpillar machine. These important features keep your machine investment profitable.

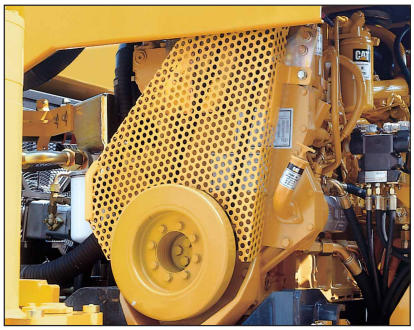

Large engine service doors provide excellent access to engine and hydraulic components from ground level.

Large service doors. Large service doors provide excellent access to engine and hydraulic components. Engine side covers swing wide to allow ground-level access to engine. Rear cover swings up for access to radiator and oil cooler.

Hydraulic rotor service door. The rotor service door opens wide for easy access to rotor for inspection and tool maintenance.

Electronic Control Module (ECM). ECM monitors machine systems and provides self-diagnostics for operator or service personnel.

All-weather connectors. Nylon braided wrap ensure electrical system integrity.

Visual indicators. Visual indicators allow easy check of water spray tank level and hydraulic oil tank level.

Accessory drive system. In the event of a microprocessor malfunction, full operational control of main machine functions is readily available to allow assisted machine movement for maintenance and servicing.

Quick-connect hydraulic test ports. Quick-connect feature simplifies system diagnostics.

Ecology drains. Environmental method to drain fluids. They are included on the radiator, engine oil pan, hydraulic and fuel tank.

S•O•S℠ ports. Scheduled Oil Sample ports allow for simple fluid collection of hydraulic oil.

Secure hose routing. Polyethylene routing blocks provide a secure routing to reduce rubbing and increase service life of hoses.

Maintenance-free Caterpillar batteries. Batteries are mounted at the rear of the machine. Cat batteries are specifically designed for maximum cranking power and protection against vibration.

Patent Owner, Guntert & Zimmerman - Ex. 2018, p. 11

Engine

Six cylinder Caterpillar C7 with ACERT Technology, turbocharged air-to-air after-cooled diesel engine. Meets European EU Stage IIIA emissions control standards..

Engine	Cat® C7	
Gross Power	**kW**	**hp**
SAE J1995	168	225
Net Power	**kW**	**hp**
ISO 9249	156	209
EEC 80/1269	156	209
SAE J1349	151	203
Specifications		
Bore	110 mm	4.3"
Stroke	127 mm	5.0"
Displacement	7.2 liters	442 in^3

- The power ratings apply at a rated speed of 2200 RPM when tested under the reference conditions for the specific standard.
- The net power advertised is the power available at the flywheel when the engine is equipped with an alternator, air cleaner, muffler and fan.
- Derating is not required up to an altitude of 3000 m (9850').
- Cold mode starting aid, dual fuel filters with water separator and air compressor are standard.

Propel System

Hydrostatic drive with hydraulic flow provided by a variable displacement piston-type pump. Drive motors with planetary gear reduction on each track or wheel provides balanced tractive effort. Machine can be equipped with either a track or wheeled undercarriage.

Features

- A variable displacement, piston-type pump with electronic displacement control supplies pressurized flow.
- Positive traction control valve provides equal hydraulic oil flow to each drive motor to increase tractive effort in hard cutting.
- Drive motors have two swashplate positions allowing operation at either maximum torque throughout the entire milling speed range or at a faster travel speed for moving around the job site.
- Gear selection controlled electrically by a two-position switch on the operator's console.
- Infinitely variable machine speed and direction of travel controlled by propel lever and speed dial.
- Load control system, controlled by Electronic Control Module (ECM), matches propel speed to load on the engine for maximum production.
- Track undercarriage – tracks are 720 mm (28.3") long, 225 mm (8.8") wide and feature replaceable polyurethane track pads.
- Wheel undercarriage – wheels have a diameter of 660 mm (25.9") and are 260 mm (10.2") wide.

Max. Speeds (forward and reverse):	
Track undercarriage	
Operating	27 mpm - 89 fpm
Travel	4.1 km/h - 2.5 mph
Wheel undercarriage	
Operating	46 mpm - 151 fpm
Travel	6.4 km/h - 3.9 mph

Rotor Drive System

Operates direct through a hydraulically actuated, dry clutch driving a planetary gear reducer.

Features

- Heavy-duty dry clutch mounts directly to the engine. Hydraulically actuated by a ON/OFF switch on the operator's console.
- Mechanical dry clutch consists of trapezoid pulleys, molded high-strength belt and a hydraulic-coupling dry clutch. The field-proven drive system delivers reliability and long service life.
- A drive train protection device protects rotor drive system, rotor and tools by instantly disengaging rotor drive whenever an abrupt drop in rotor rpm occurs.
- Molded six-rib high tensile strength drive belt drives the rotor through a drum drive gear reducer located inside the rotor mandrel.
- Hydraulically powered automatic drive belt tensioner prevents rotor drive belt slippage and reduces maintenance.
- Upper and lower sheaves are easily interchangeable for maximum torque with the toughest materials and different material sizing requirements.

Rotor Speed:	
@ 2200 engine rpm	118 rpm

Patent Owner, Guntert & Zimmerman - Ex. 2018, p. 12

Rotor Housing

- Rotor housing is made with hi-grade anti-wear material for long service life.
- Large discharge opening clears out the rotor housing fast for increased production and reduced tool wear.
- Side plate contact surfaces features wear-resistant materials for reduced wear and longer service life.
- Floating moldboard with adjustable down pressure is standard.
- Height control for rotor door located at operator's station and at two ground level control stations.

Steering

Hydraulic power-assist steering with steering wheel on operator's console.

Features

- Double-acting steering cylinders control the front and right rear tracks.
- Steering of the right rear track is electronically controlled with angle adjusted in relation to the position of the front tracks.

Cutting Radius (to the right):

Track undercarriage	3.45 m (11' 3")
Wheel undercarriage	2.10 m (6' 8")

Hydraulic System

- Pumps for propel, collecting and upper conveyors, auxiliary hydraulics and cooling fan are installed on the engine mounting pad.
- Hydraulic oil cooler located at the rear of the machine is designed for efficient cooling and easy access for cleaning.
- Three-micron filtration on pressure side of auxiliary flow and seven-micron filtration on return side.
- Quick-connect hydraulic test ports simplify system diagnostics.

Conveyor System

- Collecting conveyor is driven by a high torque hydraulic motor to ensure maximum production and clearing out the rotor housing effectively.
- Variable belt speed control for collecting and front loading conveyors controls loading of milled materials to closely match material type and amount.
- Both conveyor belts can be reversed for quick clean out.
- Folding front loading conveyor facilitates machine transportation.

Collecting Conveyor

Width	Standard - 550 mm	21.6"
	Optional - 600 mm	23.6"
Speed	252 mpm	827 fpm

Upper Conveyor

Length	6.3 m	20' 6"
Width	600 mm	23.6"
Speed	252 mpm	827 fpm
Swing (from center)		41 degrees

Water Spray System

- Centrifugal pump supplies water to spray nozzles for dust control and belt lubrication.
- Water spray nozzles focuses the water spray in a flat fan pattern to the rotor for better cooling of cutting tools.
- Nozzles are easily removed for inspection and replacement without the need for tools.
- Standard system includes gauges to monitor water pressure, a low water level indicator and water control valves to conserve water usage.
- Water tank can be filled from the top of the machine or at ground level.

Brakes

Primary Brake Features

- Closed-loop hydrostatic drive provides dynamic braking during normal operation.

Parking Brake Features

- Spring-applied/hydraulically-released multiple disc type brake mounted on each gear reducer. Brakes are applied automatically when propel lever is in the neutral detent position.
- Secondary brakes are activated by a button on the operator's console, loss of hydraulic pressure in the brake circuit or when the engine is shut down.
- Propel pump is destroked when parking brake is engaged. Propel lever must be returned to neutral after brake is released before machine will propel.

Patent Owner, Guntert & Zimmerman - Ex. 2018, p. 13

Service Refill Capacities

	Liters	Gallons
Fuel tank	400	105
Cooling system	35	9.3
Engine oil w/filter	31	8.1
Propel planetary gear reducer (each)	0.9	0.24
Hydraulic tank	110	29
Water spray system	1060	280

Electrical

The 24-volt electrical system consists of two maintenance-free Cat batteries. Electrical wiring is color-coded, numbered and labeled with component identifiers. The starting system provides 750 cold cranking amps (cca). The system includes a 65-amp alternator.

Frame

Fabricated from heavy gauge steel plates and structural steel tubing. Track assembly features track frame stops to limit track angles, improving the machine's ability to propel out of deep cuts. Top of deck and steps feature non-skid treads for sure footing.

Rotor Specifications

- Tools are mounted in durable three-piece, quick release tool holders.
- Holders feature a tapered fit to maintain tightness in holder base.
- The quick release tool holders allow fast and easy replacement of tools.
- Large replaceable carbide faced loading paddles effectively moves milled materials onto collecting conveyor resulting in increased production.

Rotor

Cutting width	1000 mm	40"
Cutting depth	305 mm	12"
Number of tools		97
Tool spacing (tip)	15 mm	0.6"

Grade and Slope Control

Machine elevation – rotor depth and cross slope controlled manually by operator is standard. Automatic rotor depth and slope control is optional and features electronic over hydraulic control. Slope sensor adds versatility.

Features

- Machine elevation controls located on the operator's console allows rotor depth and cross slope to be controlled manually. Visual depth gauge displays depth of cut.
- The optional AUTOMATIC grade and slope control automatically controls rotor depth and cross slope to a preset cutting depth. Setting cutting depth is easily accomplished first in manual mode by using the adjustment knob on the controller.
- Wire rope contacting grade sensor measures side plate movement that enables the entire length of the side plate to become a mini averaging ski for optimum grade matching.

Optional Equipment

Note: Some options listed may be an option in some areas and standard in others. Consult your dealer for specifics.

Automatic Grade and Slope System. Automatically controls rotor depth and cross slope to a preset cutting depth. Contacting wire rope grade sensor measures side plate movement that enables the entire length of the side plate to become a mini averaging ski for optimum grade matching. System also includes a cross slope sensor to meet slope applications/requirements in job specifications.

Digital Cameras. Two high-definition digital cameras fitted to the rear of the machine provide a view of the ground behind the rear door and area behind the machine.

Hydraulically Operated Canopy. Full width canopy with two side extending wings and front and rear windshields provides optimum operator comfort and protection. Canopy can be hydraulically lowered for transportation.

High Pressure Washdown System. This system uses water from the water spray system tank to help with machine clean-up at the end of each day's operation. System includes a spray wand and hose with a quick-connect coupler.

Color Graphic Display. A large display, easily visible in direct sunlight, provides operating parameters in color for machine and engine diagnostics. The display presents a single interface for service diagnostics and calibration.

Water Tank High Capacity Refilling Pump. A hydraulically driven water pump provides fast water tank refilling

Roading Light Package. Front and rear-facing headlights with directional indicators. Light package used for highway transport purposes only.

600 mm (23.6") Wide Collecting Conveyor. The extra width of this conveyor provides an increase in material removal volume for greater efficiency.

Patent Owner, Guntert & Zimmerman - Ex. 2018, p. 14

Dimensions

Operating		
A Overall length (conveyor up)	10.7 m	35' 1"
B Overall machine width (right rear leg in)		
Track undercarriage	1.98 m	6' 5"
Wheel undercarriage	2.0 m	6' 6"
C Maximum height (canopy raised)	3.4 m	11' 2"
D Minimum height	2.38 m	7' 8"
E Maximum truck clearance	4.8 m	15' 7"
Conveyor swing	41 degrees left or right of center	
Collecting conveyor width	550 mm	21.6"
Upper conveyor width	600 mm	23.6"
Inside turning radius		
Track undercarriage	3.45 m	11' 3"
Wheel undercarriage	2.10 m	6' 8"
Shipping		
F Length of base machine	5.33 m	17' 5"
G Length (conveyor folded)	8.5 m	27' 8"
H Height (conveyor folded)	3.1 m	10' 1"
I Height (canopy folded)	3.1 m	10' 1"
J Maximum width		
Track undercarriage	2.5 m	8' 2"
Wheel undercarriage	2.4 m	7' 9"

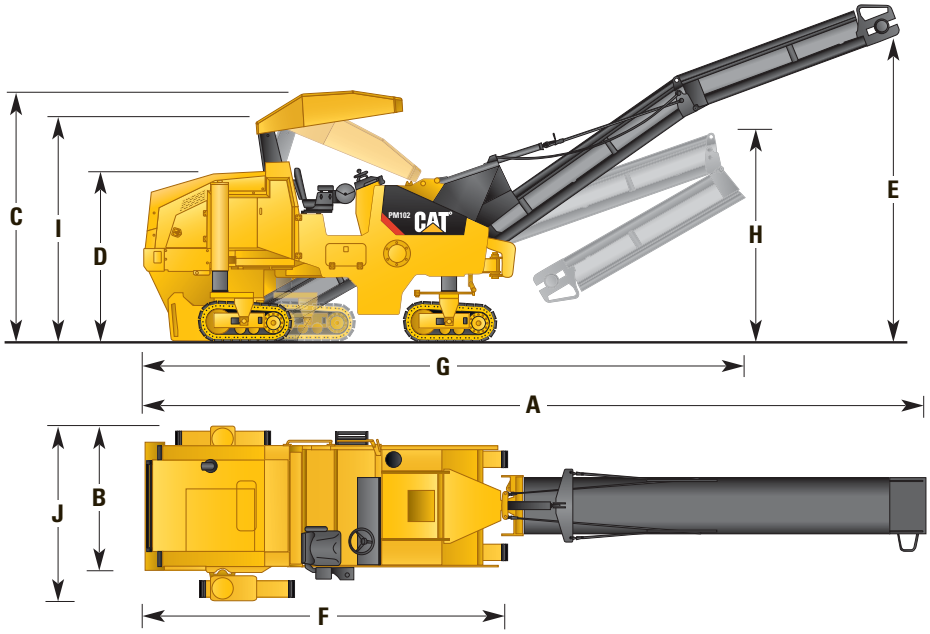

Weights

Operating Weights		
Track undercarriage	17 600 kg	38,810 lb
Wheel undercarriage	17 100 kg	37,705 lb

Weights shown are approximate and include coolant, lubricants, full fuel tank, full water tank and a 75 kg (165 lb) operator.

Shipping Weights		
Track undercarriage	17 100 kg	37,705 lb
Wheel undercarriage	16 400 kg	36,160 lb

Weights shown are approximate and include coolant, lubricants, 50% fuel level and empty water tank.

Patent Owner, Guntert & Zimmerman - Ex. 2018, p. 15

Caterpillar offers a comprehensive line of profilers.

The PM200 and PM201 are designed to have the best productivity, reliability, versatility, visibility and ease of operation in their class.

Contact your local Caterpillar dealer to learn more about the complete line of Caterpillar Paving Products.

PM102

Operating Weight	17 600 kg	38,810 lb
Gross Power (SAE J1995)	168 kW	225 hp
Cutting Width	1000 mm	40"
Cutting Depth	305 mm	12"
Propel Speeds		
Operating	27 mpm	89 fpm
Travel	4.1 km/h	2.5 mph
Rotor Drive	Six-rib high tensile belt	
Clutch	Hydraulic/dry multi-disc	

PM200

Operating Weight	30 900 kg	68,135 lb
Gross Power (SAE J1995)	429 kW	575 hp
Cutting Width	2010 mm	79"
Cutting Depth	320 mm	12.6"
Propel Speeds		
Operating	38 mpm	125 fpm
Travel	5.9 km/h	3.6 mph
Rotor Drive	Two six-rib high tensile belts	
Clutch	Hydraulic/wet multi-disc	

PM201

Operating Weight	39 165 kg	86,360 lb
Gross Power	485 kW	650 hp
Cutting Width	2100 mm	83"
Cutting Depth	305 mm	12"
Propel Speeds		
Operating	40 mpm	132 fpm
Travel	6.0 km/h	3.7 mph
Rotor Drive	Eleven-rib high tensile belt	
Clutch	Hydraulic/wet multi-disc	

© 2007 Caterpillar
All Rights Reserved.

For more complete information on Cat® products, dealer services, and industry solutions, visit us on the web at www.cat.com

Materials and specifications are subject to change without notice. Featured machines in photos may include additional equipment. See your Caterpillar® dealer for available options.

QEHQ1259-01 (2/07)
(Replaces QEHQ1169)

CAT, CATERPILLAR, their respective logos, "Caterpillar Yellow" and the POWER EDGE™ trade dress, as well as corporate and product identity used herein, are trademarks of Caterpillar and may not be used without permission.

CATERPILLAR®