NEW GP3 SLIPFORM PAVER

GOMACO®

The Worldwide Leader in Concrete Paving Technology

GP3 Slipform Paver

The new GOMACO GP3 is designed for paving up to 30 feet (9.14 m) wide and is designed to accommodate multiple width changes.

- GOMACO roller frame with Smart Cylinders for dual telescoping capability.
- Smart Telescoping for accurate frame widening and automatic width reference for steering setup.
- Smart Pivot Arms for leg positioning with G+® controls and hydraulic rotational swing.
- Extreme Steering capabilities with hydraulic track rotation, GOMACO selective steer, and G+ controls.
  Radial Position Tracking with G+ automatic directional sensing.
- Load-sensed hydraulics for maximum performance and optimized for fuel efficiency.
- Tier 4 ready.
- New hose and cable management features for hydraulic hose routing and frame cable organization.
- Retractable console to reduce shipping width.
- T-Beam mounting rail incorporated into the telescoping frame.
- G+ quiet running technology.
- Isolated operator's platform for operator comfort.
- Easy access to operator's platform from both sides and rear of the GP3.
- G+ Connect™ for smart accessories and all guidance systems.
- IDBI capable for up to 24 feet (7.32 m) wide.

HW-071545-D3

The modular frame on GOMACO's GP3 has telescoping capabilities up to seven feet (2.13 m) on each side.

HW-081503-D8

The Smart Width provides easy, accurate width change setup and also a reference for G+ to control proper steering and track speeds at varying widths of the paver.

HW-071542-D17

The GP3 offers a 42 inch (1067 mm) hydraulic leg height adjustment along with a manual leg adjustment of 36 inches (914 mm).

HW-071526-D16

The Smart Pivots and Smart Track Rotation now let the G+ system automatically control the direction and speed of track travel through a radius.

Patent Owner, Guntert & Zimmerman - Ex. 2029, p. 2

Transport Mode

The GP3 slipform paver is designed for easy transport. A retractable, sliding console reduces the shipping width of the machine. The paver can be switched to the transport mode by simply driving the legs around to the transport position. After the legs are in the transport position, G+ travel is switched to "transport" for complete control. The operator can take this paver to the transport mode in minutes without assistance.

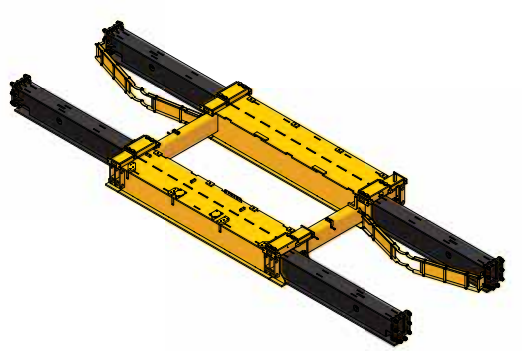

Smart Frame Widening

G+ knows the width of its dual telescoping frame. Changing the width of the mainframe is accomplished with the Smart Cylinders and GOMACO roller frame. The GP3 can telescope up to seven feet (2.13 m) on each side of the frame for a total of 14 feet (4.27 m) of automatic frame widening.

The Smart Width provides easy, accurate width change setup and also a reference for G+ to control proper steering and track speeds while turning a radius at varying widths of the paver.

Smart Leg Positioning

Pivot arms for the paver legs feature sensored, hydraulic rotational drives. These Smart Pivots provide the G+ controls with information on the angle of rotation, which coupled with the track rotation sensors, maintain the tracks in the straight-ahead line for steering.

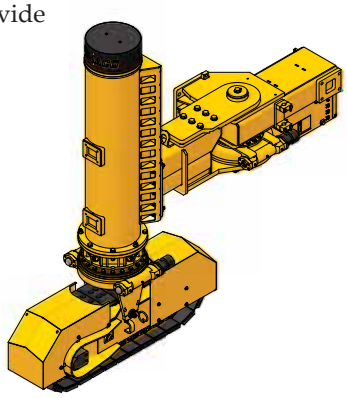

Smart Track Steering

Track steering and rotation is accomplished with sensored, hydraulic rotational drives. This Smart Track Rotation provides the G+ controls with exact track location and position. Extreme steering is now possible with the tracks having the ability to steer farther than ever before.

Smart Leg Pivoting and Smart Track Rotation now lets the G+ system automatically control the direction and speed of each individual track as it travels through a radius.

GOMACO's Selective Steer Controls

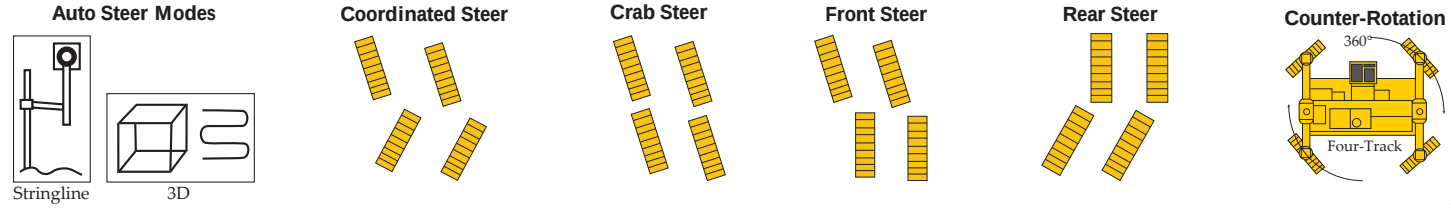

Sensored Leg Pivots and Track Rotation

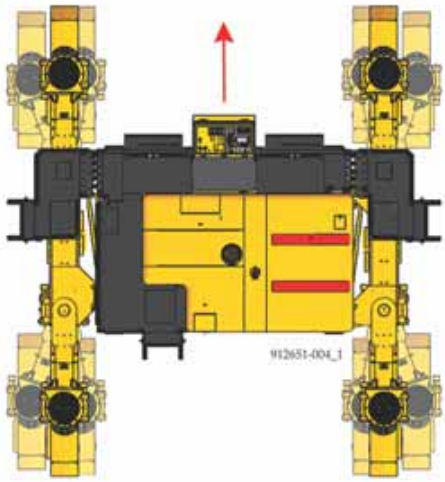

Sensored steer feedback with sensored leg pivots provide continuous reference for the straight-ahead track positioning.

Transverse Mode

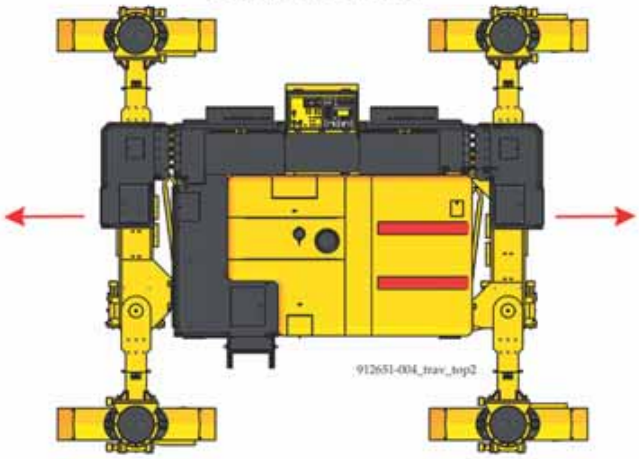

Full-steer tracks are turned perpendicular to the straight-ahead line. The G+® control system recognizes the track positioning and provides automatic steering control in the transverse mode.

Transport Mode

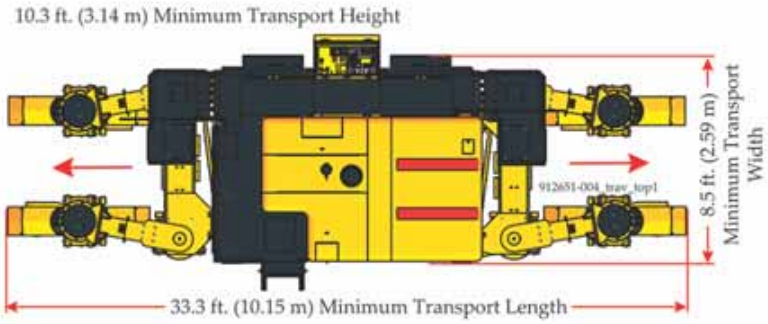

Full-steer tracks and hydraulic rotational sensored pivot arms allow the legs to be driven to the transport position. Track direction of travel and steering control is automatic with the G+ control system.

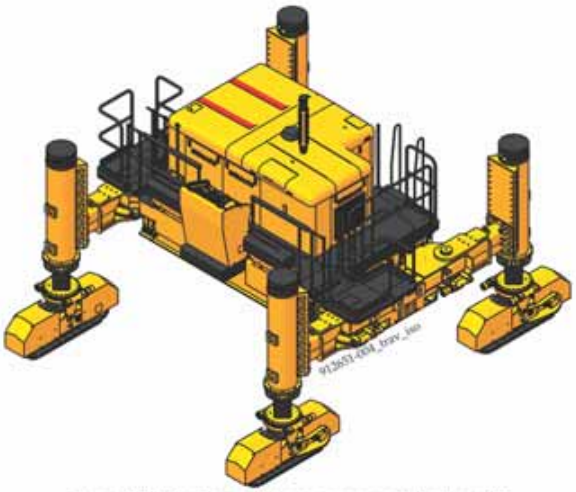

The GP3 design utilizes sensored, hydraulic rotational drives for radial swing on the pivot arms and also for the track rotation.

Operational Dimensions with a 24 ft. (7.32 m) 3100 Series Open-Front Mold
*All operational and transport dimensions are nominal

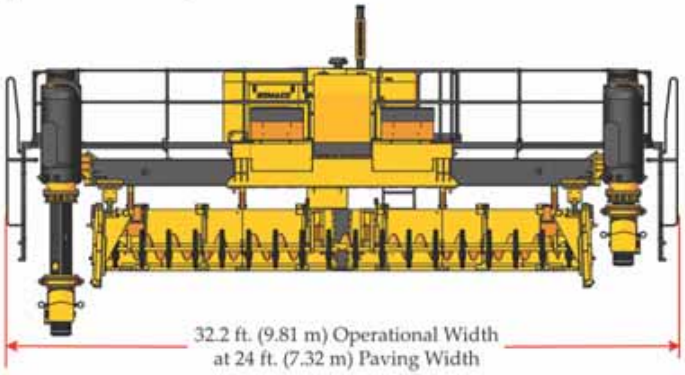

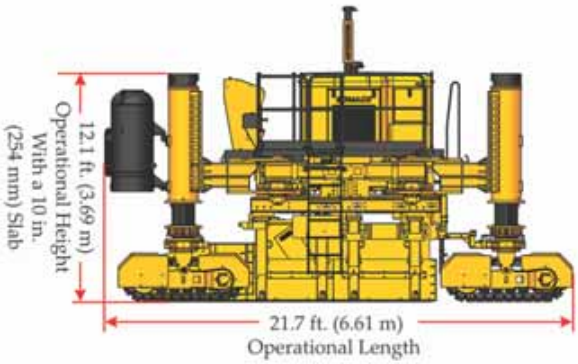

GOMACO's GP3 Slipform Paver

- Each leg has 42 in. (1067 mm) hydraulic height adjustment and manual height adjustment up to 36 in. (914 mm) for a total height adjustment of 78 in. (1981 mm).
- Vibrator modules are positioned across the front of the platform for ease in operational visibility and accessibility.
- Revolutionary cooling package module incorporates variable speed fan(s) for noise reduction and added cooling capacity.
- GOMACO's exclusive G+ control system. Retractable console to reduce shipping width.
- Isolated operator's platform for operator comfort.
- Extreme steering capabilities with hydraulic track rotation, GOMACO selective steer, and G+ controls.
- T-beam mounting rail incorporated into the telescoping frame.
- GOMACO roller frame with Smart Cylinders for dual telescoping capabilities.
- Smart Telescoping for accurate frame widening and automatic width reference for steering setup.
- Tier 4 Ready
- Split, pressure-compensated sideplates.
- Pivot arms for the paver legs feature sensored, hydraulic rotational drives.
- Multi-positioning pivoting ladder allows variable degrees of angle for safety and ease in climbing and access to the operator's platform. For minimum-clearance paving conditions, the ladder can be vertically positioned tight to the machine.

GOMACO's 3100 and 5000 Open-Front Mold

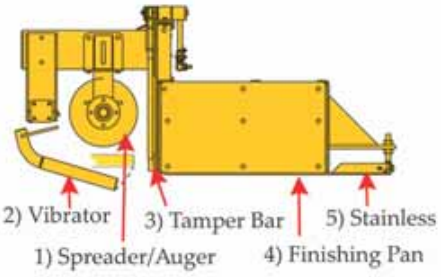

(1) The **spreader/auger** on the 3100 series open-front mold is a 14 inch (356 mm) auger with maximum speed of 33 rpm @ 12 gpm (45 Lpm) flow. The spreader/auger on the 5000 series open-front mold has a 16 inch (406 mm) auger and maximum speed of 28 rpm @ 12 gpm (45 Lpm) flow.

(2) **Vibration** is provided to the throat area of the mold for consolidation of concrete. The vibrators, with an automatic on/off control, activated with machine movement, are hydraulically powered with variable speeds up to 10,500 vpm. The vibrator positioning is hydraulically controlled for ease in start-up and finish.

(3) The GOMACO **tamper bar** system tamps down the aggregate level with the surface of the pan. The tamper bar is hydraulically powered with an automatic on/off control, activated with machine movement.

(4) The **finishing pan** serves to level the concrete. The 3100 series mold and stainless from front to back is 48 inches (1219 mm). The 5000 series mold and stainless is 60 inches (1524 mm) from front to back.

(5) Adjustable **stainless steel** is exclusive to the GOMACO system. This seals the surface and provides the troweled GOMACO finish out of the mold.

Optional 5400 Series Paving Mold

- Box design with durable 0.5 inch (13 mm) thick paving skin.
- Vertically-adjustable mold mount for precise leveling of mold to machine.
- Telescoping end sections with 24 inches (610 mm) of width variation on each side are optional.
- Edge slump adjustment.
- Hydraulic Vertical Hinged Sideplates, self-contained inside the mold for track clearance.
- Split, pressure-compensated sideplates.
- Folding sideplate wings for transporting without removing.
- Pivoting mold mounting beam to eliminate stress points, created by crowning the mold.
- Self-supported TA is hydraulically driven with 3.5 inch (89 mm) ACME screws for up to a six inch (152 mm) crown.
- Front and rear top T-bar on mold for attaching accessories and structural integrity.
- Inserts are bolted together with front and rear alignment pins for easy mold assembly.
- Vibrator mounting tube attaches to T-bar on mold.
  - Vertical vibrator lift.
  - Rear lubrication system with grease zerks accessible from the work bridge.
- Tamper bar optional.
- Trailing stainless optional.

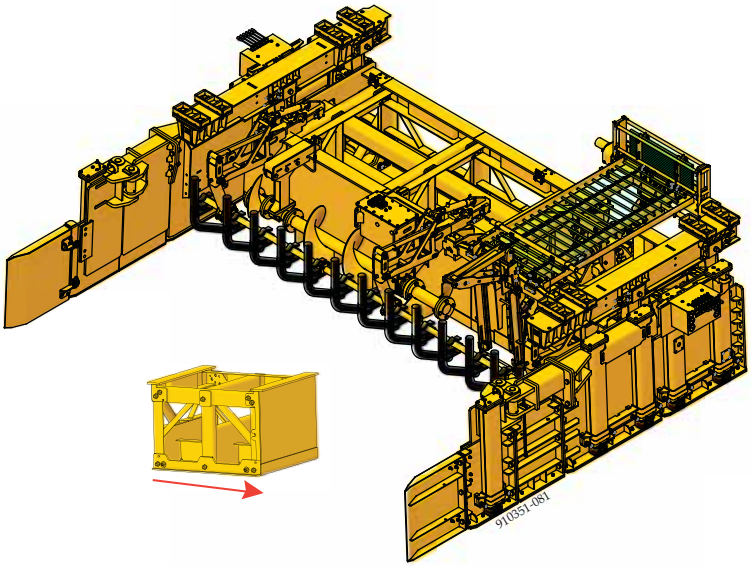

The box design of the 5400 series mold has a 54 inch (1372 mm) finishing length front to back and is equipped with a durable 0.5 inch (13 mm) thick paving skin that is welded to the mold to increase the structural integrity.

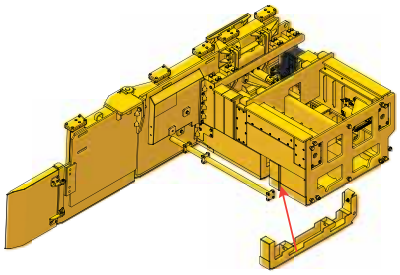

Telescoping End Sections are optional - Inserts are available in quarter-inch (6 mm), half-inch (13 mm), three inch (76 mm), or six inch (152 mm) increments. This drawing shows a six inch (152 mm) insert for the telescoping end section.

This 5400 Series paving mold is equipped with two telescoping end sections, and has two 36 inch (914 mm) and two 24 inch (610 mm) mold sections. The 5400 series paving mold also features edge slump adjustment and a self-supported TA. 5400 series paving molds can also be equipped with one or more bar inserters. The mold above is equipped with a center-mounted 5400 series bar inserter.

The end section can be telescoped from five to seven feet (1.52 to 2.13 m).

A six inch (152 m) insert is lifted and hooked into place after the end section telescopes out.

Telescoping Mold Sections are optional - Two options are available for the telescoping mold section. One option is a five to eight foot (1.5 - 2.44 m) section, and the other option is six to ten foot (1.83 - 3 m).

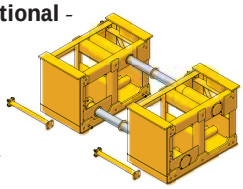

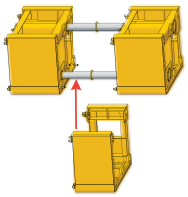

These telescoping mold inserts are shown in two foot (0.61 m) and six inch (152 mm) sections.

The telescoping mold section is designed with a structural integrity that is unmatched in the industry.

Introductory Specifications

ENGINE
Consult for options available.

SERVICE CAPACITIES
Fuel reservoir: 160 gal. (605.7 L).
Oil reservoir: 230 gal. (870.6 L).

AUTOMATED CONTROL SYSTEM
Type: Electronic-over-hydraulic.
Controls: GOMACO's exclusive G+® control system features self-diagnostics for grade and steering and smart steer controls for paving accuracy and ease in operation. It features multi-language, metric or imperial settings, and a 6.5 in. (165 mm) anti-glare display screen.
Control indicators: Color graphical performance indicators allow operator to monitor control signals for machine guidance on stringline or 3D.

TELESCOPING FRAME
Telescoping: 16 in. (406 mm) deep modular roller frame telescopes up to 7 ft. (2.13 m) on both sides for a total of 14 ft. (4.27 m) of telescoping capability.
Paving widths: 12 ft. (3.66 m) to 26 ft. (7.92 m) optional to 30 ft. (9.14 m) with additional frame inserts.

WATER SYSTEM
High-pressure water system: Two 100 gal. (378.5 L) tanks. High-pressure with trigger gun control and adjustable pressure unloader for up to 2000 psi.
Option: Two 100 gal. (378.5 L) tanks with hoses, nozzles, and 14.5 cfm (.41 cmm) air compressor for pressurized spray system.

VIBRATORS
Type: Hydraulic motor-in-head powering an eccentric weight.
Quantity: 16 vibrators and 20 vibrator circuits are standard.

AUGER SYSTEM
Type: Electronic-over-hydraulic circuitry. Reversible, hydraulically-powered split auger.

TAMPER SYSTEM
Type: Electronic-over-hydraulic circuitry. Hydraulically-powered split vertical tamping system.
Tamper speed: Adjustable up to 120 strokes per minute.

SLIPFORM MOLD
One right-hand drive section, one left-hand drive section, and one center insert with power transition adjuster (PTA) section. Balance of inserts per customer specifications. Hydraulically pressure-compensated sideplates with variable depth adjustments. Additional insert sections for paving widths up to 30 ft. are available.

International mold: One right-hand drive section, one left-hand drive section, and one power transition adjuster (PTA) section. Balance of metric inserts per customer specifications. Hydraulically pressure-compensated sideplates with variable depth adjustments. Additional insert sections for paving widths up to 9.1 meters optional.

FOUR-TRACK SYSTEM
Type: Four gear-driven.
Overall track length: Series 2 track, 6.3 ft. (1.92 m) includes track fender.
Track pad width: 11.8 in. (300 mm).
Track speed: Variable up to 91 fpm (27.7 mpm).
Ground pressure: 35.1 psi based on 74,600 lb. (33,838 kg) machine with mold and weight evenly distributed.

Leg height adjustment: 42 in. (1067 mm) hydraulic adjustment and manual adjustment up to 36 in. (914 mm) for a total height adjustment of 78 in. (1981 mm).

DIMENSIONS
Operational with 24 ft. (7.32 m) 3100 series open-front mold, transport without mold.
Operational length: 21.7 ft. (6.61 m).
Operational width: 32.2 ft. (9.81 m).
Operational height: 12.1 ft. (3.69 m) with 10 in. (254 mm) slab.
Minimum transport length: 33.3 ft. (10.15 m).
Minimum transport width: 8.5 ft. (2.59 m).
Minimum transport height: 10.3 ft. (3.14 m).

WEIGHTS (approximate)
Transport weight: 57,000 lbs. (25,855 kg) without mold.
Operational weight: 74,600 lbs. (33,838 kg) with 24 ft. (7.32 m) 3100 series open-front mold.
Note: Transport and operational weights and dimensions are variable, depending on the number of machine options.

ATTACHMENTS/OPTIONS
5000 series mold.
5400 series mold.
VHS, vertical hinged sideplates.
Auto-Float® attachment.
Computer-controlled power transition adjuster (PTA).
Hydraulic edge slump.
Ratchet-style edge slump.
Frame extensions.
Grade averaging ski.
IDBI dowel bar inserter.
GOMACO Smoothness Indicator (GSI®).
Sideplate extensions for bar insertion.
Manual bar inserter.
Air bar inserter.
Hydraulic bar inserter.
Bolt-on keyway attachments.
Spreader plow.
5400 series tie bar inserter.

Other options are available to customize the machine to accommodate applications and customer needs.

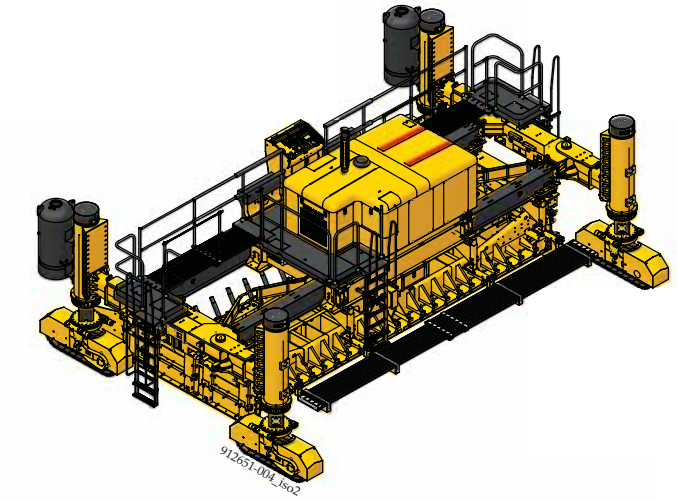

HW-071529-D19

HW-071530-D18

The left front leg was bumped out through the G+ control system to maintain travel on the existing slab. Then the left front leg was bumped back in line to travel down the wood planking. The sensored pivots and tracks provided information to keep the track in the straight ahead reference line.

HW-071532-D10

The edge of the slab was maintained as the left side tracks traveled down off the existing slab.

HW-071548-D7

GP3 slipforms a 15 foot (4.57 m) wide by 10 inch (254 mm) deep lane addition and ramp.

Cover Photo: HW-071542-D17

Manufactured under one or more of the following U.S. or foreign patents: 5,924,817; 5,941,659; 6,099,204; 6,450,048; CA2,211,331; 7,044,680; 7,284,472; 7,517,171; 7,845,878; 7,850,395; CA2,864,902; CA2,591,177; 8,855,967; 8,682,622; 9,051,696; 9,180,909; 9,200,414; and patents pending.

GOMACO, Auto-Float, GOMACO Smoothness Indicator (GSI), and G+ are registered trademarks of GOMACO Corporation.

GOMACO Corporation reserves the right to make improvements in design, material, and/or changes in specifications at any time without notice and without incurring any obligation related to such changes. Performance data is based on averages and may vary from machine to machine.

Printed in U.S.A. © 2016 (1 GOMACO Corp.)

Worldwide Headquarters
GOMACO Corporation
PO Box 151
Ida Grove, IA USA 51445
Ph: 1-712-364-3347
www.gomaco.com
E-mail: info@gomaco.com

European Headquarters
GOMACO International Ltd.
Units 14 & 15
Avenue One, Station Lane
Witney, Oxon, OX28 4XZ, United Kingdom
Ph: 44-1993-705100
E-mail: pavinguk@gomaco.com

-- DESIGNED FOR SAFETY --

The GP3 is carefully designed to give years of dependable and safe service. The emergency stop buttons are on the operator's console and on the corners of the machine, which are easily accessible from the ground level. The machine is equipped with a backup alarm, which is designed to alert personnel around the machine when the tracks are set to operate in reverse. Other safety features include track guards, warning decals, operator horn, an operator's manual, and a safety manual. GOMACO machines are also designed to provide the operator with excellent visibility over the entire paving operation.

The Worldwide Leader in Concrete Paving Technology

GOMACO Corporation's Quality Management System Is ISO 9001 Certified By The American Systems Registrar.

Quality Policy: We Shall Meet Or Exceed Our Customers' Expectations.