PM102

Cold Planer

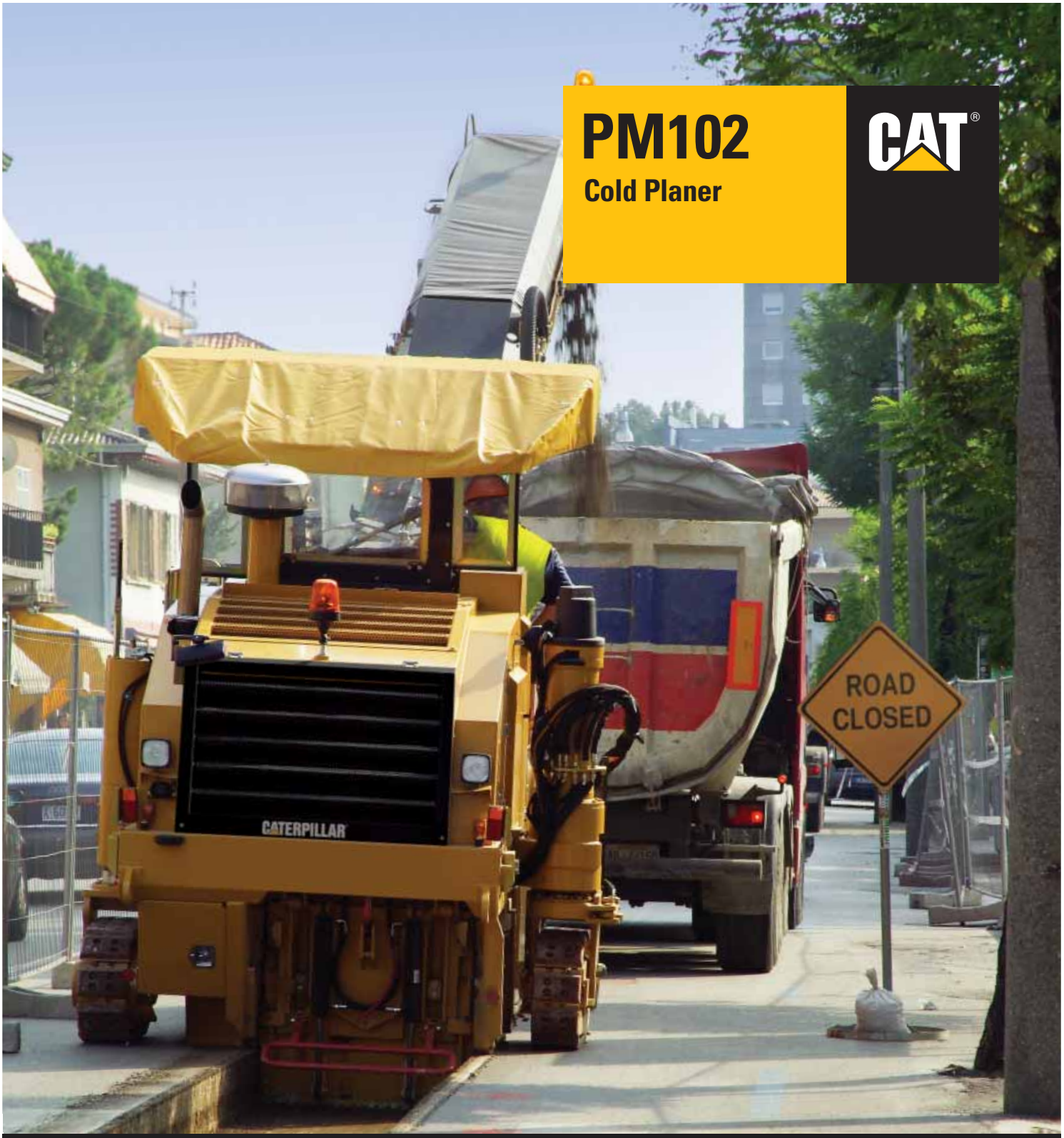

Cat® C7 Engine with ACERT™ Technology	
Gross Power (SAE J1995) at 2200 rpm	168 kW/228 hp
Net Power (ISO 9249) at 2200 rpm	156 kW/212 hp
Operating Weight	17 600 kg
Rotor Width (maximum)	1000 mm
Rotor Depth (maximum)	305 mm

PM102 Cold Planer

The PM102 combines enhanced production capabilities, optimized performance and simplified service to complete tough milling applications with productive results.

C7 Engine with ACERT Technology

ACERT Technology works at the point of combustion to optimize engine performance and provide low exhaust emissions. The C7 engine with ACERT Technology provides clean burning power. **pg. 4**

Rotor Drive

A Cat® dry clutch with automatic belt tension adjustment delivers efficient and reliable power to the pavement. The rotor drive consists of field-proven Caterpillar components for long service life. **pg. 5**

Loading Conveyor

The PM102 features a folding front loading conveyor for easy transportation. The conveyor swings 41 degrees to the left or right to meet your job requirements. **pg. 7**

Propel System

Propel pump provides balanced flow to dual displacement drive motors on each track. Provides superior tractive effort on slippery surfaces. The electronically controlled load sensing system matches propel speed to load on rotor for maximum production. **pg. 5**

Rotor

Rotor with quick release conical tool holders for quick and easy tool replacement. **pg. 6**

Anti-slab and Collecting Conveyor

A large discharge opening and wide collecting conveyor belt clear out the cutter box fast. Water spray system for lubrication, cooling and dust reduction. **pg. 7**

Patent Owner, Guntert & Zimmerman - Ex. 2033, p. 2

Operator's Station

Ergonomic design emphasizes comfort, visibility and easy operation. Machine controls are grouped and conveniently located to enhance operator productivity and reduce fatigue. **pg. 8**

Steering Right Rear Track

Compact dimension and steering right rear track provides optimum machine handling. The steering right rear track feature also facilitates precise control and operation in confined areas. **pg. 9**

Serviceability

The power-assisted engine hood opens wide and provides exceptional access to the engine, hydraulic pumps and daily service points. Hydraulic rotor service door provides convenient access to the rotor for easy cutting tool removal and replacement.
The rotor service door also provides easy access to the water spray nozzles for inspection and replacement without the need for tools. **pg. 11**

Flush Cutting Feature

Flush cutting operation with hydraulic control allows the PM102 to be used up close to a curb, wall or guard rail.
pg. 9

Automatic Grade and Slope Controls

The optional grade and slope systems provide precise control of rotor to a preset cutting depth and cross slope. Remote mounted control boxes allow simple operation from either the operator's station or ground level.
pg. 10

Reliability and durability you expect.

Proven components and technology ensure maximum performance in the most demanding job specifications. The compact sized PM102 performs full-depth removal of asphalt and concrete pavements with optimum productive results.

Patent Owner, Guntert & Zimmerman - Ex. 2033, p. 3

C7 Engine with ACERT Technology

ACERT Technology maintains engine performance, efficiency and durability while reducing emissions. European EU Stage IIIA and China Stage III emission standards for off-road applications.

The ADEM™ A4 electronic control module. This module manages fuel delivery, valve timing and airflow for efficient performance per liter of fuel used. The control module provides flexible fuel mapping, allowing the engine to respond quickly to varying application needs. It keeps track of engine and machine conditions while keeping the engine operating at peak efficiency.

Engine. EU Stage IIIA and China Stage III compliant C7 engine with ACERT Technology combines proven systems with innovative new technologies to precisely deliver fuel to the combustion chamber. It maintains engine performance, efficiency and durability while dramatically reducing emissions.

The Cat C7 is a 7.2 L displacement, 6-cylinder, electronically governed engine. Electronic fuel injection is provided through the well-proven Caterpillar hydraulically actuated, electronically controlled unit injection (HEUI) system. A wastegate turbocharger, equipped with a titanium wheel for improved durability, combined with air-to-air aftercooling (ATAAC) provides consistent high horsepower with increased altitude capability.

Optimum power. The engine performs at a full-rated gross power of 168 kW (228 hp) at 2200 rpm. Engine power curve is optimized for milling applications providing optimum power while keeping the engine operating at peak efficiency.

High cylinder pressures. High cylinder pressures combined with tightly controlled tolerances promote extremely efficient fuel burn, less blow by and lower emissions.

Hydraulically Actuated Electronic Unit Injectors (HEUI). The HEUI system has been at work in Cat engines across the product line with a proven track record of consistent, durable, reliable performance.

Precise multiple injection fuel delivery. Combustion chamber temperatures are lowered by precisely shaping the combustion cycle generating fewer emissions and optimizing fuel combustion; translating into more work output for your fuel cost.

Turbocharged and air-to-air aftercooling. High horsepower with increased response time is assured while keeping exhaust temperatures low for long hours of continuous operation.

Engine Block and Pistons. The grey cast iron engine block is made of the same material as the cylinder heads. Wall diameters are thicker than in previous designs while adjustments have been made to reduce sound levels and increase rigidity. One-piece all-steel pistons are housed within a wet, replaceable cast iron cylinder liner constructed of high-strength, heat-treated castings. Steel-forged connecting rods are larger in diameter.

Easier service, maintenance and repair through monitoring key functions and logging critical indicators. Advanced electronic diagnostic capabilities are possible using Cat Electronic Technician.

Patent Owner, Guntert & Zimmerman - Ex. 2033, p. 4

Propel System

Hydrostatic drive with hydraulic flow provided by a variable displacement axial piston pump. Dual displacement drive motors on each track provides balanced tractive effort.

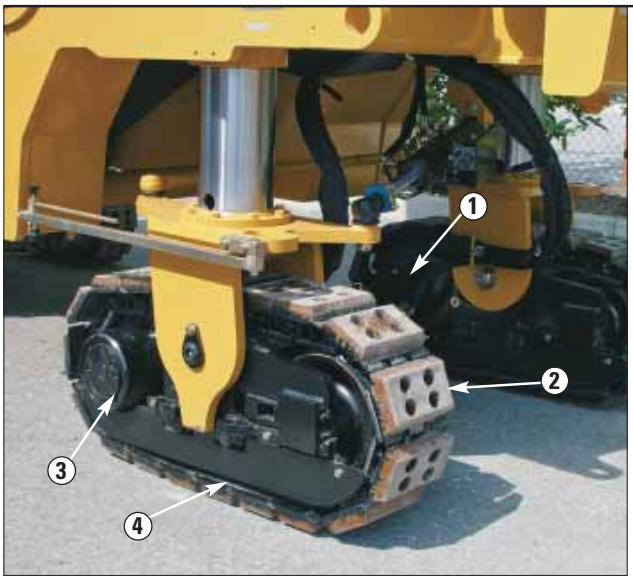

Load control system (anti-stall). The electronically controlled system matches propel speed to load on rotor for maximum production.

Two speed ranges. The machine operates at either maximum torque throughout the entire milling speed range or at a faster travel speed for moving around the job site.

Positive traction control (Flow divider). Equal hydraulic oil flow to each drive motor increases tractive effort in hard cutting applications and in slippery conditions. The positive traction control is actuated from the operator's console.

Polyurethane track pads. Track pads in polyurethane provide long service life and positive traction on all pavement surfaces.

1 Two Speed Drive Motor
2 Polyurethane Track Pads
3 Planetary w/Secondary Brake
4 Heavy-duty Rollers

Rotor Drive

Delivers maximum available horsepower to each cutting tool.

1 Upper Pulley
2 Molded Drive Belt
3 Lower Pulley
4 Tension Cylinder

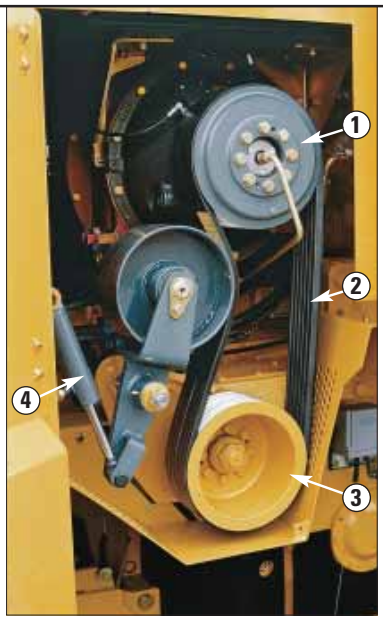

Mechanical dry clutch. The rotor drive consists of trapezoid pulleys, molded high-strength belt and a hydraulic-coupling dry clutch. The field-proven drive system delivers reliability and long service life.

Drive train protection. A drive train protection device protects rotor drive system, rotor and tools by instantly disengaging rotor drive whenever an abrupt drop in rotor rpm occurs.

Two cutting speeds. Upper and lower pulleys are easily interchangeable for maximum torque with the toughest materials and different material sizing requirements.

Molded six-rib high tensile belt. High tensile belt provides efficient transmission and long service life.

Automatic belt tension adjustment. The hydraulically powered automatic drive belt tensioner prevents rotor drive belt slippage and reduces maintenance.

Patent Owner, Guntert & Zimmerman - Ex. 2033, p. 5

Rotor

Designed for high production and long service life.
Quick release conical tool holders for quick and easy tool replacement.

97 carbide-tipped tools. Tools are mounted in durable three-piece, quick release tool holders and arranged in a triple wrap flighting pattern for maximum breakout force.

Quick release conical tool holders. A tapered fit maintains tightness in holder base. A fast, effortless and reliable tool removal is provided by the quick-release conical tool holder's tool removing system.

Large replaceable carbide faced loading paddles. Loading paddles effectively move milled material onto collecting conveyor resulting in higher production and less wear on inside of rotor chamber and cutting tools.

Optimum tool spacing. Triple-tree tool placement on rotor ends provides optimum tool spacing to clean up loose material and reduces wear on drum when maneuvering in the cut.

Pressurized water spray system. Standard water spray lubricates cutting tools and controls dust within the rotor chamber. Water spray nozzles are easily removed for inspection and replacement without the need for tools.

Patent Owner, Guntert & Zimmerman - Ex. 2033, p. 6

Anti-slab and Primary Collecting Conveyor

The collecting conveyor belt efficiently clears out the cutter box fast.
Water spray system for lubrication, cooling and dust reduction.

Optimum material sizing and gradation. The hydraulically operated anti-slab device prevents slabbing of the road surface, provides optimum material sizing and gradation, protects the collecting conveyor and ensures an optimum discharge opening to the rotor chamber.

Variable belt speed. The collecting conveyor, driven by a high torque hydraulic motor for maximum efficiency, features variable belt speed for optimum production in all applications. Reversible belt rotation control is also provided.

Optimum dust reduction. Standard pressurized water spray lubricates and controls dust on collecting belt. Water spray nozzles are easily removed for inspection and replacement without the need for tools.

Front Loading Conveyor

Folding loading conveyor simplifies machine transportation.
High capacity and versatility adds to productivity.

Folding conveyor. Machine transportation is made easier by the folding front conveyor that reduces the machine dimensions.

600 mm wide loading conveyor. Height adjustment is hydraulically controlled and two cylinders provide a 41 degree swing to the left and right.

Variable loading belt speed and reversible rotation. The front loading conveyor also includes variable belt speed and reversible belt rotation control. The loading belt speed is infinitely variable and provides optimum discharge capability for uniformly loading the haul truck.

Simplified conveyor removal. Quick-fitting hydraulics and mechanical conveyor components allow the front conveyor to be easily detached from the machine.

Patent Owner, Guntert & Zimmerman - Ex. 2033, p. 7

Operator's Station

Designed for efficiency, productivity and simple operation.

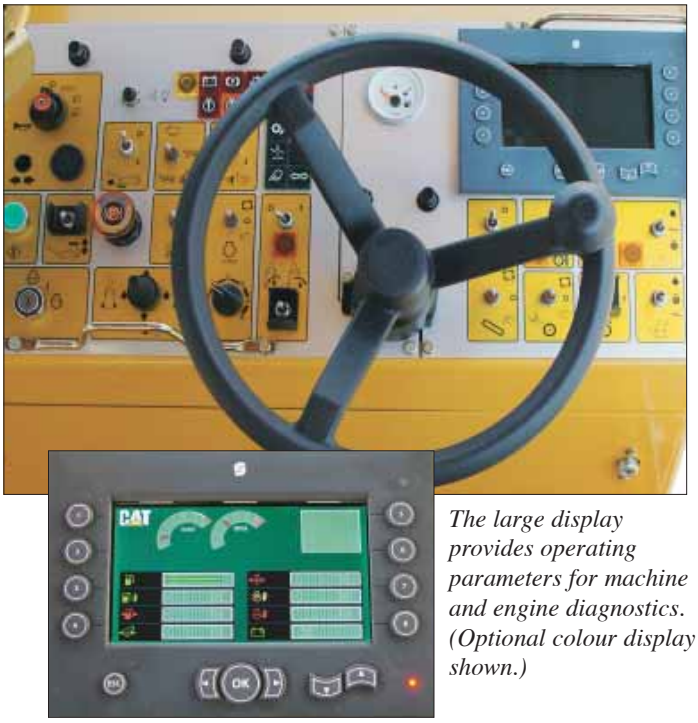

The large display provides operating parameters for machine and engine diagnostics. (Optional colour display shown.)

Ergonomic operator's station. The full-width operator's station provides a view of the front loading conveyor and side plates for precise and rapid positioning.

Seat. Durable suspension seat and armrest on both sides provides optimum operator comfort.

Warning horns and shut-down buttons. Located on the operator's station and at ground level control stations.

Hydraulically operated canopy option. Full-width canopy with two extending side wings and front windshield and rear window provides optimum comfort and protection. Canopy can be hydraulically lowered during transportation.

Operating controls. The distribution and clear instrumentation layout on the main and sidearm console control panels have been designed to ensure minimum operator effort and maximum automation. All gauges and displays are easily visible even in direct sunlight.

Graphic display. A large display, easily visible in direct sunlight, provides operating parameters for machine and engine diagnostics. The display presents a single interface for service diagnostics and calibration. Standard display is black and white; an optional colour display is available.

Computerized monitoring system. The system constantly monitors system pressures and engine condition with multiple modes of operation. Alerts the operator if a problem does occur with three levels of event information.

Standby control. A single switch control allows the operator to engage or disengage main operating functions (drive, water spray system, leveling system and conveyor rotation) for maximum automation.

Patent Owner, Guntert & Zimmerman - Ex. 2033, p. 8

Flush Cutting Feature

Full flush cutting operation with hydraulic control, allows the PM102 to be used up close to a curb, wall or guard rail.

Flush cutting. The right rear track can be swung in within the machine's cutting width for full flush cutting applications. With the right rear track swung in the machine can cut close to a wall, barrier or other vertical obstruction.

Exclusive Caterpillar single-piece swing-arm design. The swing-in arm mechanism ensures increased rigidity eliminating excessive track wear for increased component life.

Automatic control. The rear track swing-in system is automatic and controlled from the operator's station. The operator is not required to leave his seat while positioning the right rear track within the machine's cutting width.

Steering Right Rear Track

Optimum machine handling for precise control and production.

Precise control. A microprocessor electronically controls the steering angle of the right rear track. The rear track steering angle is automatically adjusted in relation to the position of the front tracks.

Enhanced steering ability. The machine's rear track steering feature facilitates operation in confined areas and ensures a close cut around roundabouts or turns. The right rear track steers in both positions, whether positioned within or outside the cutting width.

Patent Owner, Guntert & Zimmerman - Ex. 2033, p. 9

PM102 - Wheel Undercarriage

High travel speed reduces machine repositioning times.

Total traction. The hydrostatic transmission on all four wheels, via a flow divider, and self levelling front axle ensure positive traction and optimum performance in all applications.

Optimum maneuverability. The large, wide tread tyres provide optimum maneuverability on tight curves and traction when driving in and out of the trench.

High travel speed. The high travel speed of the PM102 reduces repositioning times and machine transfer on the jobsite.

Flush cutting. The right rear wheel support can be swung in within the machine's cutting width for full flush cutting applications. With the right rear wheel swung in the machine can cut close to a wall, barrier or other vertical obstruction.

Automatic Grade and Slope Control Option

The optional grade controls provide precise control of rotor to a preset cutting depth. System can be configured to control grade or cross slope.

Wire (yo-yo) contacting grade sensors. Wire grade sensor measures side plate movement that enables the entire length of the side plate to become an averaging device for accurate grade matching. Cross-slope sensor adds to system versatility.

Leveling control boxes. Two control boxes located at the operator's station, allow manual or automatic leveling adjustment. Constant read-out for rotor depth and cross-slope are displayed on each control box and is easily visible even in direct sunlight

1 Wire Controlled Contacting Grade Sensor
2 Leveling Control Boxes

Patent Owner, Guntert & Zimmerman - Ex. 2033, p. 10

Serviceability

Less time on maintenance means more time on the job.

Large engine service doors provide optimum access to engine and hydraulic components from ground level.

Large service doors. Large service doors provide optimum access to engine and hydraulic components. Engine side covers swing wide to allow ground-level access to engine and rear cover swings up for access to radiator and oil cooler.

Hydraulic rotor service door. The rotor service door opens wide for easy access to rotor for inspection and tool maintenance.

Electronic Control Module (ECM). ECM monitors machine systems and provides self-diagnostics for operator or service personnel.

All-weather connectors. Nylon braided wrap ensure electrical system integrity.

Visual indicators. Visual indicators allow easy check of water spray tank level and hydraulic oil tank level.

Accessory drive system. In an non-operational condition of the machine's microprocessor, full operational control of main machine functions is readily available for assisted machine movement for maintenance and servicing.

Quick-connect hydraulic test ports. Quick-connect feature simplifies system diagnostics.

Ecology drains. Environmental method to drain fluids. They are included on the radiator, engine oil pan, hydraulic and fuel tank.

S•O•S℠ ports. Scheduled Oil Sample ports allow for simple fluid collection of hydraulic oil.

Secure hose routing. Polyethylene routing blocks provide a secure routing to reduce rubbing and increase service life of hoses.

Maintenance-free Caterpillar batteries. Batteries are mounted at the rear of the machine. Cat batteries are specifically designed for maximum cranking power and protection against vibration.

Patent Owner, Guntert & Zimmerman - Ex. 2033, p. 11

Engine

Six cylinder Cat C7 with ACERT Technology, turbocharged air-to-air after-cooled diesel engine. Meets European EU Stage IIIA and China Stage III emission control standards.

Gross Power	2200 rpm
SAE J1995	168 kW/228 hp
Rated Net Power	2200 rpm
ISO 9249	156 kW/212 hp
EEC80/1269	156 kW/212 hp
Bore	110 mm
Stroke	127 mm
Displacement	7.2 liters

- All engine horsepower (hp) are metric including front page.
- Net power ratings are tested at the reference conditions for the specified standard.
- Net power advertised is the power available at the flywheel when the engine is equipped with alternator, air cleaner, muffler and fan.
- Derating is not required up to an altitude of 3000 m.
- Cold mode starting aid and dual fuel filters with water separator are standard.

Brakes

Primary Brake Features

- Closed-loop hydrostatic drive provides dynamic braking during normal operation.

Parking Brake Features

- Spring-applied/hydraulically released multiple disc type brake mounted on each gear reducer. Brakes are applied automatically when propel lever is in the neutral detent position.
- A loss of hydraulic pressure in the brake circuit is caused when the parking brake switch, located on the operator's console, is pushed in.
- Parking brake is automatically applied when the engine is shut down.
- Propel pump is de-stroked when parking brake is engaged. Propel lever must be returned to neutral after brake is released before machine will propel.

Steering

- Hydraulic steering with steering wheel on operator's console.
- Double acting hydraulic cylinders on front and right rear tracks.
- Rear right steering track is electronically steered with angle adjusted in relation to the position of the front tracks.

Minimum cutting radius

Track undercarriage (right)	3450 mm
Wheel undercarriage (right)	2100 mm

Hydraulic System

- Pumps for propel, collecting and upper conveyors, auxiliary hydraulics and cooling fan are installed on the engine mounting pad.
- Hydraulic oil cooler located at the rear of the machine allows easy access for cleaning.
- Three-micron filtration on pressure side of auxiliary flow and seven-micron filtration on return side.
- Quick-connect hydraulic test ports simplify system diagnostics.
- Scheduled Oil Sample ports allow for simple fluid collection of hydraulic oil.

Electrical

The 24-volt electrical system consists of two maintenance-free Cat batteries. Electrical wiring is colour-coded, numbered, wrapped in vinyl-coated nylon braid and labeled with component identifiers. The starting system provides 750 cold cranking amps (cca). The system includes a 65-amp alternator.

Frame

Fabricated from heavy gauge steel plates and structural steel tubing. Track assembly features track frame stops to limit track angles to improve machine's ability to propel up steep inclines and out of deep cuts. Top of deck and steps feature non-skid treads for sure footing.

Patent Owner, Guntert & Zimmerman - Ex. 2033, p. 12

Propel System

Hydrostatic drive with hydraulic flow provided by a variable displacement axial piston pump. Drive motors with planetary gear reduction on each track/wheel provides balanced tractive effort.

Features

- A variable displacement, axial piston pump with electric displacement control supplies pressurized flow.
- Positive traction control valve provides equal hydraulic oil flow to each drive motor to increase tractive effort in hard cutting applications and slippery conditions.
- Drive motors have two swashplate positions allowing operation at either maximum torque throughout the entire milling speed range or at a faster speed for moving around the job site.
- Gear selection controlled electrically by a two-position switch on the operator's console.
- Infinitely variable machine speed and direction of travel controlled by propel lever and speed dial.
- Load control system, controlled by Electronic Control Module (ECM), matches propel speed to load on the rotor for maximum production.

Max. Speeds (forward and reverse):	
Track undercarriage	
Operating	0-27 mpm
Travel	0-4.1 km/h
Wheel undercarriage	
Operating	0-46 mpm
Travel	0-6.4 km/h

Rotor Drive System

Operates direct through a hydraulically actuated, dry clutch driving a planetary gear reducer.

Features

- Heavy-duty dry clutch mounts directly to the engine. Hydraulically actuated by a ON/OFF switch on the operator's console.
- Mechanical dry clutch consists of trapezoid pulleys, molded high-strength belt and a hydraulic-coupling dry clutch. The field-proven drive system delivers reliability and long service life.
- A drive train protection device protects rotor drive system, rotor and tools by instantly disengaging rotor drive whenever an abrupt drop in rotor rpm occurs.
- Molded six-rib high tensile belt provides efficient transmission and long service life.
- Upper and lower pulleys are easily interchangeable for maximum torque with the toughest materials and different material sizing requirements.
- Hydraulically powered automatic drive belt tensioner prevents rotor drive belt slippage and reduces maintenance.

Conveyor System

- Collecting conveyor is driven by a high torque hydraulic motor that ensures even belt tracking and clears out the rotor housing effectively.
- Variable belt speed for collecting and front loading conveyors controls loading of milled materials to closely match material type and amount.
- Both conveyors feature reversible belt rotation for quick clean out.
- Folding front loading conveyor facilitates machine transportation.

Collecting Conveyor	
Width	
Standard	550 mm
Optional	600 mm
Speed	252 mpm

Loading Conveyor	
Length	6300 mm
Width	600 mm
Speed	252 mpm
Swing (from center)	41 degrees

Rotor Specifications

Rotor Drive System	
Rotor drive	
Six-rib high tensile belt	
Transmission	
Mechanical	
Clutch	
Hydraulic/dry multi-disc	
Speed at 2200 engine rpm	118 rpm

Rotor	
Cutting width	1000 mm
Cutting depth	305 mm
Number of tools	97
Tool spacing (tip)	15 mm

Rotor Housing

- Rotor housing is made with hi-grade anti-wear material for long service life.
- Large discharge opening clears out the rotor housing fast for increased production and reduced tool wear.
- Side plates contact surface in hi-grade anti-wear material for longer service life.
- Floating moldboard with adjustable down pressure is standard.
- Height control for rotor door located at operator's station and at two ground level control stations.

Patent Owner, Guntert & Zimmerman - Ex. 2033, p. 13

Water Spray System

- Centrifugal pump supplies water to spray nozzles for dust control and belt lubrication.
- Water spray nozzles focus the water spray in a flat fan pattern to the rotor for better cooling of cutting tools. Nozzles are easily removed for inspection and replacement without the need for tools.
- System includes gauges to monitor water pressure, a low water level indicator and water control valves to conserve water usage.
- The water pump automatically stops running when no water is left in the system.
- Water tank can be filled from the top of the machine or optionally at ground level.

Water Tank	
Capacity	1060 liters

Grade and Slope Control

Machine elevation – rotor depth and cross slope is manually controlled by operator. Automatic rotor depth and slope control is optional and features electronic over hydraulic control. System can be configured with grade and slope sensors. Slope sensor adds versatility.

Features

- Machine elevation controls located on the operator's console allows rotor depth and cross slope to be controlled manually. Visual depth gauge displays depth of cut.
- The optional AUTOMATIC grade and slope controls automatically control rotor depth and cross slope to a preset cutting depth. Setting cutting depth is easily accomplished first in manual mode by using the adjustment knob on the controller.
- Contacting (yo-yo) grade sensor measures side plate movement.

Optional Equipment

Some options listed may be an option in some areas and standard in others. Consult your dealer for specifics.

Automatic Grade and Slope System. Grade and slope controls automatically control rotor depth and cross slope to a preset cutting depth. System can be configured with contacting (yo-yo) grade sensors and slope sensor. A cross-slope sensor provides increased versatility.

Digital Cameras. Two high definition digital cameras fitted to the rear of the machine provide a view of the ground behind the rear door and area behind the machine.

High Pressure Washdown System. This system uses water from the water spray system to help with machine clean-up at the end of each day's operation. System includes a spray wand and hose with a quick-connect coupler.

Water Tank High Capacity Refilling Pump. A hydraulic driven water pump provides fast water tank refilling.

Water Tank Filling Port. Ground level water tank filling port.

Colour Graphic Display. A large display, easily visible in direct sunlight, provides operating parameters in colour for machine and engine diagnostics. The display presents a single interface for service diagnostics and calibration.

Roading Lighting Package. Front and rear lights with direction indicators for use while roading the machine.

Hydraulically Operated Canopy. Full width canopy with two side extending wings, front windshield and rear window provides optimum comfort and protection. The canopy can be hydraulically lowered during transportation.

600 mm Wide Collecting Conveyor. The extra width of this conveyor provides an increase in material removal volume for greater efficiency.

Patent Owner, Guntert & Zimmerman - Ex. 2033, p. 14

Dimensions

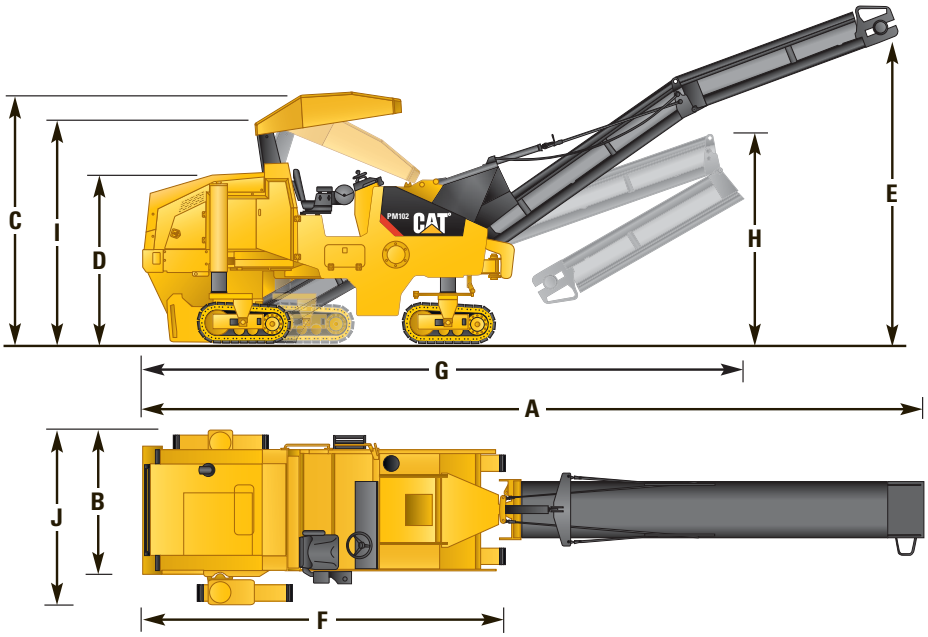

Operating	mm
A Overall Length (conveyor up)	10 755
B Machine width (rear right leg in)	
Track undercarriage	1980
Wheel undercarriage	2000
C Maximum height with canopy raised	3400
D Minimum height	2380
E Maximum truck clearance	4800
Conveyor swing/degrees left or right of center	41°
Collecting conveyor width	550/600*
Upper conveyor width	600
Inside cutting radius	
Track undercarriage	3450
Wheel undercarriage	2100

Shipping	mm
F Length of base machine	5330
G Length with conveyor folded	8505
H Height with conveyor folded	3100
I Height with canopy folded	3100
J Maximum width	
Track undercarriage	2535
Wheel undercarriage	2400
Track length	720
Track width	225
Wheel diameter	660
Wheel width	260

* optional.

Service Refill Capacities

	Liters
Fuel tank	400
Cooling system	35
Engine oil w/filter	31
Propel planetary gear reducer (each)	0.90
Hydraulic tank	110
Water spray system	1060

Weights

Operating Weights*	kg
Track undercarriage	17 600
Wheel undercarriage	17 100
Shipping Weights**	
Track undercarriage	17 100
Wheel undercarriage	16 400

Weights shown are approximate and include:
* coolant, lubricants, 50% fuel tank, 50% water tank and a 75 kg operator.
** coolant, lubricants, 50% fuel level and empty water tank.

Patent Owner, Guntert & Zimmerman - Ex. 2033, p. 15

For more complete information on Cat products, dealer services, and industry solutions, visit us on the web at www.cat.com

Materials and specifications are subject to change without notice. Featured machines in photos may include additional equipment. See your Caterpillar dealer for available options.

© 2015 Caterpillar -- All rights reserved

CAT, CATERPILLAR, their respective logos, "Caterpillar Yellow" and the POWER EDGE trade dress as well as corporate and product identity used herein, are trademarks of Caterpillar and may not be used without permission.

HEHG3265-3 (11/2015) hr

CATERPILLAR®