Vol. 37, No. 1

GOMACO WORLD

Introducing the NEW IDBI Attachment for the Commander III!

GOMACO EXHIBIT 1182
GOMACO v. G&Z
IPR2024-00835

Vol. 37, No. 1

GOMACO WORLD

3 GOMACO Versatility Showcased on I-64 Project
– *Fred Weber, Inc., and Millstone Bangert, Inc.*

7 Slipforming Canal in Northern Turkey
– *Basat Elektrik Uretim & Tic. Ltd. Sti.*

9 Double Variable Barrier Wall on Illinois' I-55
– *P.T. Ferro Construction Company*

11 Paving 99 Lane Miles (159 km) without a Grind
– *The Scruggs Company*

14 A High-Speed Connection Between France & Spain
– *Eiffage Travaux Publics*

18 Commander III Power on a Mono Project
– *Petra Contracting*

20 New GOMACO Innovations *(Cover photo CG-030918 D14)*
– *New IDBI Attachment for the Commander III and More!*

23 Around the World

Please visit our Web site at http://www.gomaco.com
GOMACO World magazine at http://www.gomaco.com/gomacoworld
GOMACO World Editor Kelly Krueger at kkrueger@gomaco.com

GOMACO World is published by GOMACO Corporation to inform readers of applied construction technology utilizing GOMACO equipment as well as innovations and concerns in the construction industry throughout the world.

All rights reserved. The contents of this publication may not be reproduced either in whole or in part without the consent of copyright owner. Printed in U.S.A. © 2009 GOMACO Corporation (06 CFX).
All stories written by the editor unless otherwise noted.

Address all communications to *GOMACO World* Editor. If you do not receive *GOMACO World,* and would like a complimentary subscription, please contact GOMACO Corporation, PO Box 151, Ida Grove, IA, 51445, USA, 712-364-3347 or e-mail bwonder@gomaco.com.

GOMACO Corporation's Quality Management System Is ISO 9001:2000 Certified By The American Systems Registrar.

Quality Policy: We Shall Meet Or Exceed Our Customers' Expectations.

GOMACO

President and CEO *Gary L. Godbersen*

Vice Presidents
Accounting *Sharon K. Godbersen*
Administration & Finance *Richard E. Smith*
Engineering/Research & Development *Kevin L. Klein*
Manufacturing *Grant Godbersen*
Worldwide Sales and Marketing *Kent Godbersen*

General Manager of Manufacturing *Dan Soellner*

Sales United States and Canada
Sales Manager *Bob Leonard*
Sales Coordinator *Brad Zobel*
Assistant Sales Coordinator *Mike Leinbaugh*

United States and Canada District Managers
Brad Barkema – N. Central
Jim Hayward – Western
Kendall Kelly – S.W.
Vinnie Miller – S.E.
Len Rettinger – N.E./Central

International Sales
Director *Bryan Schwartzkopf*
Coordinator *Randy Bean*

International Regional Manager
Tim Nash – Asia Pacific
Steve Bowman – Latin America

GOMACO International Ltd.
Managing Director *Rory Keogh*
Sales Managers *John Bowden & Andy Linham*

Service Department
Manager *Dennis Ernst*
Service Desk *DeWayne Krayenhagen & Doug Comstock*

Parts Manager *John Kallin*
Parts Desk *Dan Ellerbusch, Jeff Stevenson & Dean O'Tool*

GOMACO University Training Center
Director *Dennis Clausen*
Assistant Director *Rod Schneider*

***GOMACO World* is produced by the GOMACO Advertising Department.**
Manager *Randy Bach*
Marketing Coordinator *Micki Rettinger*
GOMACO World Editor *Kelly Krueger*
Communications Specialist *Thomas R. Grell*
Communications Specialist *Bobbi L. Wonder*
Advertising Coordinator *Carrie J. Odgaard*
Photo Lab *Don Poggensee*

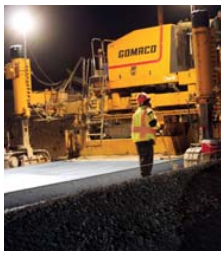

GOMACO Versatility Showcased on I-64 Project

One of the most unique projects in Missouri history is currently in its second phase on Interstate 64 through St. Louis. The design-build project, the city's first, is a complete replacement of approximately 10 miles (16 km) of the interstate right through the heart of the city. One-half of the 10 miles (16 km) is completely shut down to traffic while work takes place. The unprecedented move is taking years off the completion date and creating a safer environment for the construction workers.

The project is being built by a consortium called Gateway Contractors, which involves contractors Granite Construction; Fred Weber, Inc.; and Millstone Bangert, Inc. The two-year project involves 200,000 cubic yards (152,912 m^3) of concrete. All of the concrete will be slipformed by GOMACO equipment.

Fred Weber and Millstone Bangert have brought their fleet of GOMACO equipment onto the project. That fleet includes three 9500 trimmer/placers, an RTP-500 placer, four Commander III four-tracks, and a GHP-2800 paver. It's a lot of equipment, but the variety of applications the equipment is slipforming is astounding.

The Commander IIIs are slipforming shoulders, medians, variable-width ramps, inside median barrier wall, outside barrier wall, retaining wall, roundabouts, bridge parapet, truck lanes, half-shaped barrier wall against MSE (mechanically-stabilized earth) wall, and moment slabs for the sound wall. That's over 10 different applications that one machine is capable of slipforming.

"In my opinion, the Commander III is the best machine around and you can't beat it for versatility," Jim Jackson, Operations Manager of Paving for Fred Weber, said. "That machine will do anything you ask it to do. It's just amazing what it can do, as small as it is."

Paving the Mainline –

But let's start at the beginning of the project and the removal of the existing roadway. All of the material on the project was recycled. The concrete was crushed and used again for the base material. The base for the I-64 project consists of 10 inches (254 mm) of six inch (152 mm) minus rock, capped with two inches (51 mm) of Type 5 rock. The top layer is trimmed to the accurate, final grade with a GOMACO 9500 with an 18 foot wide (5.5 m) trimmerhead.

Millstone Bangert is responsible for all of the mainline paving on the project and are using their GOMACO four-track GHP-2800 paver. Project smoothness specifications require a reading of under 30 and Millstone Bangert is consistently running

Photos by Kelly Krueger CG-100819 D4

A *GOMACO 9500 feeds concrete onto the belt of a four-track Commander III slipforming barrier wall on a project in St. Louis.*

"In my opinion, the Commander III is the best machine around and you can't beat it for versatility," Jackson said. "That machine will do anything you ask it to do. It's just amazing what it can do, as small as it is."

between 10 and 12 on the zero-blanking band. Smoothness, according to Ron Dibler, Millstone Bangert's Paving Superintendent, begins with the base.

"Good ride is a process that begins from the ground up," Dibler said. "You have to have good string, consistent mix and try to keep the paver moving with minimum stops. Most important though, is a good solid trimmed base to pave on and run the paver's tracks."

Each paving pass with the GHP-2800 is nine or 10 inches (229 to 254 mm) thick and 25 feet (7.6 m) wide. They're building four new lanes of interstate, for both the eastbound and westbound sides. Paving production averages between 2500 to 3000 cubic yards (1911 to 2294 m^3) per day.

All of the concrete for the project is being supplied by two on-site batch plants. Concrete is delivered to the paving site by tandem-axle dump trucks. The concrete is a Missouri Department of Transportation (MDOT) approved mix with an average slump of 1.5 inches (38 mm).

All of the Wall –

Slipping the Outside Barrier Wall – The profiles for the inside and outside barrier walls are very similar, but the outside barrier has sound wall mounted to the top of it. A Commander III is used to slipform a moment slab with a rebar grid. The steel for the wall is tied to the rebar grid in the moment slab. With the steel in place, the spacing for the sound wall is meticulously plotted and the anchoring bolts for each post are carefully set.

"The sound wall posts have to be put in the exact location, because each panel is made to fit a certain area," Dibler said. "After the cages are built, we dry run the steel to make sure everything is going to work and it's all set to the right height."

The concrete trucks dump their loads into an RTP-500, which then feeds the belt on the Commander III. The central mix concrete, according to Dibler, gives their concrete more consistency and allows them to run a drier mix for their barrier work.

Behind the Commander III, workers have to locate the anchoring bolts for the sound wall, dig them out and expose them so the posts can be installed after the concrete has cured.

Center Median Barrier – A 9500 placer feeds another four-track Commander III as it slipforms the variable-height center median barrier. The height of the wall varies from four feet (1.2 m) to 7.25 feet (2.2 m).

FT-100801 D14

A *9500 trims grade for the mainline portion of the paving project. The trimmer is equipped with an 18 foot (5.5 m) wide trimmerhead.*

Retaining Wall –

Photo by Tom Held CG-040813 D1

Two rebars at a time are hydraulically inserted into the top of this barrier. Another wall will be slipformed on top to form a retaining wall on the project.

Photo by Tom Held CG-100843 D3

A *roundabout on the project was slipformed 20 feet (6.1 m) wide with integral curb around a 45 foot (13.7 m) radius.*

Non-variable Barrier –

CG-100820 D19

Ten longitudinal bars are fed into the front of the mold on the Commander III for the non-variable barrier wall.

CG-100822 D3

The Commander III is equipped with a variable-height mold for slipforming both the variable and non-variable center median barrier.

CG-100825 D13

The V2 mold is making on-the-go width changes from 15 feet (4.6 m) down to 12 feet (3.7 m), and 18 feet (5.5 m) down to 12 feet (3.7 m).

"We've been able to slipform variable pavement widths very easily, and that's been a big help on this project," Dibler said. "The new roller frame on the Commander III and the transition sensors go right through the width changes without a problem."

The non-variable height barrier has 10 longitudinal bars fed into the front of the mold for wall reinforcement. The variable-height barrier is slipformed over a steel cage in the lower half of the wall. They are inserting six longitudinal bars into the front of the mold for the top section of the wall.

Retaining Wall – The consortium engineered a cost-saving measure on the project by stacking two slipformed walls on top of each other instead of putting in MSE wall. The first retaining wall varies in height between three feet (0.9 m) and six feet (1.8 m). Two rebars are hydraulically inserted vertically into the 24 inch (610 mm) wide top of the wall and vibration is applied to the rebar during insertion. The wall is allowed to cure, and then backfilled. The roadway is brought up to grade, and then another section of wall is slipformed on top of the existing wall.

"The slipformed retaining wall replaces MSE walls shorter than nine feet (2.7 m) in areas that would retain dirt," Dibler explained. "Rather than building a costly MSE wall, we were able to slipform retaining walls."

Side-mounted Shoulder and Medians –

All of the shoulder and medians on the project are slipformed with a side-mounted mold on the Commander III. Medians are slipformed six feet (1.8 m) wide. Shoulders vary from four to 10 feet (1.2 to 3 m), or 8.5 feet (2.6 m) if there is a barrier wall on it. Zero-clearance paving against the MSE wall was accomplished after modifying their mold.

"We had an idea of moving the sideform cylinders and mounting structure from the outside of the mold to the inside of the mold and minimizing the thickness of the sideform," Dibler said. "We were able to get that down to about two inches (51 mm), which allows us to slipform closer to the walls, and that's been a big help on this job."

Variable-width ramps with the V2 mold –

Two of the Commander IIIs on the project are equipped with V2 variable-width molds. The V2s have the optional auto-width adjustment package to allow the mold to make on-the-go width changes and produce a tapered slab. A second stringline is set to follow the desired tapered slab, and sensors on the paver use that second stringline to control the cylinders that extend or retract the frame and side-shift the mold. The operator simply puts the system on automatic when approaching the width transition and the mold adjusts to the new paving

CG-100838 D13

The Commander III slipforms barrier next to a section of already finished sound wall.

CG-100833 D14

CG-100833 D8

CG-100836 D3

The first step to the sound wall is slipforming a moment slab. The slab features extra steel reinforcing slipformed into the concrete. The steel caging for the barrier wall is anchored to the steel in the slab. Extra supports for the sound wall are incorporated into the wall's steel cage. The posts that support and hold the sound wall panels are then bolted to the supports after the concrete wall has cured.

width automatically.

Width changes on the ramps include transitions from 15 feet (4.6 m) down to 12 feet (3.7 m) wide, and 18 feet (5.5 m) down to 12 feet (3.7 m) wide. The transitions are made on-the-go, with no need to stop and adjust the paver width.

"This is something I've been looking forward to for a long time," Jackson said. "We've always had to stop paving and add or take out a section, and that takes time. Then, when we first got our V2 mold, we had to set our stringline like normal and paint a line where we wanted our transition. A worker would stand there with the remote in hand and try to follow that line manually.

"Now with this new package and the extra cylinder and stroke, we can set our second stringline and the transitions follow the stringline. You don't have to worry about anything else. It gives us such flexibility and different options. It's just a very smooth transition."

It allows them to pave at different widths, with one machine, all in the same day. On a project like this, it's a necessity and a huge time savings.

"We've been able to slipform variable pavement widths very easily, and that's been a big help on this project," Dibler said. "The new roller frame on the Commander III and the transition sensors go right through the width changes without a problem."

Roundabouts –

Another cost-saving measure on the project included building two roundabouts instead of entrance and exit ramps. The 20 foot (6.1 m) wide, eight inch (203 mm) thick roundabouts, with integral curb on one side, had to be built around a 45 foot (13.7 m) radius. Fred Weber decided to pave the first roundabout in two separate pours. The first was 10 feet (3 m) wide and the second was the same width with a three inch (76 mm) mountable curb.

"The tight radius intimidated us a bit on the first roundabout," Jackson said. "The second one though, we decided to pour the full 20 foot (6.1 m) with the curb on it. It worked out just fine, and we accomplished it all in one pour, instead of two."

To finish out the roundabout, a lane was slipformed inside of its radius. The lane, which is used to assist trucks through the roundabout, was nine inches (229 mm) thick, and 10 feet (3 m) wide with a six inch (152 mm) vertical curb.

The I-64 project is scheduled to have traffic back on the finished second phase by the end of this year. It's a deadline the consortium is confident they'll make.

Photos by Ric Moser HW-090816 D18

The GP-2600 with a front-mounted chain trimmer slipformed a new canal between Amasya and Tasova in northern Turkey.

Slipforming Canal in Northern Turkey

Water has always been a precious commodity in the Amasya Province of northern Turkey. A famous canal, the Ferhat Water Canal, was first carved into the mountains during the late Hellenistic Age and early Roman Period, approximately 2000 years ago. It was constructed using the water balance system by opening tunnels on the carved rocks and forming vaulted walls using the natural slope of the land to make the water flow to the ancient city of Amasya.

Water is still a precious commodity in northern Turkey and the modern city of Amasya. The city is home to over 350,000 people. The entire province of Amasya is very agricultural and is famous for its apple crops. They also produce tobacco, peaches, cherries and okra.

A more modern method of building canals is currently underway near the city. Basat Elektrik Uretim & Tic. Ltd. Sti., based out of Istanbul, Turkey, is using a GOMACO GP-2600 paver to slipform three kilometers (1.9 miles) of new canal between the cities of Amasya and Tasova.

The new canal has a top width of 22.3 meters (73.2 ft), bottom width of 6.7 meters (22 ft), and 9.3 meter (30.5 ft) side slopes that are 150 millimeters (5.9 in) thick. The GP-2600 has the capabilities of paving canal profiles between six to 9.9 meters (19.7 to 32.5 ft) wide.

At the start of the project, over 2.5 million cubic meters (88,286,188 ft^3) of material had to be

HW-090817 D17

The GP-2600 paved each of the canal slopes are 9.3 meters (30.5 ft) wide.

HW-090818 D3

Concrete was discharged into the concrete feeding system with an auger and baffles that fed it down the slope of the canal.

excavated to build the new canal. A fleet of crawler dozers and excavators worked on the project getting the canal to the proper profile.

The GP-2600 was equipped with a chain trimmer to trim down any high spots in the crushed-gravel grade. The trimmer is capable of trimming up to 50 millimeters (2 in) of fine grade material.

Concrete for the canal was produced at an on-site mobile batch plant. Ready-mix trucks delivered the concrete to the paver. Slump averaged 50 millimeters (2 in).

The ready-mix trucks discharged into a concrete distribution system mounted to the front of the paver. The distribution system is an auger system with baffles that run along the slope of the canal. An auger moves the concrete down the slope, while the baffles collect the concrete to keep it from sliding down to the bottom of the 1.5:1 slope of the canal wall.

Behind the paver, a transverse joint cutter and two longitudinal disk wheel cutters cut the joints. Each is spaced three meters (10 ft) apart and the joint, itself. is 10 millimeters (0.4 in) wide. Finishers stood on a work bridge mounted to the back of the paver and applied a trowel finish to the surface of the canal and around the joints. Paving production averaged around 170 cubic meters (222 yd^3) per hour.

Basat Elektrik's portion of this canal is nearly finished. They plan on keeping their GP-2600 paver busy in the future on more canal work on 28 different hydroelectric projects. The work will be carried out over the next five years throughout the country of Turkey.

HW-090818 D15

The chain trimmer on the GP-2600 is capable of trimming up to 51 millimeters (2 in) of fine grade material in the canal.

Photos by Kelly Krueger. CG-100732 D11

DOUBLE VARIABLE BARRIER WALL ON ILLINOIS' I-55

P.T. Ferro Construction Company first started work in 1964 as utility contractors in Joliet, Illinois. Since that time, they've taken on a variety of challenges as they expanded their business. They added a GOMACO GT-3600 curb and gutter machine in 2004 and started slipforming their own curb on their projects.

The Illinois Department of Transportation (IDOT) let a barrier wall project on Interstate 55, just west of their Joliet location. They had never slipformed barrier wall before, but weren't afraid of the challenge. They consulted with their GOMACO distributor, Finkbiner Equipment Company, and with GOMACO engineers to find the right machine and mold profile to complete the 22,000 lineal feet (6706 m) of variable height, center median barrier.

They purchased a Commander III with a four-track barrier package assembly. The mold was built with double variable capabilities so each side of the wall could be adjusted up to 30 inches (762 mm) to meet project specifications in a single slipforming pass.

Choosing the right machine was an important decision in the project's early phase. P.T. Ferro was working under a tight deadline for completing a portion of the work before winter weather moved in.

"This job had an interim completion date that included a penalty," Phil Hess, President of P.T. Ferro, said. "We were under the gun to buy a machine, and get 2500 feet (762 m) of barrier wall slipformed before winter set in."

Their new Commander III was delivered on time on October 22. The project completion's date for the year was November 15. The completion date included not only finishing the barrier wall, but also the entire project of adding a new lane and opening up that section of interstate to traffic again.

"Once the Commander III arrived, we only needed a couple of days of training," Eric Zola, General Superintendent for P.T. Ferro, said. "The operating systems on the GT-3600 and the Commander III are

very similar, so it was easy for our people to learn. Because of the background we already had and the ease of using the GOMACO equipment, I'd say we were up to maximum production within a couple of days."

On the first day of their barrier pour, IDOT had a review team on site to witness the slipforming.

"They were impressed with the quality of our wall and our total production," Zola explained. "And it was just our first day. It only got better from there on out."

The barrier's profile featured a 39.25 inch (997 mm) wide base, and a 19 inch (483 mm) wide top, with both of the side walls varying in height from 3.5 to 6.5 feet (1.1 to 2 m). Every 14 feet (4.3 m) of wall required a new mixer truck, carrying a 10 cubic yard (7.6 m^3) load of concrete.

"In a normal work day, we always exceeded our estimated production rates," Zola said. "We were emptying concrete trucks every 14 minutes... that's a lot of concrete. Our concrete supplier, Welsch Ready-Mix, did an excellent job for us.

"The key was getting the concrete to the site at the right slump, having the vibrators set correctly and then just having great personnel out there."

The concrete mix design was an IDOT approved mix with slump averaging between 0.5 to 0.75 inch (13 to 19 mm). P.T. Ferro used nine straight vibrators placed at strategic locations in their barrier mold. They also equipped their Commander III with a 24 inch (610 mm) long conveyor extension. Zola felt the extension made it easier to get concrete from the trucks into the mold to aid their overall production rate.

Finishing work was kept to a minimum with only a light broom finish applied behind the Commander III.

P.T. Ferro finished their first portion of interstate within the time allowed. They went back and completed the second portion of the project and impressed everyone at IDOT with their slipformed barrier.

"It was a massive wall within a restricted area, but it worked well for us," Hess said. "From Marty Ahrendt at Finkbiner Equipment to GOMACO... everybody was just top notch.

"The key, besides the equipment and the people, is good concrete... The concrete is crucial. Because of this experience, we're looking forward to doing more wall work with our Commander III in the near future."

CG-100728 D28

P.T. Ferro's barrier mold is built with double variable capabilities so each side of the wall can be adjusted for height.

CG-100732 D15

Slipforming successful wall, according to P.T. Ferro, is having the right concrete mix design delivered at the correct slump.

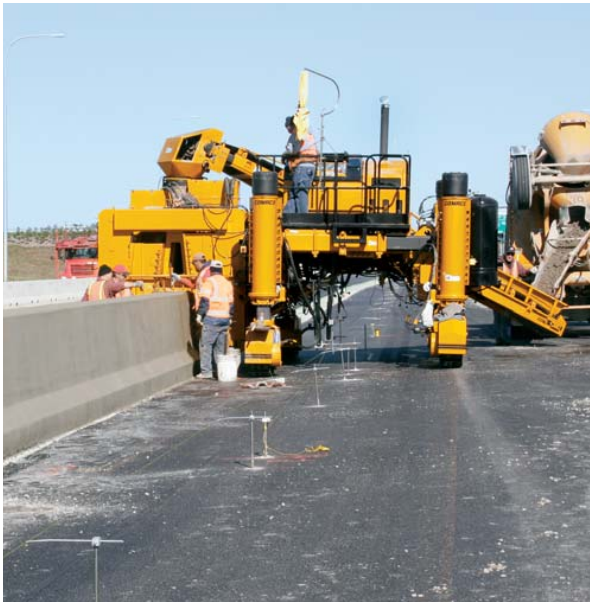

CG-100723 D5

Stringline is set underneath the Commander III and out of the way of the finishers.

CG-100732 D13

The wall has a 19 inch (483 mm) wide top, is 39.25 inches (997 mm) wide at the base and its sidewalls vary in height from 3.5 to 6.5 feet (1.1 to 2 m).

Paving 99 Lane Miles (159 km) and Counting Without a Single Grind

Photo by Dale Danielson HW-090702 D5

The first 72 lane miles (116 km) of Scruggs' work on I-75 in Georgia was slipformed using stringline. They achieved excellent rideability.

The Cook County I-75 widening project is a $126 million project between Adel and Lenox, Georgia. It's part of the state's Fast Forward Program, a $15.5 billion initiative to expedite transportation projects. Part of that initiative includes widening I-75 from four to six lanes throughout parts of Georgia.

The Scruggs Company of Valdosta, Georgia, has their GOMACO paving train at work on the project, and they have been achieving good rideability, which means absolutely no grinding on 99 lane miles (159 km). And the project isn't even complete yet. The company still has 27 more lane miles (43.5 km) to pave and they plan on having zero grinding on that section as well.

HW-040807 D7

During the project, Scruggs switched to a stringless system and are still achieving excellent ride numbers.

"We're dealing with a seven inch per mile (110 mm/km) maximum on the one-tenth blanking band," John Romaine, Concrete Division Manager for Scruggs, said. "Our average results are in the 1.5 inch (24 mm) range and that includes all the concrete paving on the project, even the short run, leave-out sections. If you take just our mainline runs, we're under one inch per mile (16 mm/km)."

Scruggs used the Leica stringless guidance system on their PS-2600 placer/spreader and four-track GHP-2800 while paving the last 27 lane miles (43.5 km). They've used the stringless system on grading and site prep equipment, but this was the company's first time using it to pave.

"Alignment of the PS-2600 is critical for us," Romaine said. "This is a continually-reinforced concrete (CRC) project and we have only two inches (51 mm) of clearance from the outer edge of the transverse bar assemblies to the inside of the sideforms. It is critical to maintain alignment horizontally and it worked well."

The concrete is a Georgia Class 1 mix with a size 57 stone and natural sand. Slump averages between 1.25 to 1.75 inches (32 to 44 mm). It is mixed at an on-site batch plant and delivered by dump trucks carrying nine cubic yard (6.9 m^3) loads.

HW-040812 D14

Scruggs PS-2600 placer/spreader and GHP-2800 paver are guided by the Leica stringless system. The GSI and T/C ran on stringline.

"We're dealing with a seven inch per mile (110 mm/km) maxin
blanking band," Romaine said. "Our average results are in the
and that includes all the concrete paving on the project, even
sections. If you take just our mainline runs, we're under one inc

HW-040815 D18

Rideability specifications were easily met with the four-track GHP-2800 paver. Scruggs has paved 99 lane miles (159 km) on the project with

HW-040813 D12

A *GSI followed the paver providing instant rideability readings.*

HW-040816 D1

A *T/C-600 texture/cure applied a tine finish and white spray cure.*

num on the one-tenth
1.5 inch (24 mm) range
the short run, leave-out
ch per mile (16 mm/km)."

out a single grind.

The new Portland cement concrete pavement is being slipformed by a GOMACO GHP-2800 four-track slipform paver. Each paving pass is 25 feet (7.6 m) wide, 12 inches (305 mm) thick. A side-mounted bar inserter shoots #5 bars, 24 inches (610 mm) long, into the side of the slab at 18 inch (457 mm) intervals.

"We like our GHP-2800 four-track," Romaine said. "It gives us flexibility to tackle different types of projects, gives us a good ride, and allows us to pave more accurately."

A four-track Commander III is slipforming a 12 foot (3.7 m) wide add-on lane on the project. It is also equipped to pave stringless.

When Scruggs first started using the stringless system, they went through a series of on-site tests with personnel from GOMACO and Leica. Stringline was also set so a GOMACO Smoothness Indicator® (GSI) could run behind the paver and provide real-time ride information during the testing.

"It was important to me to have a GSI as part of the paving train during testing," Romaine said. "It obviously provided some excellent feedback, instantly, so we could make any necessary adjustments.

"We were able to run the 3D model of the project through the GSI software so we could predetermine the best possible ride we could achieve. We discovered, because of the profile grades of the roadway and other factors, the best we could achieve on the IRI would be around a 40. It's interesting to be able to determine the best ride number you can possibly achieve, no matter what smoothness index you're using."

The optional GSITools™ software gives contractors the ability to build a profile of the project to view various indexes and also estimated concrete yield before paving begins.

A GOMACO T/C-600 texture/cure machine follows behind the paver applying a 0.375 inch (9 mm) center-to-center horizontal tine and a white spray cure. Sonic sensors, steering off the side of the slab, guide the texture/cure machine.

"I think the future for the stringless system is bright and we're looking forward to learning more about the system's true capabilities," Romaine said. "We've gone Leica from bottom to top. We're building subgrade, base, and now concrete."

Scruggs' work on the I-75 project is scheduled for completion by mid-summer 2010. They'll spend this summer paving the northbound side of the project, an additional 27 lane miles (43.5 km), with their GOMACO paving train.

"GOMACO is the best in the business, as far as I'm concerned," Romaine said. "We get great service out of all the individuals at GOMACO, from their parts people to their engineers to their salesmen. We also get great performance from their equipment. The ease of setup and change-over for different paving widths saves us a lot of time and money."

The Scruggs Company took part in a voluntary trial using the zero-blanking band to test their CRC pavement smoothness, and the ride produced with their GHP-2800 with Leica stringless system. As part of the test, Scruggs profilographed four miles (6.4 km) of the new I-75 project. Their results were excellent. The overall PI averaged only 16.20, with numbers as low as 10.4.

A High-Speed Connection Between France and Spain

It's a project of enormous size and expense, but it will ultimately link two countries via a high-speed rail link. Both tourists and freight will travel at speeds up to 300 km/h (186 mph) as they ride between Perpignan, France, and Barcelona, Spain. The journey used to take almost three hours to complete, but that time will be reduced to only 50 minutes with the new Train à Grande Vitesse (TGV).

CG-120823 D18

"Le Perthus" tunnel is the link between Perpignan in France and Figueras in Spain in the French/Spanish border town of Perthus. Two 8.7 meter (28.5 ft) diameter tunnels, each 8.4 kilometers (5.2 miles) long, is part of the overall link connecting the two countries.

The work on the French side of the railway was completed by the contractor group, EIFFAGE Travaux Publics, France, based out of Lyon, France. Part of their responsibilities included slipforming the concrete base slab on which the railway for the high-speed track would be laid, and the two side platforms.

This would be the first tunnel project for the company. They turned to GOMACO and Metalliance, their GOMACO distributor in France, for guidance. They needed to slipform five different profiles inside the tunnel's limited space. EIFFAGE chose to purchase three GOMACO Commander IIIs with the various mold profiles.

"We've been using Commander IIIs since 1996 and GOMACO's experience working in tunnels was very important in our final equipment choice," Fréderic Gratessolle, manager of the Large Project Concreting Pavement Division, said. "The other reason was the relationship between EIFFAGE and METALLIANCE. For this project to be a success, we knew we needed good partners."

EIFFAGE's first project inside the tunnels was slipforming the base slab, or tunnel floor. The floor had an average thickness of 600 millimeters (23.6 in) and was 5.6 meters (18.4 ft) wide. Cross slope of the floor varied between zero and 7.67 percent. Three

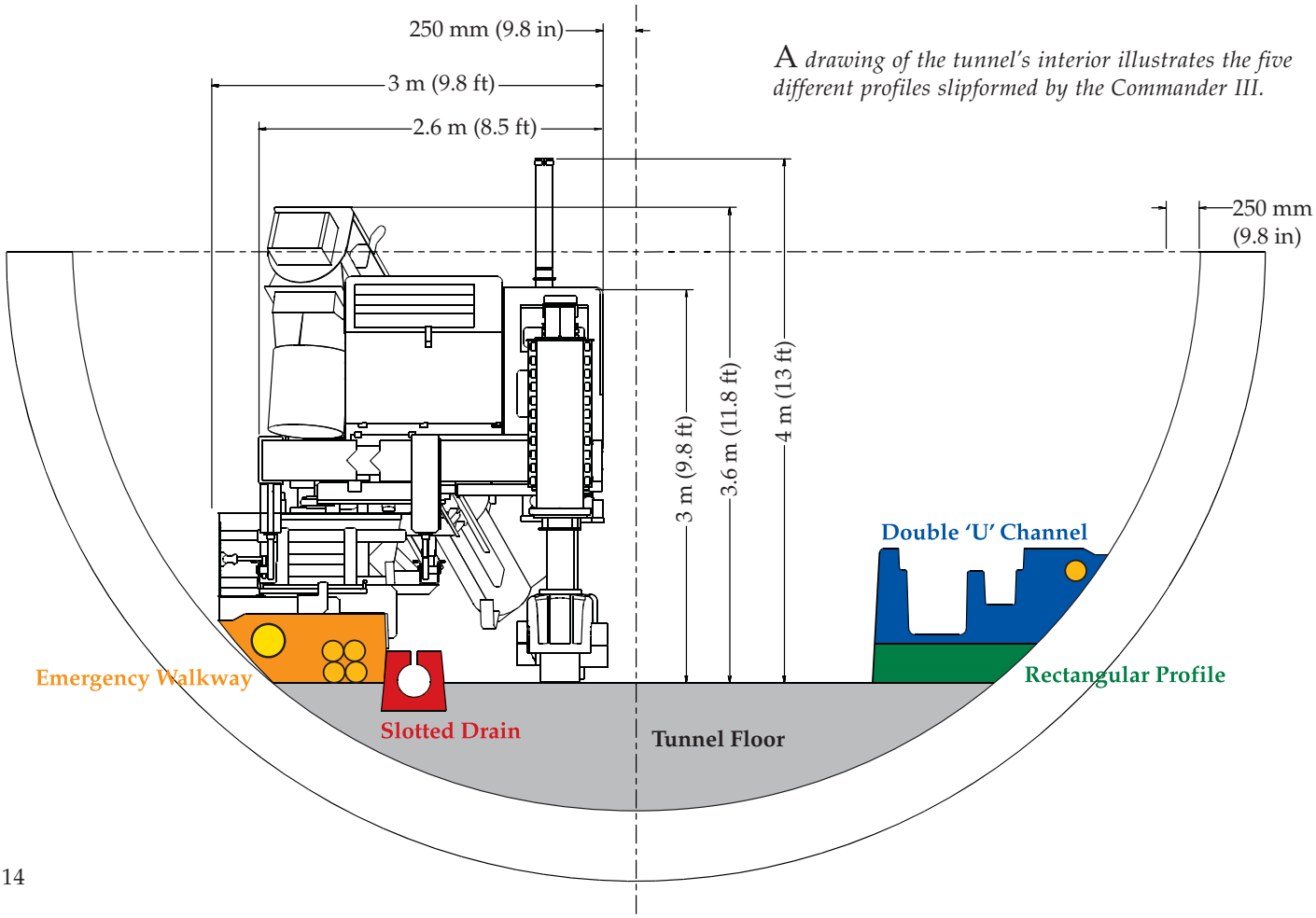

A drawing of the tunnel's interior illustrates the five different profiles slipformed by the Commander III.

different drainage pipes, varying in diameter from 250 to 400 millimeters (9.8 to 15.75 in), were incorporated into the floor during slipforming.

The Commander III four-track had its tracks turned at 35 degree angles to run along the slope of the tunnel walls. The inner leg tubes were turned 45 degrees from their normal position to accommodate the tunnel paving application.

Concrete was supplied by an on-site batch plant on the Spanish side of the tunnel. Ten specially-designed mixer trucks carried six cubic meter (7.8 yd^3) loads of concrete to the paving site. Two special crossing platforms were fabricated inside of the tunnel to allow the trucks to pass by each other. A turntable in front of the paver swiveled the trucks 180 degrees so they could dump into the hopper of a custom-built concrete spreading system.

"I think the most difficult aspect wasn't the slipforming, but delivering the concrete with trucks inside the tunnel," Luc Riottot, Perthus Tunnel job-site manager, said. "When we paved the floor, we paved from France towards Spain in both tunnels. The system allowed the trucks to pass each each other, turn around, and return concrete batching plant."

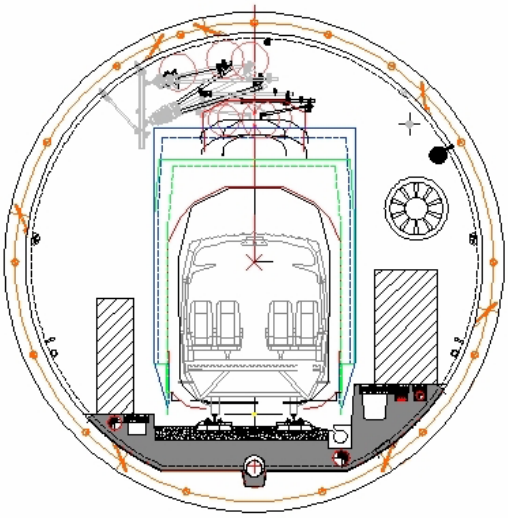

The finished drawing of the tunnels with high-speed train connecting France and Spain.

The Commander III was equipped with the Leica stringless guidance system and the Minnich Auto Vibe vibrator monitoring system. It also features the latest in GOMACO control systems, the G22, which has easy to understand icons and commands in full text French (or any other language of the contractor's choice). The G22 easily interfaces with both the stringless guidance and vibrator monitoring systems.

EIFFAGE worked continuously, 24 hours a day, seven days a week, slipforming the tunnel floor. In eleven weeks time, they finished the floors in both tunnels, slipforming 48,000 cubic meters (62,781 yd^3) of concrete.

With the floor complete, it was time to bring in their three-track Commander IIIs. Each was equipped with a high-drive track on the front leg for tight-clearance paving. The narrow track could run between the tubes and piping that had to be slipformed into the side profiles.

The first of the side profiles to be slipformed was a slotted drain with a 250 millimeter (9.8 in) diameter. The profile is designed to drain away any dangerous liquids that could potentially spill from the goods transport trains. The slotted drain was slipformed the length of one tunnel. Then the Commander III would be moved to the adjoining tunnel and slipform the drain back in the opposite direction.

Next to the drain, a rectangular profile was slipformed over a 250 millimeter (9.8 in) diameter drainage pipe and four 160 millimeter (6.3 in) diameter tubes for electrical cables. The profile was 495 millimeters

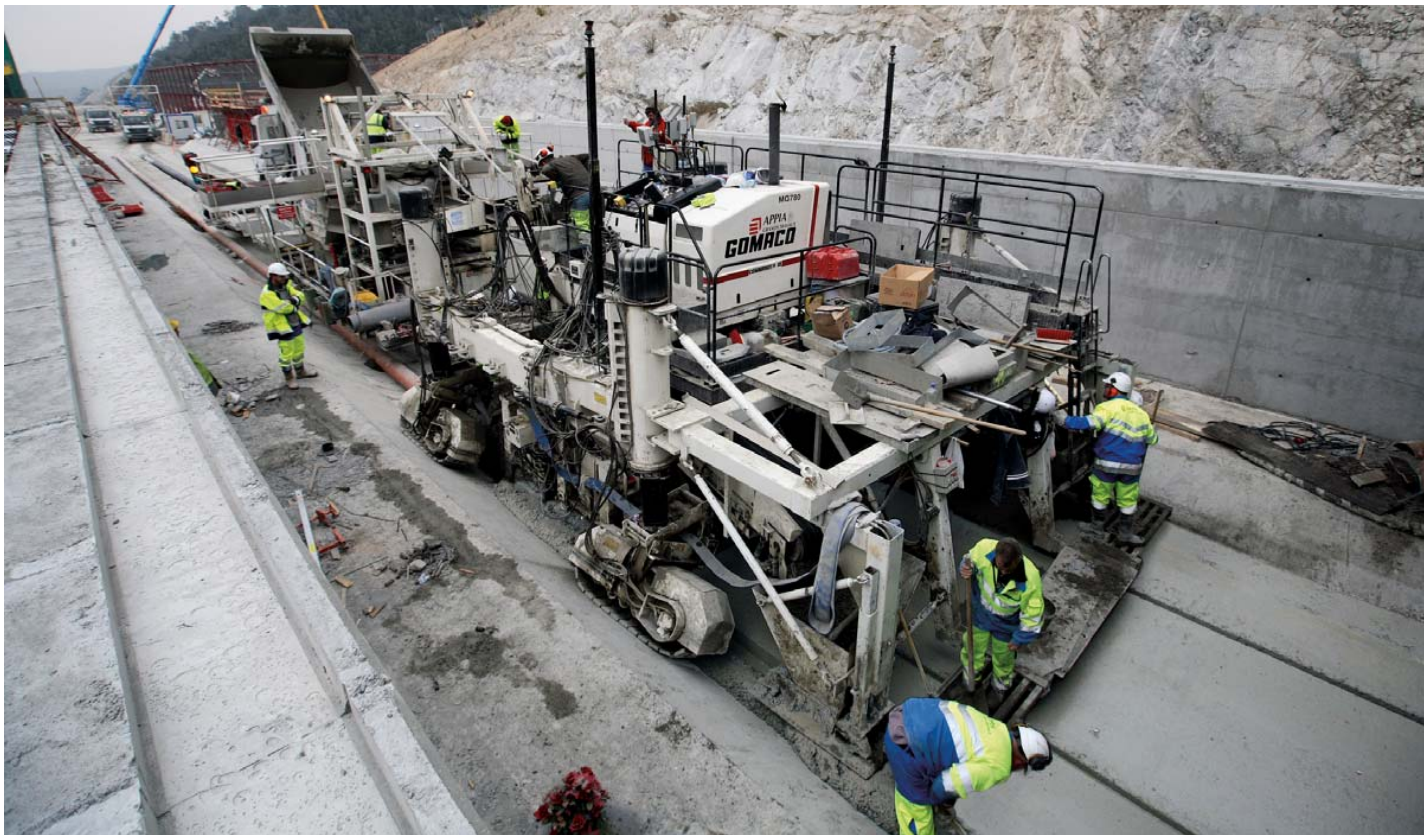

Photos courtesy of John Denton, METALLIANCE CG-120818 D7

The tracks on the Commander III were turned at 35 degree angles to run along the slope of the tunnel's walls.

thick (19.5 in) and 1.47 meters (4.8 ft) at its widest point.

With both profiles complete, it was time to begin work on the profiles for the opposite sidewall.

"We used two passes and two molds, because the complete profile was more than one cubic meter (1.3 yd^3) of concrete and we thought that was too much to slipform in one pass," Gratessolle said. "The first layer was a rectangular profile. On top of that, we slipformed a double 'U' channel profile. The channels will hold pressure water pipe for fire protection and a tube inside the concrete will house more electrical cables."

The surface of the profile will also serve as a passenger walkway in case of emergency exits.

Trucks carrying concrete for the profiles would enter the tunnels from France, drive up on a ramp so they could get by the paver, unload onto the Commander III's high-volume auger conveyor, and then exit the tunnel towards Spain.

"One of the difficulties of the project was the difference between the theoretical position of the tunnel and its real position," Riottot said. "Sometimes we would have to manage up to 250 millimeter (9.8 in) differences. To resolve the issue, we used telescoping molds."

By the time "Le Perthus" tunnel project was completed, EIFFAGE had slipformed 28,000 cubic meters (36,622 yd^3) of concrete and five different profiles, each with a length of 16.8 kilometers (10.4 mi), for a grand total of 84 kilometers (52.2 mi). All of it was slipformed with GOMACO Commander IIIs and the Leica stringless guidance system.

"The Commander III is a versatile machine and with all of the different profiles we needed to pave, it was the key to the project," Eric Bon, Technical Manager of the Division of Concrete Pavement, said. "Preparation is the most important thing for this kind of project and to win the challenge, you need partners who will stay with you from beginning to end. We had those partners in GOMACO and METALLIANCE."

CG-120819 D19

A *turntable allowed trucks to rotate 180 degrees to dump their load of concrete into the hopper in front of the Commander III.*

CG-120827 D5

A *high-drive track worked in the narrow spaces between the tubes and piping to be slipformed into the various profiles.*

CG-120827 D9

Slotted *drain will remove any dangerous liquids that could potentially spill from the trains.*

CG-120821 D14

The Commander III four-track was lifted by crane into the tunnel at the beginning of each of the two tunnels.

CG-120820 D18

The tunnel floor was 5.6 meters (18.4 ft) wide and has an average thickness of 600 millimeters (23.6 in).

CG-120827 D13

The Leica guidance system eliminated the hassle of stringline in the tunnel's tight paving conditions.

CG-120827 D14

Trucks carrying concrete entered the tunnel from France, drove up and over the ramp, unloaded, and exited towards Spain.

CG-120827 D19

The double 'U' channel was designed to hold water pipes for fire protection and also house electrical cables.

Commander III Power on a Mono Project in Arizona

Photos by Jim Dimig CG-090608 D7

Petra Contracting slipformed two different profiles of monolithic sidewalk and curb and gutter at a business park in Arizona.

KCR Inc., doing business as Petra Contracting, in Buckeye, Arizona, has a current inventory of five GOMACO Commander IIIs. The company specializes in commercial and residential curb and gutter work. Another company speciality is monolithic sidewalk and curb and gutter. They've even worked together with local cities developing specific monolithic profiles for their needs. Petra Contracting has made themselves very competitive in their market area by putting the customer first and developing profiles for their specific needs. Their Commander IIIs also add to their competitiveness.

"Our Commander IIIs do a great job," Keith Riefkohl, President of Petra Contracting, said. "It's the best curb machine on the market by a long shot."

Three of their Commander IIIs were recently at work on a new development project in Goodyear, Arizona. The project is the development of the Palm Valley 303 Master Planned Residential Community and Business Park. It will be constructed over the next 26 years as a 1600 acre (647 ha), 19.6 million square foot (1,820,840 m^2) master planned business park. It will feature areas for offices, retail, light industrial and warehouse and distribution along Interstate 10 and Loop 303 in Goodyear.

The monolithic trimmerhead on Petra's Commander III trims the grade to the sidewalk and curb and gutter's profile.

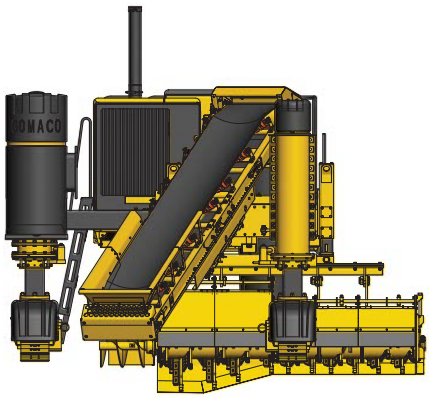

Petra Contracting was responsible for slipforming 160,000 lineal feet (48,768 m) of curb and gutter and monolithic sidewalk and curb and gutter on the project.

"We set up one Commander III for the 36 inch (914 mm) roll curb with five foot (1.5 m) sidewalk," Riefkohl explained. "Then, there was the 24 inch (610 mm) roll curb with five foot (1.5 m) sidewalk on the second machine. The sidewalk for both profiles is four inches (102 mm) thick. The third was our curb and gutter machine slipping a six inch (152 mm) vertical curb with 24 inch (610 mm) gutter. We had the three machines with three crews on the project. That way we were always ready to pour, and didn't have to worry about switching molds out and reconfiguring machines."

All three of the applications are trimmed and poured simultaneously. They use a blade to get the grade close to the profile. The Commander IIIs

feature not only the monolithic mold, but also a monolithic trimmerhead trimming the profile for both the curb and gutter and sidewalk. Petra trims an extra six inches (152 mm) wider than the application, and the trimmer unit's side-discharge feature moves the trimmed material out of the way.

"We don't pretrim with the machines unless we're in really rocky ground," Riefkohl said. "The last three Commander IIIs were bought with the CAT engine with 225 hp (167.9 kW), and we can literally trim through three inches (76 mm) without any problem. It trims really well and has a lot of power."

Two different concrete suppliers were needed on the project to keep all of the Commander IIIs supplied with concrete. The concrete was a MAG AA 4000 psi (27.6 MPa) curb mix with a 2.5 inch (64 mm) slump.

Finishing work behind the machines consisted of cutting in joints every 10 feet (3 m) with expansion joints every 50 feet (15.2 m). The new profile was given a light broom finish and sprayed with white curing compound.

Production on the project varied, depending on the length of the day's run, number of cul-de-sacs, and concrete delivery. Curb and gutter production averaged 4000 feet (1219 m) per day. The monolithic sidewalk and curb and gutter would average around 2000 feet (610 m) per day. On some of their better days, with long runs and good concrete supply, their average would jump to over 6000 feet (1829 m) in a 10 hour shift.

"The Commander IIIs work great and do an impressive job," Riefkohl said. "They have a lot of power for the work we need them to do and the needed horsepower to trim the monolithic profile. We could get by with less, but it's nice to have that extra horsepower."

CG-090611 D6

The Commander III's monolithic trimmerhead trims an extra six inches (152 mm) wider than the profile and moves the trimmed material out of the way with the side-discharge feature.

CG-090608 D15

A total of 160,000 lineal feet (48,768 m) of curb and gutter and monolithic sidewalk and curb and gutter was slipformed on the project. All of the concrete was done with Commander IIIs.

CG-090608 D20

Production, on good days, would average around 6000 feet (1829 m) of monolithic in a 10 hour shift if the concrete supply was good and steady.

GOMACO Introduces the New IDBI Attachment

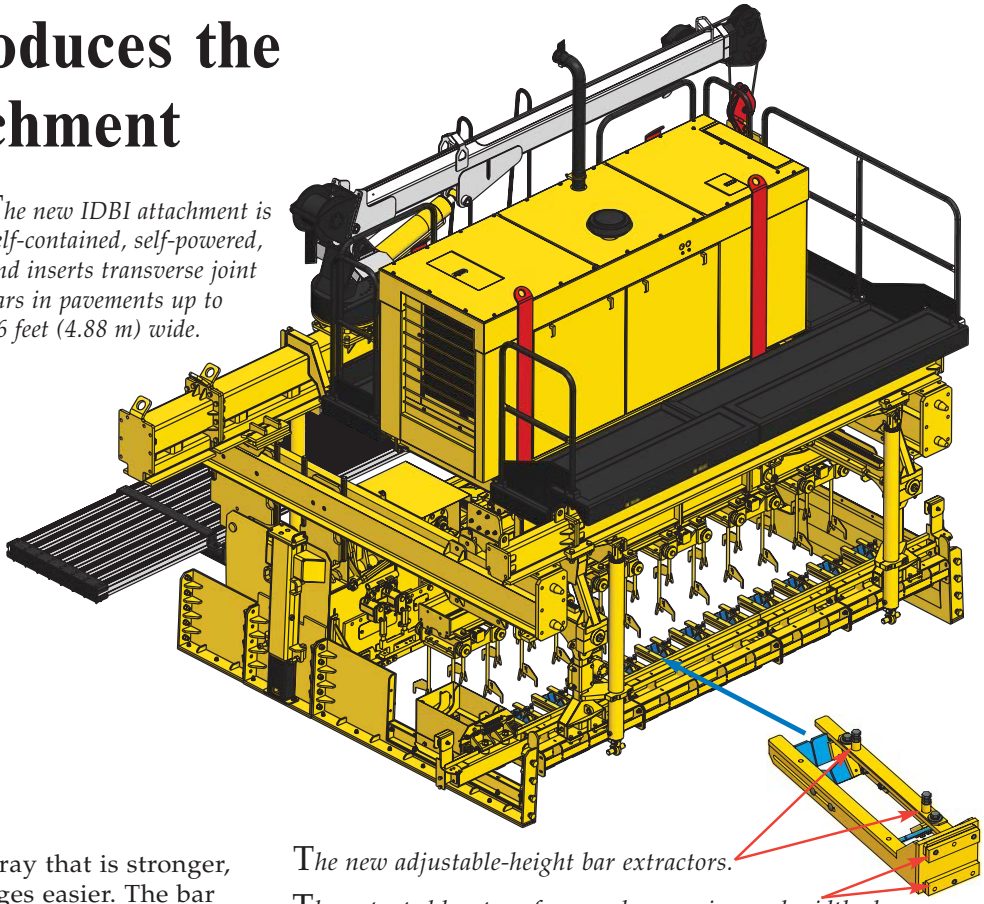

The new IDBI attachment is self-contained, self-powered, and inserts transverse joint bars in pavements up to 16 feet (4.88 m) wide.

The new adjustable-height bar extractors.

The patented bar tray for easy bar spacing and width changes.

The new IDBI attachment is an independent unit providing dowel bar insertion behind a paver. The attachment is powered by its own C4.4, Tier 3, diesel Caterpillar® engine with 91 hp (68 kW) @ 2300 rpm. No power or hydraulics is needed from the paver's engine. A CAN cable connects the IDBI's controls to the controller on the paver and allows the two systems to communicate. For example, when the paver stops and starts, the tamper bar and screed on the IDBI turn on and off automatically in coordination with the paver. GOMACO engineers have designed a bar insertion concept and created an independent attachment that is self-contained and self-powered. The new design features a new IDBI tray that is stronger, more compact and makes width changes easier. The bar loading tray now has adjustable-height bar extractors that allow contractors to quickly and easily change the setup for different bar sizes for insertion requirements.

The IDBI controls have all been designed in-house by GOMACO controls engineers. Its new GOMACO G+ control system features the same graphical display as the G22 controller, with easy to learn and easy to understand controls. The IDBI information is presented in full color, commands are presented in full text, and is able to operate in two languages, by customer's choice. It offers the choice of metric or imperial measurements. The new IDBI control system also offers troubleshooting capabilities and other features that will make start up and general paving each day faster and easier.

The new independent IDBI attachment features its own outriggers to aid in attaching the unit to the paver and also for loading and unloading the unit for transporting. The hydraulic outriggers can be lowered and placed on the ground to support the full weight of the IDBI as it is attached to or detached from the paver. The outriggers on the attachment have 48 inches (1219 mm) of stroke and are also used to raise the unit so a trailer can be backed underneath for transport.

SH-010916 D12

Outriggers on the attachment can be used to raise the unit so a trailer can be backed underneath for transport.

CG-030914 D8

The new IDBI tray is stronger, more compact, and is designed to make width changes easier.

GOMACO has taken the Commander III four-track to the next level in concrete slipform paving. The Commander III, the same machine chosen by contractors around the world for lane additions, shoulders and variable-width paving with the V2 mold, now offers the new IDBI attachment for dowel bar insertion. The Commander III four-track with IDBI attachment can insert transverse joint dowel bars in pavements up to 16 feet (4.88 m) wide.

The four-track Commander III paver with IDBI attachment features the new piston-style legs which utilize a round inner tube and a keyway for steering control. The new legs have more steering torque for tighter turning capabilities and job-site maneuverability. The other major change is the hydraulically telescoping leg pivots on the rear of the paver. The pivots have 28 inches (711 mm) of telescoping ability to allow the machine to achieve sufficient length to mount the IDBI to the paver. It also allows the legs to be retracted to meet shipping requirements or to pave without the IDBI. The pivot feature allows maximum versatility in track placement to meet job-site requirements. The Commander III four-track still has a shipping width of only 8.5 feet (2.59 m).

The IDBI attachment is also available for other GOMACO pavers. For more information, please visit: http://www.gomaco.com

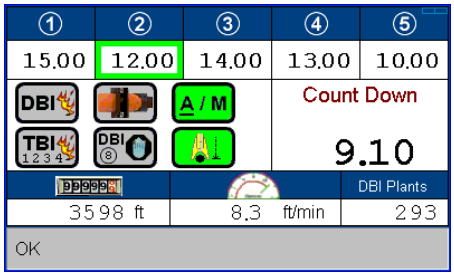

The new IDBI control system offers troubleshooting capabilities and features that make general paving easier.

The IDBI attachment is powered by its own C4.4, Tier 3, diesel Caterpillar engine with 91 horsepower (68 kW) @ 2300 rpm.

The Commander III four-track with IDBI attachment slipforms a new lane for a roadway project in Fresno, California.

GT-3600 Now Available with the G22 Operating System

The GT-3600 is now available with the optional G22, GOMACO's new exclusive operating system. The exclusive G22 combines intelligence with simplicity. The G22's new graphical display provides the operator with an easy to understand interface to the machine's controls. Newly designed icons and screens with pictograms reduce the operator's learning curve to a minimum. The brightly colored graphics and full text explanations provide the ultimate user-friendly operator experience.

The G22 has a dual-language feature with the ability to operate in English or a second language. It also offers the choice of metric or imperial measurements. The GOMACO control systems team has developed the G22 screens for the major languages of the world.

Advanced system diagnostics on the G22 automatically pinpoint and identify electrical circuit opens, shorts and fault codes to aide in troubleshooting. Faults are identified and a full explanation of recommended actions are given. That means less downtime and a quicker uptime on service because the G22 actually helps eliminate costly service time searching for system problems.

Leg size on the new generation GT-3600 was increased by 15 percent and features the same quality and durability as the GOMACO Commander III legs. An option for the standard trimmerhead is a radial piston hydraulic motor that makes this trimmer one of the most powerful on the market today. The motor provides an increase in torque for more power and a faster tooth-tip rotational speed which moves the material out of the trimmerhead at a higher rate. The new lightweight, molded fiberglass shroud allows easy removal or access to the engine components.

The control system also has a selective steering dial for five different modes of controlling the three tracks. This provides a choice for negotiating job-site conditions and loading for transport. The Crab Steering selection gives a quick approach and coordination to the stringline. The GT-3600 can easily reverse steer on-line to within 0.125 inch (3 mm) tolerance for a quick start. High-production performance through radii is accomplished with the control system's tight radius software and the ability to toggle steering control from the lead sensor, eliminating continued manual sensor adjustments.

Control circuits on the GT-3600 are electronic-over-hydraulic for easy, accurate adjustments and an instant, controlled response. Smart hydraulic steering cylinders, interfaced with the G22, allow push-button steering setup. The programmable cylinders also allow steering parameters of the tracks to be set with the touch of a button. Optional auto-transition and slope compensation software is available to automatically transition in and out of "catch" or "spill" gutter. It automatically compensates for mold position in relationship to the stringline as a result of slope change.

CV-040907 D19

The G22 display on the GT-3600 at Intermat 2009 in Paris, France.

CV-040907 D12

GT-3200 Adds Safety Barrier to its List of Slipform Applications

GOMACO's new GT-3200 curb and gutter slipform paver, with right-side and left-side pour capabilities, is now even more versatile. It can be used to slipform safety barrier up to 40 inches (1 m) tall. New features on the GT-3200 allow its barrier capabilities.

The new generation GT-3200, with front-steer capability, features the newly-designed piston-style front leg that utilizes a round inner tube and a keyway for steering control. The new front leg, with steering cylinder, provides more steering torque for tighter turning capabilities and maneuverability around the job site. The GT-3200's rear legs were engineered to be three times stronger than before and are now capable of handling barrier molds up to 40 inches (1 m) tall.

The GOMACO-designed G+ controls on the GT-3200 provide a new, more powerful controller for paving accuracy and electronic monitoring of steering and grade. The GT-3200's C4.4T Caterpillar® Tier 3 engine, with 91 hp (68 kW) @ 2300 rpm, provides plenty of power for barrier applications.

CV-040904 D4

The GT-3200 with right-side mounted barrier wall. It was also on display at Intermat 2009.

Right-side or left-side barrier slipforming can be accomplished with the new generation GT-3200. The machine's front track assembly can be mounted to the flange on the front of the machine for a left-side pour, or mounted to a flange on the back of the machine for a right-side pour. The side-mounted operator's platform has a modular design and is strategically positioned to allow the operator to view the delivery of concrete to the charging end of the conveyor and to the hopper of the barrier mold. The operator has an excellent view of the finished barrier, while maintaining hands-on control of the machine.

The new style GT-3200 features the same hydraulically telescoping frame as previous models. It allows up to 36 inches (914 mm) of lateral leg movement to accommodate changing job-site requirements.

CG-010909 D11

Saif Bin Darwish slipforms curb and gutter with their new GT-3200 in Abu Dhabi, United Arab Emirates.

CG-010903 D5

Tramo/TRBA slipforms curb and gutter with their GT-3600 and the TSD stringless system on a project near Peruwelz, Belgium.

CG-020904 D4

WBHO slipforms a new runway at the Sir Seretse Khama International Airport near Gaborone, Botswana. They are using a new Commander III four-track paver and a T/C-600 texture/cure machine to pave the five meter (16.4 ft) wide passes.

GOMACO around the world

FT-040901 D9

Giampietro Nasci trims grade with a GOMACO 9500 on a road project near Pezu, Pakistan.

CV-040911 D3

GOMACO showcased equipment at Intermat 2009 in Paris, France. The exhibition drew customers from Europe, the Middle East, Africa, and Eastern Europe.

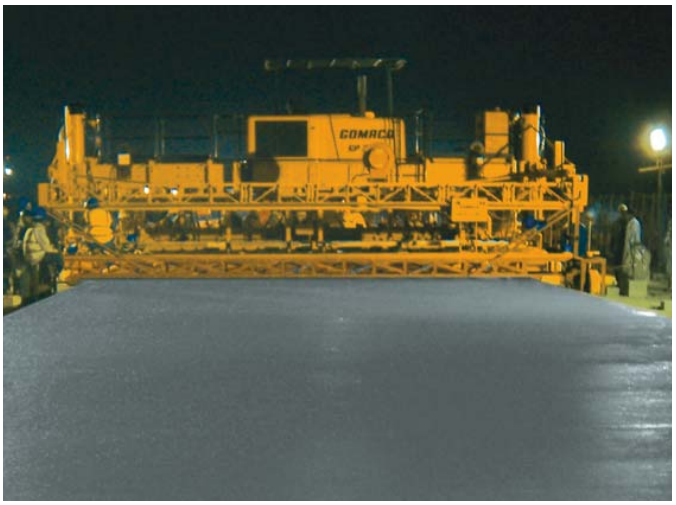

HW-030901 D3

Orascom Construction Industries paves at night a new apron with their GP-2600 two-track paver at the Borg El Arab International Airport in Alexandria, Egypt.

GOMACO
GOMACO CORPORATION
POST OFFICE BOX 151
IDA GROVE IA USA 51445

www.gomaco.com

ADDRESS SERVICE REQUESTED

PRINTED IN USA

PRSRT STD
U.S. POSTAGE PAID
SIOUX FALLS, SD
PERMIT NO. 1209

A New Irrigation Canal in Northern Italy

Thiene Costruzioni S.r.l. is currently at work finishing 30 kilometers (18.6 mi) of irrigation canal on the Adige River in northern Italy. Thiene is using their GOMACO SL-650 two-track canal machine to finish the nine meter (29.5 ft) wide canal passes.

The new canal is being finished at a 3:2 slope over continuous steel reinforcing. The concrete is 150 millimeters (6 in) thick. Production is averaging 90 meters (295 ft) or 800 square meters (957 yd^2) per day.

A *GOMACO SL-650 canal machine finishes a new irrigation canal on the Adige River in northern Italy.*

Photo by Andy Linham SL-040901 D11