(12) INTERNATIONAL APPLICATION PUBLISHED UNDER THE PATENT COOPERATION TREATY (PCT)

(19) World Intellectual Property Organization
International Bureau
(43) International Publication Date
19 April 2012 (19.04.2012)

PCT

(10) International Publication number
WO 2012/048847 A1

(51) International Patent Classification:
*B42D 15/00* (2006.01) *G02B 5/04* (2006.01)
*G02B 27/22* (2006.01) *G02B 5/10* (2006.01)
*G02B 3/00* (2006.01)

(21) International Application Number:
PCT/EP2011/005071

(22) International Filing Date:
11 October 2011 (11.10.2011)

(25) Filing Language: German

(26) Publication Language: German

(30) Priority Data
10 2010 048 262.5 12 October 2010 (12.10.2010)
DE

(71) Applicant: *(for all designated states, except the US)* **GIESECKE & DEVRIENT GMBH** [DE/DE]; Prinzregentenstrasse 159, 81677 Munich (DE).

(72) Inventor; and

(75) Inventor/Applicant *(only for US)* **FUHSE, Christian [DE/DE]**; Bahnhofstraße 22, 83624 Otterfing (DE) **KAULE, Wittich** [DE/DE]; Lindacher Weg 13, 82275 Emmering (DE).

(74) Joint representative: **GIESECKE & DEVRIENT GMBH;** Patent and Licencing Department, Prinzregentenstrasse 159, 81677 Munich (DE).

(81) Designated States *(unless otherwise indicated, for every kind of national protection available)*: AE, AG, AL AM, AO, AT, AU, AZ, BA, BB, BG, BH, BR, BW, BY, BZ, CA, CH, CL, CN, CO, CR, CU, CZ, DE, DK, DM, DO, DZ, EC, EE, EG, ES, FI, GB, GD, GE, GH, GM, GT, HN, HR, HU, ID, IL, IN, IS, JP, KE, KG, KM, KN, KP, KR, KZ, LA, LC, LK, LR, LS, LT, LU, LY, MA, MD, ME, MG, MK, MN, MW, MX, MY, MZ, NA, NG, NI, NO, NZ, OM, PE, PG, PH, PL, PT, QA, RO, RS, RU, RW, SC, SD, SE, SG, SK, SL, SM, ST, SV, SY, TH, TJ, TM, TN, TR, TT, TZ, UA, UG, US, UZ, VC, VN, ZA, ZM, ZW.

(84) Designated States *(unless otherwise indicated, for every kind of regional protection available)*: ARIPO (BW, GH, GM, KE, LR, LS, MW, MZ, NA, RW, SD, SL, SZ, TZ, UG, ZM, ZW), eurasisches (AM, AZ, BY, KG, KZ, MD, RU, TJ, TM), europäisches (AL, AT, BE, BG, CH, CY, CZ, DE, DK, EE, ES, FI, FR, GB, GR, HR, HU, IE, IS, IT, LT, LU, LV, MC, MK, MT, NL, NO, PL, PT, RO, RS, SE, SI, SK, SM, TR), OAPI (BF, BJ, CF, CG, CI, CM, GA, GN, GQ, GW, ML, MR, NE, SN, TD, TG).

eurasisches: Eurasian, europäische: European

**Declaration acc. to Rule 4.17:**

*[continued on next page]*

(54) Title: REPRESENTATION ELEMENT COMPRISING OPTICAL ELEMENTS ARRANGED ON A SUBSTRATE, FOR PRODUCING AN IMAGE COMPOSED OF LIGHT SPOTS AND SUSPENDED ABOVE OR BELOW THE SUBSTRATE

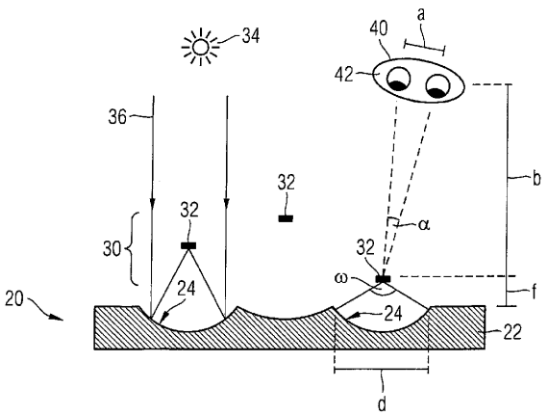


Fig. 2

(57) Abstract: The invention relates to a depiction element (20) comprising a substrate (22) having a surface region in which a plurality of optical elements (24) is arranged. According to the invention, the depiction element (20) is designed and intended to produce, when illuminated (34), a light spot image (30) consisting of a plurality of light spots (32) that appear to an observer (40) to be floating above or below the surface region, and are arranged in the form of a specified motif, wherein said optical elements are formed by refractive and/or reflective optical elements (24) and at least one refractive and/or reflective optical element is assigned to each light spot (32) of the light spot image, contributing to the production of the light spot (32) assigned thereto when the depiction element (20) is illuminated (34).

*[continued on next page]*

WO 2012/048847 A1



Giesecke+Devrient GmbH,
Giesecke+Devrient Currency Technology GmbH,
and Papierfabrik Louisenthal GmbH. - Ex. 1022

*- with regard to the entitlement of the applicant to apply for and be granted a patent (Rule 4.17(ii))*

*- - with regard to the entitlement of the applicant to claim the priority of an earlier application (Rule 4.17(iii)*

**Published**:
*- with International Search Report (Article 21 para 3)*

*- prior to expiry of the deadline applicable to amendments of the claims; re-publication in case amendments are received (Rule 48 para 2 (h)*



Giesecke+Devrient GmbH,
Giesecke+Devrient Currency Technology GmbH,
and Papierfabrik Louisenthal GmbH. - Ex. 1022

# DEPICTION ELEMENT WITH OPTICAL ELEMENTS ARRANGED ON A SUBSTRATE FOR PRODUCING AN IMAGE FLOATING ABOVE OR BELOW THE SUBSTRATE, COMPOSED OF LIGHT SPOTS

## Description

The invention relates to a depiction element having a substrate with a surface region in which a plurality of optical elements are arranged. The invention also relates to a method for manufacturing such a depiction element and a data carrier having such a depiction element.

Data carriers, such as value or identification documents, but also other valuables, such as branded items, are often furnished with security elements for security purposes, which allow the authenticity of the data carrier to be checked and which also serve as protection against unauthorized reproduction.

Special attention is currently being paid to security elements with three-dimensional images because, on the one hand, they are easy to recognize and check even for laypeople and, on the other hand, they cannot be reproduced true to the original using common copying processes.

Several techniques are known with which a three-dimensional image impression can be created when viewing flat images with both eyes. In anaglyph images, two stereoscopic fields are superimposed on each other. When viewed with an aid such as red-green glasses or polarized glasses, the two fields are separated for the two eyes.

Another technique uses lenticular or mirror raster images, which consist of a multi-layer structure with a motif layer and lenticular or mirror images spaced from the motif layer. An example of this technology are the 3D moiré magnifiers, as described in the publication WO 2009/000530 A2.

Another approach, such as that described in document WO 90/08338 A1, is to form the motif as a flat relief, with the surface of the motif being imitated and/or fragmented in the surface of the image.



Giesecke+Devrient GmbH,
Giesecke+Devrient Currency Technology GmbH,
and Papierfabrik Louisenthal GmbH. - Ex. 1022

Finally, holograms, holographic stereograms and hologram-like grid images have long been used for security elements in order to create a three-dimensional image impression. In this technique, light diffraction and interference on the holographic structures and diffraction gratings play a crucial role.

Based thereon, the invention is based on the object of creating a depiction element of the type mentioned at the outset, which has an attractive visual appearance. For security applications, the depiction element should also have a high level of protection against counterfeiting and should also be easy for laypeople to check for authenticity.

This object is achieved by the depiction element with the features of the main claim. A method for manufacturing such a depiction element, a data carrier equipped with such a depiction element and a display device equipped with such a depiction element are specified in the independent claims. Refinements of the invention are the subject of the dependent claims.

According to the invention, a generic depiction element contains a substrate with a surface region in which a plurality of optical elements are arranged. The depiction element is designed and intended to produce, upon illumination, a light-spot image composed of a plurality of light spots, that for a viewer appear floating above or below the surface region and that are arranged in the form of a specified motif. For this purpose, the optical elements mentioned are formed by refractive and/or reflective optical elements, wherein there being assigned to every light spot of the light-spot image at least one refractive and/or reflective optical element that, upon illumination of the depiction element, contributes to producing the light spot assigned to it.

The invention is therefore based on the idea of specifying a three-dimensional motif that consists of light spots floating above or below the depiction element. In order to generate the light spots when illuminated, the depiction element has juxtaposed or nested parts of mirrors, lenses or prisms which are designed to produce light reflections floating in an image space under suitable illumination, which together represent the specified three-dimensional motif. In the physical sense, the floating light reflections are real images or virtual images of the illuminating light sources, as explained in more detail below. The visual impression is particularly good in this case when the depiction element is illuminated with parallel light, for example from a light source that is far away.

The three-dimensional light-spot image created by the illumination offers the viewer an unusual and visually appealing three-dimensional image impression, which gives the depiction element a



**Giesecke+Devrient GmbH,
Giesecke+Devrient Currency Technology GmbH,
and Papierfabrik Louisenthal GmbH. - Ex. 1022**

high level of attention and recognition value. The presence or absence of the effect is easy for any user to detect, so the depiction element can be easily verified. Nevertheless, the mirror or lens arrangement is difficult for a potential counterfeiter to recreate due to the necessary know-how and the required technology.

In the following, the refractive and/or reflective optical elements are usually only referred to as “optical elements” for the sake of shorter naming. However, it should be understood that within the scope of the invention this always means refractive and/or reflective optical elements. The optical elements can be either purely refractive, such as a lens or a microprism, purely reflective, such as a mirror or a micromirror, or both refractive and reflective, such as a lens provided with a semi-transparent coating or a microprism provided with a semi-transparent coating. In any case, diffraction and interference effects play no role in the refractive and/or reflective optical elements according to the invention and can always be neglected.

In a preferred configuration, the optical elements and the floating heights of the light spots are designed so that the condition $f/d < 5$ applies to the light spots and the assigned optical elements, where f denotes the floating height of a light spot above or below the surface region, and d denotes the diameter of the optical elements that contribute to said light spot. This ensures that the light spots are within the opening of the associated optical element for both eyes of the observer at a normal viewing distance of about 30 cm.

According to an advantageous variant of the invention, the light spots of the light-spot image float at several different floating heights above or below the surface region in order to form a three-dimensional motif. According to an alternative, also advantageous variant of the invention, the light spots of the light-spot image all float, in some regions, at the same floating height above or below the surface region in order to form a backdrop motif. A three-dimensional motif can also advantageously be combined with a two-dimensional motif in the light-spot image, since a light-spot image can then still be recognized even in poor illumination conditions and an authenticity check can therefore be carried out.

The optical elements expediently comprise convex mirrors, in particular concave mirrors (concavely convex mirrors) or convex mirrors (convexly convex mirrors). The convex mirrors can be spherical, elliptical, rotational-symmetrically aspherical, non-rotation-symmetrically aspherical or trough-shaped, in the latter case, the troughs running rectilinearly or curvilinearly. Elliptical mirrors have different mirror curvatures in the x and y directions; in aspherical mirrors the mirror surface deviates from a spherical shape. Aspherical mirrors can be rotationally



**Giesecke+Devrient GmbH,
Giesecke+Devrient Currency Technology GmbH,
and Papierfabrik Louisenthal GmbH. - Ex. 1022**

symmetrical or, in the most general case, non-rotationally symmetrical. Rectilinear, trough-shaped mirrors can be viewed as a special case of elliptical mirrors, in which the radius of curvature is infinitely large in one spatial direction. In order to achieve a low structural height, the convex mirrors can also be at least partially formed by Fresnel mirrors.

Alternatively or additionally, the optical elements can also comprise lenses, in particular spherical, elliptical, rotation-symmetrically aspherical, non-rotation-symmetrically aspherical or cylindrical lenses. Elliptical lenses have different curvature in the x and y directions; in aspherical lenses, the refractive lens surface deviates from a spherical shape. Aspherical lenses can be rotationally symmetrical or, in the most general case, non-rotationally symmetrical. Cylindrical lenses can be viewed as a special case of elliptical lenses, in which the radius of curvature is infinitely large in one spatial direction. The lenses can also be at least partially formed by Fresnel lenses in order to achieve a lower structural height.

In an advantageous variant of the invention, exactly one optical element is assigned to each light spot of the light-spot image.

According to an alternative, also advantageous variant of the invention, not only one optical element, but a plurality of optical elements is assigned to every light spot of the light-spot image. Assignment means here that the optical element contributes to the creation of this light spot when illuminated by reflection and/or refraction. The optical elements are preferably distributed spaced apart on the surface region. Due to the resulting gaps formed between the individual optical elements, several groups of optical elements, which are each assigned to different light spots, can then be arranged nested in the same surface region. In this way, a particularly high spatial resolution can be achieved in the light-spot image, as explained in more detail below.

A further advantage of assigning a plurality of optical elements to a light spot has been found to be that, due to the possible smaller dimensions of the individual optical elements, elements with flat boundary surfaces can be used, which are easier to calculate and manufacture than a single curved optical element of the same visual effect.

In order to generate a light-spot image in which the light spots have different brightnesses, each light spot of the light-spot image is advantageously assigned a number of optical elements which correspond to the brightness of the light spot within the motif formed by the light spots. If the optical elements are of different sizes, each light spot can also be assigned a total area of



**Giesecke+Devrient GmbH,
Giesecke+Devrient Currency Technology GmbH,
and Papierfabrik Louisenthal GmbH. - Ex. 1022**

optical elements that corresponds to the brightness of the light spot within the motif formed by the light spots.

The optical elements are particularly preferably formed by flat micromirrors or by small microprisms.

The specified motif can also be a changing image that from different viewing directions displays different images. A specific example of generating such a changing image is described below. It should be understood that the term “changing images” also comprises images in which only parts of the image are subject to changing.

In changing images, images or parts of the image change when the viewing direction changes, especially when the image is tilted; which is why such pictures are also called tilt images. The change can occur when tilting horizontally or vertically, or when tilting in a direction between horizontal and vertical.

If the change in image content occurs abruptly, it is referred to as flip images. If the change occurs via intermediate stages, it is referred to as morphing images.

Furthermore, 2D-3D images can also be formed as a light-spot image. In addition to parts with 3-dimensional effects (which can be seen in front of or behind the plane of the depiction element or appear to penetrate the plane of the depiction element), there are also parts with 2-dimensional effects in or near the plane of the depiction element (at height level 0 or near height level 0)

In a 2D-3D image, 2D and 3D parts can lie next to each other and/or appear alternately in the same place when the viewing direction changes. With such a 2D-3D changing image, e.g., a two-dimensional image content (e.g., a font or a logo) can be shown and hidden in a 3D image depending on the direction.

In an advantageous variant of the invention, the specified motif produced by the depiction arrangement is a three-dimensional body formed by the light spots.

According to a refinement of the invention, the surface region in which the plurality of optical elements is arranged can also be curved, for example cylindrically or spherically curved.



**Giesecke+Devrient GmbH,
Giesecke+Devrient Currency Technology GmbH,
and Papierfabrik Louisenthal GmbH. - Ex. 1022**

In a further variant of the invention, a subset of the optical elements produces a hidden piece of image information that is not perceptible without auxiliary means. The hidden piece of image information is in contrast to the open piece of image information formed by the light-spot image described above, which can be seen with the naked eye under normal illumination without any additional auxiliary means. The hidden piece of image information, on the other hand, is not readily visible to the naked eye under normal illumination, but is only visible with directed illumination with laser light, for example, or requires a special collecting screen.

In an advantageous variant of the invention, the optical elements comprise a periodic arrangement of micromirrors, each of which has a distance to the nearest neighbor of 2 mm or less, in particular 1 mm or less. A viewer then no longer recognizes the reflections of the mirrors, but only sees one point of light per mirror, the shape of which depends on the illumination of the surroundings. If the viewer tilts the depiction element, the light points of the mirror move slightly to the side, depending on the design of the mirror as a concave or convex mirror, as if the light points were in front of or preferably behind the plane of the depiction element. Due to the periodic arrangement of the micromirrors, the viewer sees a regular grid of light points which, when the depiction element is tilted, preferably appear to move as if they were in a plane further back. The light point grid can therefore form the background for another motif, for example for the arching effect described in the also pending German patent application DE 10 2009 056 934.0, or for a sawtooth representation with a kinematic effect, such as the hologram structures of the publication EP 0 868 313 B1 (paragraph [0034] or Fig. 8 with reflective sawtooth structures).

In order to protect the optical elements from contamination and abrasion on the one hand and, on the other hand, to effectively prevent unauthorized reproduction by imprinting the surface structure, the optical elements are advantageously embedded in a surrounding layer or a surrounding layer composite, in particular in a protective layer. Such embedding usually changes the floating height of the light spots, since a difference in refractive index between the embedding material and air or embedding material and lens material changes the optical beam path. However, such a change in the optical beam path can easily be taken into account when designing the optical elements, so that the desired floating heights are achieved after embedding.

In an advantageous configuration, the optical elements are designed as embossed structures in an embossing lacquer layer. If the depiction element is at least partially reflective, the embossed structures are preferably provided with a reflection-increasing coating. In particular, a full-



**Giesecke+Devrient GmbH,
Giesecke+Devrient Currency Technology GmbH,
and Papierfabrik Louisenthal GmbH. - Ex. 1022**

surface or gridded metallization, a high-refractive index coating, a thin-film element with a color-shifting effect or a cholesteric liquid crystal layer can be considered as a reflection-increasing coating.

The structure heights of the embossed structures are preferably below 100 µm, preferably below 20 µm, particularly preferably below 5 µm.

The depiction elements according to the invention can be combined with other security features, for example with diffractive structures, with hologram structures in all design variants, metallized or non-metallized, with subwavelength structures, metallized or non-metallized, with subwavelength gratings, with layer systems that show a color change when tilted, semi-transparent or opaque, with diffractive optical elements, with refractive optical elements, such as prism beam formers, with special hole shapes, with security features with specifically adjusted electrical conductivity, with incorporated materials with magnetic coding, with materials with phosphorescent, fluorescent or luminescent effects, with security features based on liquid crystals, with matt structures, with additional micromirror elements, with elements with a Venetian blind effect or with sawtooth structures. Further security features with which the depiction elements according to the invention can be combined are specified in publication WO 2005/052650 A2 on pages 71 to 73; these are included in the present description.

The invention also includes a method for producing a refractive depiction element of the type described, which is designed and intended, when illuminated, to generate a light-spot image from a plurality of light spots which appear to a viewer to be floating above or below the surface region and which are arranged in the form of a specified motif. In the method, a substrate is provided and a plurality of refractive and/or reflective optical elements are arranged in a surface region of the substrate, with each light spot of the light-spot image being assigned at least one refractive and/or reflective optical element that, upon illumination of the depiction element, contributes to producing the light spot assigned to it.

According to an advantageous method variant
- a desired three-dimensional motif having image points $P_j$ and height values $Z_j$ above an xy plane is specified, the image points corresponding to the light spots created upon illumination,
- for every image point $P_j$, a brightness $I_j$ between 0% and 100% is defined,
- there are assigned to the image points $P_j$ aperture cones that have an aperture ratio $> 0.2$,



Giesecke+Devrient GmbH,
Giesecke+Devrient Currency Technology GmbH,
and Papierfabrik Louisenthal GmbH. - Ex. 1022

- for every image point $P_j$, a sphere of influence $E_j$ is determined by an intersection of the aperture cone originating from the image point with the xy plane,
- the xy plane is divided into a number of coarse fields, and the coarse fields are each divided into a number of fine fields,
- for every image point $P_j$, based on the defined height value $Z_j$ and the defined brightness value $I_j$, a number of fine fields to be filled in is determined,
- the fine fields to be filled in determined for the image point $P_j$ are distributed substantially evenly across the coarse fields in the sphere of influence $E_j$ of the image point $P_j$, and
- the fine fields to be filled in are covered with refractive and/or reflective optical elements that, upon illumination of the depiction element, contribute to producing the light spot that corresponds to image point $P_j$.

According to a further advantageous variant of the invention, a three-dimensional body is depicted by floating light spots. This is preferably based on a data set which describes the surface of the body to be depicted by spots in space, corner spots of polygons, normal vectors and absorption behavior (color, brightness).

Such data sets, suitable data formats and processing methods are basically known to the person skilled in the art, examples include, for example, VRML (Virtual Reality Modeling Language), STL (Surface Tesselation Language; Standard Triangulation Language) or 3D-CAD (3D Computer Aided Design).

Data sets describing the surface of a body can, for example, be generated in computer-aided technical drawing or through 3D laser scanning of real three-dimensional bodies. In the latter method, spots in space are captured that describe the body when scanning the body. These spots can, for example, be stored on the computer in so-called point cloud format.

To create a 3D light spot image of a three-dimensional body, such data set must be processed as described below using steps a) to c) as an example:

a) Lighting concept

In order give visibility to the body surface light - dark contrasts are required. A body appears most natural when these light - dark contrasts are generated by means of a lighting concept. For this purpose, one or more light sources are imagined to be attached outside the body, and the surface brightness at all relevant spots of the body are identified using Lambert`s cosine law,



**Giesecke+Devrient GmbH,
Giesecke+Devrient Currency Technology GmbH,
and Papierfabrik Louisenthal GmbH. - Ex. 1022**

the law of reflection or another suitable physical laws from the directions of the fictional light sources, the surface normals and the absorption behavior.

b) Light spot generation

As described above, each relevant body spot is assigned catchment areas in an arrangement of micromirrors or microprisms. Within the catchment area certain areas are covered with micromirrors or microprisms in a manner described above such that the body spot shines in the desired brightness.

c) Occlusion calculation

Finally, when viewing a three-dimensional body from a viewing direction, it has a front and a back side, so that some body parts are hidden and invisible. Therefore, care must be taken that each microelement (or micromirror or microprism) is only assigned to one spot on the body surface which is closest or most distant on the connecting straight line of microelement and body, depending from which side the light spot image is to be viewed. This spot on the body surface is determined by methods of concealment calculation, as known from 3D CAD such as ray tracing or Z-buffer methods. When including actually covered spots in the light spot image a body will appear transparent, which is in exceptional cases however may be desired also.

Finally, the invention also contains a data carrier with a depiction element of the type described, wherein the depiction element can be arranged in particular as a reflective security element in an opaque region of the data carrier, or as an at least partially transparent security element in or above a transparent window area or a continuous opening of the data carrier. The data carrier can in particular be a value document, such as a banknote, in particular a paper banknote, a polymer banknote or a film composite banknote, but also an identification card, such as a credit card, a bank card, a cash payment card, an authorization card, an identity card or a passport personalization page.

The invention further contains a display device with a control device and a depiction element of the type described above, the spatial alignment of the optical elements of the depiction element being adjustable by the control device. In this way, the depiction element can show different light-spot images depending on the control. The change in the spatial orientation of the optical elements can occur very quickly, giving the viewer the impression of a continuous sequence of images. The display device can therefore be used as a 3D display for a wide variety of applications.



**Giesecke+Devrient GmbH,
Giesecke+Devrient Currency Technology GmbH,
and Papierfabrik Louisenthal GmbH. - Ex. 1022**

Finally, the invention includes a method for manufacturing a volume hologram wherein, in a recording disk, for example a photopolymer disk, unscattered laser radiation as the reference wave and laser radiation reflected and deflected by a depiction element of the type described above as object wave are made to create interference. To this end, in the case of depiction elements with reflective optical elements, such as micromirrors, the reflected laser radiation is used as the object wave while in the case of depiction elements with refractive optical elements, such as microprisms, the deflected laser radiation is used as the object wave.

Further exemplary embodiments and advantages of the invention are explained below with reference to the figures, which are not reproduced to scale and proportions for the sake of clarity.

In the figures:

Fig. 1 shows a schematic representation of a banknote with a security element according to the invention,

Fig. 2 shows schematically a first exemplary embodiment of the invention with concave mirrors as reflective optical elements,

Fig. 3 shows another embodiment of the invention with convex mirrors as reflective optical elements,

Fig. 4 shows a specified light spot motif in the form of a three-dimensional light pyramid,

Fig. 5 shows in (a) a convex mirror and in (b) the convex mirror from (a) replaced by a Fresnel mirror,

Fig. 6 shows a top view of a plurality of convex mirrors, in (a) with mirrors with a square base, and in (b) with trough-shaped mirrors of different orientation,

Fig. 7 shows a further exemplary embodiment of the invention, in which the refractive optical elements are formed by lenses,

Fig. 8 shows in (a) to (d) four exemplary embodiments in which a curved concave mirror is broken down into micro-optical elements with a square base and a flat mirror surface,



**Giesecke+Devrient GmbH,
Giesecke+Devrient Currency Technology GmbH,
and Papierfabrik Louisenthal GmbH. - Ex. 1022**

Fig. 9 shows covering a checkerboard-like arrangement according to Fig. 8(b) with micromirrors, wherein (a) shows an intermediate step with only one micromirror group, and (b) shows the complete covering with two micromirror groups for two closely adjacent light spots,

Fig. 10 illustrates the calculation of the flat mirror surfaces of the micromirrors of Figs. 8 and 9,

Fig. 11 illustrates the calculation of microprisms resulting from the dissection of a converging lens, and

Fig. 12 shows schematically a security element with embedded micromirrors, and

Fig. 13 shows in (a) to (c) three configurations in which a light spot image according to the invention serves as a master for a volume hologram.

The invention will now be explained using the example of security elements for banknotes. Fig. 1 shows a schematic representation of a banknote 10, which is provided with a security element 12 according to the invention. Security element 12 can be designed as a reflective security element, which is present in an opaque area of banknote 10, or can be designed as a see-through security element, which is arranged, for example, over a transparent window area of banknotes 10.

When illuminated, for example by sunlight or a ceiling lamp, security element 12 produces a three-dimensional light-spot image for a viewer from a plurality of light spots, each of which appears to a viewer to float above or below the level of security element 12. Different light spots have different floating heights, so that the light spots together form a three-dimensional motif, for example a light pyramid protruding from the banknote.

These light-spot images created by the illumination and projecting forward or back from the banknote offer the viewer an unusual, visually appealing three-dimensional image impression that is easy to examine and memorize even for laypeople.

To explain the principle of the invention, Fig. 2 shows a first exemplary embodiment of a security element 20, in which three-dimensional motif 30 is represented in simplified form by three image points 32. Security element 20 contains a substrate 22 which contains a plurality of small concave mirrors 24 in a surface region. Since only three image points 32 of the motif are



**Giesecke+Devrient GmbH,
Giesecke+Devrient Currency Technology GmbH,
and Papierfabrik Louisenthal GmbH. - Ex. 1022**

shown in simplified form in the figure, only three concave mirrors 24 are shown accordingly. However, it shall be understood that in practice a security element 20 will typically have a large number, for example a few tens, a few hundred or even several thousand, refractive and/or reflective optical elements 24. Specific examples of security elements with a large number of optical elements are described below.

Referring again to the representation of Fig. 2, the focal length f of concave mirrors 24 arranged in the plane of substrate 22 is selected in each case so that concave mirrors 24 produce the specified image points as light spots 32 when illuminated by a distant light source 34. Specifically, light spots 32 represent real images of the light source, as indicated by geometric beam path 36 in the left part of the image in Fig. 2.

A three-dimensional image impression, i.e., the perception of viewer 40 that light spots 32 are floating at a certain height above the surface of substrate 22, only arises through binocular vision. For this purpose, the design of the concave mirror arrangement must ensure that real images 32 of light source 34 for both eyes 42 lie within the opening of the relevant optical system, here a hollow mirror 24.

As illustrated in the right-hand part of Fig. 2, a light spot 32 lies within the opening of concave mirror 24 for both eyes 42 exactly when the opening angle $\omega$ of concave mirror 24, viewed from the light spot 32, is greater than the viewing angle $\alpha$ of observer 40. The opening angle $\omega$ is given by the ratio of the mirror diameter d and the focal length f, $\omega = d/f$ and the viewing angle $\alpha$ is given by the ratio of the eye distance a and the viewing distance b, i.e., $\alpha = a/b$. For a typical eye distance $a \approx 6.5$ cm and a typical viewing distance $b \approx 30$ cm, the relationship

$$f/d < b/a \approx 5$$

is obtained, i.e., the condition that the ratio of the floating height f of a light spot 32 to the diameter of the light spot-generating concave mirror 24 must be smaller than about 5. If the diameter of concave mirror 24 is, for example, d = 0.5 mm, as in the exemplary embodiment of Fig. 2, then floating heights of up to 2.5 mm can be achieved with a three-dimensional image impression.

The refractive and/or reflective optical elements can have dimensions of a few 100 µm or even a few millimeters, but can also be designed significantly smaller. For example, a concave mirror can be broken down into a plurality of micromirrors and these can be distributed over a certain



**Giesecke+Devrient GmbH,
Giesecke+Devrient Currency Technology GmbH,
and Papierfabrik Louisenthal GmbH. - Ex. 1022**

surface region of substrate 22, as explained in more detail below. In any case, however, the dimension of an optical element used according to the invention is significantly above the wavelength of light, so that diffraction and interference effects can be neglected. In particular, the dimensions of the optical elements are therefore advantageously above 2 µm, preferably even above 5 µm.

Light spots 32 of specified motif 30 can float not only above but also below surface 22 of the substrate for viewer 40. Referring to Fig. 3, a plurality of small convex mirrors 26 are arranged in a surface region of substrate 22, the focal lengths of which are selected so that convex mirrors 26 produce the specified image points as light spots 32 when illuminated by a distant light source 34. Specifically, in this case, light spots 32 represent virtual images of light source 34, which appear to the viewer to float below the surface of the substrate, as indicated by geometric beam path 38 in the right part of the image in Fig. 3.

Concave and convex mirrors can also both be provided in the same security element if parts of the motif are to protrude and other parts are to recede behind the substrate surface. For illustration, Fig. 4 shows a specified motif in the form of a three-dimensional light pyramid 50 made up of a plurality of light spots 52 that float at different floating heights above or below the surface of substrate 22.

In the exemplary embodiment of Fig. 4, all convex mirrors are designed with a diameter of 0.5 mm. The focal length f is given as positive for concave mirrors (floating height above the substrate surface) and negative for convex mirrors (floating height below the substrate surface). With this convention, light spot 52-1 of the pyramid tip has a floating height of f = +2 mm, while light spots 52-2 and 52-3 of the pyramid edges float at a height f = +1.2 mm and f = +0.4 respectively. Light spots 52-1 to 52-3 with their positive floating heights are produced by concave mirrors, as basically already explained in Fig. 2.

In pyramid 50, moving further outwards, light spots 52-4 and 52-5 have a floating height of f = -0.4 mm and f = -1.2 mm, respectively, so they float below substrate surface 22 for the viewer. The pyramid base is finally formed from light spots 52-6, which have a floating height of f = -2 mm and are therefore 4 mm below pyramid tip 52-1.

For all light spots 52, the condition $|f|/d < 5$ is met, so that pyramid 50 appears truly three-dimensional to the viewer at a normal viewing distance and appears to pierce the substrate plane from bottom to top.



**Giesecke+Devrient GmbH,
Giesecke+Devrient Currency Technology GmbH,
and Papierfabrik Louisenthal GmbH. - Ex. 1022**

The floating height of the light spots is determined by the radius of curvature of the convex mirrors, as shown in Fig. 5(a) as an example for a convex mirror 60. With a diameter d and a radius of curvature r, convex mirror 60 has a focal length of f = r/2. For example, a mirror diameter d = 0.5 mm requires a radius of curvature of r = 4 mm for a focal length or floating height of f = 2 mm. In this case, the structural height of the convex mirror h = 7.8 µm is determined by the relationship $h*(2r - h) = (d/2)^2$.

Depending on the desired floating height, mirror structures can arise whose height h is too large for a desired application, for example because a maximum permissible embossing height or embossing depth in an embossed layer is exceeded. In this case, convex mirror 60 of Fig. 5(a) can be replaced by a corresponding Fresnel mirror 62, which has a significantly lower structure height $h_f$, as shown in Fig. 5(b). The zone widths z of Fresnel zones 64 can be chosen arbitrarily as long as they are large compared to the wavelength of light, in particular as long as z > 2 µm. Otherwise, the width z of Fresnel zones 64 is irrelevant for the optical effectiveness of Fresnel mirror 62.

If the convex mirrors of a security element have several different focal lengths, i.e., if the light spots of the light-spot image have several different floating heights above and/or below the substrate surface, a truly three-dimensional motif is created. In some configurations, however, it may also be advisable to design all convex mirrors with the same focal length, so that all light spots in the light-spot image have the same floating height. In this way, a backdrop motif is created that floats at a certain height above or below the substrate surface.

The convex mirrors do not have to be spherically curved. Elliptical concave or convex mirrors, which have different mirror curvatures in the x and y directions, can also be used as optical elements according to the invention. Since the focal length f of a convex mirror is proportional to the radius of curvature r according to what was said above, when an elliptically convex mirror is rotated, the floating height f of the associated light spot changes for the viewer.

If a given motif contains at least partially elliptical concave or convex mirrors, the light spots in the focal planes of the respective parts rise in front of the background or sink into the background when the arrangement is rotated. This effect is particularly noticeable when the light spots that rise or fall during rotation are combined with light spots that do not change during rotation, which represent a stationary reference point for the eye.



**Giesecke+Devrient GmbH,
Giesecke+Devrient Currency Technology GmbH,
and Papierfabrik Louisenthal GmbH. - Ex. 1022**

With reference to the top view of Fig. 6(a), the plurality of convex mirrors 70, for example with a rectangular or square base, can be arranged in a surface region 72 of the security element.

For a viewer to have a three-dimensional image impression, a lateral parallax is sufficient, i.e., a parallax along the connecting line of two eyes 42 of viewer 40. Convex mirrors 74, 76, 78 can therefore also be trough-shaped, as shown in the top view of Fig. 6(b). Trough-shaped convex mirrors only have a non-zero curvature in one direction, namely perpendicular to the trough, while the curvature disappears in the trough direction.

Attractive visual effects can also be achieved with an image constructed from trough-shaped convex mirrors 74, 76, 78. At a suitable viewing angle, the light spots appear floating above or below the substrate surface in the form of luminous lines hanging in the air.

Because of the eyes lying next to each other, the strongest spatial effect is achieved in a 3D trough image with troughs 74 running perpendicular to the connecting line of eyes 42. However, oblique troughs 76 also have a vertical component and thus also produce a light-spot image with a three-dimensional effect.

When rotating (80) an image with troughs 76 lying diagonally in image plane so that the troughs are vertical, the three-dimensional effect is intensified. However, if the viewer turns troughs 76 horizontally, the three-dimensional impression is reduced. In the case of a security element which, as shown in Fig. 6(b), contains sections with different orientation of troughs 74, 76, 78, the light spots of the respective sections rise in front of the background or sink into the background upon rotation (80) of the arrangement.

Trough-shaped convex mirrors are understood to mean both trough-shaped concave mirrors and trough-shaped convex mirrors. Trough-shaped concave mirrors create light spots that float above the substrate surface, while trough-shaped convex mirrors create light spots that float below the substrate surface.

Furthermore, the trough-shaped convex mirrors do not have to be straight, as shown in Fig. 6(b), but they can also be curvilinear. Such a configuration can also create attractive visual effects.

In a further variant of the invention illustrated in Fig. 7, the optical elements are formed by light-refracting (refractive) lenses instead of reflecting mirrors. In this case, refractive security



**Giesecke+Devrient GmbH,
Giesecke+Devrient Currency Technology GmbH,
and Papierfabrik Louisenthal GmbH. - Ex. 1022**

element 90 represents a see-through security element that is checked for authenticity by viewer 40 when viewed through a light source 95 that is ideally far away.

Both converging lenses 92 and diverging lenses 96 can be used as lenses, wherein, as seen from viewer 40, convex converging lenses 92 produce light spots 94 floating above security element 90 as real images, and concave diverging lenses 96 produce light spots 98 floating below security element 90 as virtual images.

The lenses can in particular be spherical, elliptical or cylindrical. Cylindrical lenses produce line-like spots of light; with elliptical lenses, the floating height of the light spots changes when the security element is rotated, as already described above for elliptical mirrors. For plano-convex or plano-concave lenses 92, 96 shown in Fig. 7, the following applies to the diameter d, the radius of curvature r, the focal length f and the lens height h with a refractive index of the lens material of n = 1.5 for lenses bordering on air:

$$f = 2*r \text{ and}$$

$$h*(2r - h) = (d/2)^2$$

At a given lens diameter d and desired floating height f, the radius of curvature r and structure height h of the lens can be determined. If the structure height of a lens is too large for a desired application, the lenses can also be replaced by corresponding Fresnel lenses, as described for Fresnel mirrors in connection with Fig. 5. Here too, it is important to ensure that the zone widths of the Fresnel zones are large compared to the light wavelength, but otherwise can be chosen arbitrarily.

In the exemplary embodiments described so far, each light spot of the light-spot image is assigned exactly one optical element which produces this light spot when illuminated, that is to say a concave mirror 24 (Fig. 2), a convex mirror 26 (Fig. 3), a converging lens 92 or a diverging lens 96 (Fig. 7). However, with such a configuration, the resolution that can be achieved in the light-spot image, i.e., the minimum distance between two light spots in the light-spot image, is limited to the diameter d of the convex mirrors or lenses. This diameter is in turn coupled to the floating height of the light spots via the above-mentioned relationship for a three-dimensional image impression $f/d < 5$. A high resolution in the light-spot image can therefore only be achieved for low floating heights and thus a low three-dimensional effect.



**Giesecke+Devrient GmbH,
Giesecke+Devrient Currency Technology GmbH,
and Papierfabrik Louisenthal GmbH. - Ex. 1022**

In order to still obtain a higher resolution in the produced light-spot image with an unchanged high floating height, the large mirrors or lenses used in the previous exemplary embodiments are each replaced by a plurality of smaller micromirrors or microprisms, which together have essentially the same optical effect as the original optical element. For the sake of easier naming, micromirrors and microprisms are hereinafter referred to collectively as micro-optical elements.

A plurality of optical elements in the form of micro-optical elements are then assigned to each light spot of the light-spot image. The higher resolution in the light-spot image is achieved by the fact that the micro-optical elements are not distributed next to each other without gaps, but rather at a distance over the surface region. The spaces between the optical elements of a light spot can then be covered by optical elements that are assigned to other light spots. In this way, several groups of micro-optical elements, which are each assigned to different light spots, can be arranged nested within one another in the same surface region.

The minimum distance between two light spots in the light-spot image is then no longer given by the dimensions of the original large mirrors or lenses, but by the much smaller dimensions of the micro-optical elements into which the original mirrors or lenses are broken down.

In addition, when breaking down a convex mirror or a curved lens into a plurality of micro-optical elements, the surfaces of the micro-optical elements, which in principle are also initially curved, can generally be replaced by flat surfaces because of their small size. This replacement has no adverse effects on the light-spot image produced, particularly if the dimensions of the micro-optical elements are smaller than the resolution of the viewing situation. The advantage is that micro-optic elements with flat surfaces are easier to calculate and produce. From this point of view, it may even be advisable to break down convex mirrors or lenses into small micro-optical elements with flat surfaces if nesting several groups of micro-optical elements is not desired or necessary.

To illustrate, Fig. 8 shows four exemplary embodiments in (a) to (d), in which a curved concave mirror is broken down into micro-optical elements 100 with a square base and a flat mirror surface. In the exemplary embodiment of Fig. 8(a), a concave mirror for producing a light spot is replaced by an arrangement of n × n micromirrors 100, which are arranged next to one another without any distance between them in the surface of the security element. Micromirrors 100, for example, have a dimension of 50 µm × 50 µm and can be formed with a flat mirror surface without affecting the imaging quality. The number n × n of micromirrors is, for example, 10 × 10, so that the micromirrors cover a total area of 0.5 mm × 0.5 mm. The calculation of the



**Giesecke+Devrient GmbH,
Giesecke+Devrient Currency Technology GmbH,
and Papierfabrik Louisenthal GmbH. - Ex. 1022**

orientation of the flat mirror surfaces is explained below with reference to Fig. 10. As can be seen by those skilled in the art, the calculation and production of flat micromirrors 100 is significantly simpler than the calculation and production of a curved concave mirror with the same optical effect.

The exemplary embodiment of Fig. 8(b) shows a configuration in which a curved concave mirror is initially replaced by a plurality of micromirrors 102 with a flat mirror surface, as in Fig. 8(a). However, micromirrors 102 are arranged in a checkerboard-like manner in the surface region of the security element, so that every second mirror position remains free. These initially uncovered fields 104, shown white in the figure, can then be covered with micromirrors that are assigned to a different light spot.

The resolution of the light-spot image can be significantly increased by nesting micromirror groups in this way: For example, if two light spots floating at a height of 5 mm are only to be 0.2 mm next to each other, convex mirrors or lenses with a focal length f = 5 mm are required. As described above, the diameter and focal length of the optical elements must satisfy the relationship f/d < 5 for a three-dimensional effect, which results in an optical diameter d > 1 mm given the specifications. Curved mirrors or lenses lying next to each other would therefore have to be separated by more than 1 mm, so that the required resolution of 0.2 mm cannot be achieved in this way.

If, on the other hand, a break-down as in Fig. 8(b) is used, in which only every other field is used with 50 µm × 50 µm micromirrors 102 to produce the first light spot, the fields 104 in between can be covered with micromirrors producing a second light spot 0.2 mm next to it. The relationship f/d < 5 requires an optical diameter of more than 1 mm, which can be achieved, for example, by a checkerboard-like arrangement of 12 × 12 micromirrors 102 with 12 × 12 free fields 104 and thus d = 2*12*50 µm = 1.2 mm. The minimum distance between the light spot produced by the micromirror group 102 and the second light spot produced by the micromirrors arranged in fields 104 is now 50 µm, so that the required resolution of 0.2 mm can readily be achieved.

Covering of a checkerboard-like arrangement according to Fig. 8(b) with micromirrors is illustrated again in a sectional view in Fig. 9. Referring to Fig. 9(a), every second field is covered with 50 µm × 50 µm micromirrors 102 to produce first light spot 110. Micromirrors 102 form a group of micromirrors, which are all assigned to the same light spot 110 and produce it together when illuminated.



**Giesecke+Devrient GmbH,
Giesecke+Devrient Currency Technology GmbH,
and Papierfabrik Louisenthal GmbH. - Ex. 1022**

Fields 104 between micromirrors 102 are available for coverage with micromirrors that are assigned to other light spots. In an extreme case, fields 104 can be covered with micromirrors 106, which serve to produce a light spot 112 that is only one micromirror diameter $d_m$, i.e., 50 µm in the exemplary embodiment, away from first light spot 110, as illustrated in Fig. 9(b).

As can be seen from Fig. 9, the optical diameter d of micromirror groups 102, 106 in the alternating mirror arrangement is given by $d = 2*n*d_m$, where n represents the number of micromirrors in a group in a spatial direction. By choosing n appropriately, the optical diameter d can always be made large enough to meet the relationship $f/d < 5$, despite the high resolution $d_m$.

Returning to the illustration in Fig. 8, it shall be understood that the coverage of the surface region of the security element can be selected depending on the desired number of groups of micro-optical elements to be nested. For example, only every fourth field can be covered with micromirrors 102 that are assigned to a specific light spot, as illustrated in Fig. 8(c). The initially still free fields 104 shown in white in the figure can then be covered with micromirrors that are assigned to up to three other light spots. In a further configuration, every ninth field is covered by micromirrors 102 assigned to a specific light spot, as shown in Fig. 8(d). The initially still free fields 104 shown in white in the figure can then be covered with micromirrors that are assigned to up to eight other light spots.

The calculation of the flat mirror surfaces of the micromirrors is illustrated in Fig. 10. Shown in cross section are some of micromirrors 102 and free fields 104 lying between them of a configuration according to Figs. 8(b) and 9(a).

For the calculation, $(x_0, y_0, z_0)$ denotes the position of light spot 110 to be produced with $z_0 > 0$, (x, y, 0) denotes the position of the mirror element to be calculated. $\vec{n}$ is the normal vector of the mirror at position (x, y, 0), $\vec{k}$ is the direction vector of the incident light ray and $\vec{p}$ is the direction vector of the reflected light ray.

The position of the mirror surfaces, i.e., the normal vector $\vec{n}$, is to be determined in such a way that the light incident from a specified direction $\vec{k}$ is reflected onto the focal point $(x_0, y_0, z_0)$ for all micromirrors 102 assigned to light spot 110. According to the invention, this is achieved by



**Giesecke+Devrient GmbH,
Giesecke+Devrient Currency Technology GmbH,
and Papierfabrik Louisenthal GmbH. - Ex. 1022**

$$\vec{n} = \frac{\frac{\vec{p}}{|\vec{p}|} - \frac{\vec{k}}{|\vec{k}|}}{\left|\frac{\vec{p}}{|\vec{p}|} - \frac{\vec{k}}{|\vec{k}|}\right|} \quad , \quad \vec{p} = \begin{pmatrix} x_0 - x \\ y_0 - y \\ z_0 \end{pmatrix} \quad , \quad |\vec{p}| = \sqrt{(x_0 - x)^2 + (y_0 - y)^2 + z_0{}^2}$$

If the light source 120 is at the position ($x_L$, $y_L$, $z_L$), then

$$\frac{\vec{k}}{|\vec{k}|} = \frac{\begin{pmatrix} x_L - x \\ y_L - y \\ z_L \end{pmatrix}}{\sqrt{(x_L - x)^2 + (y_L - y)^2 + z_L{}^2}}$$

If the micromirror group 102 is designed for vertical incidence of light, then

$$\frac{\vec{k}}{|\vec{k}|} = \begin{pmatrix} 0 \\ 0 \\ -1 \end{pmatrix} \quad ,$$

resulting in the normal vector n→

$$\vec{n} = \frac{\frac{\vec{p}_n}{|\vec{p}_n|} - \frac{\vec{k}}{|\vec{k}|}}{\left|\frac{\vec{p}}{|\vec{p}|} - \frac{\vec{k}}{|\vec{k}|}\right|} = \frac{\begin{pmatrix} x_0 - x \\ y_0 - y \\ z_0 + \sqrt{\ } \end{pmatrix}}{\sqrt{(x_0 - x)^2 + (y_0 - y)^2 + (z_0 + \sqrt{\ })^2}} \quad ,$$

wherein the abbreviation

$$\sqrt{\ } = \sqrt{(x_0 - x)^2 + (y_0 - y)^2 + z_0{}^2}$$

was used.

In an analogous manner, the normal vector n→ can be calculated for micromirrors whose focal point ($x_0$, $y_0$, $z_0$) with $z_0 < 0$ lies below the plane of the security element. According to the invention, the following relationship is used



**Giesecke+Devrient GmbH,
Giesecke+Devrient Currency Technology GmbH,
and Papierfabrik Louisenthal GmbH. - Ex. 1022**

$$\vec{n} = -\frac{\frac{\vec{p}}{|\vec{p}|} + \frac{\vec{k}}{|\vec{k}|}}{\left|\frac{\vec{p}}{|\vec{p}|} + \frac{\vec{k}}{|\vec{k}|}\right|}$$

and the further calculation is carried out as with concave mirrors.

When broken down into micro-optical elements, curved lenses can be recreated using small microprisms, which, if the size of the microprisms is below the resolution of the viewing situation, can be used with the same optical effect, but are easier to calculate and manufacture.

In Fig. 11, some microprisms 122 are shown in cross section for illustration in a checkerboard-like dissection as in Fig. 8(b). Analogous to the procedure for micromirrors 102, the normal vector $\vec{n}$ can also be calculated for microprisms 122 in such a way that the light incident from light source 120 is refracted to the desired position of light spot 110. Fields 124 that remain free in Fig. 11 can be covered with microprisms that are assigned to a different light spot.

In all variants described, the refractive and/or reflective optical elements could also be embedded in a surrounding material or provided with a protective layer. Such embedding protects the optical elements from contamination and abrasion on the one hand and, on the other hand, effectively prevents unauthorized reproduction by imprinting the surface structure.

Said embedding is shown schematically in Fig. 12 for a security element 130 with micromirrors 132. By embedding micromirrors 132 in transparent protective layer 134 and the resulting jump in the refractive index on surface 136 of protective layer 134, the position of produced light spots 140 changes compared to light spot position 142 in the case of a non-embedded micromirror arrangement. Specifically, when micromirrors 132 are embedded in a protective layer with refractive index n, the floating height of a light spot 140 produced by micromirrors 132 changes by approximately a factor of 1/n. Usual protective lacquer layers 134 have a refractive index of approximately n = 1.5, so that the floating heights of the light spots are reduced by approximately 2/3 compared to the floating heights calculated for an open application. Of course, this change is usually taken into account when designing the micromirror arrangement so that the desired floating heights are achieved after embedding.



**Giesecke+Devrient GmbH,
Giesecke+Devrient Currency Technology GmbH,
and Papierfabrik Louisenthal GmbH. - Ex. 1022**

With embedded prisms or lenses, the difference in refractive index between prism and lens material and embedding material must be taken into account accordingly when calculating the light ray deflection.

In order to create a visually appealing three-dimensional light-spot image, the light spots should be able to have different brightnesses. Such different brightnesses of light spots can be produced in various ways within the scope of the invention. For example, the optical elements that are assigned to a light spot can be darkened depending on the desired fraction of maximum brightness.

However, it is currently preferred to adjust the brightness of a light spot after breaking it down into micro-optical elements via the area portion that is covered by micro-optic elements or via the number of fields that are responsible for a light spot per solid angle. This results in image areas that do not contain any mirrors or prisms directed at a spot of light and which must be kept dark.

Such image regions can be produced, for example, in one of the following ways. In a first variant, the darker areas in the reflective light-spot image are provided with light traps, for example with subwavelength structures, such as moth eye structures, or with funnel-shaped, reflective structures with steep sides in which incident light is reflected back little or not at all. However, because of the steep sides, such light traps are not easy to produce. It is therefore advisable to equip the dark areas in the reflective light-spot image with mirrors that are oriented in such a way that spatial regions that do not contain any light sources are reflected. For this purpose, the mirrors can be directed, for example, at the viewer's body.

In the case of see-through security elements, the dark areas are preferably equipped with prisms that direct light rays to the viewer's eye from directions in which there are no light sources, for example from the floor.

The surface region in which the optical elements are arranged does not have to be flat, but can be curved in any way. This is particularly easy if the optical elements are formed by small micro-optical elements. Since a normal vector is calculated for each micro-optic element anyway (Fig. 10, Fig. 11), the local position and orientation of the surface of the security element can be taken into account without much additional effort, as explained below using the example of a micromirror arrangement:



**Giesecke+Devrient GmbH,
Giesecke+Devrient Currency Technology GmbH,
and Papierfabrik Louisenthal GmbH. - Ex. 1022**

If, as above ($x_0$, $y_0$, $z_0$) denotes the position of the desired light spot, (x, y, z) the position of a micromirror in space, this position including the curved surface of the security element, further $\vec{n}$ denotes the normal vector of the micromirror at position (x, y, z), $\vec{k}$ the direction vector of the incident light ray, and $\vec{p}$ the direction vector from the micromirror to the light spot, then, according to the invention

$$\vec{n} = \pm \frac{\frac{\vec{p}}{|\vec{p}|} \mp \frac{\vec{k}}{|\vec{k}|}}{\left| \frac{\vec{p}}{|\vec{p}|} \mp \frac{\vec{k}}{|\vec{k}|} \right|} \quad , \quad \vec{p} = \begin{pmatrix} x_0 - x \\ y_0 - y \\ z_0 - z \end{pmatrix} \quad , \quad |\vec{p}| = \sqrt{(x_0 - x)^2 + (y_0 - y)^2 + (z_0 - z)^2}$$

Wherein the upper sign applies to $z_0 > 0$, i.e., a real image floating above the substrate plane, and the lower sign applies to $z_0 < 0$, i.e., a virtual image floating below the substrate plane.

In a further development of the invention, the security element can also produce a changing light-spot image when illuminated, in which different images become visible to the viewer from different directions. For example, the procedure for a reflective security element can be as follows; the procedure for a see-through security element is analogous:

When tilted to the side, the security element should show an image change from a light-spot image A to a light-spot image B. First, the required optical elements that produce the light-spot images when illuminated are determined for both light-spot images. As described in connection with Figs. 8 to 10, each light spot is assigned a plurality of optical elements, here a plurality of micromirrors.

When arranging the micromirrors in the surface region of the security element, those micromirrors in which the x component $n_x$ of the normal vector is greater than zero are then omitted for the light-spot image A. This frees up half of the mirror space and the image is only visible in a limited angle range.

For the light-spot image B, those micromirrors are omitted where the x component $n_x$ of the normal vector is less than zero. With this reduced mirror arrangement, the freed up mirror positions of the light-spot image A are covered. When the arrangement is tilted sideways, the light-spot image A and the light-spot image B alternately become visible.



**Giesecke+Devrient GmbH,
Giesecke+Devrient Currency Technology GmbH,
and Papierfabrik Louisenthal GmbH. - Ex. 1022**

The security element can also be designed for vertical tilting, for example by omitting those micromirrors for the light-spot image A for which the y-component of the normal vector $n_y$ is greater than zero, and for the light-spot image B the micromirrors for which $n_y < 0$. The reduced mirror arrangements with their limited visibility range are then mixed on the surface region of the security element.

Instead of the conditions mentioned, other criteria can of course also be used to separate the light-spot images of a changing image. For example, the conditions

$$n_y > c_1 \text{ for image A, } c_1 < n_y < c_2 \text{ for image B, } n_y < c_2 \text{ for image C}$$

with two numerical values $c_1 < c_2$ allow three light-spot images A, B, C to change when tilted vertically. By choosing the numerical values $c_1$ and $c_2$, the size of the visibility range can be set as desired.

In addition to changing between several 3D light-spot images, a change between one or more 3D light-spot images and one or more images produced in another way is also possible.

It may also be advisable to combine a three-dimensional motif with a two-dimensional motif in the light-spot image, in which all image points are at the same height, preferably at the height of the level of the security element, or after the plane of the security element. Such two-dimensional light spot motifs can still be easily recognized even under poor illumination conditions. For example, if a two-dimensional foreground motif is combined with a three-dimensional background motif, the light-spot image does not disappear completely, even in poor illumination conditions, but is simply reduced to the more robust two-dimensional foreground motif. An authenticity check is therefore still possible even in poor illumination conditions.

In addition to floating 3D light spots that are visible from certain viewing angles, a light-spot image can also contain 2-dimensional-appearing regions that are visible from the same or different viewing angles. The 2D and 3D areas can therefore lie next to each other and/or appear alternately in the same place when the viewing direction is changed.

In 2D-3D images, in addition to 3-dimensional-looking areas (which can be seen in front of or behind the plane of the security element or appear to penetrate the plane of the security element), there are also 2-dimensional-looking areas at the level of the plane of the security



**Giesecke+Devrient GmbH,
Giesecke+Devrient Currency Technology GmbH,
and Papierfabrik Louisenthal GmbH. - Ex. 1022**

element or close to the plane of the security element (at altitude level 0 or close to altitude level 0).

For an area at zero height, the mirror or prism covering that is calculated for light points at low heights (e.g., height 0.5 mm) with the desired viewing angle range can be used as a basis. All normal vectors that serve the intended solid angle are included here. While for floating light points the micromirrors or microprisms in the plane of the security element are sorted so that certain points in space are served, the micromirrors calculated in this way, including their inclination, must be statistically distributed in the region intended for height 0. Then no specific points in space are illuminated, but rather a solid angle is served as desired. For smaller intensities, this statistically mixed area must be configured to contain gaps, e.g., not all pixels are covered or the pixels are not fully covered.

According to another refinement, the light-spot image has hidden piece of image information (Hidden Image) in addition to the openly visible piece of image information. For this purpose, the optical elements of the open piece of image information are arranged at a distance and the gaps are at least partially covered with optical elements of the hidden piece of image information.

A hidden piece of image information can be produced, for example, by assigning very small opening angles to the associated light spots, such as an opening angle = 0 for parallel light.

The light spots of the hidden piece of image information can also be assigned different directions, which are so far apart that no coherent image is captured when viewed without aids. To check its authenticity, the image can be captured on a matt screen. The directions of the hidden piece of image information are preferably outside the directions from which the open 3D light-spot image is viewed, so the presence of a hidden piece of information is not readily apparent.

In an advantageous configuration, the optical elements of the hidden piece of image information are partially or completely accommodated in closely adjacent subregions of the security element and, if necessary, repeated several times over the surface of the security element. The hidden piece of image information can then be captured successively or as a whole by illuminating it with a narrow laser beam and projected onto a suitably placed screen.

A particularly preferred procedure for producing a general three-dimensional light-spot image is described in more detail below.



**Giesecke+Devrient GmbH,
Giesecke+Devrient Currency Technology GmbH,
and Papierfabrik Louisenthal GmbH. - Ex. 1022**

First, a desired three-dimensional motif with image points $P_j$ and height values $Z_j$ is defined above the xy plane, with image points corresponding to the light spots created by illumination. For a normal viewing distance of around 30 cm, the image point spacing should be in the range of 0.1 to 0.5 mm. Furthermore, the image points $P_j$ are assigned a brightness $I_j$ between 0% and 100%. Then the image points are assigned aperture cones that have an aperture ratio > 0.2, for example an aperture ratio of 0.4. For each pixel Pj, the intersection of the opening cone emanating from the image point with the xy plane defines a catchment region Ej to the image point Pj.

The xy plane itself is divided into first, larger fields, for example with dimensions of 0.1 mm × 0.1 mm. Each of the larger fields is further divided into second, smaller fields, for example a size of 10 µm × 10 µm. The larger fields are referred to below as coarse fields, the smaller fields as fine fields.

In the catchment area $E_j$ of each image point $P_j$, as many fine fields are now reserved for this image point as are determined based on the height value $Z_j$ and the brightness value $I_j$. For example, the number of fine fields can be chosen to be proportional to the brightness value and inversely proportional to $(Zj)^{\alpha}$ with an exponent α 1, which is α = 1 for light spots formed by trough-shaped mirrors or cylindrical lenses, and α = 2 for light spots formed by two-dimensionally focusing lenses or mirrors. The fine fields reserved for the image point $P_j$ are then essentially evenly distributed among the coarse fields in the catchment area $E_j$ of the pixel $P_j$.

A correction factor can also be included in the number of fine fields per coarse field, which is determined, for example, as follows: First, without a correction factor, the number of fine fields to be covered within each coarse field, which belong to different image points $P_j$, are added. This results in a coverage suggestion for the number of fine fields covered in total in each coarse field.

If the number of covered fine fields for all coarse fields is less than the maximum possible number, a correction factor greater than 1 can be chosen and the coverage can be multiplied by this correction factor so that the maximum coverage is achieved in some coarse fields. On the other hand, if the number of covered fine fields exceeds the maximum coverage, a correction factor smaller than 1 is chosen, which, after multiplication, leads to a coverage less than or equal to the maximum coverage. If the maximum coverage is exceeded in just a few coarse fields, instead of a uniform reduction, only the highest intensities can be capped to the



**Giesecke+Devrient GmbH,
Giesecke+Devrient Currency Technology GmbH,
and Papierfabrik Louisenthal GmbH. - Ex. 1022**

maximum coverage or the fine fields of the exceeding coarse fields are moved to adjacent coarse fields.

The coverage obtained in this way can now be implemented in the surface region of the security element. Mirrors or prisms are arranged in the covered fine fields, which reflect or refract the incident light onto the corresponding light spot. Additional security elements can be introduced into surface regions of the security element that remain free; for example, a hidden image of the type described above can be accommodated there.

A light spot image according to the invention can also serve as a master for a volume hologram as illustrated now by three configurations with reference to Fig. 13.

In the exemplary embodiment of Fig. 13(a) depiction arrangement 140 serves as master, which has a reflective 3D light spot image with micromirrors, which is calculated for vertical incidence of light. A photopolymer plate 142 serves as recording plate for the volume hologram. Photopolymer plate 142 is arranged in front of display arrangement 140, so that the laser radiation of recording laser 144, after the beam expansion 146, is incident perpendicularly onto photopolymer plate 142 as reference wave 148. A portion of the laser radiation transilluminates through photopolymer plate 142, is incident perpendicular to depiction arrangement 140 and forms the object wave after reflection at depiction arrangement 140, which interferes with reference wave 148 in photopolymer plate 142. Thus, Bragg gratings are imprinted into photopolymer plate 142 which, as volume grid image, shows the same 3D image as the 3D light spot image of the depiction arrangement 140, which serves as a master.

In the variation of Fig. 13(b), depiction arrangement 140 serving as a master contains a reflective 3D light spot image that is calculated for light incidence under one certain angle to vertical. Accordingly, depiction arrangement 140 and photopolymer plate 142 arranged in front of the depiction arrangement are exposed to laser radiation under this angle. Through interference of reference wave 148 and the object wave reflected from the depiction arrangement following transillumination of photopolymer plate 142, a volume grid image is generated in photopolymer plate 142, which shows the same 3D image as the 3D light spot image of the depiction arrangement 140, which serves as a master.

Finally, in exemplary embodiment of Fig. 13(c), a depiction arrangement 140 with a refracting 3D light spot image with microprisms which is calculated for vertical incidence of light, serves as master. Here, the depiction arrangement 140 and photopolymer plate 142 arranged in front of



**Giesecke+Devrient GmbH,
Giesecke+Devrient Currency Technology GmbH,
and Papierfabrik Louisenthal GmbH. - Ex. 1022**

the depiction are exposed to laser radiation by means of a beam splitter 150 and deflection mirror 152 from opposite sides. In photopolymer plate 142, reference wave 148 and the object wave that is refracted by depiction arrangement 142 interfere and thus generate a volume grid image, which shows the same 3D image as the 3D light spot image of the depiction arrangement 140, which serves as a master.



Giesecke+Devrient GmbH,
Giesecke+Devrient Currency Technology GmbH,
and Papierfabrik Louisenthal GmbH. - Ex. 1022

## Claims

1. A depiction element having a substrate with a surface region in which a plurality of optical elements are arranged, **characterized in that** the depiction element is designed and intended to produce, upon illumination, a light-spot image composed of a plurality of light spots that for an viewer appear floating above or below the surface region and that are arranged in the form of a specified motif, the optical elements being formed by refractive and/or reflective optical elements and there being assigned to every light spot of the light-spot image at least one refractive and/or reflective optical element that, upon illumination of the depiction element, contributes to producing the light spot assigned to it.

2. The depiction element according to claim 1, **characterized in that,** for the light spots and the assigned optical elements, in each case, $f/d < 5$, where f is the floating height of the light spot above or below the surface region, and d is the diameter of the optical elements that contribute to said light spot.

3. The depiction element according to claim 1 or 2, **characterized in that** the light spots of the light-spot image float at multiple different floating heights above or below the surface region to form a three-dimensional motif.

4. The depiction element according to claim 1 or 2, **characterized in that** the light spots of the light-spot image, in some regions, all float at the same floating height above or below the surface region to form a backdrop motif.

5. The depiction element according to claim 1 to 4, **characterized in that** the optical elements comprise curved mirrors, especially concave mirrors or convex mirrors.

6. The depiction element according to claim 5, characterized in that the curved mirrors are designed to be spherical, elliptical, rotation-symmetrically aspherical, non-rotation-symmetrically aspherical or trough-shaped, in the latter case, the troughs running rectilinearly or curvilinearly.

7. The depiction element according to claim 5 or 6, **characterized in that** the curved mirrors are formed at least in part by Fresnel mirrors.



**Giesecke+Devrient GmbH,
Giesecke+Devrient Currency Technology GmbH,
and Papierfabrik Louisenthal GmbH. - Ex. 1022**

8. The depiction element according to at least any one of clams 1 to 7, **characterized in that** the optical elements comprise lenses, especially spherical, elliptical, rotation-symmetrically aspherical, non-rotation-symmetrically aspherical or cylindrical lenses.

9. The depiction element according to claim 8, characterized in that the lenses are formed at least in part by Fresnel lenses.

10. The depiction element according to at least one of claims 1 to 9, characterized in that exactly one optical element is assigned to every light spot of the light-spot image.

11. The depiction element according to at least one of claims 1 to 9, **characterized in that** a plurality of optical elements is assigned to every light spot of the light-spot image, preferably in that the optical elements are distributed spaced apart on the surface region.

12. The depiction element according to claim 11, **characterized in that** the light spots of the light-spot image have different brightnesses and to every light spot is assigned such a number of optical elements as corresponds to the brightness of the light spot within the motif formed by the light spots, or to every light spot is assigned such a total area of optical elements as corresponds to the brightness of the light spot within the motif formed by the light spots.

13. The depiction element according to claim 11 or 12, **characterized in that** optical elements which are assigned to different light spots are arranged nested in the surface region.

14. The depiction element according to at least one of claims 11 to 13, **characterized in that** the optical elements are formed by flat micromirrors or by small microprisms.

15. The depiction element according to at least one of claims 1 to 14, **characterized in that** the specified motif is a changing image that from different viewing directions displays different images.

16. The depiction element according to at least one of claims 1 to 15, **characterized in that** the surface region in which the plurality of optical elements is arranged is curved.

17. The depiction element according to at least one of claims 1 to 16, **characterized in that** a subset of the optical elements produces a hidden piece of image information that is not perceptible without auxiliary means.



**Giesecke+Devrient GmbH,
Giesecke+Devrient Currency Technology GmbH,
and Papierfabrik Louisenthal GmbH. - Ex. 1022**

18. The depiction element according to at least one of claims 1 to 17, **characterized in that** the optical elements comprise a periodic arrangement of micromirrors that each have a distance of 2 mm or less to their nearest neighbor.

19. The depiction element according to at least one of claims 1 to 18, **characterized in that** the optical elements are embedded in a surrounding layer or a surrounding layer composite, especially in a protective layer.

20. The depiction element according to at least one of claims 1 to 19, **characterized in that** the optical elements are designed as embossing structures in an embossing lacquer layer.

21. The depiction element according to claim 20, **characterized in that** the embossing structures are furnished with a reflection-increasing coating, especially with a metallization, a high-index coating, a thin-film element having a color-shift effect, or a cholesteric liquid crystal layer.

22. The depiction element according to claim 20 or 21, **characterized in that** the embossing structures have structure heights of less than 100 µm, preferably of less than 20 µm, particularly preferably of less than 5 µm.

23. The depiction element according to at least one of claims 1 to 22, **characterized in that** the specified motif is a three-dimensional body formed by the light spots.

24. The depiction element according to at least one of claims 1 to 23, **characterized in that** the depiction element is a security element for security papers, value documents and other objects to be protected, especially a security thread, a security band, a security strip, a label or a transfer element.

25. A method for manufacturing a depiction element according to any one of claims 1 to 24 that is designed and intended to produce, upon illumination, a light-spot image composed of a plurality of light spots that for a viewer appear floating above or below the surface region and that are arranged in the form of a specified motif, there being provided in the method a substrate and there being arranged in a surface region of the substrate a plurality of refractive and/or reflective optical elements, there being assigned to every light spot of the light-spot image at



**Giesecke+Devrient GmbH,
Giesecke+Devrient Currency Technology GmbH,
and Papierfabrik Louisenthal GmbH. - Ex. 1022**

least one refractive and/or reflective optical element that, upon illumination of the depiction element, contributes to producing the light spot assigned to it.

26. The method according to claim 25, **characterized in that**
- a desired three-dimensional motif having image points $P_j$ and height values $Z_j$ above an xy plane is specified, the image points corresponding to the light spots created upon illumination,
- for every image point $P_j$, a brightness $I_j$ between 0% and 100% is defined,
- there are assigned to the image points $P_j$ aperture cones that have an aperture ratio > 0.2,
- for every image point $P_j$, a sphere of influence $E_j$ is determined by an intersection of the aperture cone originating from the image point with the xy plane,
- the xy plane is divided into a number of coarse fields, and the coarse fields are each divided into a number of fine fields,
- for every image point $P_j$, based on the defined height value $Z_j$ and the defined brightness value $I_j$, a number of fine fields to be filled in is determined,
- the fine fields to be filled in determined for the image point $P_j$ are distributed substantially evenly across the coarse fields in the sphere of influence $E_j$ of the image point $P_j$, and
- the fine fields to be filled in are covered with refractive and/or reflective optical elements that, upon illumination of the depiction element, contribute to producing the light spot that corresponds to image point $P_j$.

27. A data carrier having a depiction element according to at least one of claims 1 to 24.

28. The data carrier according to claim 27, **characterized in that** the depiction element is an at least partially see-through security element that is arranged in or over a transparent window region or a through opening in the data carrier.

29. The data carrier according to claim 27, **characterized in that** the depiction element is a reflective security element that is arranged in an opaque region of the data carrier.

30. The data carrier according to at least one of claims 27 to 29, **characterized in that** the data carrier is a value document such as a banknote, in particular a paper banknote, a polymer banknote, or film composite banknote or a certificate, a passport or an identification card.

31. A display device having a control device and a depiction element according to any one of claims 1 to 24, the spatial alignment of the optical elements of the depiction element being adjustable by the control device.



**Giesecke+Devrient GmbH,
Giesecke+Devrient Currency Technology GmbH,
and Papierfabrik Louisenthal GmbH. - Ex. 1022**

32. A method for manufacturing a volume hologram wherein, in a recording disk, unscattered laser radiation as the reference wave and laser radiation reflected and deflected by a depiction element according to any one of claims 1 to 24 as object wave are made to create interference.



Giesecke+Devrient GmbH,
Giesecke+Devrient Currency Technology GmbH,
and Papierfabrik Louisenthal GmbH. - Ex. 1022

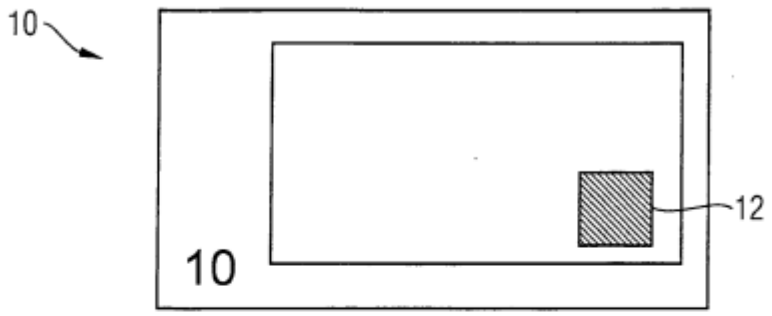


Fig. 1

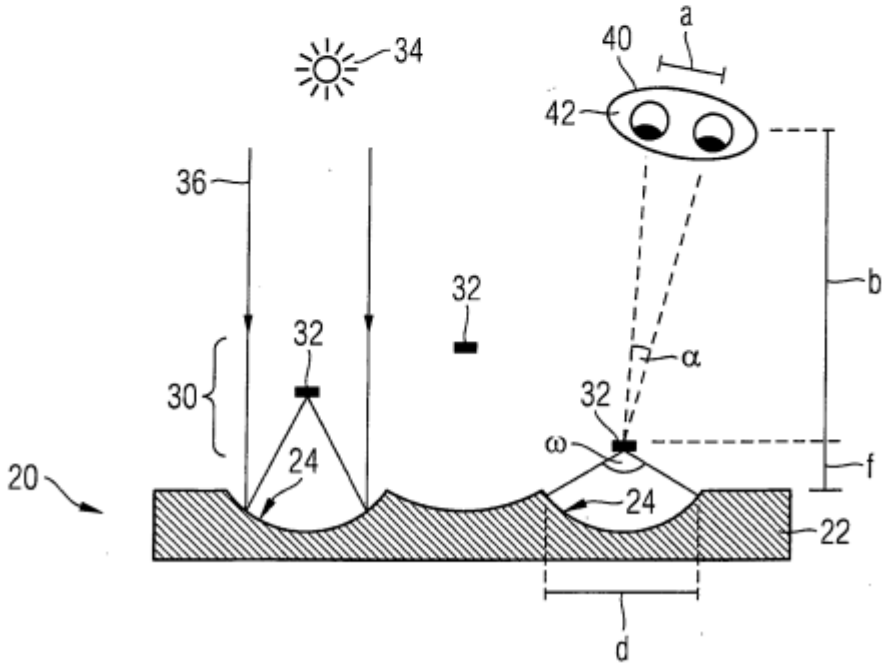


Fig. 2



Giesecke+Devrient GmbH,
Giesecke+Devrient Currency Technology GmbH,
and Papierfabrik Louisenthal GmbH. - Ex. 1022

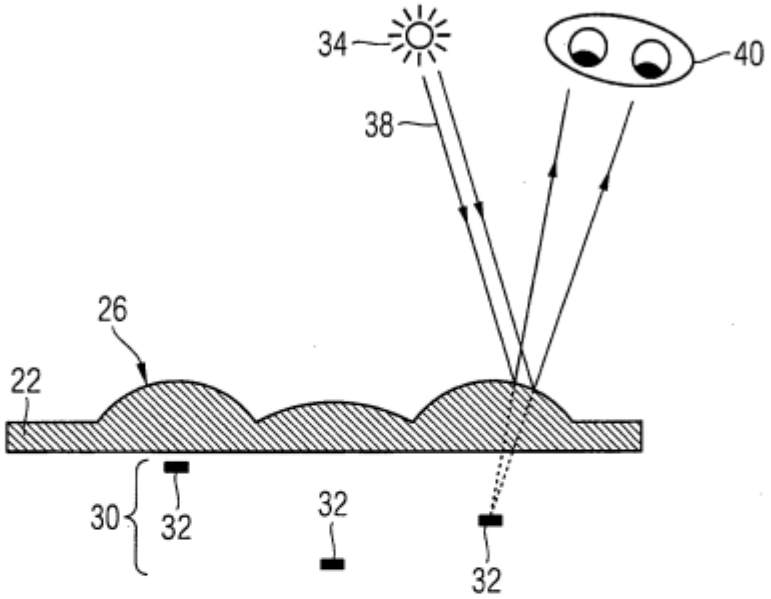


Fig. 3

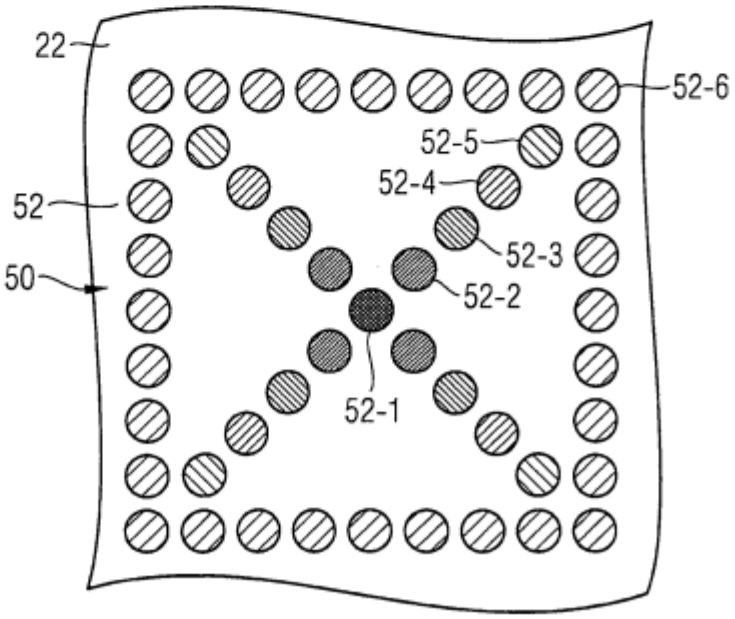


Fig. 4



Giesecke+Devrient GmbH,
Giesecke+Devrient Currency Technology GmbH,
and Papierfabrik Louisenthal GmbH. - Ex. 1022

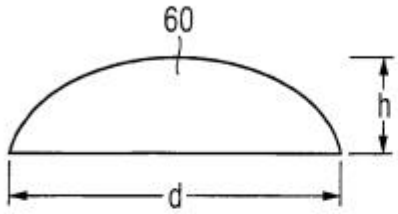


Fig. 5a

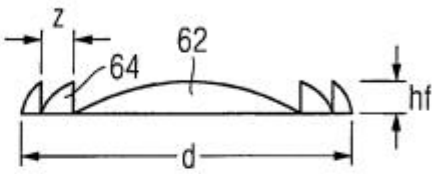


Fig. 5b

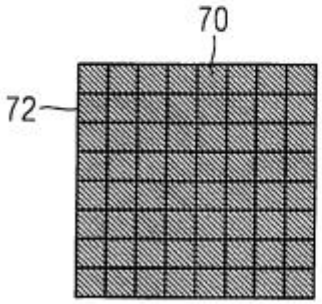


Fig. 6a

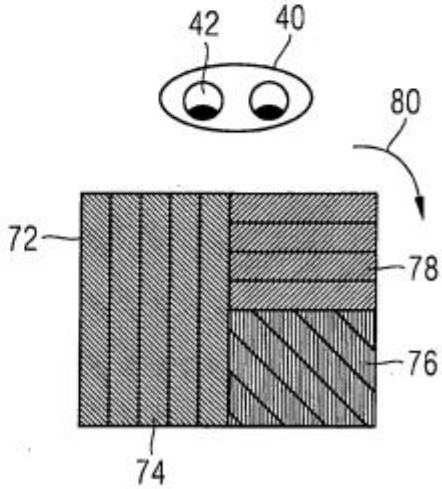


Fig. 6b



Giesecke+Devrient GmbH,
Giesecke+Devrient Currency Technology GmbH,
and Papierfabrik Louisenthal GmbH. - Ex. 1022

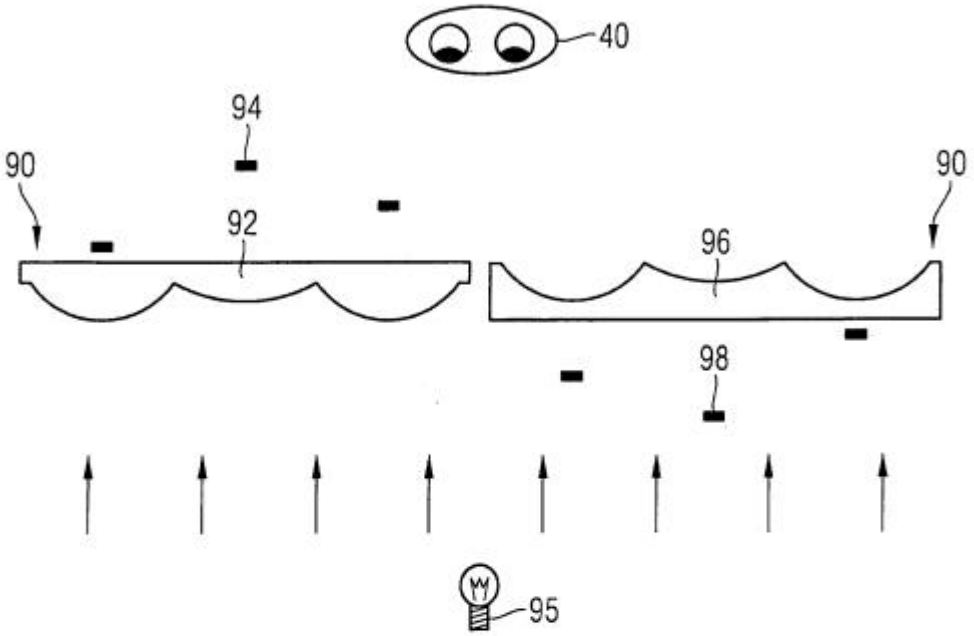


Fig. 7

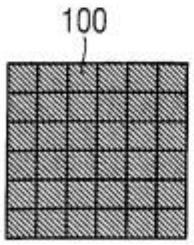


Fig. 8a

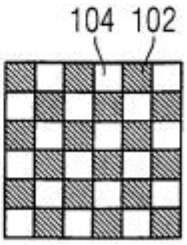


Fig. 8b



Giesecke+Devrient GmbH,
Giesecke+Devrient Currency Technology GmbH,
and Papierfabrik Louisenthal GmbH. - Ex. 1022

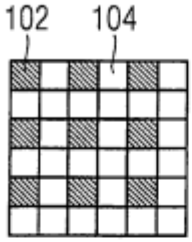


Fig. 8c

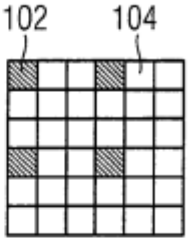


Fig. 8d

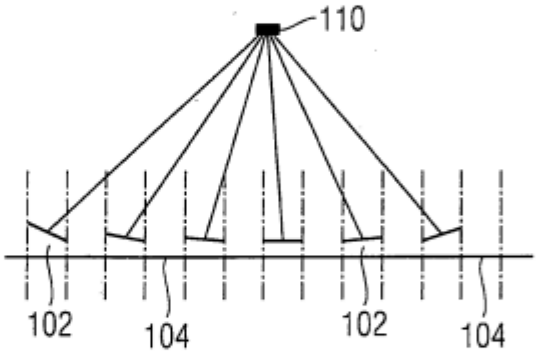


Fig. 9a

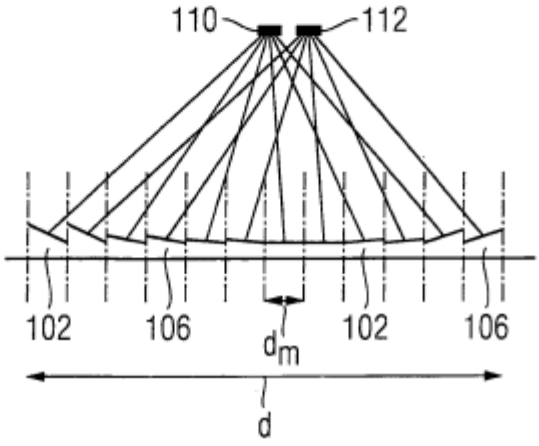


Fig. 9b



Giesecke+Devrient GmbH,
Giesecke+Devrient Currency Technology GmbH,
and Papierfabrik Louisenthal GmbH. - Ex. 1022

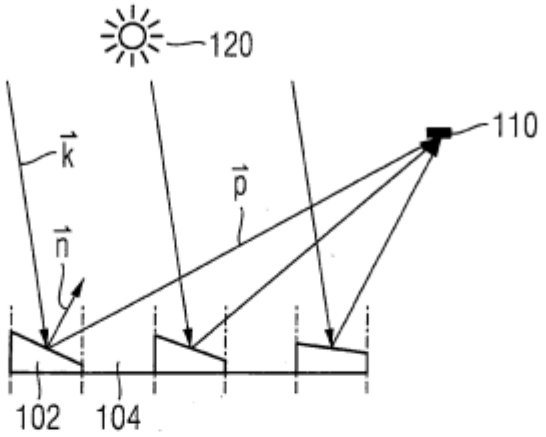


Fig. 10

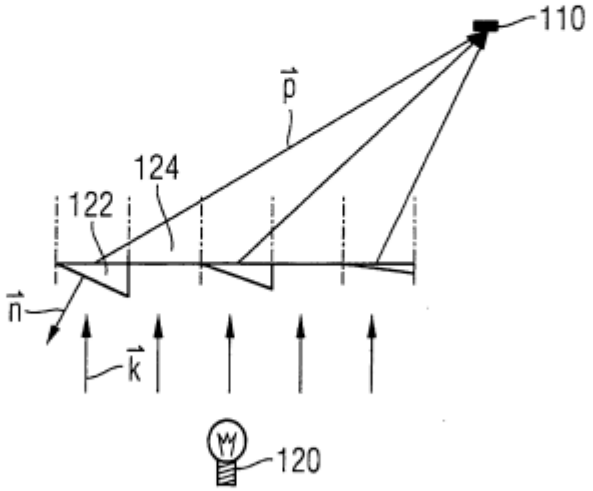


Fig. 11

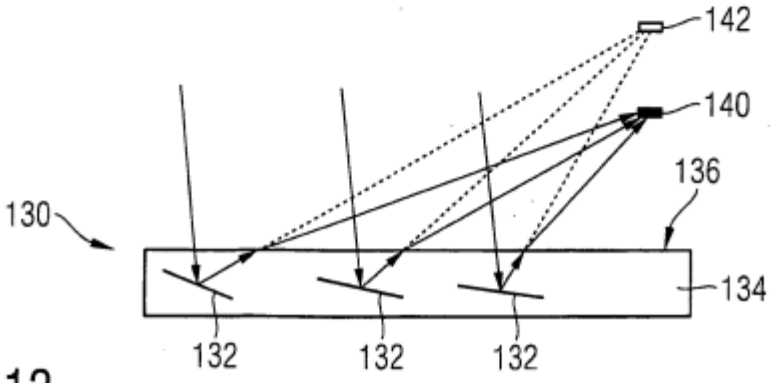


Fig. 12



Giesecke+Devrient GmbH,
Giesecke+Devrient Currency Technology GmbH,
and Papierfabrik Louisenthal GmbH. - Ex. 1022

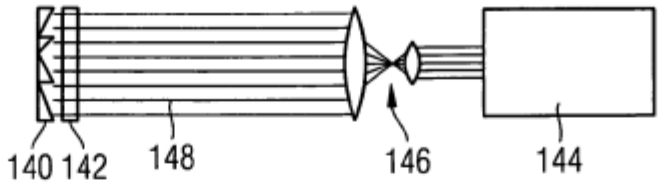


Fig. 13a

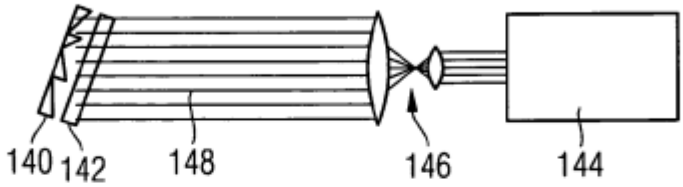


Fig. 13b

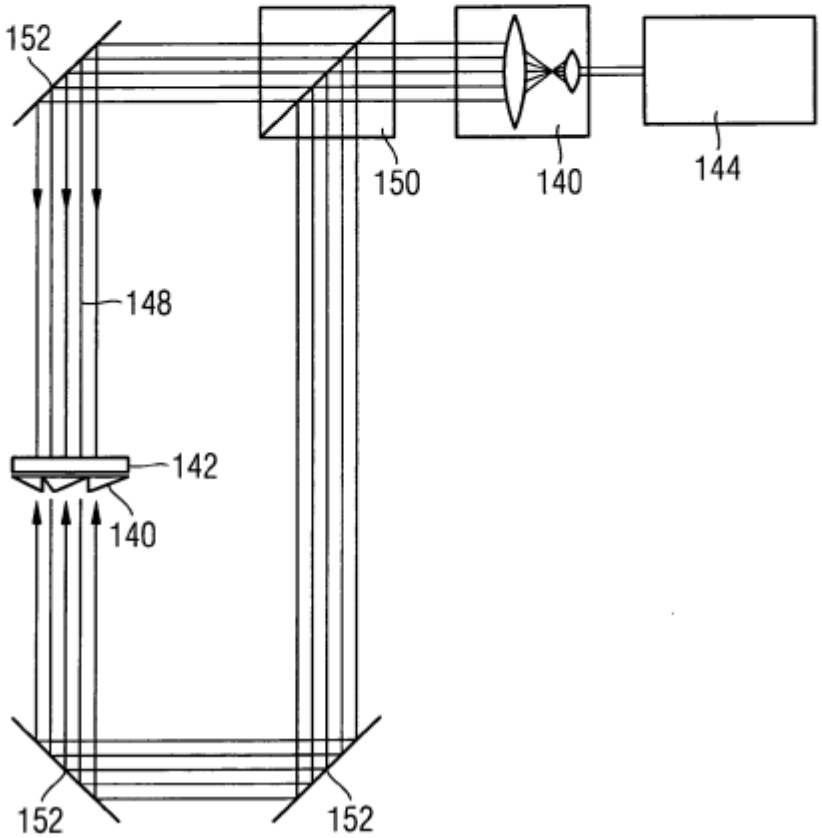


Fig. 13c

ERSATZBLATT (REGEL 26)



Giesecke+Devrient GmbH,
Giesecke+Devrient Currency Technology GmbH,
and Papierfabrik Louisenthal GmbH. - Ex. 1022