ROYAL AUSTRALIAN MINT
and
CSIRO

FINALE COIN IN THE AUSTRALIAN CENTENARY OF FEDERATION PROGRAM FEATURING AN OPTICALLY VARIABLE DEVICE

PRESENTERS

Dr. Patrick W. Leech
and
Mr. Bruce Valentine

Authors: Bruce Valentine[*], Patrick Leech[#], Brett Sexton[#], Russell Marnock[#] and Fiona Smith[#],
[*]Royal Australian Mint, Denison St., Deakin, ACT, 2600, Australia
[#]CSIRO Manufacturing Science and Technology, Normanby Rd., Clayton, 3169, Victoria, Australia.

Giesecke+Devrient GmbH,
Giesecke+Devrient Currency Technology GmbH,
and Papierfabrik Louisenthal GmbH. - Ex. 1031

PART 1
THE OPTICALLY VARIABLE DEVICE

1.1 Introduction:

The use of holograms in coins has become a new area of numismatic development with a number of recent issues in silver and in gold. The holographic image in these coins has been intended primarily to enhance the colour and iridescence of a selected region of the larger design. The incorporation of holograms into coins follows from their widespread use as diffractive elements in metallised foils. For example, holograms embossed into foil have been used in various types of transaction cards to decrease the rate of counterfeiting and fraud.

But the requirement in the security industry for increasingly more complex features than attainable in holograms has led to the development of optically variable devices (OVDs). These devices have been derived from mathematical analyses based on diffraction physics with the aim of creating novel and specific optical effects. Key features of OVDs have included a sharper definition of shapes and a greater brilliance of the image than with holograms and an ability to change the intensity of the image with the viewing angle [1].

One of the most prominent forms of OVD technology has been introduced by the CSIRO as the Australian origination called Exelgram. The prefix "***exel***" was derived from "***ex***posure ***el***ement", a term devised to indicate that the diffraction pattern was written with the high resolution of electron beam equipment. The specialised features of Exelgram OVD images have included a fast switching effect between two different diffractive images, the rotational movement of colour in images and microtext and the integration of diffractive and non-diffractive graphics [2,3]. These effects have been combined in high resolution portraiture and graphic elements. There have been many examples of the commercial use of Exelgram OVDs including the current Hungarian (1997) and New Zealand (2000) banknotes, Amex US and Euro security documents (1997, 1999) and the Australian "opal" stamp (April 1995).

In this paper, we have described the application of the Exelgram OVD origination process to the production of a commemorative coin issued by the Royal Australian Mint. The Finale Coin in the Centenary of Federation Program was issued in November 2001 to commemorate the formation of the Commonwealth of Australia from separate colonies in 1 January 1901. A unique feature of this coin has been the 2-channel switch in the image which is evident by rotation about an axis lying in the plane of the OVD.

1.2. Image Switching in OVDs

When viewed at high magnification, the surface relief structure in Exelgram OVDs are seen to comprise a series of extremely fine diffracting tracks. The information required to construct a picture is encoded into the device by varying the individual groove angles and/ or spatial frequency continuously along each of the tracks. More specifically, the spatial frequency of the grooves was selected from a range of 10 different levels in order to give the corresponding colour in the diffracting image.

When a light beam is incident on such a grating, the periodic structure produces a reinforcement at path differences equal to a whole number of wavelengths, λ. The diffraction angle is determined by the order, m and pitch of the grating, d. The diffraction orders are grouped around the undiffracted light beam called zero order z = 0.For the first order or brightest diffracted beam, the angle θ for intense diffraction is given by the grating relation $\sin\theta = \lambda/d$. Hence, the finer the pitch of the grating, the larger the angle of diffraction at which reinforcement occurs. In the case of two

Giesecke+Devrient GmbH,
Giesecke+Devrient Currency Technology GmbH,
and Papierfabrik Louisenthal GmbH. - Ex. 1031

channel images each with distinctly different spacings, the first order diffraction beams appear at different viewing angles and exhibit distinct colours.

In terms of the fine-scale microstructure of the diffracting tracks, the switching effect results from the different arrangement of groove spacings for the two channels. Fig. 1 show an example of adjacent parallel channels with different groove spacings seen on either side. In Fig.2, a higher magnification view of the tracks or grooves shows the channel interface with coarser structure in the upper part of the image while a finer structure was present below [4]. Also evident in Fig.2 was a change in orientation of the grooves at the interface.

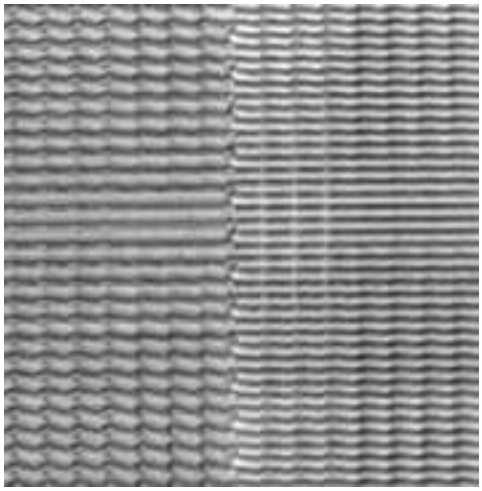

Figure 1. Optical microscope view of the grating structure of an Exelgram OVD image with a change in spatial frequency at the channel boundary.

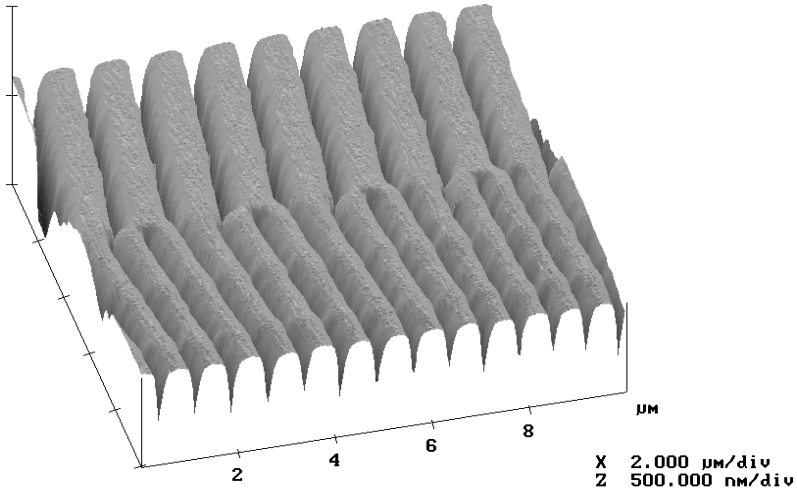

Figure 2. Grating structure of an Exelgram image viewed by Atomic Force Microscopy showing the change in spacing between two switch regions [4].

Giesecke+Devrient GmbH,
Giesecke+Devrient Currency Technology GmbH,
and Papierfabrik Louisenthal GmbH. - Ex. 1031

1.3 Production of the OVD

For the Finale Coin Centenary of Federation Program, the sequence of production of an Exelgram comprised of three stages a) artwork development, b) artwork conversion to Exelgram format and c) fabrication of the master image plate. The elements of design of the OVD were based on a two channel diffractive switch between the outline of the Federation Rotunda and a map of Australia. (Historically, the Rotunda was a central building in Centennial Park Sydney at the Proclamation of Federation in 1901.) Fig. 3 shows the respective artwork designs for the Rotunda and the map. In order to differentiate between these features, a range of diffractive colours was selected for the Rotunda and for each of the Australian States and Territories.

During the design stage, the Exelgram artwork was prepared using a palette developed by CSIRO comprised of 26 different elements. The group of 10 colour elements in the palette was used to define the switch effect in the Exelgram image. Each colour within this 10 element group corresponded to a particular spatial frequency of the tracks in the range of pitch 0.75-1.5 µm. Upon completion of the artwork, the files were converted into an Exelgram format. In addition to conversion of the artwork files into bit pattern data format, they were also merged with separate diffraction palette files. The palette files determined the fine detail of the track microstructure and the spatial frequency of the grooves within each of the 30 x 30 µm sub-fields which comprised the images. In Exelgram format, the files were then transferred directly to the Leica EBMF 10.5 e-beam system.

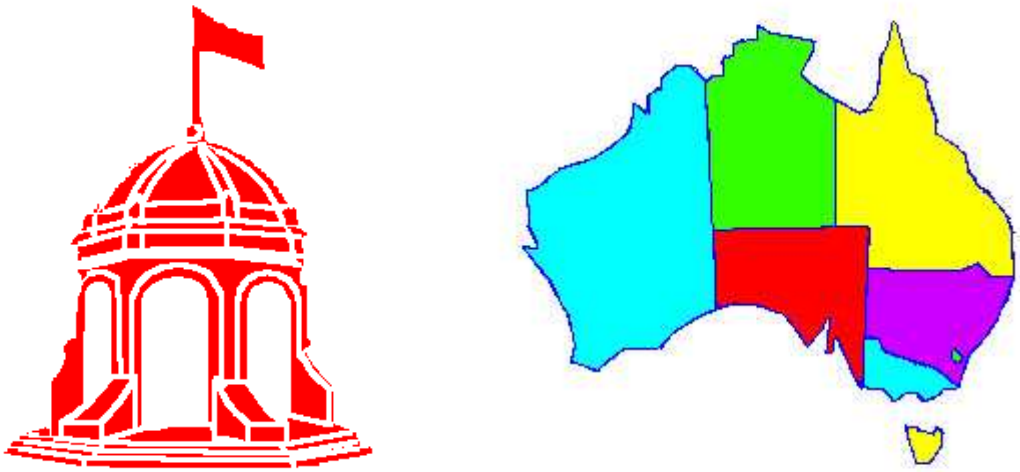

Figure 3. Outline of the Federation Rotunda and map of Australia. These designs formed the two component parts of the switch image for the 2001 Finale Coin in the Centenary of Federation Series.

Electron beam lithography was the final stage in preparation of the OVD image. The master plate used for exposure was comprised of a quartz substrate with a thin layer of Cr overlaid by a layer of

Giesecke+Devrient GmbH,
Giesecke+Devrient Currency Technology GmbH,
and Papierfabrik Louisenthal GmbH. - Ex. 1031

e-beam sensitive EBR-9 resist. The e-beam was systematically exposed across each of the 30 x 30 μm sub-fields within the area of the plate. Following the exposures, the layer of resist was developed in a MIBK:Isopropyl alcohol solution to reveal the fine structure of the grooves.

For the fabrication of the OVD on the Finale coin, an array of 6 x 8 images was configured across the area of a single 12.5 cm plate. This arrangement was intended to maximize the number of perfect quality images attainable within a single exposure run of the e-beam system. A photograph of a selected area of the array images on the plate has been illustrated in Fig.5. The alternate forms of the two channel switch were visible in this Figure with the varying illumination across the plate. An example of a single image has been shown in Fig. 6.

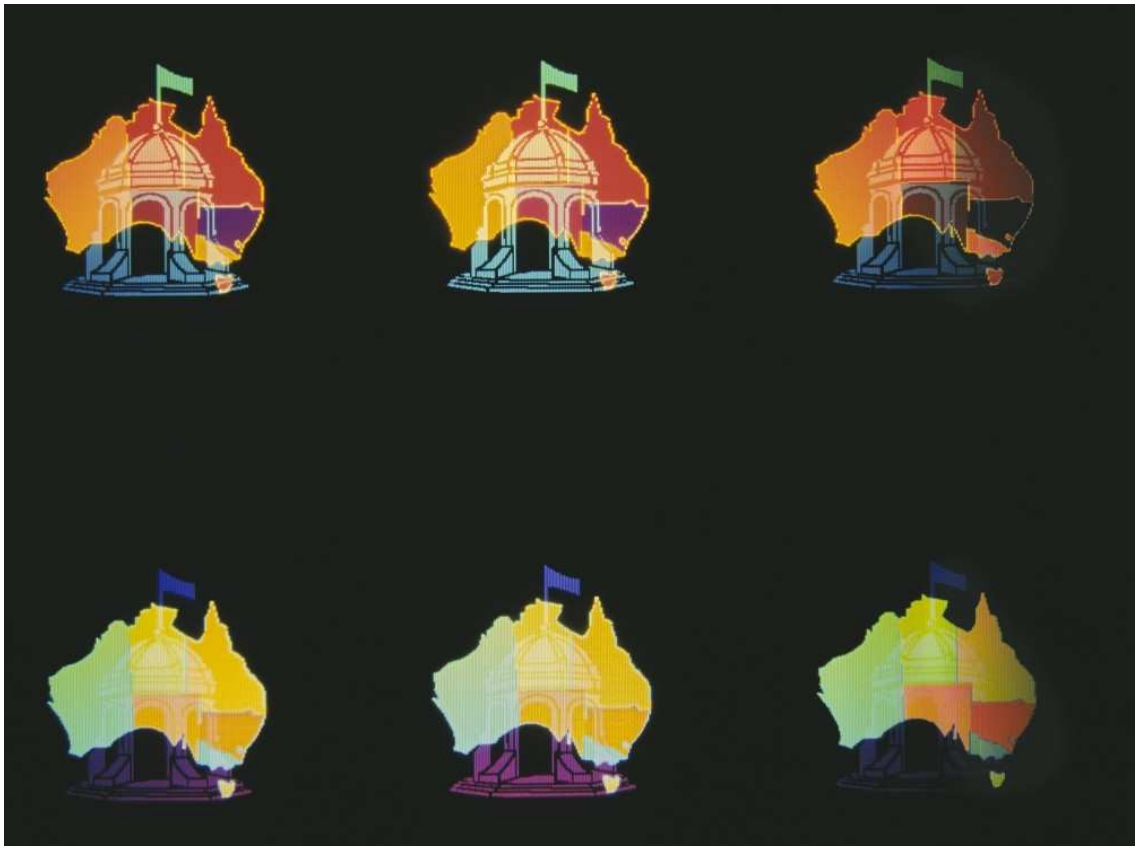

Figure 5. An array of OVD images written by electron beam lithography on a resist coated plate.

Giesecke+Devrient GmbH,
Giesecke+Devrient Currency Technology GmbH,
and Papierfabrik Louisenthal GmbH. - Ex. 1031

Figure 6. An Exelgram on the Master plate showing the alternate OVD images involved in the switch.

PART 2

THE BLANKING AND COINING PROCESS

2.1 Feasibility

A feasibility study, and suggested method of applying OVDs to coins produced by the Royal Australian Mint, was provided by the CSIRO Division of Telecommunications and Industrial Physics. [5]

The Optically Variable Device (OVD) used in our 'hologram' coining program, was developed and manufactured by the CSIRO Division of Manufacturing Science and Technology and is described in ***part 1*** of this paper.

2.2 Preliminary Coining Trials

The OVD has been applied to the Royal Australian Mint coin by transferring the diffractive image from a nickel shim to the surface of the coin during the coining operation.

Giesecke+Devrient GmbH,
Giesecke+Devrient Currency Technology GmbH,
and Papierfabrik Louisenthal GmbH. - Ex. 1031

Extensive coining trials were conducted to determine the rate of expansion, optimum thickness of the shim carrying the OVD images and the number of coins that could be produced from each image. These trials also showed that the surface finish of the coin in the area of the OVD prior to its application was critical to the effectiveness and brightness of the image. The hardness differential between the nickel shim and the coin blank is also a critical factor in transferring an acceptable image to the coin's surface.

2.3 Preparation And Blanking Of Images From The Nickel Shim

The images were received from the CSIRO in the form of 12.5cm square nickel shims. These shims had an array of 48 identical, optically variable structures on their surfaces. The images were very accurately spaced and positioned relative to 4 registration crosses.

The images were blanked from the shim using a purpose designed blanking tool, the design of which presented several interesting challenges.

- To blank the images from the sheet using a single punch and die, presented a problem in indexing from one image to the other and accurate location in the die for each of the 48 individual images. Single punch blanking, would also have been a very time consuming process. On the other hand, if the tool was designed to cut the array of images in one operation, it would be difficult to control the alignment of so many punches and would be quite expensive to make. The blanking force would also be quite high.
  A blanking tool with a row of 6 punches used in conjunction with simple spacing blocks for indexing from one row of images to the next, was found to be a satisfactory compromise. The low blanking force made the tool suitable for use in a simple hand operated fly press.

- Blanking of very thin material requires accurate alignment of the punches with the die and extremely small clearances to obtain clean burr-free edges. To minimise alignment problems, the die was designed to include a bridge type punch guide that was screwed and dowelled to the die block.
  The elliptical shapes were then EDM wirecut in both components simultaneously ensuring the alignment of the punches and dies. This also eliminated the need for a precision die set and punch plate.

- The fragile surface of the nickel shim and the very shallow diffractive structures needed to be protected from contamination and damage during handling and in the blanking operation. Even the smallest scratch, or indentation would have been unacceptable if transferred to a proof quality coin.
  Placing a thin transparent plastic film against the image surface and sealing the four edges with adhesive tape enabled blanking to take place without direct contact with the die face of the tool. The transparent film also allowed the registration crosses to be viewed for alignment in the blanking tool. The nickel shim and the plastic film were blanked as one.

Giesecke+Devrient GmbH,
Giesecke+Devrient Currency Technology GmbH,
and Papierfabrik Louisenthal GmbH. - Ex. 1031

- Alignment of the images with the blanked profile, (in this case an elliptical shape) had to be carefully controlled to ensure symmetry and minimum variation between the individual cut pieces. This was achieved using a transparent positioning aid with engraved reference marks. The shim was placed in a nest together with the aid and moved relative to it, until the marks coincided with the reference marks on the nickel shim. The shim was then clamped in position and the positioning aid removed.
  The nest, when located in the blanking tool, provided accurate location of the images relative to the blanking dies. The nest also functioned as a stripper plate. (ie held the nickel sheet in place as the punches were extracted after blanking each row of OVD's).

The blanked ellipses were separated from the plastic film and stored ready for use in the coining operation.

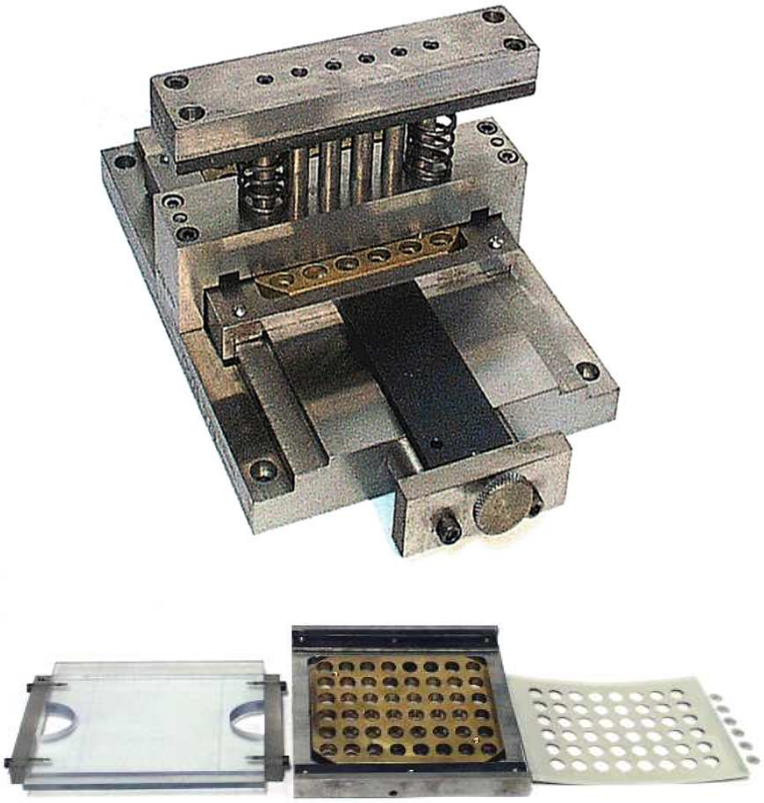

Fig. 7 Blanking tool (top), positioning aid (bottom left), nest (bottom centre) and cut shim

Giesecke+Devrient GmbH,
Giesecke+Devrient Currency Technology GmbH,
and Papierfabrik Louisenthal GmbH. - Ex. 1031

Fig. 8 Blanked elliptical shim.

2.4 Coining Operation

1. A proof coin press was programmed to strike the relief on the coin using several blows without ejection. The upper die was designed to create a shallow pocket in the coin with the same elliptical profile as the OVD shim but slightly larger to allow for the small incremental expansion of the nickel shim that takes place each time a coin is produced. (Fig. 9a)

2. The shim was then placed image down in the formed pocket by the operator and the coining press operated with ejection. (Fig. 9b)

3. The OVD image (in reverse) was transferred from the nickel shim into the surface of the silver coin. (Fig. 9c)

4. The shim was then removed from the pocket of the completed coin. (Fig. 9d)

Steps 1 to 4 were then repeated using the same shim to produce coins until the quality of the OVD image dictated a change to a new shim.

Each coin was manufactured using this process in fine silver (99.9 %). Fig. 10 shows a photograph of the final coin with centrally located OVD. The $5 denomination coin was 38.74 mm in diameter and featured a fully milled edge and Proof finish.

Giesecke+Devrient GmbH,
Giesecke+Devrient Currency Technology GmbH,
and Papierfabrik Louisenthal GmbH. - Ex. 1031

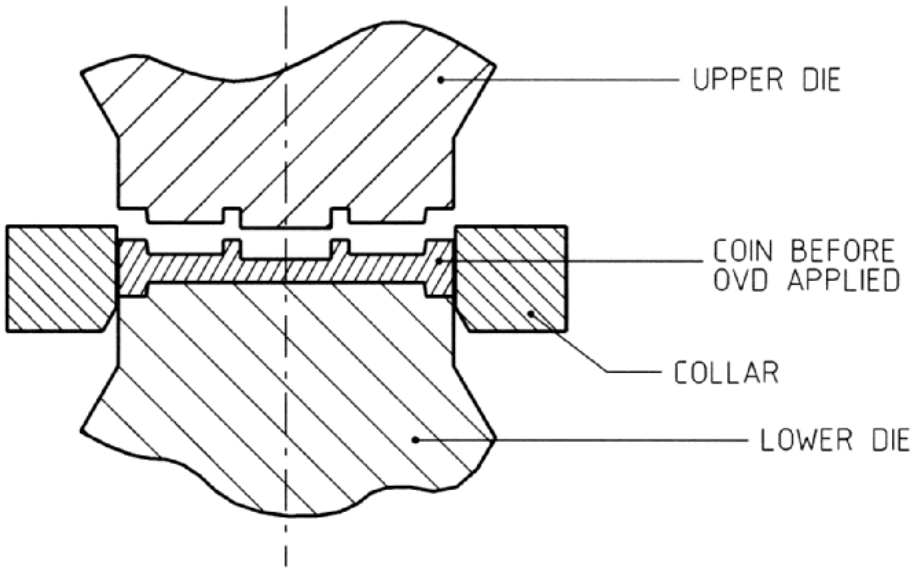

Fig.9a,

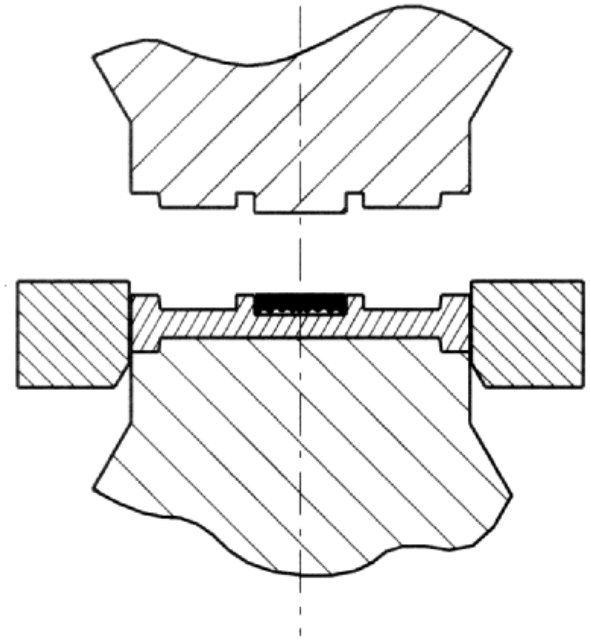

Fig.9b

Giesecke+Devrient GmbH,
Giesecke+Devrient Currency Technology GmbH,
and Papierfabrik Louisenthal GmbH. - Ex. 1031

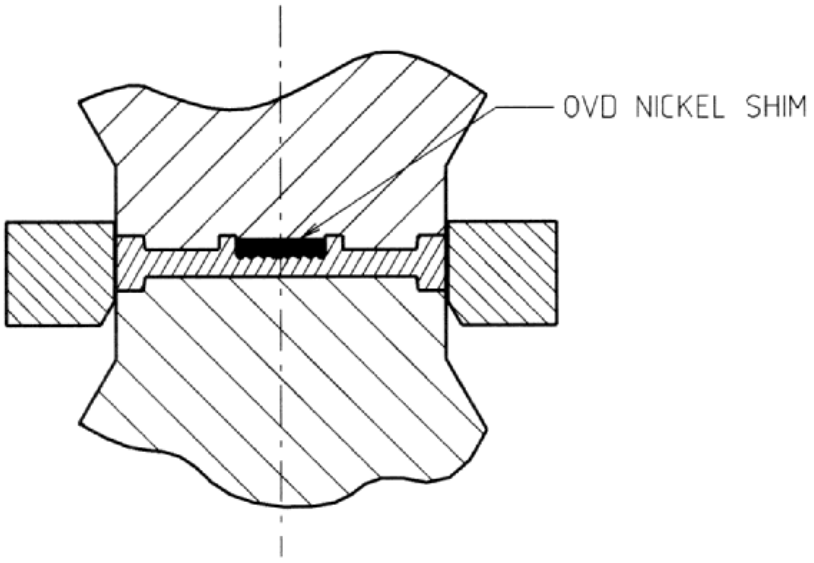

Fig. 9c

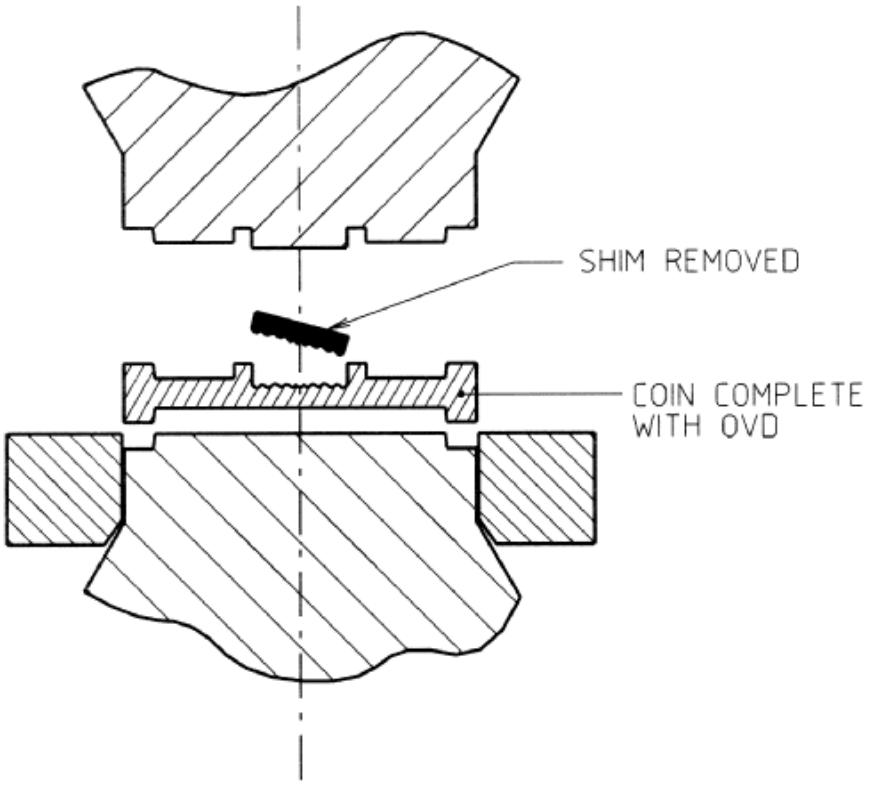

Fig .9d

Giesecke+Devrient GmbH,
Giesecke+Devrient Currency Technology GmbH,
and Papierfabrik Louisenthal GmbH. - Ex. 1031

Figure 10. Centenary of Federation Coin with centrally oriented OVD.

3. Summary

Production of Australia's first coin bearing an Optically Variable Device is the result of a co-operative venture between the CSIRO and the Royal Australian Mint. The combined expertise and resources of the two organisations has culminated in the release of a very exciting and successful product. A limited issue of 10,000 coins, were sold out within days of their release in November 2001 and have since more than doubled in price on the secondary market

Future cooperative development between CSIRO and the Royal Australian Mint of advanced, innovative coining and related processes is planned and is expected to provide the numismatic world with many more outstanding products.

4. References

1. R.L. van Renesse, "Irridescent optically variable devices: a summary" in "Optical Document Security, 2nd Ed., Ed. R.L. van Renesse, Artech House, Boston, 349.
2. R.A. Lee "Micro Technology for anti-counterfeiting", Microelectronic Engineering, 53, (2000), 513.
3. R.A. Lee, "A diffractive device, CSIRO Australia, Patent WO95/04948, Feb.16, 1995.
4. P.W. Leech, B.A. Sexton and R.J. Marnock, "Scanning probe microscope analysis of microstructures in optically variable devices", Microelectronic Engineering, (2001), in Press.
5. M.Scott and Z. Hegedus, "Optically Variable Devices (OVDs) on Coins" Feasibility Study for the Royal Australian Mint. Technical Report No. 1284

Giesecke+Devrient GmbH,
Giesecke+Devrient Currency Technology GmbH,
and Papierfabrik Louisenthal GmbH. - Ex. 1031
View publication stats