US 20050057812A1

(19) United States

(12) Patent Application Publication (10) Pub. No.: US 2005/0057812 A1

Raber (43) Pub. Date: Mar. 17, 2005

(54) VARIABLE FOCUS SYSTEM

(76) Inventor: **Peter E. Raber**, North Bellmore, NY (US)

Correspondence Address:
DOWNS RACHLIN MARTIN PLLC
199 MAIN STREET
P O BOX 190
BURLINGTON, VT 05402-0190 (US)

(21) Appl. No.: **10/728,278**

(22) Filed: **Dec. 4, 2003**

Related U.S. Application Data

(60) Provisional application No. 60/439,776, filed on Jan. 13, 2003. Provisional application No. 60/444,854, filed on Feb. 4, 2003.

Publication Classification

(51) **Int. Cl.**[7] **G02B 27/10**; G02B 15/14

(52) **U.S. Cl.** **359/619**

(57) **ABSTRACT**

A variable focus system (**100**) that includes an electrovariable optic (EVO) (**108**) and a controller (**112**) operatively configured for changing the focal configuration of the EVO. The EVO includes a plurality of movable optical elements (**164**) that may be moved substantially in unison with one another so as to change either the focal length (f) of the EVO, the direction of the focal axis (**132**) of the EVO, or both, depending upon the needs of a particular application. The variable focus system may be used in conjunction with an image source (**116**) to construct a 3D floating image projector (**500, 540, 560, 600**) that projects a series of 2D image slices (IS1-IS7) of a 3D image onto corresponding respective image planes (IP1-IP7) in succession rapidly enough that a 3D floating image (**120**) is perceived by a viewer (**104**).

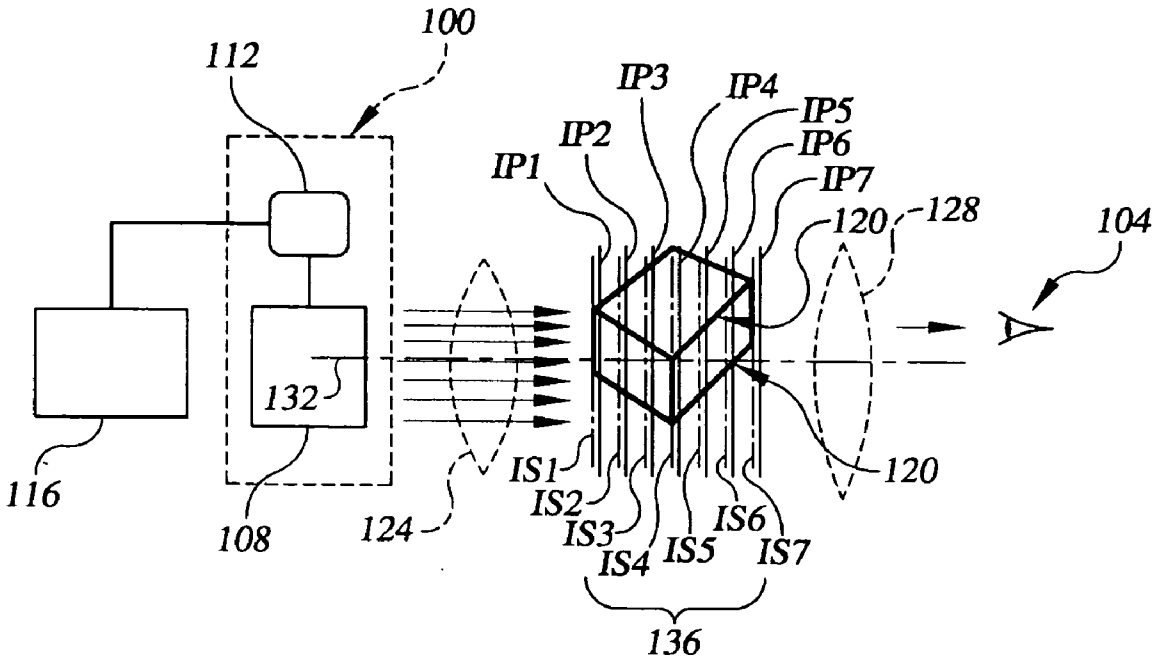

Giesecke+Devrient GmbH,
Giesecke+Devrient Currency Technology GmbH,
and Papierfabrik Louisenthal GmbH. - Ex. 1038

FIG.1

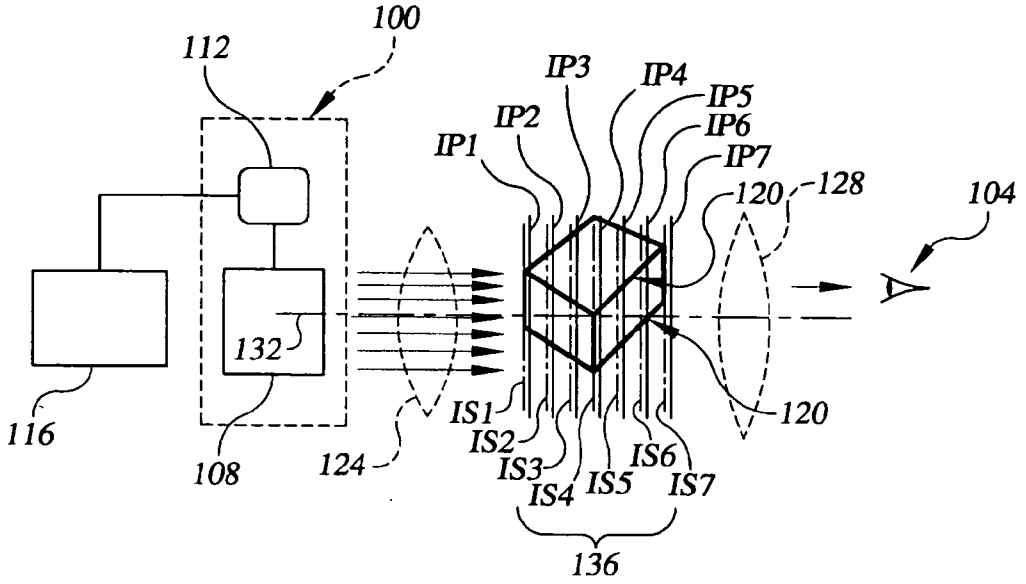

FIG.2

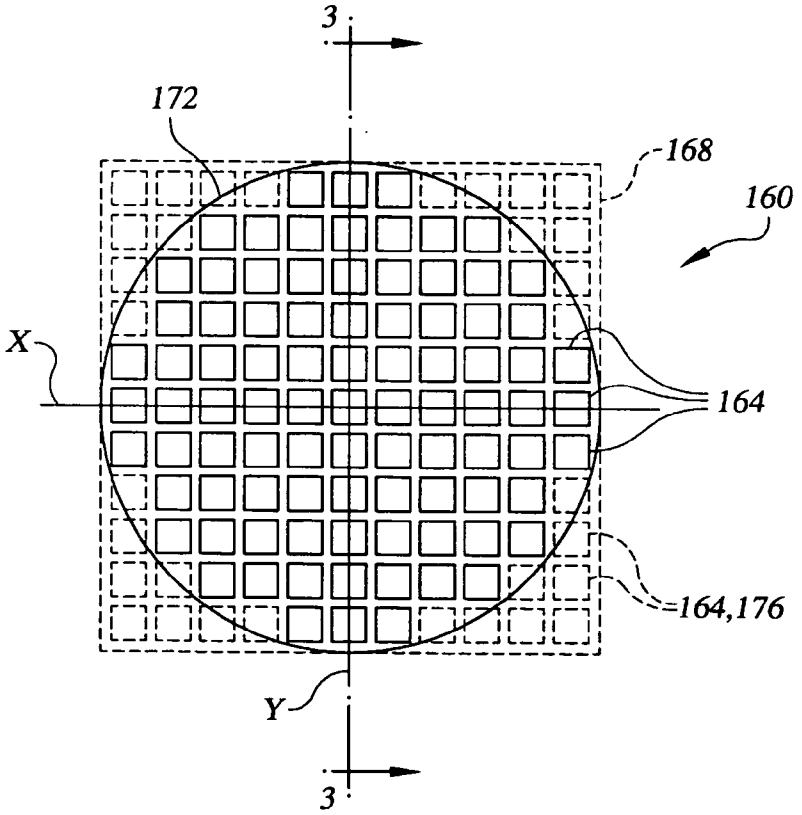

Giesecke+Devrient GmbH,
Giesecke+Devrient Currency Technology GmbH,
and Papierfabrik Louisenthal GmbH. - Ex. 1038

FIG.3

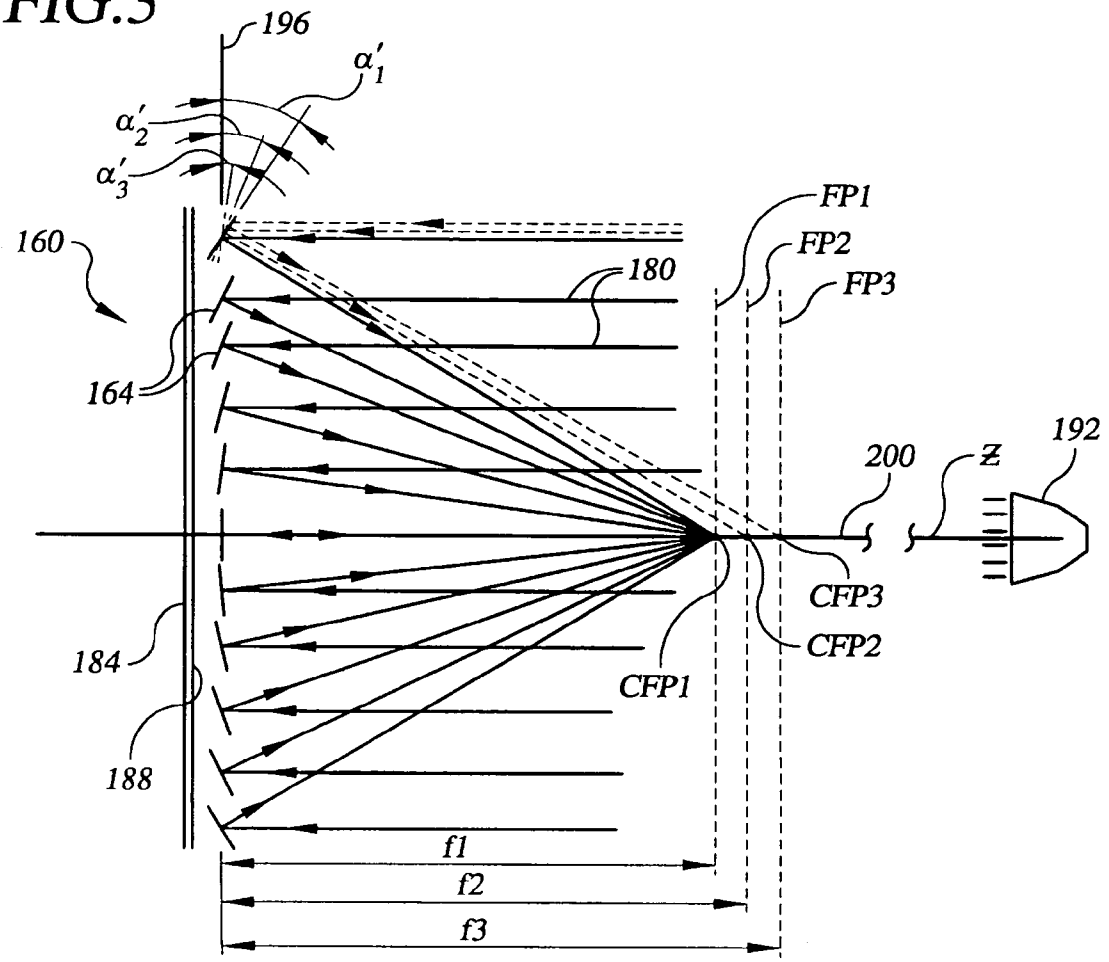

FIG.4

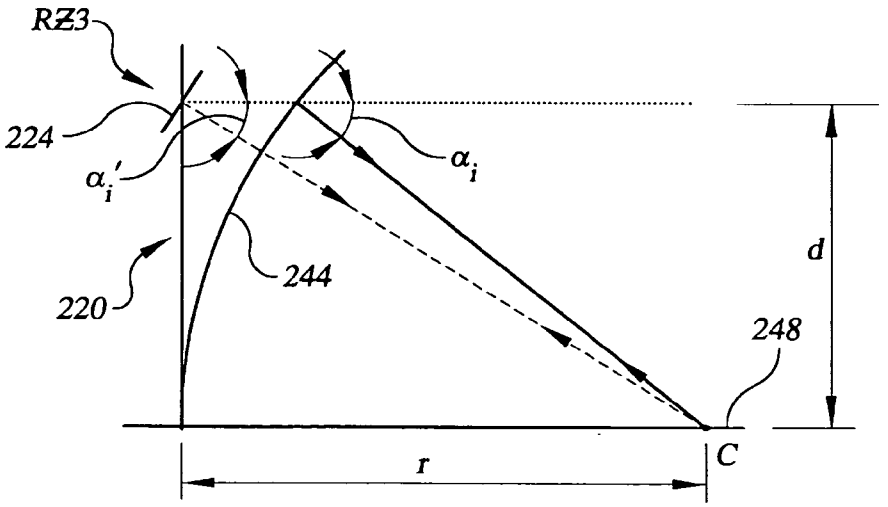

Giesecke+Devrient GmbH,
Giesecke+Devrient Currency Technology GmbH,
and Papierfabrik Louisenthal GmbH. - Ex. 1038

FIG.5A

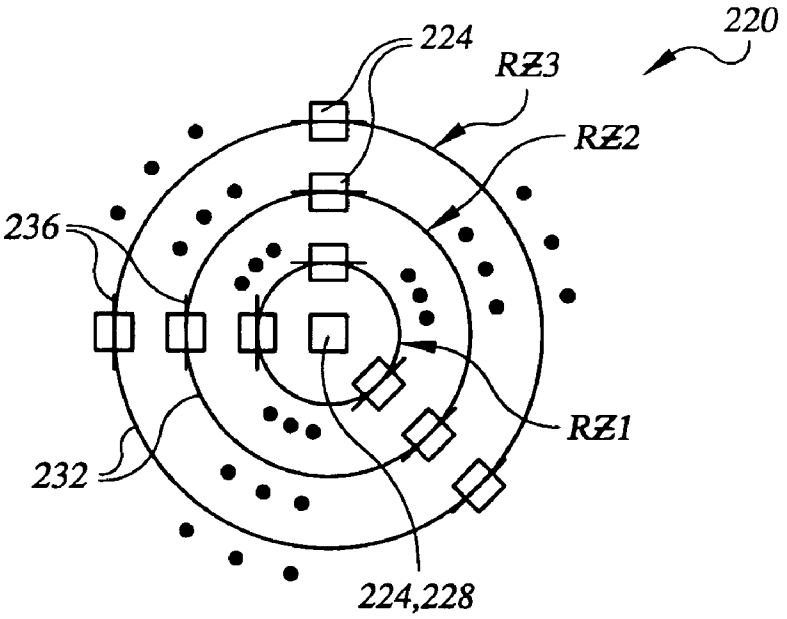

FIG.5B

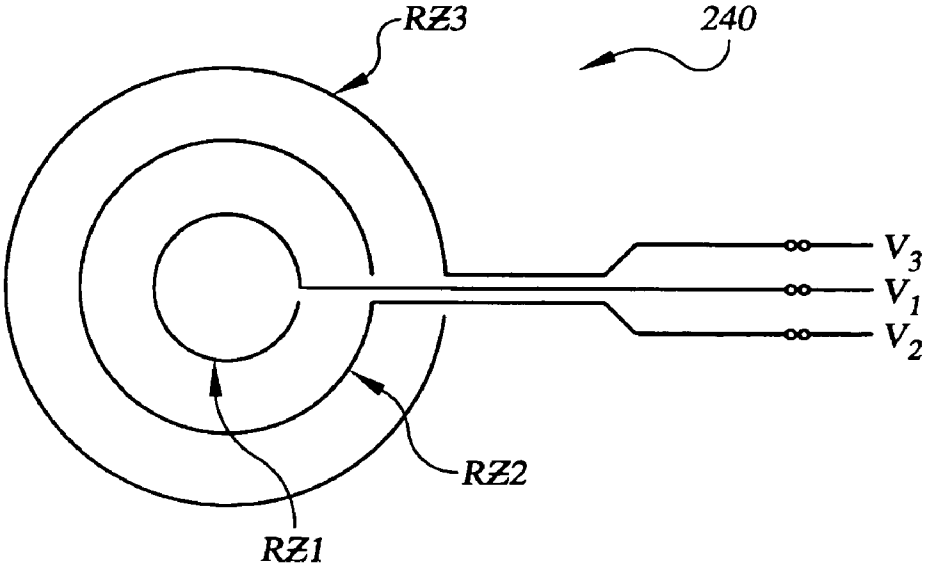

Giesecke+Devrient GmbH,
Giesecke+Devrient Currency Technology GmbH,
and Papierfabrik Louisenthal GmbH. - Ex. 1038

FIG.6

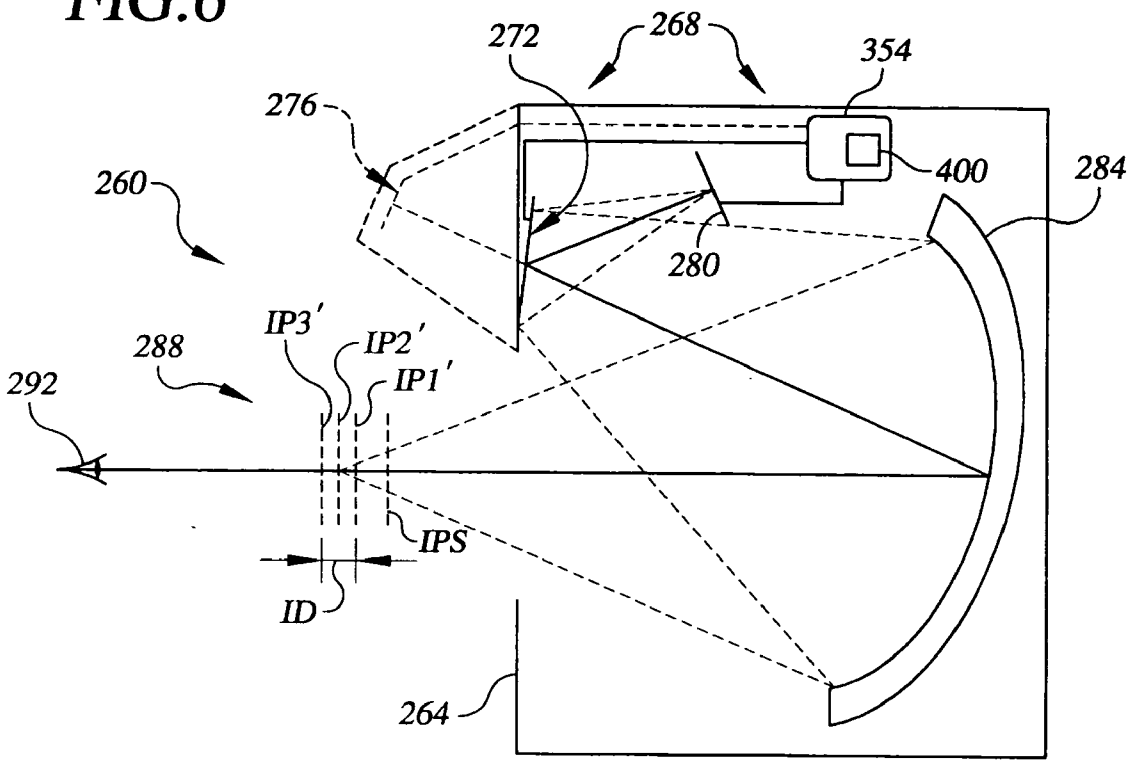

FIG.7

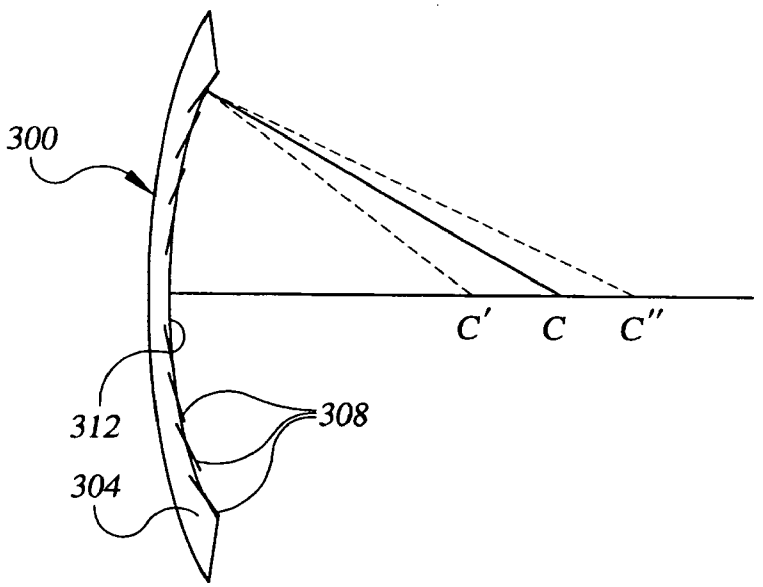

Giesecke+Devrient GmbH,
Giesecke+Devrient Currency Technology GmbH,
and Papierfabrik Louisenthal GmbH. - Ex. 1038

FIG.8

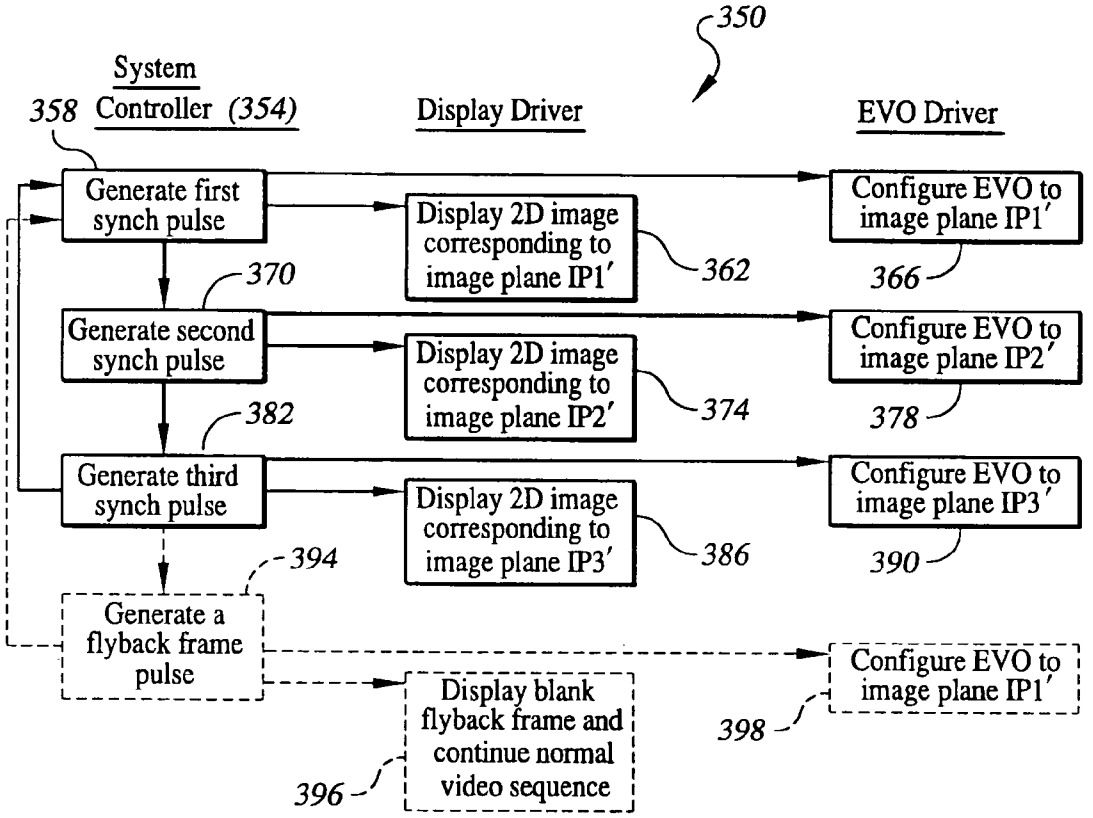

Giesecke+Devrient GmbH,
Giesecke+Devrient Currency Technology GmbH,
and Papierfabrik Louisenthal GmbH. - Ex. 1038

FIG.9

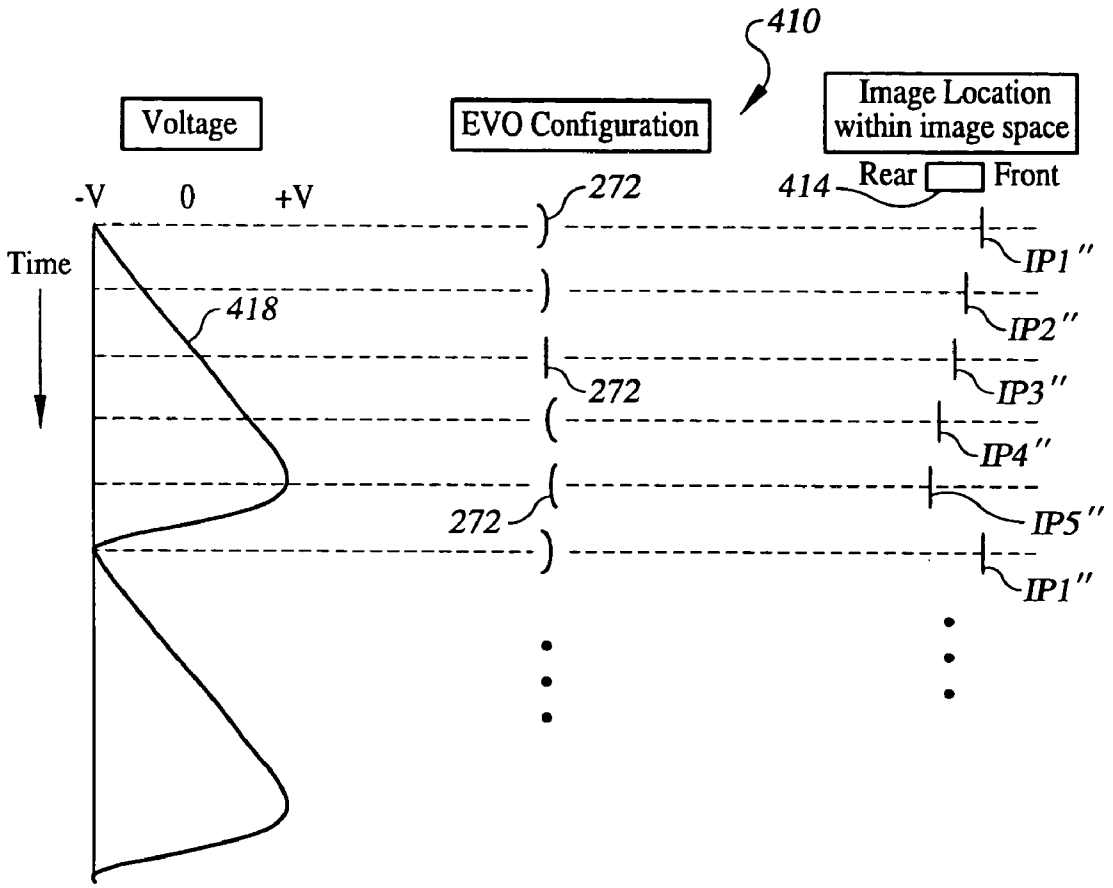

FIG.10

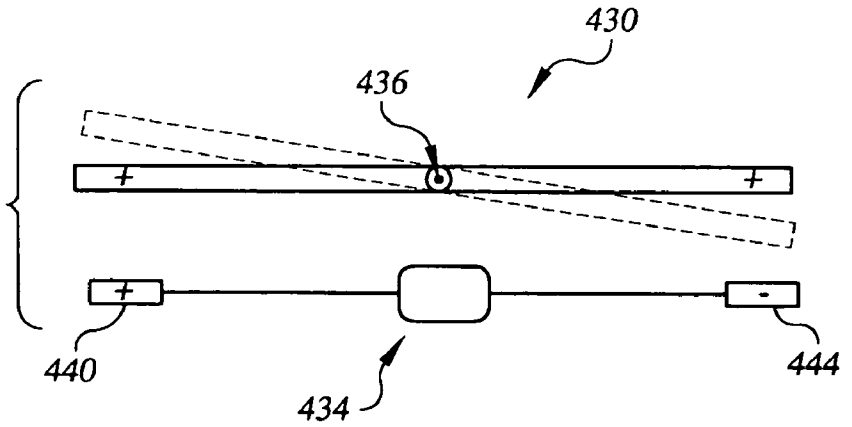

Giesecke+Devrient GmbH,
Giesecke+Devrient Currency Technology GmbH,
and Papierfabrik Louisenthal GmbH. - Ex. 1038

FIG.11

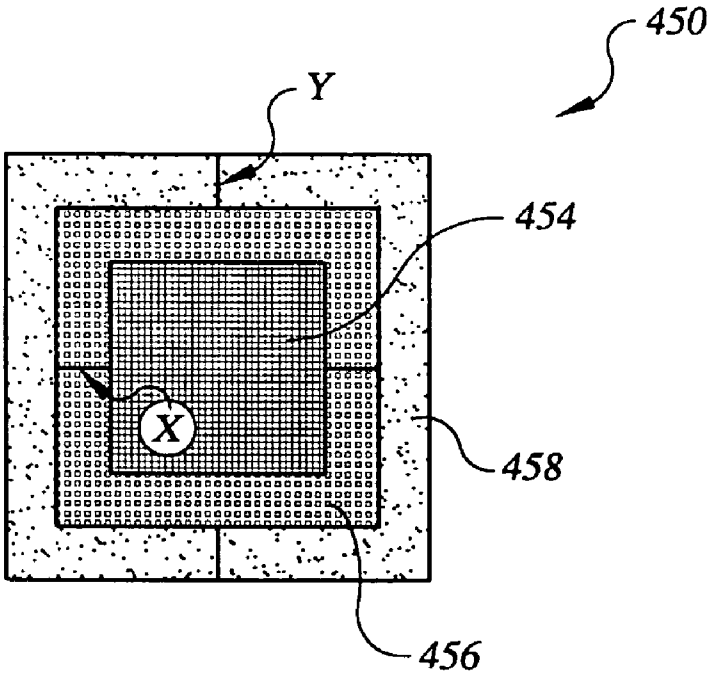

FIG.12

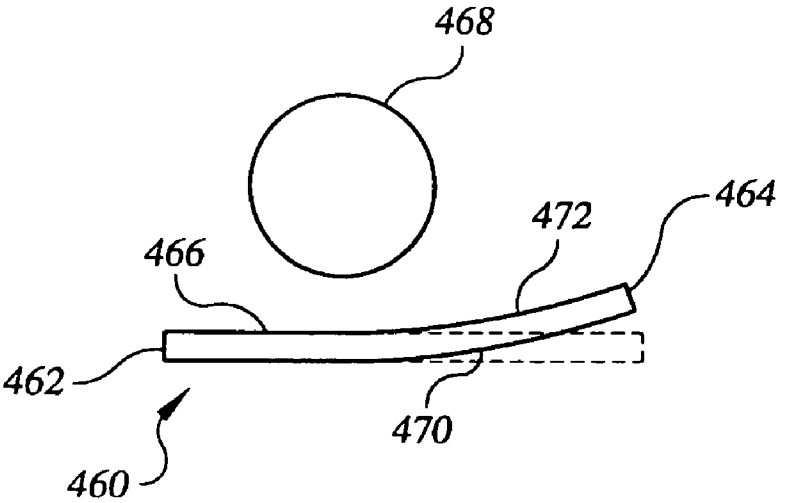

Giesecke+Devrient GmbH,
Giesecke+Devrient Currency Technology GmbH,
and Papierfabrik Louisenthal GmbH. - Ex. 1038

FIG.13

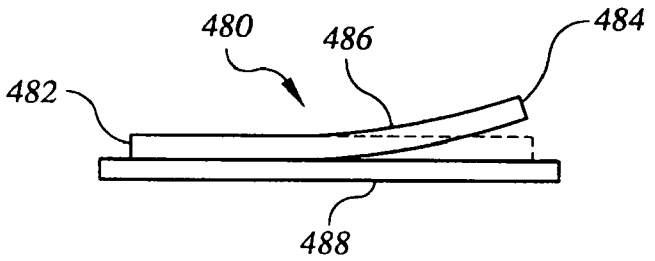

FIG.14

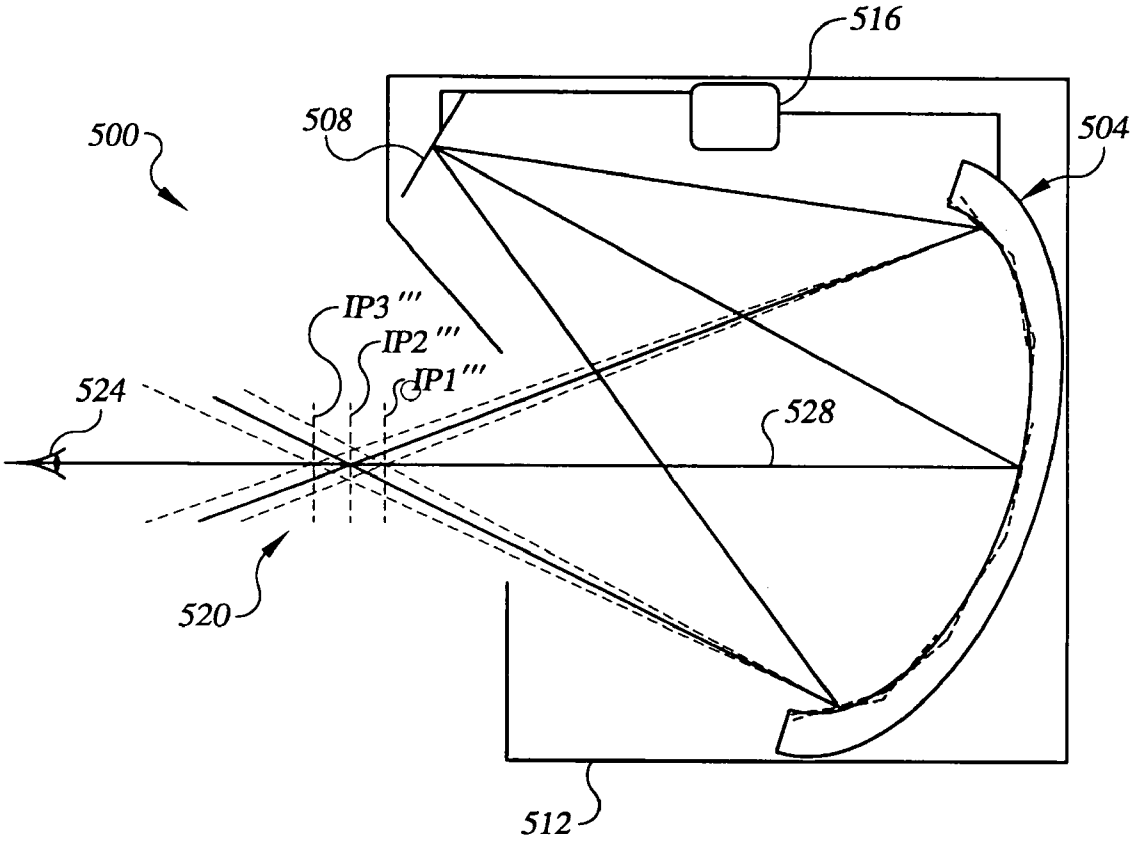

Giesecke+Devrient GmbH,
Giesecke+Devrient Currency Technology GmbH,
and Papierfabrik Louisenthal GmbH. - Ex. 1038

FIG. 15

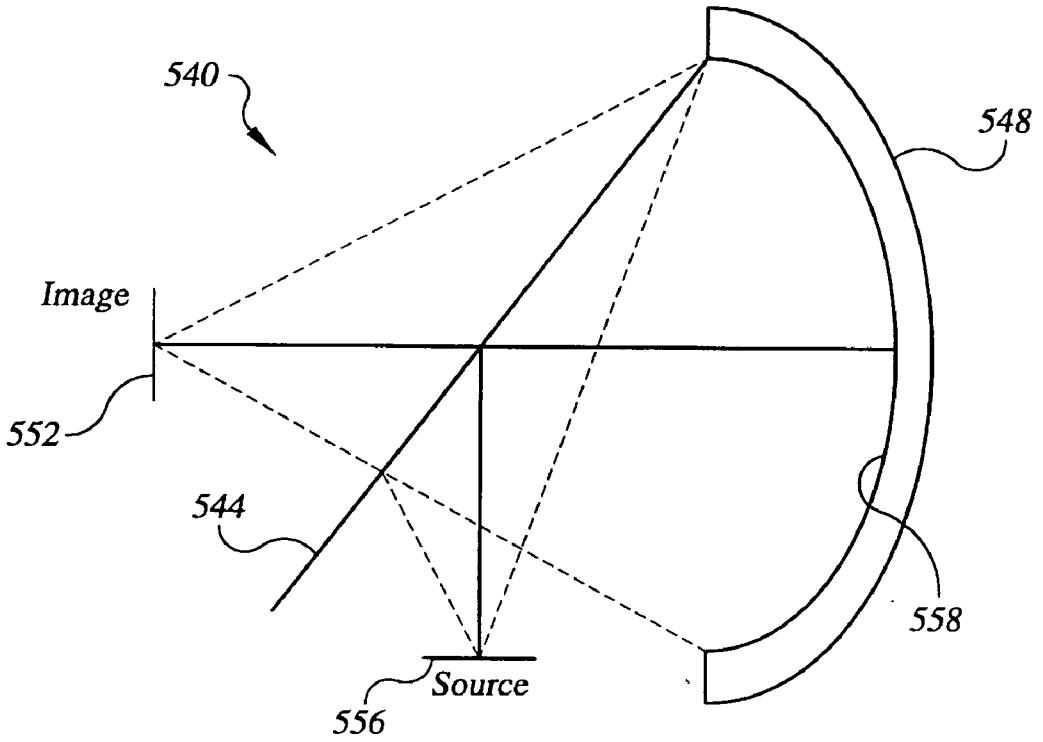

FIG. 16

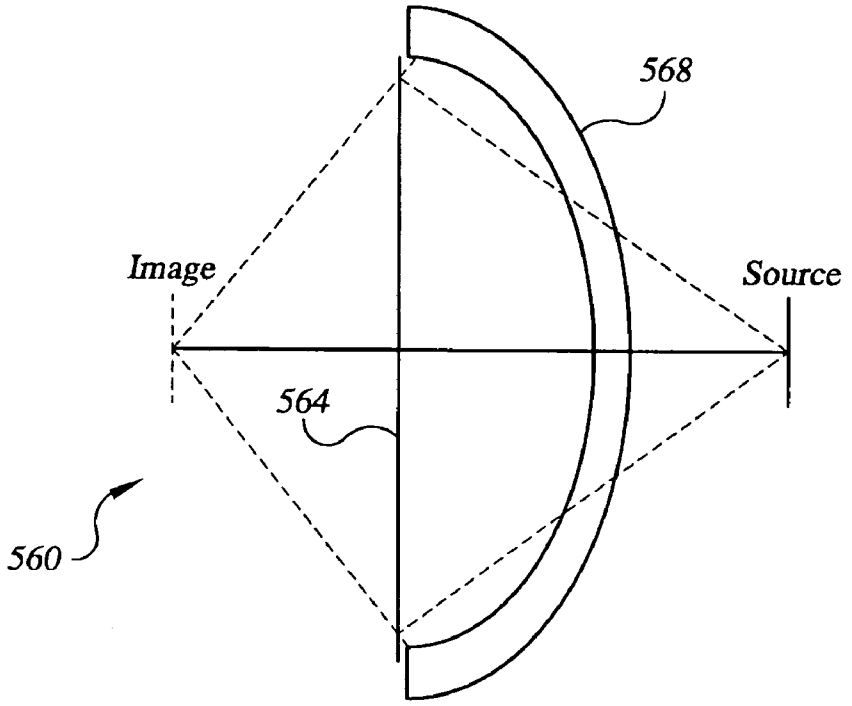

Giesecke+Devrient GmbH,
Giesecke+Devrient Currency Technology GmbH,
and Papierfabrik Louisenthal GmbH. - Ex. 1038

FIG. 17

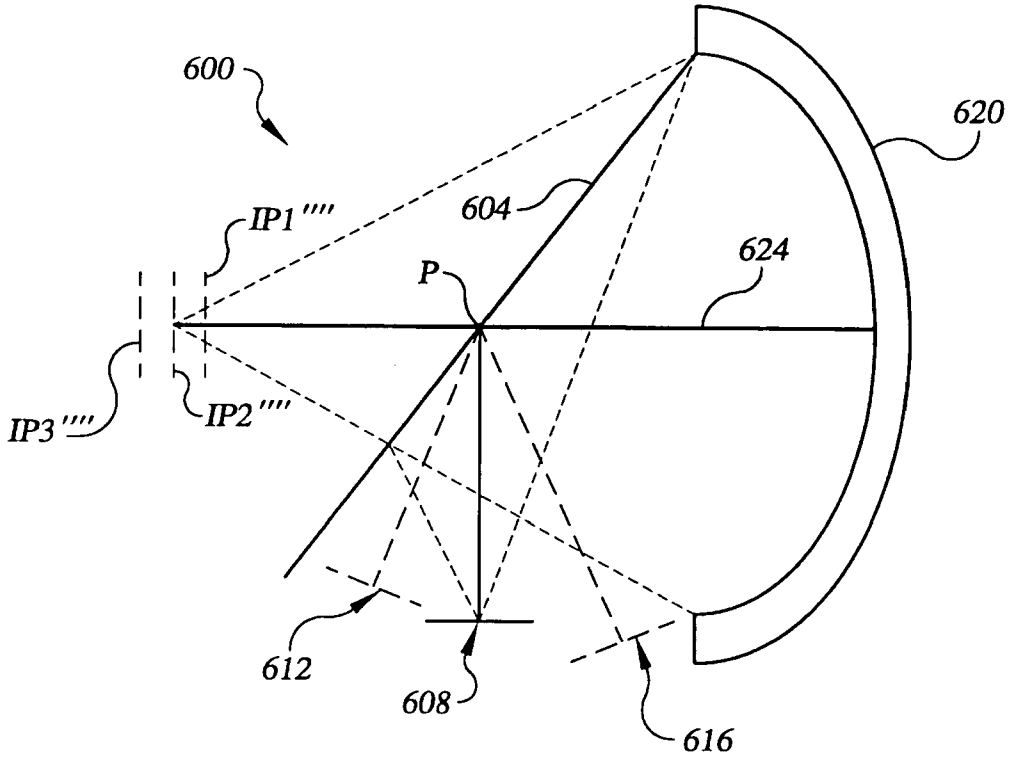

FIG. 18

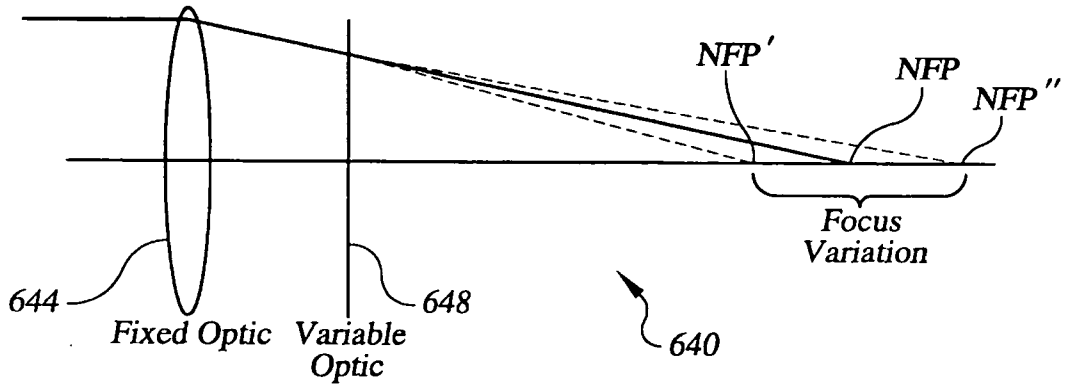

Giesecke+Devrient GmbH,
Giesecke+Devrient Currency Technology GmbH,
and Papierfabrik Louisenthal GmbH. - Ex. 1038

VARIABLE FOCUS SYSTEM

RELATED APPLICATIONS

[0001] This application claims the benefit of priority of U.S. Provisional Patent Application Ser. No. 60/439,776, filed Jan. 13, 2003, and entitled "Electrovariable Optic and Its Application to 3D and Floating Image Displays," and U.S. Provisional Patent Application Ser. No. 60/444,854, filed Feb. 4, 2003, and entitled "Electrovariable Optic Comprising an Array of Moving Flexible Electrodes and its Application to 3D Floating Image Displays," which are incorporated by reference herein in their entireties.

FIELD OF THE INVENTION

[0002] The present invention generally relates to the field of optics. More particularly, the present invention is directed to a variable focus system.

BACKGROUND OF THE INVENTION

[0003] Variable-power optics have long been sought after for a wide variety of applications. One outstanding example of such applications is that of 3D image production. Relatively low cost, high quality and convenient 3D video, cinema and image displays have likewise long been sought after to capture viewer interest, enhance the viewing experience, increase the functionality of computer systems and/or create new uses for 3D imaging. To date, however, conventional 3D light imaging systems have fallen short of being low cost, high quality, convenient and/or suitable for video or cinema. Examples of conventional systems include stereographic systems that require specialized eyewear or headgear to provide one eye of a viewer with an image that is slightly different in perspective from the image provided to the other eye. Drawbacks of these systems include the necessity of wearing bulky, uncomfortable and/or inconvenient viewing devices.

[0004] Other types of conventional 3D light imaging systems include volumetric displays, such as voxel displays having many self-luminescent volumetric elements that are individually controlled to produce a 3D image and multi-planar displays having a plurality of variable-opacity screens spaced from one another onto which corresponding slices of each image are sequentially projected in rapid succession to create a 3D image. Drawbacks of these types of systems include the need for large, heavy and expensive display elements comprising either voxels or multiple planar screens.

[0005] Moreover, voxel and multi-planar displays by themselves do not project 3D images into free-space to make the images appear to "float" in space. Rather, the 3D images of these devices appear within the thicknesses of their display elements. That said, however, a real image projector may be used to project the 3D image of a multi-planar screen device or voxel device into free-space so that the 3D image appears to float in space beyond the projector. This arrangement is shown in connection with a multi-planar screen device in U.S. Pat. No. 6,100,862 to Sullivan and U.S. Pat. No. 6,466,185 to Sullivan et al., which are incorporated herein by reference. However, this type of system is large and heavy due to the multi-planar screen element and even more expensive than the multi-planar device itself due to the addition of the real image projector. What is needed is a relatively inexpensive and lightweight real imaging system.

SUMMARY OF THE INVENTION

[0006] In one aspect, the present invention is directed to a variable focus system comprising an optic that includes a plurality of movable optical elements. A controller is coupled to the optic. The controller generates at least a first signal and a second signal. The first signal causes at least some of the plurality of optical elements to move so as to provide the optic with a first focal configuration. The second signal causes at least some of the plurality of optical elements to move so as to provide the optic with a second focal configuration different from the first focal configuration.

[0007] In another aspect, the present invention is directed to a system for projecting a plurality of 2D images onto a plurality of corresponding respective image planes. The system comprises at least one image source providing a plurality of 2D images and an electrovariable optic reconfigurable to focus each one of the plurality of 2D images onto a plurality of corresponding respective image planes. A controller is coupled with the at least one image source and the electrovariable optic. The controller controls the at least one image source and the electrovariable optic so as to focus each one of the plurality of 2D images onto the plurality of corresponding respective image planes.

[0008] In a further aspect, the present invention is directed to a method of controlling an optic that includes an array of movable optical elements. The method comprises the step of moving at least some of the movable optical elements in the array substantially simultaneously with one another so that the array of movable optical elements has a first focal point. Then, at least some of the movable optical elements in the array are moved substantially simultaneously with one another so that the array of movable optical elements has a second focal point spaced from the first focal point.

BRIEF DESCRIPTION OF THE DRAWINGS

[0009] For the purpose of illustrating the invention, the drawings show a form of the invention that is presently preferred. However, it should be understood that the present invention is not limited to the precise arrangements and instrumentalities shown in the drawings, wherein:

[0010] **FIG. 1** is a simplified schematic diagram showing a variable focus system of the present invention in conjunction with an image source for creating 3D images;

[0011] **FIG. 2** is a front view of an electrovariable optic (EVO) having a plurality of optical elements suitable for use in the variable focus system of **FIG. 1**;

[0012] **FIG. 3** is an enlarged cross-sectional view of the EVO of **FIG. 2** illustrating the variable focus operation of the EVO, and illustrating (for its outer zone only, for the sake of clarity) how it can approximate, as an example, three conventional concave reflectors having different focal lengths;

[0013] **FIG. 4** is a diagram illustrating a method of controlling an EVO of the present invention to approximate a spherical reflector of desired radius of curvature r;

Giesecke+Devrient GmbH,
Giesecke+Devrient Currency Technology GmbH,
and Papierfabrik Louisenthal GmbH. - Ex. 1038

[0014] **FIG. 5A** is schematic diagram illustrating an EVO of the present invention that contains optical elements arranged in concentric radial zones; **FIG. 5B** is a schematic diagram illustrating an electrode addressing scheme for controlling the EVO of **FIG. 5A**;

[0015] **FIG. 6** is a schematic diagram of a 3D floating image projector that includes a variable focus system of the present invention similar to the variable focus system of **FIG. 1**;

[0016] **FIG. 7** is a cross-sectional view of a curved EVO of the present invention;

[0017] **FIG. 8** illustrates a method of controlling the EVO of **FIG. 1** through **FIG. 5** and/or **FIG. 7** in a configuration such as that of **FIG. 6**, for example, so as to focus a series of 2D images onto three corresponding respective image planes, then returning to the first plane and continuing the process;

[0018] **FIG. 9** illustrates an alternative method of controlling an EVO of **FIG. 1** through **FIG. 5** and/or **FIG. 7** in a configuration such as that of **FIG. 6**, for example, so as to focus a series of 2D images onto five corresponding respective image planes;

[0019] **FIG. 10** is a cross-sectional view of a single-tilt-axis optical element that may be used in a variable focus system of the present invention;

[0020] **FIG. 11** is a front view of a double-tilt-axis optical element that may be used in a variable focus system of the present invention;

[0021] **FIG. 12** is a side view of a flexible optical element that may be used in a variable focus system of the present invention;

[0022] **FIG. 13** is a side view of an alternative flexible optical element that may be used in a variable focus system of the present invention;

[0023] **FIG. 14** is a schematic diagram illustrating an alternative 3D floating image projector of the present invention;

[0024] **FIG. 15** is a schematic diagram of a beamsplitter EVO/fixed optic combination of the present invention that may be used to make a 3D image projector;

[0025] **FIG. 16** is a schematic diagram of an alternative beamsplitter EVO/fixed optic combination of the present invention that may be used to make a 3D image projector;

[0026] **FIG. 17** is an alternative floating image projector of the present invention wherein an EVO functions as a scanning mirror to focus images from multiple image sources onto corresponding respective focal planes; and

[0027] **FIG. 18** is a schematic diagram illustrating a compound optical system (e.g., lens and/or mirror combination) of the present invention that incorporates a variable focus system similar to the variable focus system of **FIG. 1**.

DETAILED DESCRIPTION OF THE DRAWINGS

[0028] Referring now to the drawings, **FIG. 1** shows in accordance with the present invention a variable focus system, which is generally denoted by the numeral **100**. As discussed below in detail, system **100** may be used, either alone or in combination with other optics, for displaying 3D images in free-space so that the images appear to a viewer **104** to be floating in space. As those skilled in the art will readily appreciate, although system **100** is primarily described in connection with displaying real 3D images in free space, the system is not so limited. On the contrary, variable focus system **100** may be used in any of a variety of applications wherein it is desired to selectively change the focus (or convergence or divergence) of electromagnetic energy. The applications for which variable focus system **100** may be used can be highly diverse from one another in terms of both type and technical field. Some of these applications are described below, and others will become apparent to those skilled in the art upon reading this disclosure.

[0029] Two primary components of system **100** are an electrovariable optic (EVO) **108** and a controller **112** that controls the EVO in a manner that changes the focus of electromagnetic energy, e.g., visible light, infrared light, ultraviolet light or microwaves, among others, incident the EVO. A common principle underlying the varied and diverse applications of variable focus system **100** mentioned above is the selective adjustment of EVO **108** by controller **112** to change the focus of the incident electromagnetic energy from a source, e.g., image source **116** or any "source" of electromagnetic energy. In the context of the present invention, the term "source" includes not only devices and bodies that emit electromagnetic energy, but also bodies that reflect, transmit and/or absorb electromagnetic energy from one or more emissive sources, as well as real and/or virtual images of such sources. Moreover, the phrase "changing the focus," and similar phrases, include the actions of changing the focal length of EVO **108** or changing the direction of the focal axis **(132)** of the EVO or a combination of these two.

[0030] For example, changing the focal length of EVO **108** allows the EVO, among other things, to focus electromagnetic energy from a source, e.g., source **116**, located in a location fixed relative to the EVO onto a plurality of image points spaced from one another along a linear line in seriatim or, conversely, focus a plurality of sources spaced apart along a linear line, in seriatim, onto a common image point. Changing the direction of the focal axis of EVO **108** allows the EVO, among other things, to focus electromagnetic energy from a source located in a location fixed relative to the EVO onto a plurality of image points spaced from one another along an arcuate line in seriatim or, conversely, focus a plurality of sources spaced apart along an arcuate line, in seriatim, onto a common image point. Of course, changing both the focal length and focal direction of EVO **108** simultaneously allows the EVO, among other things, to focus, in seriatim, electromagnetic energy from a single source fixed relative to the EVO onto a plurality of image points located virtually anywhere in space within the reflective or refractive limits of the EVO or, conversely, focus, in seriatim, electromagnetic energy from a plurality of sources located anywhere in space within the reflective or refractive limits of the EVO to a common image point. With EVO **108** and controller **112** having such flexibility, those skilled in the art will readily appreciate the applicability of these components to applications much different than the real image projection application of system **100** that is described below.

[0031] That said, however, when variable focus system **100** is used for projecting real images into free space, the

Giesecke+Devrient GmbH,
Giesecke+Devrient Currency Technology GmbH,
and Papierfabrik Louisenthal GmbH. - Ex. 1038

system may be used in conjunction with at least one image source **116**, e.g., a 2D video display, that displays a series of 2D images. In this application, image source **116** may be controlled by controller **112** so as to focus the 2D images onto a plurality of image planes, e.g., image planes IP1-IP7, in succession with one another. If the content of each 2D image corresponds to a respective "slice" of a desired 3D image **120**, and these images are projected onto image planes IP1-IP7 in sufficiently rapid succession, then a perceptible 3D image will be formed among the image planes. It is noted that references to "image plane,""focal plane" and the like throughout this disclosure are intended to apply to extended two-dimensional image regions, some of which may in fact be curved (e.g., due to optical field curvature) rather than planar. Despite the use of the term "plane" and like terms, and the depiction in the figures of such surfaces as planar, such references are intended to also include such curved surfaces without loss of generality.

[**0032**] In general, and as mentioned above, an EVO of the present invention, such as EVO **108** of **FIG. 1**, may be controlled in a manner that changes either its focal length or direction of its focal axis, or both. Consequently, since both of these concepts relate to the focusing characteristics of the EVO, the term "focal configuration," and similar terms, are used herein and in the appended claims relative to the EVO to capture the configurability of the EVO encompassed by the present invention. Thus, when it is said that a controller of the present invention, such as controller **112**, is operatively configured to change the "focal configuration" of an EVO of the present invention, this means that the controller is operatively configured to change: (1) the focal length of the EVO or (2) the direction of the focal axis of the EVO or (3) both the focal length and focal axis direction of the EVO. Those skilled in the art will appreciate how an EVO of the present invention must be "focally configured" in order to suit a particular application. The following disclosure discusses some of the scenarios when it is appropriate to control one, the other or both of the focal length and focal axis direction.

[**0033**] In one embodiment, variable focus system **100** may be used to project 3D image **120** into free space. In this case, image planes IP1-IP7 will be located in free space. In other embodiments, variable focus system **100** may be adapted for displaying 3D image **120** within a screen structure (not shown), such as the multi-panel variable opacity screen structure disclosed in the Sullivan and Sullivan et al. patents discussed in the background section above and incorporated into this disclosure by reference. In addition, variable focus system **100** may also be used for forming virtual 3D images. Generally, the difference between forming a real image and a virtual image relates to the location of the final optic relative to 3D image **120**. When the final optic traversed by the light rays that form 3D image **120** is located behind that image relative to viewer **104**, then the image is a real image. This is illustrated by optic **124**. On the other hand, if that final optic is located between 3D image **120** and viewer **104**, as illustrated by optic **128**, then the image is a virtual image.

[**0034**] Variable focus system **100** has many practical applications wherein 3D viewing is desirable and/or necessary, including cinema, video, virtual reality systems, training simulators, video games, lectures and informational presentations, among many others. Those skilled in the art will appreciate that variable focus system **100** of the present invention has broad applicability to a wide variety of uses across many different fields. Therefore, a lengthy list of uses for system **100** is not necessary herein for those skilled in the art to understand the broad scope of the invention. However, some alternative uses of variable focus system **100** are described below. In this connection, it is noted that although the present invention is described mostly in connection with forming images utilizing visible light, the invention is not so limited. On the contrary, the present invention may have applications for focusing electromagnetic energy outside the visible spectrum, e.g., in the radio, infrared or ultraviolet portions of the electromagnetic spectrum, among others. Several examples of uses outside the visible light spectrum are mentioned below in connection with alternative uses of variable focus system **100** of the present invention. Those skilled in the appropriate arts will no doubt recognize other applications for variable focus system **100**.

[**0035**] Generally, variable focus system **100** and image source **116** operate as follows to create 3D image **120**. For simplicity, system **100** is primarily described in the context of a still image, i.e., an image in which all of the elements therein do not move relative to one another or relative to any fixed reference point outside of the system. Such a still image may be a standalone still image or may constitute a single frame of a moving scene, such as a video and cinematic scene. The primary difference between standalone still images and frames of moving images is the number of times 3D image **120** is displayed during a period of time. For a standalone image, the same 3D image is presented repetitively throughout the entire period of time it is desired to present that image. On the other hand, if 3D image **120** is a frame of a moving image, that frame is generally displayed only a limited number of times, once in some cases, during the length of the moving scene so as to create the illusion of motion with other slightly different frames.

[**0036**] As with any 3D image, 3D image **120** may be considered to be made of a plurality of planar (2D) image slices that are parallel to one another. Depending upon the resolution, these image slices may number from two to infinity. In the present example, seven image slices IS1-IS7, corresponding to the seven image planes IP1-IP7 mentioned above, are shown. Moreover, these image slices may be oriented in any manner relative to 3D image **120**. In the present case, however, image slices IS1-IS7 are oriented orthogonally with respect to the depth of 3D image **120**, the depth being the dimension of the 3D image along the focal axis **132** of EVO **108**. Accordingly, floating 3D image **120** is formed in space by focusing image slices IS1-IS7, provided by image source **116**, onto, respectively, image planes I1-IP7 in succession with one

[**0037**] another at a rate fast enough to avoid viewer-perceived flicker in the image. This successive focusing of image slices IS1-IS7 onto image planes IP1-IP7 is repeated, generally, for the length of time that 3D image **120** is desired to appear to a viewer.

[**0038**] A benefit of variable focus system **100** is that, generally, image source **116** may be a conventional image source, such as a cathode ray tube, liquid crystal display, plasma display, digital light processor display or projector/screen system, among others. Since those skilled in the art are readily familiar with such devices, image source **116**

Giesecke+Devrient GmbH,
Giesecke+Devrient Currency Technology GmbH,
and Papierfabrik Louisenthal GmbH. - Ex. 1038

need not be described in detail herein, although some general performance considerations for the image source are discussed below.

[0039] Rapid variation of the focal length of EVO **108** can be carried out at a high enough rate that viewer **104** perceives the motion with respect to the display of image slices IS1-IS7 as continuous rather than discrete. This phenomenon is known as "persistence of vision," and it also provides the basis for cinema and video. Persistence of vision is achieved in cinema and video, and also with the present invention, by rapidly presenting a varying series of still images to a viewer. By making image source **116** a video-type display, the variation of the optical power of EVO **108** may be synchronized, e.g., via controller **112**, with 2D video images at a sufficiently high frame rate that multiple image planes IP1-IP7 containing corresponding image slices IS1-IS7 of the video images may be presented to viewer **104**, who then perceives the image slices as appearing simultaneously with one another. Since the content of each frame, i.e., image slice IS1-IS7, is completely controllable, the sequential frames can be made to include information suitable for the image depth location provided by EVO **108**.

[0040] At present, the frame rate of common low-cost consumer-scale video sources is typically less than 200 Hz. In order to provide relatively flicker-free 3D imaging, the total depth of the image region **136** defined by image planes IP1-IP7 should be reproduced at a rate of 24-30 Hz as a goal (i.e., standard movie or television frame rates), or even faster. For a video-type image source of no more than 200 Hz capability, this implies an image depth of 6-8 image planes. Image slices IS1-IS7 reproduced at rates as low as 20 Hz may provide acceptable image quality under certain lighting conditions. In general, the higher the image rate, the better the perceived image quality. As higher image rates typically require a more expensive image source **116**, a cost-benefit analysis will need to be performed in selecting image reproduction rates for an intended application.

[0041] However, it is expected that future consumer-grade video displays suitable for use as image source **116** will advance to much higher frame rate capabilities, particularly as driven by demand for gaming and other applications, including 3D video imaging. Even today, the cost of digital light processing (DLP) projectors, which can provide frame rates in excess of 1000 Hz at high brightness, is falling rapidly. Furthermore, Grating Light Valve (GLV) technology has similar or greater promise, with even higher contrast ratios. The 6-8 plane image depth limitation associated with conventional 200 Hz analog video sources capability is eliminated with such digital image devices, and the cost of displays utilizing DLP, GLV and other digitally-based technology is expected to fall dramatically. EVO **108** can utilize similar digital technology, and is therefore readily compatible with digital image devices and their high frame rates. Thus, EVO **108** may be used with these video-type image sources to produce 3D floating images with image depths of several dozen image planes. The image depth limitation is generally due to limitations on image source **116** and is not inherent in EVO **108** itself.

[0042] As mentioned above, EVO **108** is the component of system **100** that focuses image slices IS1-IS7 the EVO receives from image source **116** onto image planes IP1-IP7. **FIGS. 2 and 3** illustrate one embodiment of an EVO **160** suitable for use in system **100**. EVO **160** may comprise a plurality of optical elements **164**, at least some of which are movable to a plurality of orientations corresponding to the plurality of focal lengths of the EVO that allow the EVO to focus image slices, e.g., image slices IS1-IS7 of **FIG. 1**, onto corresponding image planes, e.g., image planes IP1-IP7 of **FIG. 1**. Optical elements **164** may be arranged in any suitable manner, such as the rectangular array shown. Optical elements **164** in the rectangular array may be present in a rectangular region **168**, circular region **172**, or a region of any other shape desired. Circular region **172** may be desired in some applications, e.g., to suit a particular design or to reduce manufacturing costs due to eliminating some of the optical elements **176** located outside the circular region. It is noted that optical elements **164** may be any suitable size, but in the present application their size will typically, but not necessarily, be on the order of conventional micro-electro-mechanical systems (MEMS) elements. In addition, optical elements **164** need not be rectangular, but rather may be another shape, such as circular, or arcuate, among others, selected to suit a particular design.

[0043] **FIG. 3** illustrates the manner in which EVO **160** achieves its variable focus ability that allows the EVO to focus light or other electromagnetic energy (represented by rays **180**) successively onto multiple focal planes, such as focal planes FP1-FP3 shown. (EVO **160** is here depicted as simulating a parabolic optic, focusing collimated light rays from infinite conjugates onto multiple focal planes. However, as those skilled in the art will appreciate, the method shown is applicable to other effective optical shapes and to the focus of finite-conjugate light rays to corresponding multiple image planes as well.) Optical elements **164** may be mounted on a substrate **184** that provides the optical elements with stable and rigid support relative to the internal and external forces EVO **160** will be subject to during normal use. Among others, internal forces are due to, e.g., the weight and movement of optical elements **164**, and external forces are due to, e.g., forces involved in transporting a device (not shown) incorporating EVO **160** from one location to another. Substrate **184** may be any sort of structure suitable for a particular application and/or type of optical elements **164**. For example, optical elements **164** may be MEMS-type elements fabricated on a silicon wafer. In this case, substrate **184** is the silicon wafer. In other cases, some of which are described below, substrate **184** may include a conventional optic or other relatively rigid body, including float glass. Substrate **184** may desirably be transparent in some applications. Substrate **184** may have a surface **188** to which optical elements are mounted. Surface **188** may be planar, curved, or have any other suitable profile. Alternatively, substrate **184** may be an open-type structure and, therefore, need not have a continuous mounting surface. For example, substrate **184** may have a plurality of discrete mounting points, where optical elements **164** may be mounted, that define the desired profile.

[0044] **FIG. 3** shows optical elements **164** as planar reflective elements that reflect rays **180** back toward a nearby focus in a direction generally toward source **192**. (Here, source **192** is intended to be understood schematically, for example as representing a large source, or source image, at near-infinite distance that produces rays **180** substantially parallel to the EVO axis, as well as other parallel families of rays (not shown) at other angles to that

Giesecke+Devrient GmbH,
Giesecke+Devrient Currency Technology GmbH,
and Papierfabrik Louisenthal GmbH. - Ex. 1038

axis. In this illustrative example, EVO **160** is preferably designed to approximate a parabolic mirror; however, the effects described are equally applicable to other configurations without loss of generality.) Variable focus of EVO **160** may be achieved by moving, e.g., tilting, the necessary optical elements **164** by a tilt angle α' relative to a frame of reference, e.g., plane **196**, so that rays **180** reflected from each optical element are reflected to the same focal plane, e.g., FP**1**, FP**2**, or FP**3**, at substantially the same time. For example, as illustrated in **FIG. 3**, the uppermost optical element **164** is shown at three different tilt angles α'_1, α'_2, α'_3 relative to plane **196** perpendicular to the central focal axis **200** of EVO **160**. Tilt angle α'_1 directs a corresponding incoming ray **180** onto focal plane FP**1** to contribute to providing EVO **160** with a first focal length f1; tilt angle α'_2 directs the ray onto focal plane FP**2** to contribute to providing the EVO with a second focal length f2, and tilt angle α'_3 directs the ray onto focal plane FP**3** to contribute to providing the EVO with a third focal length f3. Others of optical elements **164** are tilted at appropriate angles depending on their location relative to central optical axis **200** so as to direct the corresponding light rays onto the corresponding focal planes FP**1**-FP**3** in simultaneous succession so that the overall effect of moving the necessary ones of the optical elements is to provide EVO **160** with, effectively, discrete focal lengths f1-f3. Again, the same principles are applicable to finite-conjugate optical configurations with image planes substituted for the focal planes, without loss of generality.

[**0045**] In this manner, EVO **160** of the present invention may be reconfigured to simulate, e.g., three conventional optical elements having focal lengths f1-f3 or a single conventional compound optic system containing a plurality of conventional optical elements capable of being focused at discrete focal lengths f1-f3 or at corresponding multiple image planes. As those skilled in the art will readily appreciate, the focus of EVO **160** at each focal length f1-f3 is achieved in a manner similar to a conventional fixed-focus Fresnel optic of the same focal length. Hence, EVO **160** may be characterized as a variable focus Fresnel-type optic. Even though EVO **160** has been illustrated as having three discrete focal lengths f1, f2, f3, optical elements **164** may be moved in a manner that provides the EVO with any number of discrete focal lengths desired so as to define a corresponding number of focal (or image) planes having any desired spacing therebetween.

[**0046**] The particular ones of optical elements **164** shown in **FIG. 3** are shown as tilting about local axes that are parallel to axis X of **FIG. 2**. This is so because these optical elements **164** lie in the YZ plane and the central focal points CFP**1**-CFP**3** of focal planes FP**1**, FP**2**, FP**3**, respectively, lie along axis Z. Thus, optical elements **164** shown in **FIG. 3** in connection with this scenario require only a single tilt axis, i.e., local axis x. Similarly, those of optical elements **164** lying in the XZ plane require only a single tilt axis, local axis y for this scenario. However, those skilled in the art will readily appreciate that with this particular rectangular array of optical elements **164** and this focusing scenario, others of the optical elements not lying along the YZ and XZ planes may require two axes of tilt, e.g., local axes x and y, to allow those optical elements to direct the corresponding rays **180** to the corresponding central focal points CFP**1**-CFP**3**. Nevertheless, as will be discussed with respect to **FIG. 5A**, the substitution of a polar array for this rectangular array allows each of the optical elements **164** to achieve the identical focusing scenario with only a single tilt axis per element. This vastly decreases the complexity and cost of the tilt mechanism and element addressing scheme, thereby making low-cost EVO systems feasible.

[**0047**] Those skilled in the art will also readily appreciate that, although optical elements **164** have been shown and described as being reflective elements, they may alternatively be refractive elements (refractors or simple windows) or refractive/reflective elements (beamsplitters), depending upon the location of electromagnetic radiation source **192** relative to focal planes FP**1**, FP**2**, FP**3**. Embodiments of the present invention utilizing beamsplitting elements are described below in connection with **FIGS. 15-18**. As those skilled in the art will readily appreciate, such beamsplitting elements may be, e.g., of the spectral type or the dichroic type, among others, depending upon the application of EVO **108**.

[**0048**] **FIG. 4** is similar to **FIG. 3**, but with the EVO **220** preferably designed to approximate a spherical mirror rather than parabolic. As such, it is more suitable for sources and images near unity conjugates, rather than infinite conjugates. Because of the spherical approximation, the definition of tilt angle α and the control equation for the element tilts are slightly different from those for the parabolic approximation of **FIG. 3**. Nevertheless, both equations are determinative and directly applicable to rotationally symmetric EVOs comprising single-axis elements, and by extension, so are other similar equations for other rotationally symmetric surface types or portions thereof that may be desired for particular applications.

[**0049**] **FIGS. 4, 5A** and **5**B illustrate one control scheme that controller **112** of **FIG. 1** may use to control EVO **108**, wherein EVO **108** is the polar/planar EVO **220** illustrated in **FIGS. 4 and 5**A controlled to simulate three conventional spherical reflectors having three different focal lengths. For example, as particularly shown in **FIG. 5A**, EVO **220** may contain optical elements **224** arranged in a "concentric" array, e.g., the polar array shown, that may comprise a central optical element **228** and a plurality of concentric rings **232** each comprising a plurality of optical elements **224**. The embodiment shown in **FIG. 5A** is highly desirable in EVO applications since, in general, a polar array can typically better approximate conventional spherical optics than a rectangular array, and the polar array driving scheme can be far more cost-effective and practical. Depending upon the configuration of the polar array and the location of the focal planes of EVO **220** relative to the image source (not shown), optical elements **224** may need only move, e.g., tilt or flex, in one direction about a tilt axis **236** tangent to a circle touching all tilt axes of the optical elements in the same concentric ring **232**, or radial zone (RZ**1**, RZ**2**, Rz**3**). Flexible optical elements **460**, **480** of **FIGS. 12 and 13** below as well as hinged and single axis tilting optical elements **164**, **176** mentioned above in connection with **FIGS. 2 and 3** and below in connection with **FIGS. 10 and 11**, are well suited to the polar arrangement of EVO **220**.

[**0050**] Optical elements **224** may be addressed by an electrode-addressing scheme, such as the concentric ring scheme **240** illustrated in **FIG. 5B**. Using concentric ring scheme **240**, controller **112** (**FIG. 1**) can be operatively configured to control reflective elements **224** in such a manner that certain tilt angles α' (**FIG. 4**) are induced into

Giesecke+Devrient GmbH,
Giesecke+Devrient Currency Technology GmbH,
and Papierfabrik Louisenthal GmbH. - Ex. 1038

the respective elements in radial zones RZ1-RZ3 by applying different voltages to the different zones so as to approximate a spherical reflector, such as spherical reflector **244**. Referring to **FIG. 4**, for a spherical reflector, tilt angle α' (relative to a horizontal axis in this case) is determined by the following equation:

$$\alpha'=\tan^{-1}(d/r)$$

[**0051**] wherein "d" is the radial distance of the corresponding respective radial zone RZ1-RZ3 from the central focal axis and "r" is the desired equivalent radius of curvature of EVO **220**. It is noted that a similar scheme could be used to drive EVO **220** so as to approximate a parabolic reflector, such as in **FIG. 3**, if desired. The difference would be in the tilt angles α' and in the equation used to determine the tilt angles (which, for a parabolic reflector, can be more appropriately related to focal length than to radius of curvature). In fact, by extension, a reflective optical surface of practically any shape can also be approximated in this manner, including gratings and even unusual surfaces that cannot be readily fabricated monolithically. Of course, even though rotationally symmetric arrays have been illustrated and discussed, those skilled in the art will recognize that the same concepts are applicable to arrays that are portions of such rotationally symmetric arrangements. Thus, for example, an EVO containing only optical elements above the Z-axis in FIGS. **3** and/or **5**A could approximate the well-known off-axis parabolic mirror.

[**0052**] When the relative magnitude of tilt angle α' (or a function thereof, such as tan α') of each element is proportional to a voltage applied thereto, an example of the voltage control of EVO **220** is as follows. If a voltage V_i is applied to all optical elements **224** in radial zone RZ located at distance d_i from central focal axis **248**, and if the array is so constructed that this voltage produces a tilt angle α'_i for each of those elements such that each element in zone RZ1 directly faces point C on the central focal axis of **FIG. 4**, then the elements of zone RZ1 form a Fresnel-type reflector having an equivalent spherical radius r, where:

$$r=d_i/(\tan \alpha'_i) \quad \{2\}$$

[**0053**] Adjusting voltage V_i applied to corresponding respective radial zones RZ1, RZ2, RZ3 drives optical elements **124** in each zone to the appropriate tilt angles α'_i so as to produce the equivalent spherical radius r.

[**0054**] If EVO **220** is constructed such that tan α'_i is directly proportional to voltage V_i according to the equation $\tan \alpha'_i=k(V_i)$, where k is a proportionality constant, then the voltage required for radial zone RZ1 will also be directly proportional to d_i; in fact, $\tan \alpha'_i=k(V_i)=d_i/r$. Alternatively, if the angle α'_i is itself directly proportional to voltage V_i, such that $\alpha'_i=k(V_i)$, then the zonal voltage pattern V_i (d_i) as a function of d_i should be defined to vary with $\tan^{-1}(d_i/r)$ according to $k(V_i)=\tan^{-1}(d_i/r)$. One of these patterns may be easier to implement than the other in a particular driving scheme, but either of them or any other single-valued function may be substituted to accommodate specific array and/or electronics characteristics without compromising the essence of the invention.

[**0055**] Once the concept of producing an EVO having a desired equivalent spherical radius of curvature r (or equivalently, a desired focal length f) is understood, it is a simple matter to modify the voltage pattern to produce other values of r (and therefore different effective focal lengths) in the same EVO. The fact that this optical power may be varied extremely rapidly is an important feature for creating 3D images from rapidly varying 2D displays, among other applications.

[**0056**] Of course, similar concepts apply to non-spherical equivalent shapes without loss of generality. Furthermore, non-polar EVOs are also possible, though potentially more complex and expensive.

[**0057**] **FIG. 6** illustrates a 3D floating image projector **260** of the present invention that includes a housing **264** that contains a variable focus system **268** similar to variable focus system **100** of **FIG. 1**. Image projector **260** may be desirable over other floating image projectors disclosed herein, e.g., projectors **500**, **600** of **FIGS. 14 and 17**, in certain applications due to its relative ease of fabrication. This ease of fabrication is due, in part, to the folding of the optical path within housing **264** that allows EVO **272** of projector **260** to be relatively small and planar, as opposed to large and curved. These two characteristics of EVO **272** can significantly reduce the cost of the entire 3D floating image projector **260**, particularly when the EVO is the highest cost component of the projector. Optionally, if EVO **272** is embodied as a beamsplitter-type rather than solely a reflector-type, projector **260** may include a secondary image source **276**. In an embodiment utilizing secondary image source **276**, the image(s) provided by the secondary image source may, e.g., be projected onto a single secondary image plane IPS floating in free space, while the primary image planes IP1', IP2', IP3', of the 3D image formed from primary image source **280** may be projected in front of and/or behind the secondary image plane.

[**0058**] As mentioned above, 3D floating image projector **260** of **FIG. 6** allows EVO **272** to be formed on a relatively small substrate having a planar surface, thereby making it easier to produce. Planar EVO **272** may be used together with a conventional curved optic **284**, which may be a conventional fixed-focus optic, to produce a very significant 3D image depth (ID). An example is discussed below in which image depth ID is about 2 inches, more or less, depending on the specific application, while keeping the range of tilt angles of the optical elements (not shown) of EVO **272** within a relatively narrow range, e.g., within ±3°. Of course, as those skilled in the art will readily appreciate, the configuration of 3D floating image projector **260** may be optimized for larger or smaller EVO arrays and/or for greater or lesser image depths with other optical element tilt angle ranges. In this type of configuration, for a desired combined optical power, the required range of tilt angles for the optical elements typically decreases as the size of the array increases (thereby making EVO **272** easier to fabricate), and vice-versa. The optical designer must achieve an optimum balance of this property against the required image quality, size, viewing angle, cost and other factors, of 3D floating image projector **260**.

[**0059**] The angle through which each optical element tilts is generally an important parameter. Although a large available angle would permit a very wide range of optical powers to be achieved, in the context of MEMS and similar technologies, the integrity of the EVO array could be impacted if the empty space required in the microlayers used to form the array should become too large. Furthermore, too large an

Giesecke+Devrient GmbH,
Giesecke+Devrient Currency Technology GmbH,
and Papierfabrik Louisenthal GmbH. - Ex. 1038

angle could necessitate undesirably expensive control nonlinearity, and/or could result in less precise or more expensive angular control. Thus, a relatively small angle, e.g., no more than a few degrees, may be desirable, depending on the size of the microelement. For example, a nominal magnitude up to ±5° may be reasonable for optical elements having diameters not exceeding a few tenths of a millimeter, and even smaller angles might be more appropriate for significantly larger elements. A designer should take these limitations into account when designing an EVO of the present invention.

[**0060**] An advantage of a curved EVO, such as EVO **300** shown in **FIG. 7**, is that the angular variation of the optical elements required to achieve a desired variation in focal length is thereby reduced tremendously, because the curvature of substrate **304** provides the bulk of the optical power. This makes macroscopically useful power variations feasible on a single substrate. Similarly, in the embodiment of **FIG. 6**, curved optic **284**, which is separated from EVO **272** in a manner similar to that employed in a Petzval or telephoto lens configuration, provides the bulk of the total optical power. This retains the advantage of needing only weak power (and consequently small tilt angles) on EVO **272**, while nevertheless providing a substantial variation in the optical power of the combination.

[**0061**] Following is a description of a specific example of 3D floating image projector **260** of **FIG. 6** provided to illustrate in further detail various aspects of the present invention. In this example, EVO **272** is located 7 inches (17.78 cm) from image source **280** and 24 inches (60.96 cm) from curved optic **284**, which has radius of curvature of 31 inches (78.74 cm). Accordingly, the nominal floating image position (IP**2**') (i.e., with the EVO set as a flat mirror) is 31 inches (78.74 cm) from the vertex of the curved optic. Other floating image positions may be created simply by varying EVO **272**. For example, by changing its effective equivalent spherical radius r from flat (i.e., r=∞) to r=100 inches (254 cm) (convex, as a diverging mirror), the image position (IP**3**') would be located 0.91 inches (2.31 cm) further from curved optic **284** than the nominal 31 inches (78.74 cm). Similarly, by changing the effective equivalent spherical radius r of EVO **272** to −100 inches (−254 cm) (concave, as a converging mirror), the image position (IP**1**') would be located 1.06 inches (2.69 cm) closer to curved optic **284** than the nominal 31 inches (78.74 cm). If the active area of EVO **272** is 7 inches×8 inches (17.78 cm×20.32 cm), then the maximum tilt angle (at the corners) of the elements of the EVO array is $\alpha'=\pm 3.042°$, and the other elements would tilt correspondingly less in conformance with the equation $\alpha'=\pm\tan^{-1}(d_i/100)$, where d_i is the distance of the element from the EVO axis expressed in inches.

[**0062**] In this example, a simple image region **288** containing the three image planes IP**1**', IP**2**', IP**3**' mentioned above can be imagined, with the center plane IP**2**' located at the nominal image plane (EVO **272** in a flat configuration), the front plane IP**3**' located 0.91 inches (2.31 cm) closer to viewer **292** (effective equivalent spherical radius r=100 inches (254 cm)), and the rear plane IP**1**' located 1.06 inches (2.69 cm) behind the nominal image plane (effective equivalent spherical radius r=−100 inches (−254 cm)), for a total image depth ID of 1.97 inches (5.00 cm). (This example ignores optional additional image source **276** shown in **FIG. 6**.) If each element in the optical element array of EVO **272** is capable of tilting to a tilt angle α' up to ±3.042° from its nominal flat orientation by the application of a voltage difference, and if the control function to create the tilt α'_i at any zonal region i is given by the equation:

$$V_i=10\tan\alpha'_i \qquad \{3\}$$

[**0063**] wherein V_i is voltage in volts for zonal region i, then the maximum voltage difference required to produce the full ±3.042° deflection at the corners of the rectangular EVO array is ±531.5 millivolts. The other elements then require correspondingly lower voltages in conformance with Equations {3} and {2}, above. Of course, other equations may apply if the particular construction of EVO **272** requires higher voltages and/or a nonlinear voltage pattern to achieve the desired angular tilts in each zone. It is noted that effective equivalent spherical radius r is not restricted only to the three values −100 inches, ∞, and +100 inches, but may take on any desired value larger than ±100 inches in this example, thereby producing images at any desired plane within the 1.97 inch (5.00 cm) image depth ID of image region **288**.

[**0064**] A control methodology for creating 3D images from a series of 2D images by means of projecting 2D images with the aid of EVO **272** is to synchronize the EVO to image source **280** such that when the image source displays a 2D image containing the content appropriate to a corresponding one of image planes IP**1**', IP**2**', IP**3**', the EVO is set to the appropriate effective equivalent spherical radius r that projects that 2D image onto that plane. Then, the next 2D image displayed by image source **280** contains content appropriate to the next image plane of planes IP**2**', IP**3**', IP**1**', respectively. When the image source displays the next image, EVO **272** is set to an effective equivalent spherical radius r that produces the image at that next image plane of planes IP**2**', IP**3**', IP**1**', and so forth, throughout image region **288**. When the last image plane IP**3**' of image region **288** is reached, the next image cycles back to first image plane IP**1**'. The foregoing description assumes that the cycle is IP**1**'=>IP**2**'=>IP**3**'=>IP**1**'=>IP**2**' and so on. However, those skilled in the art will appreciate that the order of the focusing of 2D images on image planes IP**1**', IP**2**', IP**3**' may proceed in any order desired as long as each 2D image is projected onto the appropriate respective image plane. For example, alternative focusing orders include IP**3**'=>IP**2**'=>IP**1**'=>IP**2**'=>IP**3**', and so on, and IP**1**'=>IP**2**'=>IP**3**'=>IP**2**'=>IP**1**'=>IP**2**', and so on. However, some orders such as these may be less desirable, as will be discussed later.

[**0065**] One possible control scheme would be to require EVO **272** to remain focused at a single effective equivalent spherical radius r during the entire period that image source **280** displays the corresponding 2D image, then to rapidly transition to the next required effective equivalent spherical radius r between images, remaining at that value for the entire next image. This "square wave" control scheme is illustrated in method **350** of **FIG. 8**. Referring to **FIGS. 6 and 8**, method **350** may be executed by system controller **354** so as to send appropriate timing signals to image source **280** and EVO **272**. It is noted that in this example, image source **280** and EVO **272** are assumed to contain their own drivers (not shown) capable of responding effectively to a timing signal. Of course, in other embodiments, system controller **354** may include the appropriate drivers for driving image source **280** and EVO **272**, such that the signals generated by controller **354** and sent to image source **280** and EVO **272** are control signals rather than timing signals.

Giesecke+Devrient GmbH,
Giesecke+Devrient Currency Technology GmbH,
and Papierfabrik Louisenthal GmbH. - Ex. 1038

Those skilled in the art will understand how to implement the present invention in such alternative control configurations. Regardless of where the drivers for image source **280** and EVO **272** are located, the general principles of method **350** may be used.

[**0066**] At step **358** in **FIG. 8**, system controller **354** sends a first sync pulse to both the respective drivers of image source **280** and EVO **272**. In response to the first sync pulse, at step **362**, the image source driver causes image source **280** to display a 2D image corresponding to image plane IP**1**'. Correspondingly, at step **366**, the EVO driver responds to the first sync pulse by setting EVO **272** to the effective equivalent spherical radius r_1 corresponding to IP**1**' so as to project the 2D image onto image plane IP**1**'. Next, at step **370**, system controller **354** sends a second sync pulse to the image source driver and EVO driver. At step **374**, the image source driver responds to the second sync pulse by causing image source **280** to display a 2D image corresponding to image plane IP**2**'. Correspondingly, the EVO driver responds at step **378** to the second sync pulse by setting EVO **272** to the effective equivalent spherical radius r_2 corresponding to IP**2**' so as to project the 2D image onto image plane IP**2**'. Then, at step **382**, system controller **354** sends a third sync pulse to the image source driver and EVO driver. At step **386**, the image source driver responds to the third sync pulse by causing image source **280** to display a 2D image corresponding to image plane IP**3**'. Correspondingly, the EVO driver responds at step **390** to the third sync pulse by setting EVO **272** to the effective equivalent spherical radius r_3 corresponding to IP**3**' so as to project the 2D image onto image plane IP**3**'. (Here, the subscripts of r refer to different curvature states, not to zones.)

[**0067**] At this point, method **350** may simply loop back to step **358**, whereby the cycles of steps **358-390** are repeated for either the same 2D images if the 3D image is a static image, or, typically, the next frame if the 3D image is dynamic image, such as a video image or movie. It is noted that the source of the 2D images, e.g., a digital image file, may include synchronizing information for ensuring that the 2D images of each 3D frame are displayed with one another on the available image planes, e.g., image planes IP**1**', IP**2**', IP**3**'. Depending upon the design of EVO **272** and the robustness of the control scheme, it may be desirable that system controller **354** generate a flyback frame pulse (step **394**), which causes image source **280** to display a blank flyback frame at step **396** that accounts for what may be a relatively long delay in refocusing EVO **272** from image plane IP**3**' back to IP**1**'. For example, in the example discussed above relative to **FIG. 6**, EVO **272** is required to transition from a concave configuration to a convex configuration when refocusing from image plane IP**3**' back to IP**1**'. Due to the relatively large changes in tilt angles α' required for this transition, and possible additional settling time, providing of a flyback frame may be useful. Generally, providing a flyback frame will typically not be necessary for robust control systems, but rather is illustrated as a way to accommodate less stringent tolerances in lower cost systems. Simultaneously, at step **398**, EVO **272** may be driven to reconfigure to its configuration for focusing at image plane IP**1**'.

[**0068**] Method **350** may be performed within system controller **354** via software **400** that generates the synchronizing pulses that ultimately control image source **280** and EVO **272**. In this connection, software **400** may utilize individual image and/or frame information present within or accompanying the image signal that drives image source **280** for ensuring that each 2D image from the image signal is projected onto the proper image plane. Such information may be, e.g., encoded into an image signal or accompanying audio signal, if any, or provided as a separate unencoded signal present "alongside" the image signal and audio signal, if present. Those skilled in the art will understand how to implement and utilize such image and/or frame information such that a detailed description is not necessary herein.

[**0069**] Method **350** just described is suited to controlling EVO **272** using a square wave voltage signal so as to cause rapid transitions between effective equivalent spherical radii r (or more generally, curved surfaces of focal length f). This would clearly create distinct image planes orthogonal to the projection direction, and would be an excellent approach for implementing the necessary EVO control. However, the need to transition between stable states during the extremely short inter-frame interval could impose a difficult burden on the control electronics, which could then become unduly expensive.

[**0070**] A more cost-effective control scheme for low-cost 3D projectors or displays can be to adjust the effective equivalent spherical radius r (or more generally, curved surface of focal length f) using a voltage signal having a waveform that varies more gradually than a square wave, such as a sawtooth wave, so that the EVO voltage pattern is continuously varied to smoothly adjust the effective equivalent surface curvature throughout the full image region. A sawtooth wave is preferable to a simpler oscillatory function such as a sine wave, because the sawtooth wave can maintain near-constant spatial image separation between the image planes, and because it can maintain nearly identical temporal spacing between successive frame instances of each of the image plane locations. (Thus, with a sawtooth waveform, the time duration between the first and second frame display at image plane IP**1**' can be essentially the same as the time duration between the first and second frame display at plane IP**2**', and so on.) Simple sine wave oscillations of the voltage signal would not exhibit these advantages, and would therefore produce a less desirable 3D image with much more noticeable flicker variation between the image planes, which could be overcome only by increasing the frequency significantly.

[**0071**] As in method **350** discussed above, a flyback period corresponding to a single-frame transition from one extreme of the surface curvature to the other may be used if needed with the sawtooth waveform. Utilizing a continuously variable waveform such as a sawtooth may have a minor impact on the orthogonality of the individual image planes to the projection direction, but it can make the control electronics much more reliable and less costly. Nevertheless, the invention is not limited to a particular type of control scheme.

[**0072**] An alternative refocusing method **410** compatible with projector **260** of **FIG. 6**, or other system containing an EVO of the present invention, and utilizing a sawtooth voltage waveform, is illustrated in **FIG. 9**. In method **410**, image region **414** depicts five image planes IP**1**" through IP**5**" and EVO **272** varies in configuration from a convex shape corresponding to image plane IP**1**" to a concave shape

Giesecke+Devrient GmbH,
Giesecke+Devrient Currency Technology GmbH,
and Papierfabrik Louisenthal GmbH. - Ex. 1038

corresponding to image plane IP5". Those skilled in the art will appreciate that although refocusing method **410** and the detailed example of projector **260** presented above in connection with **FIG. 6** illustrate EVO **272** as transitioning between convex and concave configurations, the EVO does not need to make this complete reversal of curvature. Rather, all configurations of EVO **272** for a particular embodiment of projector **260** may be all concave, all convex, only flat and concave or only flat and convex, depending upon the particular design parameters. For the sake of clarity, only the configuration of EVO **272** and image planes IP1"-IP5" are shown alongside a typical sawtooth waveform **418** representing the voltage applied to the elements in a selected EVO zone (e.g., the outermost). Those skilled in the art will further appreciate that, as previously mentioned, the image planes will actually be somewhat tilted due to the continuous nature of the sawtooth waveform, and that as time progresses, the "lower" (in the figure), i.e. later, spatial portion of any chosen image plane, for example, IP1", will approach the "upper" or initial spatial portion of the following image plane. The "EVO Configuration" and "Image Location" columns in **FIG. 9** are to be interpreted as instantaneous snapshots of conditions at the moment the continuous "Voltage" waveform reaches the value depicted at each dotted line in **FIG. 9**.

[**0073**] As the voltage increases from its negative extreme of waveform **418** through zero to its positive extreme, the configuration of EVO **272** changes from concave to flat to convex, causing the focused image to move from the front image plane IP1" through three intermediate image planes IP2", IP3", IP4" to the rear image plane IP5" of image region **414**. During a flyback period, the voltage rapidly returns to the negative extreme, and the process is repeated as the 2D image from image source **280**, such as a 2D display, are presented to EVO **272** for focusing on the corresponding respective image planes IP1"-IP5". If the period of the waveform **418** is short enough in time (e.g., 30 milliseconds or shorter), the eye perceives all images in image region **414** as appearing simultaneously. Longer periods are less desirable, since they correspond to increased perception of flicker.

[**0074**] When EVO **272** is synchronized to an image source (e.g., image source **280** as in **FIG. 6**) that is sufficiently fast, a large enough number of suitably tailored individual 2D images can be formed throughout image region **414** (equivalent to image region **288** in **FIG. 6**) within the period of waveform **418** to cause the eye to perceive the ensemble as an approximately continuous 3D image. (Five frames per period are depicted in **FIG. 9**, but many more may be envisioned.) Small variations in the content of the image source (which are projected as small variations in the content of the image region **414**) from period to period can then be introduced so as to cause apparent motion in the 3D scene, just as small variations in successive 2D cinematic film or video frames cause the perception of 2D motion.

[**0075**] **FIGS. 10-13** illustrate several different types of optical elements presently contemplated for various embodiments of an EVO of the present invention. **FIG. 10** illustrates a tilting optical element **430** that is tilted using an electrostatic actuator **434**. A tilt axis **436** of optical element **430** is normal to this figure. If optical element **430** has two tilt axes for the reasons discussed above, the other tilt axis (not shown) may lie along a horizontal line extending through tilt axis **436**. Optical element **430** may be composed of a material (e.g., silicon if the element is a reflective element) that is heavily doped to provide it with an electric charge. Accordingly, actuator **434** may include one or more electrodes **440**, **444** affixed to a substrate (not shown), or other support(s) affixed to the substrate, for receiving appropriate electrostatic charges for causing optical element **430** to tilt. For example, by providing electrodes **440**, **444** beneath optical element **430** with equal and opposite voltages, one side of the optical element is attracted to one electrode, while the other side is repelled from the other electrode.

[**0076**] Other schemes are also feasible. For example, the second electrode, e.g., electrode **444**, may be located above optical element **430**, on the same or opposite side of the element, the signs of the voltages may be the same instead of opposite, and if the element material is sufficiently stiff, only a single electrode may be needed, among others. The same concepts, of course, extend to an optical element having two tilt axes. In addition, instead of being pivotable about a central portion, each optical element **430** may be hinged at one end.

[**0077**] Examples of tilting electrostatically actuated optical elements suitable for use in an EVO of the present invention include the micromirror elements disclosed in U.S. Pat. Nos. 4,662,746, 5,061,049, 5,083,857 and 5,600,383 assigned to Texas Instruments, Inc. (TI) and directed to TI's digital light processor (DLP) technology. These TI patents are incorporated by reference herein in their entireties. One alternative to using electrostatic actuators to move optical elements is to use one or more piezoelectric actuators (not shown) that extend between a substrate and each optical element. As those skilled in the art will readily appreciate, as a voltage applied to each piezoelectric actuator varies, the "length" of the actuator, i.e., the dimension of the actuator extending between the substrate and the optical element, changes accordingly. The piezoelectric actuator(s) could then be placed accordingly so that the changes in length cause a change in tilt of the optical element. Other actuator types may also be used without departing from the spirit, scope, and intention of the invention.

[**0078**] **FIG. 11** shows an alternative two-axis tilting-type optical element **450** suitable for use in an EVO of the present invention. Optical element **450** is different from optical element **430** of **FIG. 10** in that optical element **430** of **FIG. 10** is a monolithic optical element, whereas optical element **450** of **FIG. 11** includes three discrete portions, i.e., a central portion **454**, an intermediate portion **456**, and a peripheral portion **458** that supports the central and intermediate portions. Peripheral portion **458** may be, in turn, supported by a substrate, such as substrate **184** described above in connection with **FIG. 3**. Central portion **454** may tilt about axis x, while intermediate portion **456** may tilt about axis y. If intermediate portion **456** supports axis x and peripheral portion **458** supports axis y, the overall effect is that central portion **454** may be tiltable about either or both of axes x and y. If intermediate portion **456** is fully or partially reflective or transparent, then a uniaxial tilt of the intermediate portion may be achieved simultaneously with a dual-axial tilt of central portion **454** to achieve multiple optical effects simultaneously. Alternatively, intermediate portion **456** may be empty (except for axis x which connects portion **454** to portion **458**), or it may be opaque.

Giesecke+Devrient GmbH,
Giesecke+Devrient Currency Technology GmbH,
and Papierfabrik Louisenthal GmbH. - Ex. 1038

[0079] Central portion **454**, intermediate portion **456**, and peripheral portion **458** may be, e.g., non-reflective, diffuse, opaque, reflective, refractive, or transparent. If, e.g., peripheral portion **458** and/or intermediate portion **456** are transparent and central optical portion **454** is reflective, optical element **450** can act as a beamsplitter with a relative reflective/transmission (R/T) efficiency depending on the ratio of the areas of the central optical portion and the transparent portion(s), with any opaque, diffuse or non-reflective portion representing a loss. Conversely, if peripheral optical portion **458** is opaque and intermediate portion **456** is opaque, transparent, or otherwise non-reflective while central portion **454** is reflective, optical element **450** would be a mirror, and it would be advantageous to make the fill factor (i.e., the relative area of the central portion to the total area of all three portions) as high as feasible. If, e.g., one of peripheral portion **458** or intermediate portion **456** reflective while the other is transparent, and central optical portion **454** is also reflective, optical element **450** becomes a new type of beamsplitter, with the reflective portions reflecting in different directions. By appropriately controlling the tilt angles of a plurality of reflective optical elements **450** while in an array (see, e.g., **FIG. 2**), an EVO may be made into a reflective mirror having two or even three focal lengths (see, e.g., **FIG. 3**) simultaneously with one another. For example, one focal length defined by the plurality of central portions **454** in the array could be electrically variable, while another focal length defined by the plurality of peripheral portions **458** could be fixed, e.g., when the array is mounted on a curved substrate. An additional variable cylindrical (or toric, on a curved substrate) focal length could also be defined by the plurality of intermediate portions **456**. Such a multi-powered optic could, e.g., be used to make the same image appear to reside in multiple image planes at once. This capability can be further amplified or otherwise refined by subsequent optical re-imaging.

[0080] **FIGS. 12 and 13** show, respectively, two optical elements **460**, **480** that are alternatives to the tilting-type optical elements **430**, **450** described above in connection with **FIGS. 10 and 11**. Rather than being of the flat tilting, i.e., pivoting, hinged or gimbaled, type discussed above, optical elements **460**, **480** of **FIGS. 12 and 13** may be characterized as flexible optical elements, since one end **462**, **482** of each optical element is fixed relative to a substrate (not shown) and one end **464**, **484** of optical elements **460**, **480** is free to move, within certain limits, in a direction toward and away from the substrate. Optical elements **460**, **480** are generally similar to the flexible elements disclosed in U.S. Pat. Nos. 6,317,108, 6,057,814, 3,989,357 and 3,897,997. Therefore, these patents are incorporated by reference herein in their entireties.

[0081] Referring particularly to **FIG. 12**, optical element **460** includes a flexible electrode **466** that may be charged with an electrical field, e.g., by a charging circuit (not shown). Details of forming flexible electrode **466** are discussed in one or more of the foregoing patents and, therefore, need not be described in detail. However, as is now described, flexible electrode **466** may be controlled in substantially continuous analog manner allowing multiple states, rather than in the digital two-state "on/off" manner envisioned in the foregoing patents. A fixed actuator electrode **468** is fixed relative to the substrate and is charged with an electrical field, e.g., by a charging circuit, so as to attract or repel free end **464** of flexible electrode **466** to change the position of the free end. Flexible optical electrode **466** may be moved to a plurality of discrete flex angles by controlling the electrical field strength between the flexible optical electrode and fixed electrode **468**. The result of varying this field strength is to cause flexible electrode **466** to flex to a stable flex angle, wherein the precise flex angle depends on the precise voltage difference between electrodes **466**, **468**.

[0082] If optical element **460** is a reflective electrode, e.g., wherein one of surface **470**, **472** of flexible electrode acts as a mirror or is provided with one or more coatings that make flexible electrode **466** reflective, the change in position of free end **464** of the flexible electrode is generally equivalent to the tilting of optical elements **164**, **224**, **430**, **450** of **FIGS. 2-4**, **10** and **11**, respectively. That is, when a plurality of optical elements **460** are arranged to form an EVO, e.g., EVO **160** of **FIG. 2**, the focal length of the EVO may be changed by suitably varying the electrical fields in the corresponding fixed electrodes **468** and/or corresponding flexible electrodes **466** to cause each optical element, for example, to reflect rays incident that optical element to a common focal plane.

[0083] Fixed electrode **468** may be any suitable shape, such as the cylindrical shape shown. A simple example of a reflective-type flexible optical electrode comprises a resilient polymer electrode that is metal-coated on at least one of surface **470**, **472**. In this connection, depending upon a particular application and materials of construction, either surface **470**, **472** of flexible electrode **466** may generally face the plurality of focal planes via which a 3D image is generated. That is, fixed electrode **468** may be on either side of flexible electrode **466** relative to the focal planes of the EVO. Flexible optical element **480** of **FIG. 13** is similar to optical element **460** of **FIG. 12**, except that flexible electrode **486** is fixed at one end to fixed electrode **488** (possibly with an insulating dielectric layer in the connection region), rather than being unattached to the fixed electrode as shown in **FIG. 12**. Similar to tilting optical elements **164**, **224**, **430**, **450** of **FIGS. 2-4**, **10** and **11**, respectively, flexible optical elements **460**, **480** of **FIGS. 12 and 13** may be actuated, preferably by an electrostatic actuator, but alternatively by a non-electrostatic type actuator, such as a piezoelectric actuator (not shown). Such an alternative actuator may extend between each flexible "element"**486** (which may no longer be an electrode) and either the substrate or some other structure fixed relative to the substrate.

[0084] The flex angle through which optical elements **460**, **480** flex between a relaxed state and an active state to provide the resulting EVO with its variable focus feature is an important parameter. A large range of flex angles may be achieved by flexible electrodes **466**, **486**, with sufficient control throughout the range to define multiple individual flex angles with repeatable precision. In the context of the present invention, this can translate into an EVO having a very wide range of addressable focal lengths. However, for optimum control in 3D image display applications where a number of intermediate states between the fully relaxed and fully active states is desirable, a much smaller range of flex angle may be preferable. Such smaller ranges are also compatible with the desired useful depth ranges for 3D images, in which the perceived distance in depth between successive planes may be only a fraction, e.g., 1%-10%, of the image diameter, and in which the total depth range may be comparable to or smaller than the image diameter.

Giesecke+Devrient GmbH,
Giesecke+Devrient Currency Technology GmbH,
and Papierfabrik Louisenthal GmbH. - Ex. 1038

Nevertheless, the larger range of flex angle available with this type of microelement compared with other MEMS elements, combined with the single-axis tilt implementation discussed in connection with **FIG. 5**, can be used to an advantage by a designer when balancing system requirements and performance characteristics. In addition, all other things being equal, the cost of an EVO comprising flexible electrode type optical elements each with a single tilt axis can be less than the cost of an EVO comprising other types of optical elements, especially two-axis elements such as optical elements **164**, **224**, **430**, **450** described above in connection with **FIGS. 2-4**, **10** and **1**, respectively.

[**0085**] Referring again to **FIG. 7**, this figure illustrates reflective optical elements **308** mounted on a curved substrate **304** on the concave surface **312** thereof. This configuration is particularly suitable for providing EVO **300** with a relatively high optical power, i.e., relatively short focal lengths, because the curvature of concave surface **312** can be made to bear the burden of the bulk of the required optical power, while optical elements **308** need only provide the required degree of variability proximate that power to provide EVO **300** with a plurality of effective centers of curvature C, C', C". This potent configuration minimizes the range of angles through which optical elements must move, thereby making inexpensive and highly reliable approaches, such as electrostatic and piezoelectric activation, feasible.

[**0086**] Curved surface **312** is shown without loss of generality as spherical, with its center of curvature at C. As optical elements **308** are moved to their maximum negative tilt angles shown, the effective center of curvature of EVO **300** moves from C to C'. By moving optical elements **308** to their maximum positive tilt angle, the effective center of curvature of EVO **300** moves to C". The size of the variation between centers of curvature C' and C, and C and C" can be a substantial fraction of the radius of curvature C itself, limited only by the practical limits of the maximum negative and positive tilt angles of optical elements **308**. Accordingly, the plurality of image planes (e.g., image planes IP**1**-IP**7** of **FIG. 1**) can fall anywhere from C' to C", with the maximum number of discrete image planes being limited by the tilt angle resolution of optical elements **308**. Of course, as those skilled in the art will appreciate, center of curvature C of concave surface **312** need not be intermediate the minimum and maximum effective centers of curvature C', C". Rather, center of curvature C may be at the lower or upper end of ranges such that tilt angles are only either negative or positive, as the case may be.

[**0087**] Furthermore, those skilled in the art will recognize that the principle illustrated in **FIG. 7** also applies to convex surfaces, as well as to surface shapes other than spherical. For non-spherical shapes, the focal length of the surface may be substituted for the center of curvature, and the foregoing description in regard to **FIG. 7** then applies without loss of generality.

[**0088**] **FIG. 14** illustrates an example of a 3D floating image projector **500** of the present invention that utilizes various capabilities of an EVO **504**. In this embodiment, EVO **504** and an image source **508** may each be mounted within a housing **512**. A controller **516** for controlling EVO **504** and image source **508**, or the EVO alone depending upon the type of image source **508**, may also be mounted within housing **512** to form an integrated system. Alternatively, controller **516** may be external to housing **512**. In the latter, controller **516** may be any type of device capable of sending the appropriate control signals to EVO **504** and/or image source **508** to control these components as described above in connection with **FIGS. 1 and 6**, among others. For example, controller **516** may be a personal computer or a dedicated device containing the appropriate hardware, such as integrated circuits, e.g., microprocessor(s), memory, and appurtenant circuitry, and/or software for controlling EVO **504** and/or image source **508**. Those skilled in the art will readily appreciate the variety of configurations of controller **516** that may be used, such that a lengthy enumeration and description of each is not necessary herein for those skilled in the art to appreciate the scope of the present invention.

[**0089**] In this embodiment, EVO **504** may be, e.g., of a curved reflector type, as discussed above in connection with **FIG. 7**, and positioned within housing **512** and controlled so that projector **500** forms a real image in image region **520** located outside the housing in free space. If image source **508** is a 2D display that displays a plurality of image slices (e.g., image slices IS**1**-IS**7** of **FIG. 1**) in succession to one another in the manner discussed above in connection with **FIG. 1**, controller **516** may control EVO **504** to assemble these image slices into a 3D floating image fixed in free space relative to housing **512**. Alternatively, rather than image source **508** being a display of image slices, it may be a 3D object that is illuminated by an illumination source (not shown). In this case, the three image planes shown, represent three imaging distances (corresponding to three different focal lengths) of EVO **504** at which the 3D object is projected. If the order of projection is, e.g., from IP**1**'" to IP**2**'" to IP**3**'", the real image of the 3D object will appear to viewer **524** to be moving toward him/her. On the other hand, if the order of projection is from IP**3**'" to IP**2**'" to IP**1**'", then the real image of the 3D object will appear to a viewer **524** to be moving away from him/her. Different control of EVO **504** by controller **516** may be used to make the real image of the 3D object to move in directions other than toward and away from viewer **524**, such as in a plane perpendicular to the focal axis shown. This may be accomplished generally by not varying the power of EVO **504**, but rather by varying the focal axis **528** of the EVO **504**. Of course, controller **516** may control both the power and focal axis **528** of EVO **504** to make the real image appear to viewer **524** to move about free space in any direction desired.

[**0090**] This concept of moving an image about in free space to impart to viewer **524** that the image is moving extends to the situation wherein a 3D floating image is created from a plurality of 2D image slices from, e.g., a video display type image source **508**, such as the image source described above in connection with **FIG. 1**. Such moving 3D floating images may be accomplished with more elaborate control of EVO **504** by changing the focus of the EVO not only to create image region **520** containing the image planes, e.g., image planes IP**1**'", IP**2**'", IP**3**'", corresponding to the image slices, but also to move image region **520** relative to housing **512**. Similar to the real image of a 3D object discussed above, 3D floating images created from the image slices may be made to appear to viewer **524** to be moving in any direction relative to viewer **524** by moving image region **520** by varying the power and/or focal axis **528** of EVO **504**.

Giesecke+Devrient GmbH,
Giesecke+Devrient Currency Technology GmbH,
and Papierfabrik Louisenthal GmbH. - Ex. 1038

[0091] As those skilled in the art will appreciate, the image characteristics and control capabilities discussed above in connection with the configuration of **FIG. 14** apply as well to that of **FIG. 6** and other image forming systems that include an EVO component.

[0092] **FIGS. 15 and 16** illustrate two alternative image projectors **540** and **560**, respectively, in which either a curved or flat EVO may be used to form floating images. Projector **540** of **FIG. 15** incorporates a planar beamsplitter **544** and a curved optic **548**. In this embodiment, each image (not shown) from image source **556** is reflected from beamsplitter **544** to curved optic **548** and then is reflected from the curved optic and transmitted through the beamsplitter so that it forms image **552**, which may be a 3D image as described above. The EVO of projector **540** may be incorporated into either the concave surface **558** of curved optic **548** or into beamsplitter **544**, although the curved optic may be preferable in embodiments wherein the beamsplitter forms a relatively large angle with respect to the focal axis of the curved optic.

[0093] The embodiment of **FIG. 16** similarly includes a planar beamsplitter **564** and a curved optic **568**. In this case, however, curved optic **568** also is a beamsplitter, allowing the image source to be located along the focal axis of curved optic **568**. In this embodiment, other optical elements (not shown), such as beamsplitters, quarter-wave retarders, polarizers, dual brightness enhancement film (DBEF), and/or other polarization components, may be used to suppress extraneous images. In this form, an EVO can easily be incorporated into beamsplitter **564**, although it may be incorporated into curved optic **568**, if desired. U.S. Pat. No. 6,262,841 to Dike describes an arrangement of optical elements that includes a DBEF to suppress unwanted images, and U.S. Pat. No. Re. 27,356 to La Russa describes an arrangement of optical elements that does not include a DBEF to suppress unwanted images. Those skilled in the art would readily be able to adapt the optical systems shown in the Dike and La Russa patents, as well as improvements thereon, to an optical system utilizing an EVO of the present invention to suppress unwanted images. Therefore, the Dike and La Russa patents are incorporated herein by reference in their entireties.

[0094] **FIG. 17** shows a 3D floating image projector **600** in which a beamsplitter-type EVO **604** provides a scanning mirror rather than a variable optical power Fresnel-type optic. In this embodiment, the array of optical elements (not shown) of EVO **604**, such as the array shown in **FIG. 2**, is not controlled in a manner that provides the EVO with variable focal lengths, but rather is controlled so that the image(s) from each of a plurality of image sources, e.g., image sources **608**, **612**, **616**, are reflected in rapid succession to a curved optic **620**, which may be a conventional curved mirror, or the like. Curved optic **620** then reflects these images through beamsplitting EVO **604** and onto corresponding image planes IP1"", IP2"", IP3"". Image planes IP1"", IP2"", IP3"" are spaced from one another by virtue of image sources **608**, **612**, **616** being located at different distances from a central point P on EVO **604**. Thus, in this embodiment, EVO **604** acts as a variable mirror (and a beamsplitter) that approximates three conventional planar beamsplitters (not shown) that would otherwise be required to direct the image(s) from each image source **608**, **612**, **616** along the focal axis **624** of curved optic **620**. To allow EVO **604** to reflect the images from the various image sources **608**, **612**, **616** (not shown) along focal axis **624**, all of the optical elements of EVO **604** may be actuated simultaneously with one another, each by exactly the same amount and in the same direction as one another (for example), to provide a reflected beam in the required directions. Thus, EVO **604** acts as an extremely rapid scanning mirror, even though it may be relatively large in size. Of course, this type of EVO scanner has many applications apart from the 3D imaging application shown here. One simple example would be as a scanning or tracking mirror; e.g., in solar collectors (for slow tracking) or in rapid scanners of large size that would not be feasible with conventional mirrors.

[0095] EVO **604** of **FIG. 17** may optionally be controlled to provide a multiple-direction reflector that reflects two separate images spaced from one another along a common axis, such as focal axis **624** of curved optic **620**, simply by tilting selected optical elements (not shown) (e.g., alternate rows or columns, or a checkerboard pattern for a two-directional reflector) at different angles at the same time. While three image sources **608**, **612**, **616** are shown in **FIG. 17** for purposes of illustration, it is to be appreciated that the present invention encompasses different numbers of sources. Also, while multiple image sources **608**, **612**, **616** may be used, alternatively a single image source may be used. With a similar variation in the effective reflection angles of beamsplitting EVO **604**, a satisfactory 3D image may be created with a single image source. For example, a single image source may be controlled so that regions of the single image source are illuminated in synchronization with corresponding states of EVO **604**, while the non-corresponding regions would be un-illuminated, e.g., in a "zero-black" mode.

[0096] As mentioned above, a variable focus EVO of the present invention has many more practical applications than only the 3D imaging systems discussed above. In fact, an EVO of the present invention may be used in practically any application wherein it is desired or necessary to converge and/or diverge electromagnetic energy at two or more focal lengths and/or along two or more focal axes in succession with one another. For example, **FIG. 18** shows an example of a compound lens **640** containing a conventional fixed optic **644** in conjunction with an EVO **648** of the present invention. In **FIG. 18**, the nominal focal point NFP of fixed optic **644** (analogous to the conventional reflective optic of **FIG. 6**) is moved closer (NFP') or further (NFP") by a very weak power change in EVO **648** (analogous to the reflective EVO). If the latter has converging power, the configuration is like a weak Petzval lens; if diverging, the combination is like a weak telephoto lens. **FIG. 18** is to be understood as a refractive-analogue schematic showing the use of an EVO in conjunction with a conventional fixed optic. It depicts essentially the same concept shown earlier in **FIG. 6**, but in **FIG. 18** the optical power variation is illustrated in a simpler and more easily grasped form, in which for convenience the EVO power is shown as refractive, although it may in reality be reflective, implying a reversal in subsequent light ray direction. Of course, for finite conjugates, "image plane" may be substituted for "focal plane".

[0097] As an example of the EVO's almost unlimited range of applications other than 3D imaging, another use of an EVO of the present invention is for a headlight of an automobile or other vehicle. In this application, an EVO of

Giesecke+Devrient GmbH,
Giesecke+Devrient Currency Technology GmbH,
and Papierfabrik Louisenthal GmbH. - Ex. 1038

the present invention may be used to vary the divergence of the light beam emanating from the headlight and/or directing the beam in the direction the vehicle is being steered. The divergence of the light beam may be, e.g., varied as a function of vehicle speed. For example, at relatively low speeds the divergence of the beam may be relatively large so as to illuminate a wide path close to the vehicle, whereas at higher speeds, the divergence may be smaller so as to better illuminate distant objects. Likewise, flashlights and other types of illuminating devices may benefit from the incorporation of an EVO therein. Other uses of EVOs of the present invention may include their incorporation in electrically variable zoom lenses, autofocus systems, and variable-focus antennas for receiving and/or transmitting radio, microwave or other frequency signals, as well as their use as replacements for vision-testing instruments such as phoropters. Once those skilled in the art understand the basic operation of an EVO of the present invention as discussed above, they will appreciate the variety of applications in which an EVO can be used.

[**0098**] Although the invention has been described and illustrated with respect to several exemplary embodiments thereof, it should be understood by those skilled in the art that the foregoing and various other changes, omissions and additions may be made therein and thereto, without parting from the spirit and scope of the present invention defined by the appended claims.

What is claimed is:

1. A variable focus system, comprising:

(a) an optic that includes a plurality of movable optical elements; and

(b) a controller coupled to said optic, said controller generating at least a first signal and a second signal, said first signal causing at least some of said plurality of optical elements to move so as to provide said optic with a first focal configuration and said second signal causing at least some of said plurality of optical elements to move so as to provide said optic with a second focal configuration different from said first focal configuration.

2. A variable focus system according to claim 1, wherein each one of said plurality of movable elements is essentially only a reflector.

3. A variable focus system according to claim 1, wherein each one of said plurality of movable elements is essentially only a refractor.

4. A variable focus system according to claim 1, wherein each one of said plurality of movable elements is a beamsplitter.

5. A variable focus system according to claim 1, wherein each one of said plurality of optical elements is a microelement.

6. A variable focus system according to claim 1, wherein at least one of said plurality of movable elements comprises at least two optical components each having an optical property different from the other, each said optical property being selected from the group consisting of reflection, refraction, beamsplitting, opacity and transparency.

7. A variable focus system according to claim 1, wherein said optic is a MEMS optic.

8. A variable focus system according to claim 1, wherein each one of said plurality of movable optical elements moves by tilting.

9. A variable focus system according to claim 1, wherein each one of said plurality of movable optical elements moves by flexing.

10. An electrovariable optic comprising an optic in a variable focus system according to claim 1, wherein said first signal and said second signal are electrical signals.

11. A system for projecting a plurality of 2D images onto a plurality of corresponding respective image planes, comprising:

(a) at least one image source providing a plurality of 2D images;

(b) an electrovariable optic reconfigurable to focus each one of said plurality of 2D images onto a plurality of corresponding respective image planes; and

(c) a controller coupled with said at least one image source and said electrovariable optic, said controller controlling said at least one image source and said electrovariable optic so as to focus each one of said plurality of 2D images onto said plurality of corresponding respective image planes.

12. A system according to claim 11, wherein each one of said plurality of 2D images is an image slice of a 3D image and said controller controls said electrovariable optic so as to focus said plurality of 2D images onto said plurality of corresponding respective image planes, thereby generating said 3D image thereon.

13. A system according to claim 11, wherein said controller controls said electrovariable optic so as to focus said plurality of 2D images onto said plurality of corresponding respective image planes such that said plurality of 2D images appear to be moving among said plurality of corresponding respective image planes.

14. A system according to claim 11, wherein said at least one image source is a video display.

15. A system according to claim 11, wherein said at least one image source is a digital image device.

16. A system according to claim 15, wherein said digital image device comprises a digital light processor.

17. A system according to claim 15, wherein said digital image device is a gated light valve.

18. An electrovariable optic having a plurality of focal configurations, comprising:

(a) a substrate; and

(b) a plurality of optical elements arranged in concentric arcs, each of said plurality of optical elements mounted on said substrate and movable with respect to said substrate such that each of said plurality of optical elements is movable to a plurality of orientations corresponding to the plurality of focal configurations.

19. An electrovariable optic according to claim 18, wherein said concentric arcs form concentric rings.

20. An electrovariable optic according to claim 18, wherein said substrate has a planar surface and each of said plurality of optical elements is mounted to said substrate on said planar surface.

21. An electrovariable optic according to claim 18, wherein said substrate has a curved surface and each of said plurality of optical elements is mounted to said substrate on said curved surface.

Giesecke+Devrient GmbH,
Giesecke+Devrient Currency Technology GmbH,
and Papierfabrik Louisenthal GmbH. - Ex. 1038

22. An electrovariable optic according to claim 18, wherein each of said plurality of optical elements is pivotable with respect to said substrate.

23. An electrovariable optic according to claim 18, wherein each of said plurality of optical elements includes a flexible electrode that flexes to achieve said plurality of orientations.

24. An electrovariable optic according to claim 18, wherein each of said plurality of optical elements is a MEMS device.

25. An electrovariable optic according to claim 18, wherein at least some of said plurality of optical elements are reflectors.

26. An electrovariable optic according to claim 25, wherein said reflectors are micromirrors.

27. An electrovariable optic according to claim 18, wherein at least some of said plurality of optical elements are beamsplitters.

28. An electrovariable optic according to claim 18, wherein at least some of said plurality of optical elements are refractors.

29. An electrovariable optic according to claim 18, wherein at least one of said plurality of optical elements comprises at least two optical components each having an optical property different from the other, each said optical property being selected from the group consisting of reflection, refraction, beamsplitting, opacity and transparency.

30. An electrovariable optic according to claim 18, wherein said concentric arcs are circular.

31. An electrovariable optic having a plurality of focal configurations, comprising:

(a) a substrate having a curved surface; and

(b) a plurality of optical elements each mounted on said substrate at said curved surface and movable with respect to said substrate such that each of said plurality of optical elements is movable to a plurality of orientations corresponding to the plurality of focal configurations.

32. An electrovariable optic according to claim 31, wherein each of said plurality of optical elements is pivotable with respect to said substrate.

33. An electrovariable optic according to claim 31, wherein each of said plurality of optical elements includes a flexible electrode that flexes to achieve said plurality of orientations.

34. An electrovariable optic according to claim 31, wherein each of said plurality of optical elements is a MEMS device.

35. An electrovariable optic according to claim 31, wherein at least some of said plurality of optical elements are reflectors.

36. An electrovariable optic according to claim 35, wherein said reflectors are micromirrors.

37. An electrovariable optic according to claim 31, wherein at least some of said plurality of optical elements are beamsplitters.

38. An electrovariable optic according to claim 31, wherein at least some of said plurality of optical elements are refractors.

39. An electrovariable optic according to claim 31, wherein at least one of said plurality of optical elements comprises at least two optical components each having an optical property different from the other, each said optical property being selected from the group consisting of reflection, refraction, beamsplitting, opacity and transparency.

40. An electrovariable optic according to claim 31, wherein said plurality of optical elements are arranged in concentric arcs.

41. An electrovariable optic according to claim 40, wherein said concentric arcs form rings.

42. A system, comprising:

(a) an electrovariable optic having a plurality of focal configurations, comprising:

(i) a substrate;

(ii) a plurality of optical elements each movably attached to said substrate; and

(iii) a plurality of actuators each corresponding to a corresponding one of said plurality of optical elements for moving that one of said plurality of optical elements; and

(b) a controller operatively coupled to said plurality of actuators so as to move said plurality of optical elements to provide said electrovariable optic with said plurality of focal configurations.

43. A system according to claim 42, wherein said plurality of focal configurations corresponds to a plurality of image planes.

44. A system according to claim 43, wherein said plurality of image planes are located in free space.

45. A system according to claim 42, wherein said controller changes between ones of said plurality of focal configurations at least 30 times a second.

46. A system according to claim 42, wherein said plurality of focal configurations correspond to a plurality of image planes, the system further comprising an image source for providing a plurality of images to said electrovariable optic for projection onto said plurality of image planes.

47. A system according to claim 42, wherein each of said plurality of images is an image slice of a 3D image that said electrovariable optic projects onto a corresponding one of said plurality of image planes.

48. A system according to claim 42, wherein said controller changes said electrovariable optic among said plurality of focal configurations at a first rate and said image source provides said plurality of images at a second rate, said controller synchronizing said first and second rates with one another.

49. A system according to claim 42, wherein said plurality of images form a 3D video image.

50. A system according to claim 42, wherein said image source is a video monitor.

51. A system according to claim 50, wherein said video monitor is a computer monitor.

52. A system according to claim 42, wherein each of said plurality of optical elements includes a flexible electrode.

53. A system according to claim 42, wherein each of said plurality of optical elements is pivotable relative to said substrate about a pivot axis.

54. A system according to claim 42, wherein each of said plurality of optical elements is pivotable relative to said substrate about two pivot axes mutually orthogonal to one another.

55. A system according to claim 42, wherein each of said plurality of actuators comprises at least one electrode fixed relative to said substrate.

Giesecke+Devrient GmbH,
Giesecke+Devrient Currency Technology GmbH,
and Papierfabrik Louisenthal GmbH. - Ex. 1038

56. A system according to claim 42, wherein each of said plurality of actuators comprises a piezoelectric actuator.

57. A system, comprising:

(a) an electrovariable optic having a plurality of focal configurations and comprising a plurality of flexible electrodes that each include a flexible optical element; and

(b) a controller operatively coupled to said plurality of flexible electrodes so as to flex or extend said plurality of flexible electrodes to move each flexible optical element to provide said electrovariable optic with said plurality of focal configurations.

58. A system according to claim 57, wherein each flexible optical element is a mirror.

59. A system according to claim 57, wherein each flexible optical element is a refractor.

60. A system according to claim 57, wherein each flexible optical element is a beamsplitter.

61. A system according to claim 57, wherein at least one of said plurality of movable elements comprises at least two optical components each having an optical property different from the other, each said optical property being selected from the group consisting of reflection, refraction, beam-splitting, opacity and transparency.

62. An electrovariable optic having a plurality of focal configurations, comprising:

(a) a substrate; and

(b) a plurality of flexible electrode optical elements arranged in concentric arcs, each of said plurality of flexible electrode optical elements mounted on said substrate and movable with respect to said substrate such that each of said plurality of flexible electrode optical elements is movable to a plurality of orientations corresponding to the plurality of focal configurations.

63. A device, comprising:

(a) an electrovariable optic including a plurality of movable optical elements and having a plurality of focal configurations; and

(b) a controller operatively configured to control the movement of each of said plurality of movable optical elements so as to focus said electrovariable optic at each of said plurality of focal configurations.

64. A device according to claim 63, further including a conventional optic.

65. A device according to claim 63, further comprising at least one image source for providing a plurality of images to said electrovariable optic.

66. A device according to claim 65, wherein said image source is a video monitor.

67. A method of forming a first image using an optic that includes an array of movable optical elements and has a plurality of focal configurations, comprising the steps of:

(a) providing a second image comprising a plurality of image slices to the optic; and

(b) moving at least some of the movable optical elements in said array substantially simultaneously with one another so as to focus said second image at an image location corresponding to a respective one of the plurality of focal configurations.

68. A method of controlling an optic that includes an array of movable optical elements, comprising the step of:

(a) moving at least some of the movable optical elements in the array substantially simultaneously with one another so that the array of movable optical elements has a first focal point; and

(b) moving at least some of the movable optical elements in the array substantially simultaneously with one another so that the array of movable optical elements has a second focal point spaced from said first focal point.

69. A method according to claim 68, wherein the time between steps (b) and (a) is no greater than one-tenth of a second.

70. A method according to claim 69, wherein the time between steps (b) and (a) is no greater than one one-hundredth of a second.

71. A method according to claim 68, further comprising a step (c) of moving at least some of the movable optical elements in the array substantially simultaneously with one another so that the array of movable optical elements has a third focal point spaced from each of said first and second focal points.

72. A method according to claim 71, wherein said first, second and third focal points lie along a linear line.

73. A method of controlling an electrovariable optic so as to display a series of images at a plurality of corresponding respective image planes spaced from one another, comprising the steps of:

(a) generating a first signal that causes the electrovariable optic to focus a first image of the series of images onto a first corresponding respective image plane of the plurality of corresponding respective image planes; and

(b) generating a second signal that causes the electrovariable optic to focus a second image of the series of images onto a second corresponding respective image plane of the plurality of corresponding respective image planes.

74. A method according to claim 73, wherein each image of the series of images is presented to the electrovariable optic by at least one image source and said first signal causes the at least one image source to present said first image to the electrovariable optic substantially simultaneously with the focusing of said first image onto said first corresponding respective image plane.

75. A method according to claim 74, wherein said second signal causes the at least one image source to present said second image to the electrovariable optic substantially simultaneously with the focusing of said second image onto said second corresponding respective image plane.

76. A computer readable medium on which is stored a program for controlling an electrovariable optic so as to display a series of images at a plurality of corresponding respective image planes spaced from one another, the program comprising instructions that, when executed by a computer, perform the steps of:

(a) generating a first signal that causes the electrovariable optic to focus a first image of the series of images onto a first corresponding respective image plane of the plurality of corresponding respective image planes; and

Giesecke+Devrient GmbH,
Giesecke+Devrient Currency Technology GmbH,
and Papierfabrik Louisenthal GmbH. - Ex. 1038

(b) generating a second signal that causes the electrovariable optic to focus a second image of the series of images onto a second corresponding respective image plane of the plurality of corresponding respective image planes.

77. A computer readable medium according to claim 76, wherein each image of the series of images is presented to the electrovariable optic by at least one image source and said first signal causes the at least one image source to present said first image to the electrovariable optic substantially simultaneously with the focusing of said first image onto said first corresponding respective image plane.

78. A computer readable medium according to claim 77, wherein said second signal causes the at least one image source to present said second image to the electrovariable optic substantially simultaneously with the focusing of said second image onto said second corresponding respective image plane.

79. A computer readable signal in which is contained a program for controlling an electrovariable optic so as to display a series of images at a plurality of corresponding respective image planes spaced from one another, the program comprising instructions that, when executed by a computer, perform the steps of:

(a) generating a first signal that causes the electrovariable optic to focus a first image of the series of images onto a first corresponding respective image plane of the plurality of corresponding respective image planes; and

(b) generating a second signal that causes the electrovariable optic to focus a second image of the series of images onto a second corresponding respective image plane of the plurality of corresponding respective image planes.

80. A computer readable signal according to claim 79, wherein each image of the series of images is presented to the electrovariable optic by at least one image source and said first signal causes the at least one image source to present said first image to the electrovariable optic substantially simultaneously with the focusing of said first image onto said first corresponding respective image plane.

81. A computer readable signal according to claim 80, wherein said second signal causes the at least one image source to present said second image to the electrovariable optic substantially simultaneously with the focusing of said second image onto said second corresponding respective image plane.

* * * * *

Giesecke+Devrient GmbH,
Giesecke+Devrient Currency Technology GmbH,
and Papierfabrik Louisenthal GmbH. - Ex. 1038