CERTIFICATE OF TRANSLATION ACCURACY

I served as Chief Examiner of the certified court interpreter test for the State of California and as a contract translator and interpreter for various federal agencies through the U.S. Department of State of for more than a decade. I served as an instructor at the University of California at Berkeley and the Middlebury Institute of International Studies at Monterey.

I have more than 30 years of experience translating thousands of technical, legal, and business documents from Korean to English submitted to, among others, judicial authorities in Korea, various U.S. federal courts, the U.S. International Trade Commission (ITC), and the USPTO Patent Trial and Appeal Board (PTAB).

I certify that I translated the following document from Korean into the English language. I also certify that this is a true, correct, and complete translation of the corresponding source text to the best of my knowledge and ability.

I certify under penalty of perjury that the foregoing is true and correct.

Executed this 11th day of May 2023 in the Contra Costa County of the State of California.

By: _____

Alex N. Jo
Member, ATA

(19) Korean Intellectual Property Office (KR)
(12) Gazette of Registered Patents (B1)

(51) 。 Int. Cl
A61N 5/067 (2006.01)

(45) Published: May 17, 2007
(11) Registration No.: 10-0719395
(24) Registered: May 11, 2007

(21) Filed Appl. No.: 10-2005-0112187
(22) Filed: Nov. 23, 2005.
Examination requested: Nov. 23, 2005.
(65) Appl. Publication No.:
(43) Appl. Published:

(73) Patentee: Jeisys Medical Co., Ltd.
Daeryung Techno Tower 8-cha (Suite 307), 481-11, Gasan-dong, Geumcheon-gu, Seoul

(72) Inventor: Dong Hwan Kang
Intervil Apt. No. B04, 742-6, Haengshin 2-dong, Deokyang-gu, Goyang-si, Gyeonggi-do, Korea

(74) *Attorney or Agent*: Jong Pil Lee

(56) Prior Art Search Data
JP05248951A KR1020050102524A

Examiner: Young Min Na

Total number of claims: 3 in total

(54) HIGH-FREQUENCY HANDPIECE FOR WRINKLE REMOVAL

(57) ABSTRACT

The present invention relates to a high-frequency handpiece that can easily treat only the subcutaneous tissue of the skin for wrinkle removal and tissue lifting. which is characterized in that the high-frequency handpiece generates a high frequency after separating the skin and the subcutaneous tissue from each other and inserting the handpiece therebetween, and is provided with a heating part at the end of the handpiece, and insulates all parts except the skin-facing direction of the heating part with an insulating member, so that the heating can be carried out only in the uninsulated skin-facing direction.

In the present invention, a handpiece is inserted between the skin and the subcutaneous tissue to directly perform the procedure, and stable treatment is possible because the radiofrequency does not affect anywhere else at all but the skin-facing direction of the part to be treated.

REPRESENTATIVE DRAWING

Figure 2

What is claimed is:

Claim 1.

A high frequency handpiece for generating high frequencies by separating a skin and subcutaneous tissue from each other and inserting a handpiece therebetween, comprising:

A radiofrequency handpiece for wrinkle removal, wherein the handpiece is provided with a heating part at the end of the handpiece, and all parts, except the skin-facing direction of the heating part, are insulated with an insulating member so that the heating part is heated only in the direction of the uninsulated skin, and a light-emitting member is attached to one side so that the position of the heating part of the handpiece inserted in the skin can be easily discerned even from outside the skin as well.

Claim 2.
Deleted

Claim 3.
A high frequency handpiece for wrinkle removal according to claim 1, wherein the handpiece is further provided with a temperature detection sensor, which blocks the application of the high frequency when the temperature of the skin is detected to be above a set value preset in a main unit and re-applies the high frequency when the temperature is detected to be within the set value.

Claim 4.
A high frequency handpiece for wrinkle removal according to claim 1 or claim 3, wherein one side of the handpiece further comprises a timer.

SPECIFICATION

DETAILED DESCRIPTION OF THE INVENTION

OBJECT OF THE INVENTION

THE TECHNOLOGICAL FIELD OF THE INVENTION AND THE CONVENTIONAL ART IN THE FIELD

The present invention relates to a high-frequency handpiece that facilitates the treatment of only the lower tissues of the skin for wrinkle removal and tissue lifting.

First, a brief description of the human skin, which, as is known, consists of the skin and the underlying subcutaneous tissue, with the stratum corneum acting as a biological barrier to the environment, and the melanocytes, which determine skin color, present in the bottom layer. Furthermore, the underlying subcutaneous tissue provides the main structural support for the skin and is composed primarily of an extracellular protein called collagen.

Said collagen is produced by the synthesis of fibroblasts and a triple helix having three polypeptide chains, wherein the polypeptide chains are connected by thermally unstable and thermally stable chemical bonds.

Thus, if cell shrinkage occurs as a result of wound healing, it requires a lag phase for fibroblast migration and proliferation within the wound, and in evolved animals, the wound healing response to wounds involves an inflammatory process that later leads to the deposition of scar tissue.

The initial inflammatory response consists of an infiltration by leukocytes that dispose of cellular debris, followed by proliferation of fibroblasts in the wounded area after 72 hours. In addition, the cells also differentiate into contractile muscle fibroblasts, which are the source of cellular soft tissue contraction. The post-contraction collagen after the cellular contraction is placed beneath an immobile support matrix (ECM, short for Extra Cellular Matrix) within the stretched soft tissue structure. The deposition and subsequent remodeling of these matrixes provide a means to modify the consistency and shape of soft tissue for cosmetic purposes.

At this time, when the collagen fibrous tissue is heated by a certain energy source, the physical properties of the protein matrix are modified at a certain temperature. The molecular contraction of soft tissue or partial denaturation of collagen caused by the energy source destabilizes the longitudinal side of the molecule by breaking the thermally unstable bonds of the triple helix, resulting in stress, which breaks the molecular bonds of the matrix.

Therefore, in the conventional art, for wrinkle removal and lifting of the skin, it is proposed to cool the surface of the skin and irradiate energy such as laser or ray or high frequency wave from the surface of the skin to the lower subcutaneous tissue to not to damage the skin, and to increase the temperature of the subcutaneous tissue to remodel the tissue using the recovery process.

In particular, when high-frequency electric current runs through human tissues, there is almost no ion movement because the oscillation width is very short, and there is no electrochemical reaction or electrolysis phenomenon, and when high-frequency electric current is applied to the human body, heat is generated in the tissue because when high-frequency electrical energy is applied, the molecules that make up the tissue vibrate and rub against each other when the direction of the current changes, and bioheat is generated by rotational, twisting, and collision movements.

Unlike other forms of electricity, these high frequencies do not stimulate the sensory and motor nerves and can heat specific areas within the body's tissues without causing discomfort or muscle contraction, and the high frequency energy converted into bio-thermal energy increases the temperature of the tissues, enhancing cell function and increasing blood flow, and the like.

At this time, the commonly known temperature of tissue recovery is 40℃-50℃. When the local temperature of the tissue rises above 40℃, arterial and capillary dilation occurs by direct effect, and blood flow increases, thereby improving the body's defense mechanism, promoting blood circulation, and enhancing metabolism, and the increase in capillary blood flow caused by deep heat is 4-5 times greater than that at rest. In addition, the supply of oxygen, nutrients, antibodies, white blood cells, etc., is increased, and lymphatic circulation is promoted because the hydrostatic pressure of capillaries increases due to vasodilation.

By using this principle, it stimulates the collagen layer of the subcutaneous tissue directly under the skin, activates the remaining collagen layer in the human body, and loosens the facial muscles that are tightened due to habits or stress, improves circulation, and lifts sagging flesh.

However, for various reasons, such as the keratin in the skin acting as a natural barrier, the irradiated high-frequency energy could not be safely delivered to the lower subcutaneous tissue, or there was a risk, among others, of the energy going too deep and affecting tissues below the subcutaneous tissue.

Accordingly, in Korean Registered Utility Model No. 20-367199, an apparatus for performing a procedure by directly oscillating a high frequency between the skin and the subcutaneous tissue is presented, after making a hole between the skin and the subcutaneous tissue of the area to be treated. A wire member **30** is rounded by inserting a needle member **20** and withdrawn back into the original hole, and a procedure is performed by applying a high frequency to the wire member **30** while pulling the wire member **30**, so that the part between the rounded wire members **30** is heated.

At this time, a portion of the wire member **30**, except for a portion in the middle, is coated with a coating **40** of a material with excellent insulation to prevent leakage of high frequencies, and a portion of the coating **40** layer is coated with a coating **60** by using a durable material to facilitate easier gripping by the person being treated. [*Translator's note: The two Korean words, si-sul-ja (operator) and pi-si-sul-ja (person being treated), look and sound rather similar in the Korean language, and these two words were apparently switched around inadvertently, given that these two words were consistently switched around whenever they appear – about a dozen instances*.]

However, the prior art equipment still suffers from the problem that the applied high frequency not only oscillates from the subcutaneous tissue side to the skin side, but also oscillates to the underside of the subcutaneous tissue and in all directions of the wire member **30**, resulting in unwanted deep skin effects.

In addition, the position of the wire member **30** inserted into the skin is only guessed, and the exact position is not known, so the accuracy of the procedure is reduced. There is also a problem that the skin is heated to a high temperature due to the oscillation of the high frequency, and if the person being treated is not aware of it, the operator may be burned.

The present invention is designed to maximize the efficiency of the treatment by turning on the high frequency directly between the skin and the subcutaneous tissue when removing wrinkles and lifting the skin using high frequency, as well as to ensure that the high frequency is only applied to the localized area alone, i.e., the specific location to be treated.

In addition, the present invention has another object to secure safety by ensuring that the high frequency generated in the area to be treated is only generated on the skin side, and no radiofrequency is applied to the lower side of the subcutaneous tissue.

In addition, the present invention is configured to increase the accuracy of the procedure by accurately identifying the position of the handpiece inserted into the skin with the naked eye of the person being treated, and to control the operation of the equipment by checking the temperature during the procedure, as well as to check the duration of the treatment.

CONFIGURATION OF THE INVENTION

Accordingly, the present invention provides a high-frequency handpiece for generating high-frequency waves by separating the skin and subcutaneous tissue from each other and inserting the handpiece therebetween is provided with a heating part at the end of the handpiece, wherein all parts except the skin-facing direction of the heating part are insulated with an insulating member, so that only the uninsulated skin-facing direction is heated.

Furthermore, the handpiece of the present invention is equipped with a light-emitting member so that the position of the heating part of the handpiece inserted into the skin can be easily discerned from outside of the skin as well.

Furthermore, the handpiece of the present invention is further equipped with a temperature detection sensor, which blocks the application of the high frequency when the temperature of the skin is detected to be above the set value preset in the main unit and re-applies the high frequency when the temperature is detected to be within the set value.

Furthermore, the present invention is characterized in that a timer is further included on one side of the handpiece.

Hereinafter, the configuration of the most preferred embodiment of the invention will be described in detail with reference to the accompanying drawings.

The present invention, like the commonly used radiofrequency treatment devices, is provided with a main body **100** capable of applying radiofrequency, and a connection line **110** for supplying the radiofrequency applied by the main body **100** to a handpiece **200** is stacked on a sheath having an insulating member and extends to a predetermined length.

The handpiece **200** of the present invention comprises a handle **210** for gripping by hand, an insertion part **220** that extends from the handle **210** by a predetermined length and inserted into the skin, and a heating part **230** that is provided at the end of the insertion part **220** to directly heat the skin. Of course, it is also possible to perform the procedure by extending the insertion part **220** and gripping the insertion part **220** without the handle **210**.

Then, the connection line **110** connecting to the handpiece **200**, as well as the handle **210**, the insertion part **220**, and the heating part **200** are insulated with an insulating member **240**, except for the upper side of the heating part **200**, that is, the skin-facing part of the handpiece **200** inserted into the skin.

At this time, the heating part **220** can be formed in various shapes, but it is preferably a soft shape, such as a spoon, so that the end is not sharp and does not cause injury to the skin, and by exposing a portion in the upward direction of the heating part **200**, such as the connection line **110**, the handle **210**, and the RF conductor inserted in the insertion part **220**, the applied high frequency delivers heat only to the skin side, which is the upper side of the heating part **220**, due to the insulating member **240**.

Furthermore, by adopting and attaching various light-emitting members **250** of a fine size, such as a fiber or an LED, to the end of the heating part **200**, the heating part **220** of the handpiece **200** inserted into the skin emits a predetermined color at the same time as the high frequency is applied, so that the position of the heating part **220** of the handpiece **200** can be easily discerned even from outside of the skin as well.

A temperature sensor **260** is attached to one side of the heating part **220** of the handpiece **20**0 (Any point or end of the heating element, or any other location where the temperature of the skin can be checked) to detect and check the temperature of the skin during the treatment, and a timer **270** is provided on the handle **210** to measure the treatment time in any form, whether digital or analog.

As the present invention is not directed to a method for carrying out a procedure for removing wrinkles, but rather to a handpiece for use in such a procedure, the following description focuses on the specific actions and effects of using the present handpiece, without describing in detail how to perform the wrinkle removal procedure or the effects thereof.

On one side of the skin of the person to be treated, the skin and subcutaneous tissue are detached in a commonly practiced manner, and the high-frequency handpiece **200** of the present invention connected to the main body **100** of the high-frequency treatment device capable of applying high-frequency is inserted between the skin and subcutaneous tissue of the operator.

The high frequency waves applied from the main unit **100** heats the skin side by oscillating through the heating part **230**, which is partially exposed to the skin side alone at the end of the handpiece **200** that is inserted into the skin of the operator.

Therefore, only a localized portion of the skin area on the skin side alone is heated, whereas the lower side of the insertion part **220** or the heating part **230** inserted into the skin is not heated since heating is blocked by the insulation member **240**, preventing the high frequency from oscillating, so that the skin area on which the treatment is intended to be performed is not heated.

The person being treated performs the treatment by moving the handpiece **200** inserted into the skin in a regular reciprocating motion from one location to another, avoiding excessively concentrated heating in any one location.

However, contrary to the intention of the person being treated, if a portion of the skin is heated too intensively, there is a risk of burning the skin, but the temperature detection sensor **260** attached to one side of the heating part **230** continuously monitors the temperature of the skin at the same time as the application of the high frequency, and if a temperature above the set value (40-70℃) preset in the main unit **100** is detected, the application of the high frequency is blocked to prevent burns. Also, if the temperature drops due to the cutoff of the high frequency and a temperature below the set value is detected, the high frequency is re-applied. This is performed by a control and operation unit (not shown) provided in the main unit **100**.

At this time, it is also desirable for the person being treated to check the timer **270** attached to the handle **210** to check the duration of the treatment to avoid concentrated heating on only one side of the skin.

In addition, as for the heating part **230** of the handpiece **200**, which is inserted into the skin and heats the skin while moving in a reciprocating manner, its position cannot be identified because of the skin of the skin [*sic*], but since the light-emitting member **250** provided on one side of the heating part **230** emits light, it is possible to perform a procedure while accurately identifying the position of the heating part **230** with the naked eye even from outside of the thin skin.

EFFECTS OF THE INVENTION

As shown above, the present invention is a treatment performed directly by inserting a handpiece between the skin and subcutaneous tissue, and stable treatment is possible because the high frequency does not affect any other areas at all except in the skin-facing direction of the specific part to be treated.

In addition, by detecting the temperature of the skin during the treatment and blocking the application of the high frequency when the temperature rises above the set value, and by re-applying it when the temperature is below the set value, the operator does not have to worry about being burned. It is a useful invention that enables a more reliable treatment by visually checking the heating part of the handpiece inserted into the skin even from outside the skin and checking the treatment time.

BRIEF DESCRIPTION OF THE DRAWINGS

FIG. **1** is a perspective view of a conventional high-frequency treatment device.
FIG. **2** is an example of a high frequency handpiece according to the present invention in the state of being combined with the device.
FIG. **3** is a partial perspective view of a high frequency handpiece according to the present invention.
FIG. **4** is a partial sectional side view of a high frequency handpiece according to the present invention.
FIG. **5** is an illustration of a high-frequency handpiece according to the present invention inserted into the skin of the operator.

<Description of the Codes for Key Parts of the Drawings>

100: Main unit	**110**: Connecting wire
200: Handpiece	**210**: Handle
220: Insertion part	**230**: Heating part
240: Insulation member	**250**: Light emitting member
260: Temperature sensor	**270**: Timer

DRAWINGS

FIG. 1

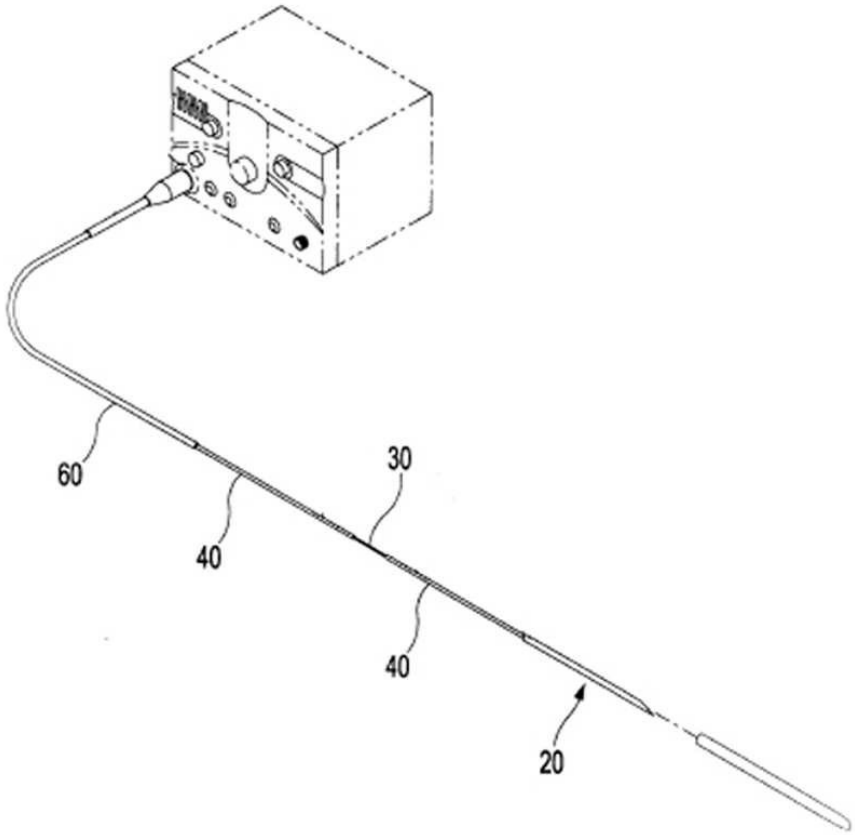

FIG. 2

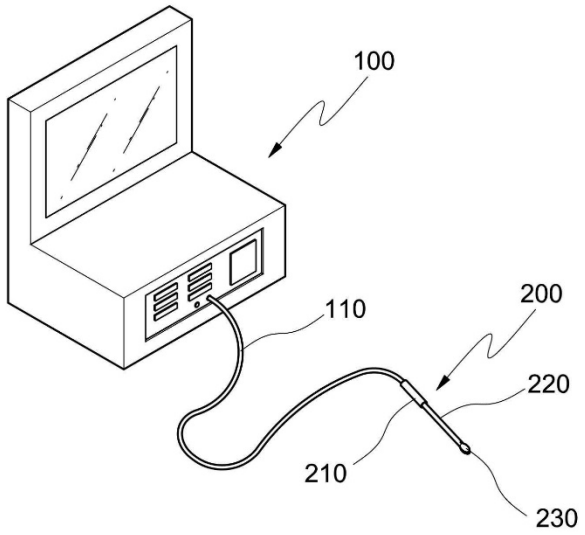

FIG. 3

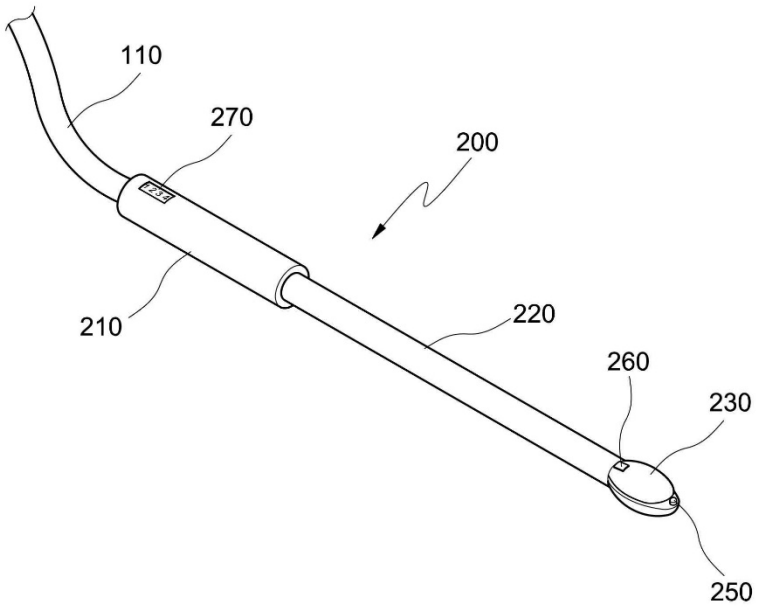

FIG. 4

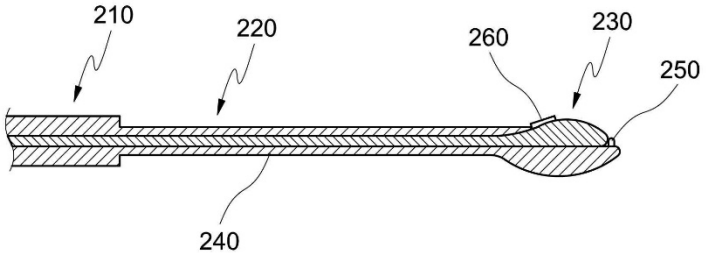
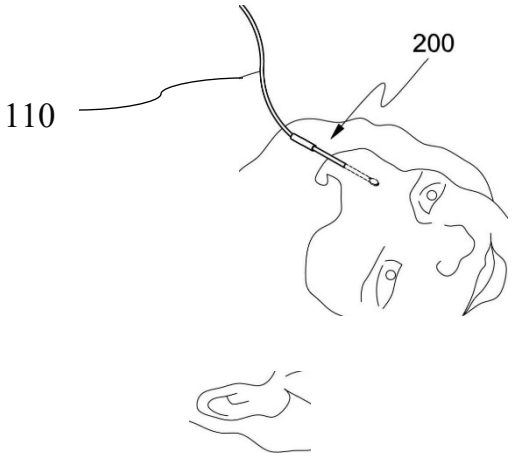
FIG. 5