US007824394B2

(12) **United States Patent**
Manstein

(10) **Patent No.: US 7,824,394 B2**
(45) **Date of Patent: Nov. 2, 2010**

(54) **METHOD AND APPARATUS FOR DERMATOLOGICAL TREATMENT AND TISSUE RESHAPING**

(75) Inventor: **Dieter Manstein**, Boston, MA (US)

(73) Assignee: **The General Hospital Corporation**, Boston, MA (US)

(*) Notice: Subject to any disclaimer, the term of this patent is extended or adjusted under 35 U.S.C. 154(b) by 1488 days.

(21) Appl. No.: **11/098,030**

(22) Filed: **Apr. 1, 2005**

(65) **Prior Publication Data**

US 2005/0222565 A1 Oct. 6, 2005

Related U.S. Application Data

(60) Provisional application No. 60/558,476, filed on Apr. 1, 2004.

(51) **Int. Cl.**
A61B 18/18 (2006.01)

(52) **U.S. Cl.** **606/9**; 606/41; 606/49; 607/88; 607/96; 607/101

(58) **Field of Classification Search** 606/3, 606/9–12, 35–46, 131, 167–187, 189; 607/88–93, 607/96–101
See application file for complete search history.

(56) **References Cited**

U.S. PATENT DOCUMENTS

3,505,993 A 4/1970 Lewes et al.
4,985,027 A 1/1991 Dressel
5,000,752 A * 3/1991 Hoskin et al. 606/9
5,102,410 A 4/1992 Dressel
5,312,395 A 5/1994 Tan et al.
5,458,596 A 10/1995 Lax et al.
5,569,242 A 10/1996 Lax et al.
5,582,184 A * 12/1996 Erickson et al. 600/576
5,599,342 A 2/1997 Hsia et al.
5,660,836 A 8/1997 Knowlton
5,697,281 A 12/1997 Eggers et al.
5,697,909 A 12/1997 Eggers et al.
5,755,753 A 5/1998 Knowlton

(Continued)

FOREIGN PATENT DOCUMENTS

DE 19929713 1/2001

(Continued)

OTHER PUBLICATIONS

Urmey et al., "Percutaneous Electrode Guidance: A Noninvasive Technique For Prelocation of Peripheral nerves to Facilitate Peripheral Plexus or Nerve Block," Regional Anesthesia and Pain Medicine, vol. 27, No. 3, 2002, pp. 261-267.

(Continued)

Primary Examiner—Ahmed M Farah
(74) *Attorney, Agent, or Firm*—Dorsey & Whitney LLP

(57) **ABSTRACT**

The present invention provides improved methods and apparatus for skin treatment and tissue remodeling. The apparatus includes an array of needles that penetrate the skin and serve as electrodes to deliver radio frequency current or other electrical or optical energy into the tissue being treated, causing thermal damage in controlled patterns. The damaged regions promote beneficial results such as uniform skin tightening by stimulation of wound healing and collagen growth.

21 Claims, 4 Drawing Sheets

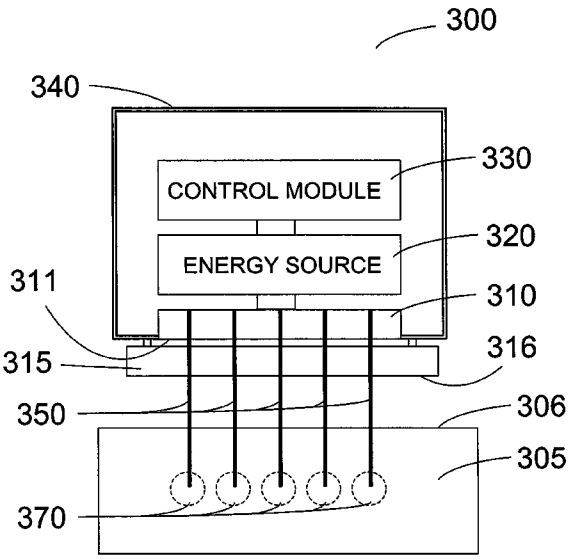

U.S. PATENT DOCUMENTS

5,807,385	A	9/1998	Keller	
5,814,040	A	9/1998	Nelson et al.	
5,861,002	A	1/1999	Desai	
5,871,524	A	2/1999	Knowlton	
5,919,219	A	7/1999	Knowlton	
5,948,011	A	9/1999	Knowlton	
5,954,710	A	9/1999	Paolini et al.	
5,976,129	A	11/1999	Desai	
6,048,352	A *	4/2000	Douglas et al.	606/181
6,106,516	A	8/2000	Massengill	
6,120,519	A	9/2000	Weber et al.	
6,206,873	B1	3/2001	Paolini et al.	
6,241,753	B1	6/2001	Knowlton	
6,277,116	B1 *	8/2001	Utely et al.	606/42
6,311,090	B1	10/2001	Knowlton	
6,334,856	B1	1/2002	Allen et al.	
6,350,276	B1	2/2002	Knowlton	
6,355,054	B1	3/2002	Neuberger	
6,377,854	B1	4/2002	Knowlton	
6,377,855	B1	4/2002	Knowlton	
6,381,497	B1	4/2002	Knowlton	
6,381,498	B1	4/2002	Knowlton	
6,387,380	B1	5/2002	Knowlton	
6,405,090	B1	6/2002	Knowlton	
6,413,255	B1	7/2002	Stern	
6,416,531	B2	7/2002	Chen	
6,418,232	B1	7/2002	Avrahami	
6,425,912	B1	7/2002	Knowlton	
6,427,089	B1	7/2002	Knowlton	
6,430,446	B1	8/2002	Knowlton	
6,438,424	B1	8/2002	Knowlton	
6,453,202	B1	9/2002	Knowlton	
6,461,378	B1	10/2002	Knowlton	
6,470,216	B1	10/2002	Knowlton	
6,482,204	B1	11/2002	Lax et al.	
6,503,231	B1 *	1/2003	Prausnitz et al.	604/272
6,562,054	B1	5/2003	Weber et al.	
6,597,946	B2	7/2003	Avrahami et al.	
6,605,079	B2	8/2003	Shanks et al.	
6,605,080	B1	8/2003	Altshuler et al.	
6,611,706	B2	8/2003	Avrahami et al.	
6,615,079	B1	9/2003	Avrahami	
6,708,060	B1	3/2004	Avrahami et al.	
6,711,435	B2	3/2004	Avrahami et al.	
6,723,092	B2	4/2004	Brown et al.	
6,743,211	B1 *	6/2004	Prausnitz et al.	604/239
6,749,624	B2	6/2004	Knowlton	
6,766,202	B2	7/2004	Underwood et al.	
6,997,923	B2	2/2006	Anderson et al.	
7,006,874	B2	2/2006	Knowlton et al.	
7,008,421	B2	3/2006	Daniel et al.	
7,022,121	B2	4/2006	Stern et al.	
7,025,765	B2	4/2006	Balbierz et al.	
7,060,061	B2	6/2006	Altshuler et al.	
7,115,123	B2	10/2006	Knowlton et al.	
7,141,049	B2	11/2006	Stern et al.	
7,189,230	B2	3/2007	Knowlton	
7,217,265	B2	5/2007	Hennings et al.	
7,223,264	B2	5/2007	Daniel et al.	
7,278,991	B2	10/2007	Morris et al.	
7,331,953	B2 *	2/2008	Manstein et al.	606/9
7,422,586	B2	9/2008	Morris et al.	
2002/0115991	A1	8/2002	Edwards	
2002/0120263	A1	8/2002	Brown et al.	
2002/0128641	A1	9/2002	Underwood et al.	
2002/0138049	A1	9/2002	Allen et al.	
2002/0161357	A1	10/2002	Anderson et al.	
2003/0130655	A1	7/2003	Woloszko et al.	
2003/0212394	A1	11/2003	Pearson et al.	
2003/0216719	A1	11/2003	Debenedictis et al.	
2004/0048842	A1	3/2004	McMillan	
2004/0073277	A1	4/2004	Geronemus et al.	
2004/0267335	A1	12/2004	Tulip et al.	
2005/0049582	A1	3/2005	Debenedictis et al.	
2005/0087198	A1	4/2005	Bruno-Raimondi et al.	
2005/0137662	A1	6/2005	Morris et al.	
2005/0209564	A1	9/2005	Bonner et al.	
2005/0209565	A1	9/2005	Yuzhakov et al.	
2005/0222555	A1	10/2005	Manstein et al.	
2005/0222565	A1	10/2005	Manstein	
2006/0004306	A1	1/2006	Altshuler et al.	
2006/0004347	A1	1/2006	Altshuler et al.	
2006/0009750	A1	1/2006	Altshuler et al.	
2006/0020309	A1	1/2006	Altshuler et al.	
2006/0058712	A1	3/2006	Altshuler et al.	
2006/0122668	A1	6/2006	Anderson et al.	
2006/0206110	A1	9/2006	Knowlton et al.	
2006/0224148	A1	10/2006	Cho et al.	
2006/0253112	A1	11/2006	Suarez et al.	
2006/0293722	A1	12/2006	Slatkine et al.	
2007/0010811	A1	1/2007	Stern et al.	
2007/0073367	A1	3/2007	Jones et al.	
2007/0173799	A1	7/2007	Hsia	
2007/0198003	A1	8/2007	Domankevitz et al.	
2007/0208340	A1	9/2007	Ganz et al.	
2008/0125775	A1	5/2008	Morris	
2008/0221649	A1	9/2008	Echague et al.	

FOREIGN PATENT DOCUMENTS

EP	0226336	6/1987
WO	0048644	8/2000
WO	0132073	5/2001
WO	WO 02/060523	8/2002
WO	03005919	1/2003
WO	WO 03/005919 A1 *	1/2003
WO	2004086947	10/2004
WO	WO 2004/086947	10/2004
WO	2005096979	10/2005
WO	2005096980	10/2005

OTHER PUBLICATIONS

Tschopp et al., "Comparison of Various Methods of Electromyographic Monitoring of the Recurrent Laryngeal Nerve in Thyroid Surgery," Ann. Otol. Rhinol. Laryngol., 111:2002, pp. 811-816.

U.S. Appl. No. 60/707,778, filed Aug. 12, 2005, Rylander et al.

International Search Report mailed Sep. 17, 2008 for International Application No. PCT/US2008/061682.

Harrington, James A. "A Review of IR Transmitting, Hollow Waveguides", Fiber and Integrated Optics, 19:211-217 (2000).

Khan et al. "Intradermally Focused Infrared Laser Pulses: Thermal Effects at Defined Tissue Depths", Lasers in Surgery and Medicine, 36:270-280 (2005).

Manstein et al. "Fractional Phtothermolysis: A New Concept for Cutaneous Remodeling Using Microscopic Patterns of Thermal Injury", Lasers in Surgery and Medicine, 34:426-438 (2004).

Medical Fiber Optic Components, Schott, Germany, 20 pages (May 2003).

Smartlipo: Laser Lipolysis With Pulsed Nd:YAG Laser Brochure, DEKA M.E.L.A. s.r.l., Italy, 2 pages.

Tri-Active Brochure, DEKA M.E.L.A. s.r.l., Italy, 4 pages.

* cited by examiner

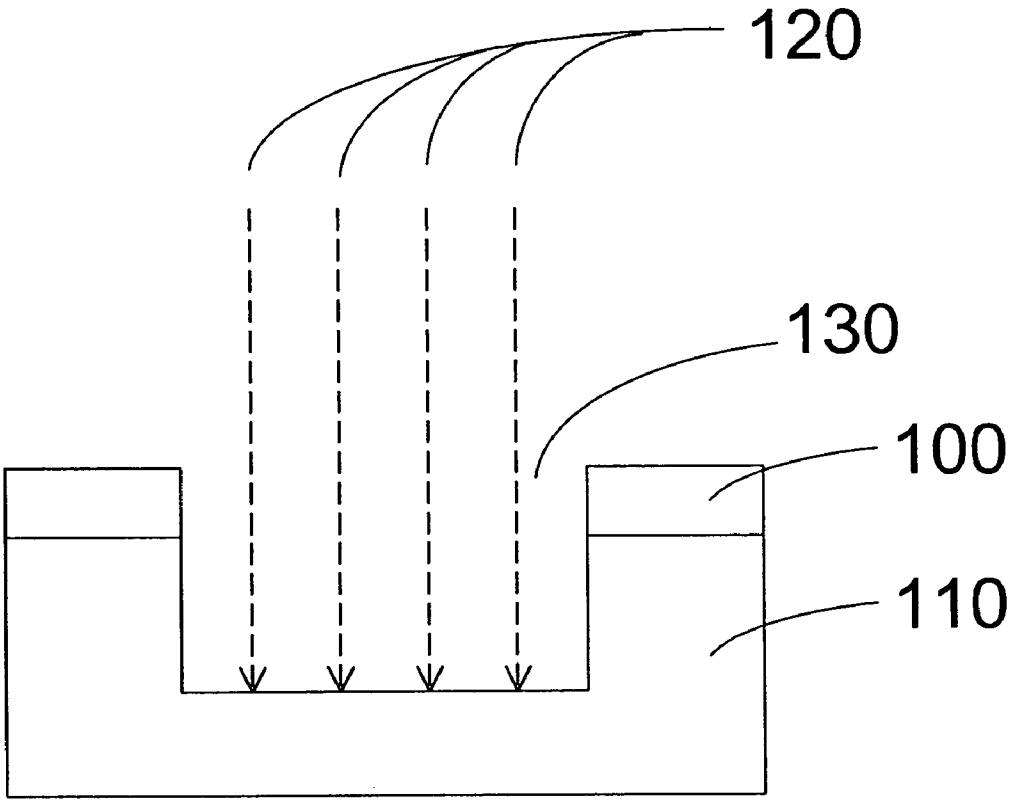

FIG. 1

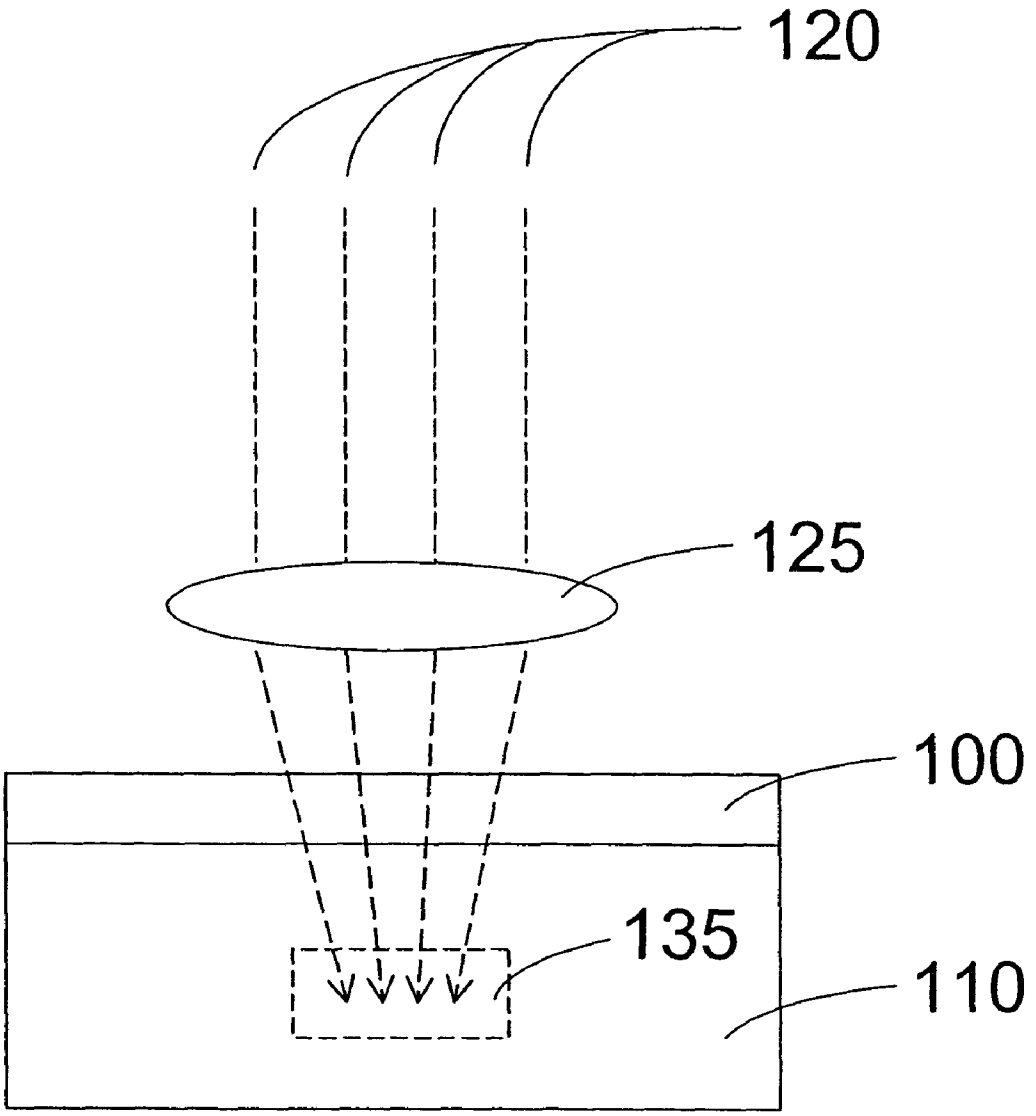

FIG. 2

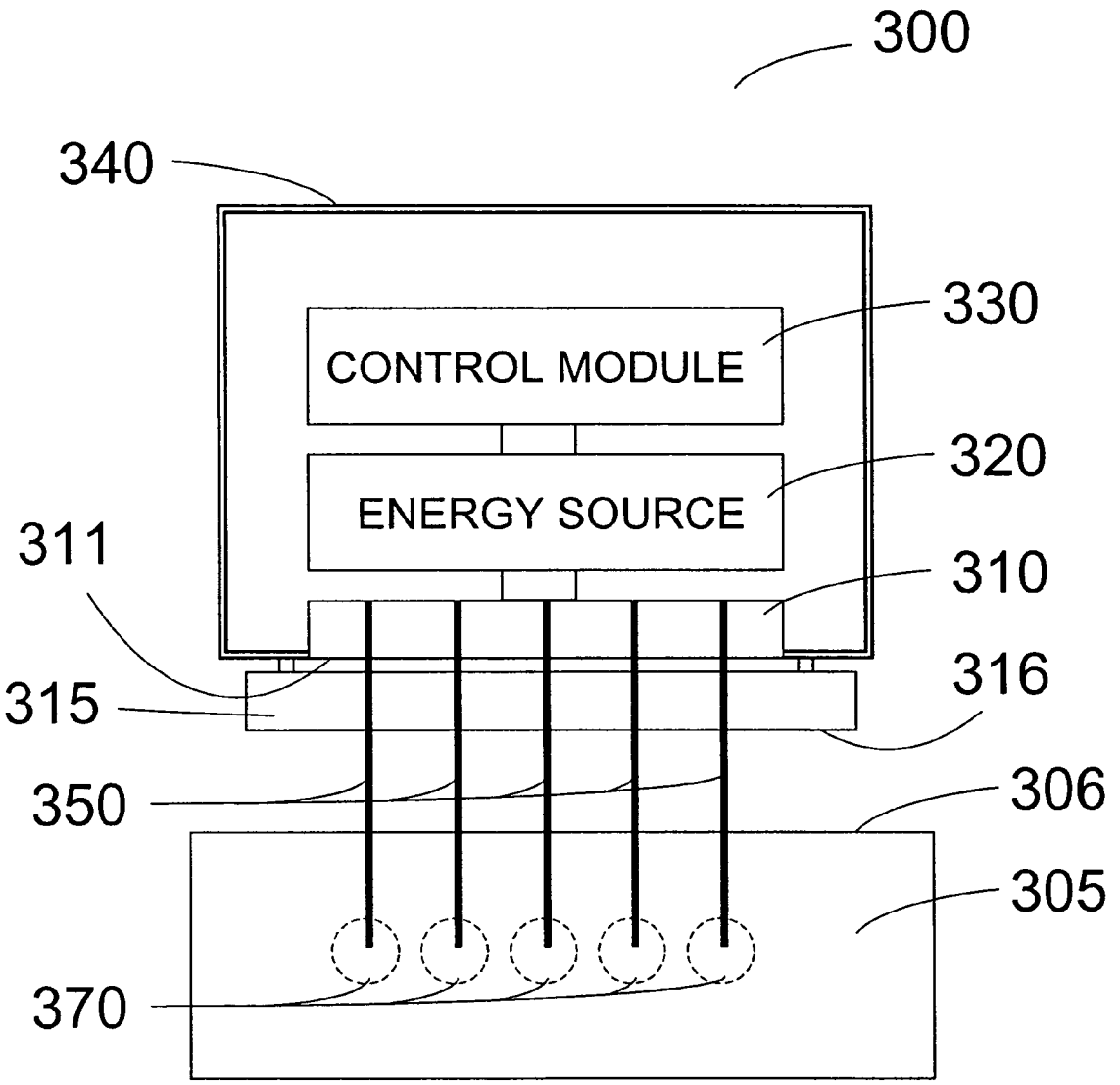
300
340
330
CONTROL MODULE
320
ENERGY SOURCE
311
310
315
316
350
306
305
370

FIG. 3

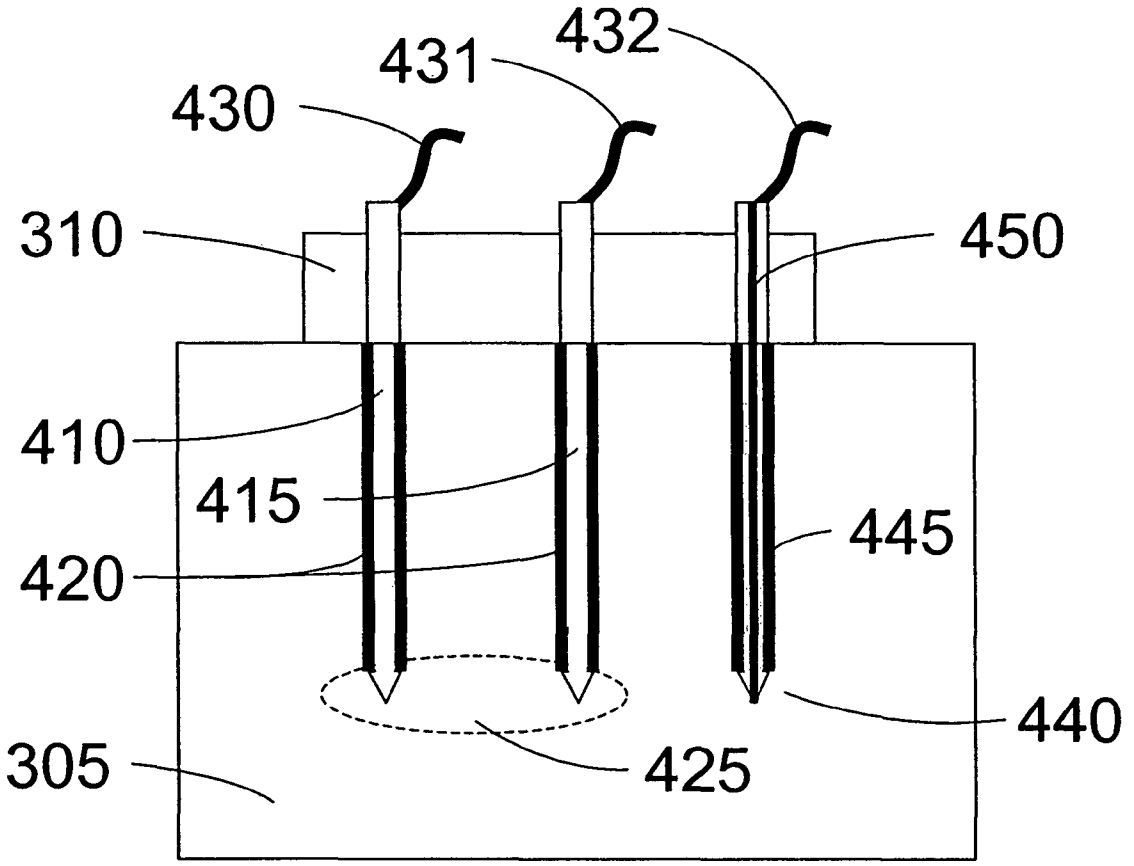

FIG. 4

METHOD AND APPARATUS FOR DERMATOLOGICAL TREATMENT AND TISSUE RESHAPING

RELATED APPLICATION

This application claims priority to U.S. Provisional Application Ser. No. 60/558,476, filed on Apr. 1, 2004.

INCORPORATION BY REFERENCE

The foregoing applications, and all documents cited therein or during their prosecution ("appln cited documents") and all documents cited or referenced in the appln cited documents, and all documents cited or referenced herein ("herein cited documents"), and all documents cited or referenced in herein cited documents, together with any manufacturer's instructions, descriptions, product specifications, and product sheets for any products mentioned herein or in any document incorporated by reference herein, are hereby incorporated herein by reference, and may be employed in the practice of the invention.

FIELD OF THE INVENTION

The present invention is directed to an improved method for treatment of skin and other tissues. More specifically, it is directed to a method of fractional wounding using arrays of needles to damage selected regions of the skin or subdermal tissue and thereby promote beneficial results including skin tightening and tissue remodeling.

BACKGROUND OF THE INVENTION

Skin is primarily made of two layers. The outer layer, or epidermis, has a depth of approximately 100 μm. The inner layer, or dermis, has depth of approximately 3000 μm from the outer surface of the skin and is primarily composed of a network of fibrous protein known as collagen.

There is an increasing demand for repair of skin defects, which can be induced by aging, sun exposure, dermatological diseases, traumatic effects, and the like. Aging skin tends to lose its elasticity, leading to increased formation of wrinkles and sagging. Other causes of undesirable wrinkles in skin include excessive weight loss and pregnancy. There are several well-known surgical approaches to improving the appearance of skin that involve incisions being made in the skin followed by the removal of some tissue and rejoining of the remaining tissue. These surgical approaches include facelifts, brow lifts, breast lifts, and "tummy tucks." Such approaches have many negative side effects including scar formation, long healing times, displacement of skin from its original location relative to the underlying bone structure, and nonuniform skin tightening.

Many treatments have been developed that use electromagnetic radiation to improve skin defects by inducing a thermal injury to the skin, which results in a complex wound healing response of the skin. This leads to a biological repair of the injured skin and may be accompanied by other desirable effects. Various techniques providing this objective have been introduced in recent years. The different techniques can be generally categorized in two groups of treatment modalities: ablative laser skin resurfacing ("LSR") and non-ablative collagen remodeling ("NCR"). The first group of treatment modalities, LSR, includes causing fairly extensive thermal damage to the epidermis and/or dermis, while the second group, NCR, is designed to avoid thermal damage of the epidermis.

LSR is considered to be an effective laser treatment for repairing skin. In a typical LSR procedure, shown schematically in FIG. **1**, a region of the epidermis **100** and a corresponding region of the dermis **110** beneath it are thermally damaged to promote wound healing. Electromagnetic energy **120** is directed towards a region of skin, ablating the skin and removing both epidermal and dermal tissue in region **130**. LSR with pulsed CO_2 or Er:YAG lasers, which may be referred to in the art as laser resurfacing or ablative resurfacing, is considered to be an effective treatment option for signs of photo aged skin, chronically aged skin, scars, superficial pigmented lesions, stretch marks, and superficial skin lesions. However, patients may experience major drawbacks after each LSR treatment, including edema, oozing, and burning discomfort during first fourteen (14) days after treatment. These major drawbacks can be unacceptable for many patients. A further problem with LSR procedures is that the procedures are relatively painful and therefore generally require an application of a significant amount of analgesia. While LSR of relatively small areas can be performed under local anesthesia provided by injection of an anestheticum, LSR of relatively large areas is frequently performed under general anesthesia or after nerve blockade by multiple injections of anesthetic.

A limitation of LSR is that ablative resurfacing in areas other than the face generally have a greater risk of scarring because the recovery from skin injury within these areas is not very effective. Further, LSR techniques are better suited for correction of pigmentation defects and small lesions than for reducing or eliminating wrinkles.

In an attempt to overcome the problems associated with LSR procedures, several types of NCR techniques has emerged. These techniques are variously referred to in the art as non-ablative resurfacing, non-ablative subsurfacing, or non-ablative skin remodeling. NCR techniques generally utilize non-ablative lasers, flashlamps, or radio frequency current to damage dermal tissue while sparing damage to the epidermal tissue. The concept behind NCR techniques is that thermal damage of the dermal tissue is thought to induce collagen shrinkage, leading to tightening of the skin above, and stimulation of wound healing which results in biological repair and formation of new dermal collagen. This type of wound healing can result in a decrease of structural damage related to photoaging. Avoidance of epidermal damage in NCR techniques decreases the severity and duration of treatment-related side effects. In particular, post-procedural oozing, crusting, pigmentary changes and incidence of infections due to prolonged loss of the epidermal barrier function can usually be avoided by using NCR techniques.

In the NCR method of skin treatment, illustrated schematically in FIG. **2**, selective portions of dermal tissue **135** within the dermal layer **110** are heated to induce wound healing without damaging the epidermis **100** above. Selective dermal damage that leaves the epidermis undamaged can be achieved by cooling the surface of the skin and focusing electromagnetic energy **120**, which may be a laser beam, onto dermal region **135** using lens **125**. Other strategies are also applied using nonablative lasers to achieve damage to the dermis while sparing the epidermis in NCR treatment methods. Nonablative lasers used in NCR procedures generally have a deeper dermal penetration depth as compared to ablative lasers used in LSR procedures. Wavelengths in the near infrared spectrum can be used. These wavelengths cause the nonablative laser to have a deeper penetration depth than the very superficially-absorbed ablative Er:YAG and CO_2 lasers. Examples of NCR techniques and apparatus are disclosed by Anderson et al. in U.S. Patent Publication No. 2002/0161357.

While it has been demonstrated that these NCR techniques can assist in avoiding epidermal damage, one of the major drawbacks of these techniques is their limited efficacies. The improvement of photoaged skin or scars after the treatment with NCR techniques is significantly smaller than the improvements found when LSR ablative techniques are utilized. Even after multiple treatments, the clinical improvement is often far below the patient's expectations. In addition, clinical improvement is usually several months delayed after a series of treatment procedures. NCR is moderately effective for wrinkle removal and is generally not effective for dyschromia. One advantage of NCR is that it does not have the undesirable side effects that are characteristic of the LSR treatment, such as the risk of scarring or infection.

Another limitation of NCR procedures relates to the breadth of acceptable treatment parameters for safe and effective treatment of dermatological disorders. The NCR procedures generally rely on an optimum coordination of laser energy and cooling parameters, which can result in an unwanted temperature profile within the skin leading to either no therapeutic effect or scar formation due to the overheating of a relatively large volume of the tissue.

Another approach to skin tightening and wrinkle removal involves the application of radio frequency ("RF") electrical current to dermal tissue via a cooled electrode at the surface of the skin. Application of RF current in this noninvasive manner results in a heated region developed below the electrode that damages a relatively large volume of the dermis, and epidermal damage is minimized by the active cooling of the surface electrode during treatment. This treatment approach can be painful, and can lead to short-term swelling of the treated area. Also, because of the relatively large volume of tissue treated and the need to balance application of RF current with surface cooling, this RF tissue remodeling approach does not permit fine control of damage patterns and subsequent skin tightening. This type of RF technique is monopolar, relying on a remote grounding of the patient to complete the current flow from the single electrode. The current in monopolar applications must flow through the patient's body to the remote ground, which can lead to unwanted electrical stimulation of other parts of the body. In contrast, bipolar instruments conduct the current between two relatively nearby electrodes through a more localized pathway.

In view of the shortcomings of the above methods of dermatological treatment and tissue remodeling, there is a need to provide a procedure and apparatus that combine safe and effective treatment for tissue remodeling, skin tightening, and wrinkle removal with minimal side effects, such as intraprocedural discomfort, post-procedural discomfort, lengthy healing time, and post-procedural infection.

Citation or identification of any document in this application is not an admission that such document is available as prior art to the present invention.

SUMMARY OF THE INVENTION

It is therefore one of the objects of the present invention to provide an apparatus and method that combines safe and effective treatment for an improvement of dermatological disorders with minimum side effects. Another object of the present invention is to provide an apparatus and method that promotes skin tightening and wrinkle removal by creation of a pattern of small localized regions of thermal damage within the dermis. Still another object of the present invention is to provide a method and apparatus for skin tightening or other forms of tissue remodeling by using an array of electrode needles to controllably deliver electrical or thermal energy to predetermined locations within the dermis or other tissue.

These and other objects can be achieved with an exemplary embodiment of the apparatus and method according to the present invention, in which portions of a target area of tissue are be subjected electromagnetic radiation, such as radio frequency pulses, or thermal energy. Electromagnetic radiation is directed to portions of a target area within the skin or deeper tissue using minimally invasive methods, causing fractional wounding of the portions of the target area. The electromagnetic radiation may be generated by an electromagnetic radiation source, which is configured to deliver heat, radio frequency pulses, electrical current, or the like to a plurality of target areas.

In yet another exemplary embodiment according to the present invention, an electromagnetic radiation source is configured to generate electromagnetic radiation, and a delivery device comprising an array of needles, coupled to the electromagnetic radiation source, is configured to penetrate the skin to a desired depth to deliver the electromagnetic radiation directly to a plurality of target areas.

One method in accordance with the present invention comprises inserting an array of needles into a region of skin to a predetermined depth. Radio frequency pulses of electrical current are then applied to one or more of the needles, which can function as electrodes in monopolar or bipolar modes to create regions of thermal damage and/or necrosis in the tissue surrounding the tips of the needles.

In an alternate aspect of the invention, one or more of the needles in the array may be hollow and used to deliver small amounts of analgesic or anesthetic into the region of skin being treated. These hollow needles may be interspersed among the electrode needles in the array, and they may also function as electrodes.

In another embodiment of the invention, the electrode needles may also be connected to a second source of electrical current in the milliampere range. Detection of a nerve close to any of the inserted needles of the array is achieved by sequential application of small currents to the needles in the array and observation of any visible motor response. If a nerve is detected, the nearby needle or needles can be deactivated during the subsequent application of RF current to other electrode needles in the array to avoid damaging the nerve.

In yet another embodiment of the invention, the methods and apparatus descibed herein can be used to heat portions of cartilage, such as that located in the nose, using a minimally invasive technique, allowing reshaping of the pliant heated cartilage to a desired form.

A further understanding of the nature and advantages of the present invention will become apparent by reference to the remaining portions of the specification and drawings.

BRIEF DESCRIPTION OF THE DRAWINGS

The following detailed description, given by way of example, but not intended to limit the invention solely to the specific embodiments described, may best be understood in conjunction with the accompanying drawings, in which:

FIG. **1** is a schematic drawing of a cross section of a tissue treated using the ASR method.

FIG. **2** is a schematic drawing of a cross section of a tissue treated using the NSR method.

FIG. **3** is a schematic illustration of an apparatus for conducting tissue reshaping using electromagnetic energy according to one embodiment of the present invention.

FIG. **4** is a schematic illustration of portions of an apparatus for conducting tissue reshaping according to one embodiment of the present invention.

Throughout the drawings, the same reference numerals and characters, unless otherwise stated, are used to denote like features, elements, components, or portions of the illustrated embodiments. Moreover, while the present invention will now be described in detail with reference to the Figures, it is done so in connection with the illustrative embodiments and is not limited by the particular embodiments illustrated in the Figures.

DETAILED DESCRIPTION OF THE INVENTION

The present invention relates to methods and apparatus for improvement of skin defects including, but not limited to, wrinkles, stretch marks, and cellulite. In one embodiment, skin tightening or tissue remodeling is accomplished by creating a distribution of regions of necrosis, fibrosis, or other damage in the tissue being treated. The tissue damage is achieved by delivering localized concentrations of electrical current that is converted into heat in the vicinity of the tips of the electrode needles. Inducing regions of local thermal damage within the dermis results in an immediate shrinking of collagen, leading to beneficial skin tightening response. Additionally, the thermal damage tends to stimulate the formation of new collagen, which makes the local skin tissue fuller and gradually leads to additional skin tightening and reduction of wrinkles.

In an exemplary embodiment of the present invention, tissue treatment apparatus **300** shown in FIG. **3** may be used to create regions of damage within the tissue being treated. The tissue reshaping apparatus may comprise a plurality of needles **350** attached to a base **310**. The base is attached to housing **340** or formed as a part of the housing. A source of RF current **320** is electrically connected to each of the needles **350**. A control module **330** permits variation of the characteristics of the RF electrical current, which can be supplied individually to one or more of the needles. Optionally, energy source **320** and/or control module **330** may be located outside of the housing.

In one exemplary embodiment, the energy source **320** is a radio frequency (RF) device capable of outputing signals having frequencies in a desired range. In another exemplary embodiment, the energy source is capable of outputting an AC or DC electric current. The control module **330** provides application-specific settings to the energy source **320**. The energy source **320** receives these settings, and generates a current directed to and from specified needles for selectable or predetermined durations, intensities, and sequences based on these settings.

In yet another embodiment of the present invention, a spacer substrate **315** containing a pattern of small holes through which the array of needles protrudes may optionally be provided between the base **310** and the surface of the skin **306**. This spacer substrate may be used to provide mechanical stability to the needles. Optionally, this substrate may be movably attached to the base **310** or housing **340** and adjustable with respect to base **310**, supporting the array of needles to control the depth of the needles protruding from the lower surface **316** of spacer substrate **315**, and thus controlling the depth to which the needles are inserted into the skin.

In practicing a method in accordance with the present invention, the sharp distal ends of needles **350** pierce the surface **306** of skin tissue **305** and are inserted into the tissue until the bottom surface **316** of spacer substrate **315** (or the bottom surface **311** of base **310** if a spacer substrate **315** is not used) contacts the surface **306** of the skin **305**. This configuration permits reliable insertion of the array of needles to a predetermined depth within the tissue being treated. Control module **330** is then configured to deliver controlled amounts of RF current to one or more needles **350**.

Base **310** and/or spacer substrate **315**, if used, can be planar or they may have a bottom surface that is contoured to follow the shape of the region of tissue being treated. This permits penetration of the needle array to a uniform depth within the targeted tissue even if the surface of the skin is not planar, e.g., along the eye sockets.

In another embodiment, base **310** and/or a spacer substrate **315**, if used, may be cooled by any suitable means (such as by embedded conduits containing circulating coolant or by a Peltier device) to cool the surface of the skin when the needle array penetrates the skin to reduce or eliminate pain. The surface region of the skin being treated and/or the needles themselves may also be precooled by separate means, including convective or conductive means, prior to penetration of the skin by the array of needles.

In a preferred embodiment of the present invention, the shafts of conductive needles **350** are electrically insulated except for the portion of the needle near the tip. In the apparatus of FIG. **3**, application of RF current to the needles **350** causes heating in the exposed tip region, inducing thermal damage regions **370** around the tip of each needle. Thermal damage regions **370** result from operation of the apparatus in monopolar configuration, in which a remote grounding electrode, not shown in FIG. **3**, is attached to a remote part of the patient's body to complete the circuit of electricity conveyed to needles **350** by energy source **320**. In this monopolar configuration, RF current causes heating of the tip regions of the needles **350**, generating thermal damage in tissue regions **370** adjacent to the needle tips that are approximately spherical or slightly elongated in shape.

In one embodiment of the invention, current may be delivered simultaneously to all needles in the array to produce a pattern of thermal damage around the tip of each needle. In alternative embodiments, control module **330** and energy source **320** can be configured to supply electrical current to individual needles, to specific groups of needles within the array, or to any combination of individual needles in any desired temporal sequence. Providing current to different needles at different times during treatment (instead of heating all needles in the array at once) may help to avoid potential local electrical or thermal interactions among needles that can lead to excessive local damage.

In yet another embodiment of the present invention one or more vibrating means, such as a piezoelectric transducer or a small motor with an eccentric weight fixed to the shaft, may be mechanically coupled to housing **340** and/or base **310** that supports the array of needles **350**. Vibrations conductively induced in needles **350** by such vibrating means can facilitate the piercing of the skin by the needle tips and subsequent insertion of the needles into the tissue. The vibrating means can have an amplitude of vibration in the range of about 50-500 μm or, more preferably, between about 100-200 μm. The frequency of the induced vibrations can be from about 10 hz to about 10 khz, more preferably from about 500 hz to about 2 khz, and even more preferably about 1 khz. The particular vibration parameters chosen may depend on the size and material of the needles, the number of needles in the array, and the average spacing of the needles. The vibrating means may further comprise an optional controller capable of adjusting the amplitude and/or frequency of the vibrations.

Additional details and embodiments of the present invention are shown in FIG. **4**. Conductive needles **410** and **415** are

shown attached to base **310**. Insulation **420** covers the shaft of needles **410** and **415** protruding from base **310** except for the region near the lower tip, and electrically insulates each conductive needle shaft from surrounding tissue **305**. Electrical conductors **430** and **431**, which may be wires or the like, extend from an upper portion of needles **410** and **415** respectively, and are connected to the energy source (not shown here). Suitable insulating materials for insulation **420** include, but are not limited to, Teflon®, polymers, glasses, and other nonconductive coatings. A particular material may be chosen as an insulator to facilitate penetration and insertion of needles **410** and **415** into tissue **305**.

Needles **410** and **415** are shown operating in bipolar mode in another embodiment of the present invention. Needle **410** is a positive electrode delivering RF or other current to the tip region of the needle from the energy source via conductor **430**. Needle **415** functions as a grounding electrode that is connected to the ground of the energy source via conductor **431**. In this configuration the applied current will travel through the tissue between the tips of needles **410** and **415**, generating an elongated region of thermal damage **425** around and between the tips of the two needles.

An elongated region of damaged tissue **425** can be created between any two adjacent or nearby needles in the array through proper configuration of control module **330** and energy source **320**. In an embodiment of the present invention, elongated damage regions **425** are formed between several pairs of needles within the array of needles to form a desired damage pattern in the tissue **305**. The regions of thermal damage **325** created in bipolar operation of the apparatus may be formed simultaneously or, alternatively, sequentially, using any combinations of proximate needles in the array to form each region. A wide variety of thermal damage patterns can be created using a single array of needles through appropriate configuration of energy source **320** and control module **330** to deliver predetermined amounts of current between selected pairs of needles. This apparatus thus allows for the creation of complex damage patterns within the tissue **305** that may be macroscopically elongated in preferred directions to produce anisotropic shrinkage and reshaping.

In practicing the methods and apparatus of the present invention, the needles can have a width of about 500-1000 μm or preferably about 700-800 μm. Needles less than 500 μm in diameter may also be used if they are mechanically strong enough. Needles thicker than about 1000 μm in diameter may be undesirable because of the difficulty in forcing larger needles to penetrate the skin and because of the increased propensity for pain and scarring. The length of the needles extending into the skin will depend on the targeted depth for damagng the tissue. A typical depth for targeting collagen in the dermis is about about 1500-2000 μm, although shallower or deeper distances may be preferred for different treatments and regions of the body being treated. Needles within a single array may protrude by different lengths from the base **310** or spacer substrate **315**. This will cause the tips of the needles to be positioned at different depths within the tissue being treated, and allow creation of damaged tissue at more than one depth. This variation in needle depth can achieve formation of damaged tissue over a larger volume within the tissue being treated.

The needle arrays may have any geometry appropriate for the desired treatment being performed. The spacing between adjacent needles is preferably greater than about 1 mm apart, and may be as large as about 2 cm. The spacing between needles in an array need not be uniform, and can be closer in areas where a greater amount of damage or more precise control of damage in the target area of tissue is desired. In one embodiment, the array of needles may comprise pairs of needles separated from adjacent pairs by larger distances. This geometry may be well-suited for inducing damage in bipolar mode between pairs of needles. Needles may also be arranged in a regular or near-regular square or triangular array. In any array geometry, the pattern of damage and resultant tissue reshaping may be controlled with some precision by adjusting the intensity and duration of power transmitted to single needles or pairs of needles.

The amount of energy directed to a given needle will vary depending on the tissue being treated and the desired extent of thermal damage to induce. For typical needle spacings noted above, the energy source should be configured to deliver about 1-100 mJ per needle or pair of needles in the array. It may be preferable to initially use lower amounts of energy and perform two or more treatments over the same target area to better control the damage pattens and extent of reshaping.

In yet another embodiment of the present invention, one or more of the needles in the array may be hollow, such as needle **440** in FIG. **4**. Center channel **450** may be used to deliver a local analgesic such as lidocaine 2% solution from a source (not shown) located within or above base **310** into the tissue **305** to reduce or eliminate pain caused by the thermal damage process.

In yet another embodiment of the present invention, hollow needle **440** is bifunctional, capable of conducting RF current or other energy via conductor **432** and also capable of delivering a local analgesic or the like through center channel **450**. Similar to needles **410** and **415**, bifunctional needle **440** has insulation **445** covering the shaft extending from base **310** except for the region near the lower tip. Analgesic may be supplied to the tissue either before or during application of RF or other current to the needle **450**.

In one embodiment of the invention, one or more of the needles in the array may be bifunctional like needle **440**. Alternatively, one or more needles may be hollow and optionally nonconductive, suitable only for delivering a local analgesic or the like. The array of needles used for a given application may comprise any combination of solid electrodes, bifunctional needles, or hollow nonconductive needles. For example, one type of needle array may comprise pairs of electrode needles operating in bipolar mode, with a hollow needle located between each pair. In this configuration, the hollow needle can deliver analgesic to the tissue between the tips of the electrode needles prior to applying current to the electrodes and causing thermal damage in the numbed tissue.

In yet another embodiment of the present invention, one or more of the needles in the array may be further connected to an electronic detection apparatus and perform the additional function of a probe to detect the presence of a nerve near the tip. The electronic detection apparatus may comprise a source of electrical current in the milliampere range and control means to send small currents on the order of a milliamp to specific needles in the array. Detection of a nerve close to any of the inserted needles of the array is performed by sequential application of small currents to the needles in the array and observation of any visible motor response. If a nerve is detected, control module **330** can be configured to deactivate the needle or needles close to the nerve during the subsequent treatment to avoid damaging the nerve. A nerve detection method based on principles similar to those described herein is disclosed by Urmey et al. in Regional Anesthesia and Pain Medicine 27:3 (May-June) 2002, pp. 261-267.

In still another embodiment, one or more of the needles may be hollow, and a light fiber or light guide is inserted into the hollow needle such that one end of it extends to or slightly protrudes from the needle tip. The other end of the light fiber

or light guide in communication with a source of optical energy. Optical energy supplied to the tip of the light guide or light fiber may then be used to heat the tip, which then heats the surrounding tissue, i.e., the target area, to cause fractional wounding at the needle tip. An array of needles used in accordance with the present invention may comprise a mix of electrode needles and light-guide needles. Alternatively, each needle may carry a light guide and all of the energy used to cause thermal damage may be generated by the optical energy source instead of using RF or other electrical current. A portion of the light guide or light fiber, such as the portion at the tip of the needle, may be configured to absorb energy and facilitate conversion of the optical energy to heat. In these embodiments, the optical energy source may comprise, but is not limited to, a diode laser, a diode-pumped solid state laser, an Er:YAG laser, a Nd:YAG laser, an argon-ion laser, a He—Ne laser, a carbon dioxide laser, an eximer laser, or a ruby laser. The optical energy conveyed by a light guide or light fiber may optionally be continuous or pulsed.

Treatments performed in accordance with the present invention may be used to target collagen in the dermis. This can lead to immediate tightening of the skin and reduction of wrinkles overlying the damaged tissue arising from contraction of the heated collagen. Over time, the thermal damage also promotes the formation of new collagen, which serves to smooth out the skin even more.

An alternative application of the methods of the present invention may be to reduce or eliminate the appearance of cellulite. To achieve this, the arrays of needles are configured to target the dermis and optionally the upper layer of subcutaneous fat directly. Creating dispersed patterns of small thermally-damaged regions in these layers can tighten the networked collagen structure and suppress the protrusion of the subcutaneous fat into the dermal tissue that causes cellulite.

Yet another application of the methods and apparatus of the present invention is to reshape cartilage. It is known that cartilage softens upon heating, and heating it to about 70 degrees C. can soften the cartilage sufficiently to permit reshaping that persists upon cooling. Currently, specialized lasers are used to heat and soften cartilage in the nasal passages for reshaping. Using the methods and apparatus described herein, cartilage can be targeted by an array of needles and heated in a suitably gradual way, using lower power densities and longer times, to provide relatively uniform heating. Shaping of the cartilage is thus possible using a minimally invasive technique that can be used where laser heating may not be feasible.

Any of the thermal damaging and tissue reshaping methods practiced in accordance with the present invention may be performed in a single treatment, or by multiple treatments performed either consecutively during one session or at longer intervals over multiple sessions. Individual or multiple treatments of a given region of tissue can be used to achieve the appropriate thermal damage and desired cosmetic effects.

The invention is further described by the following numbered paragraphs:

1. A tissue reshaping apparatus comprising:

a plurality of needles attached to a base, wherein the base is attached to a housing or part of the housing;

an energy source in communication with one or more of the needles; and

optionally comprising a control module, wherein the control module permits variation of the characteristics of energy supplied by the energy source.

2. The apparatus of paragraph 1 wherein one or more of the needles are electrically conductive and the energy source is configured to supply RF current individually to one or more of the needles.

3. The apparatus of paragraph 2 wherein the energy source and/or control module is located outside of the housing.

4. The appratus of any one of paragraphs 1 to 3 wherein the energy source is a radio frequency (RF) device capable of outputing signals having frequencies in a desired range.

5. The apparatus of any one of paragraphs 1 to 4 wherein the energy source is capable of outputting an AC or DC electric current.

6. The apparatus of any one of paragraphs 1 to 5 wherein the control module provides application-specific settings to the energy source, and wherein the energy source receives the settings, and generates a current directed to and optionally from specified needles for selectable or predetermined durations, intensities, and sequences based on the settings.

7. The apparatus of any one of paragraphs 1 to 6 wherein the needles comprise sharp distal ends capable of piercing the surface of skin tissue and penetrating into the tissue until the lower side of the base contacts the surface of the skin.

8. The apparatus of any one of paragraphs 1 to 7 wherein the control module is configured to deliver controlled amounts of RF current to one or more of the needles.

9. The apparatus of any one of paragraphs 1 to 8 further comprising a spacer substrate comprising a pattern of small holes through which the plurality of needles protrudes.

10. The apparatus of paragraph 9 wherein the substrate is movably attached to the base or the housing and wherein the position of the substrate is adjustable relative to that of the base to control the depth of the needles protruding from the lower surface of the spacer substrate.

11. The apparatus of any one of paragraphs 1 to 10 wherein the base and/or optionally, the spacer substrate, is planar or has a lower surface that is contoured to follow the shape of the region of tissue being treated.

12. The apparatus of any one of paragraphs 1 to 11 wherein the base and/or a spacer substrate further comprises cooling means configured to cool a skin surface to reduce or eliminats pain when the plurality of needles penetrates the skin surface.

13. The apparatus of paragraph 12 wherein said cooling comprises embedded conduits containing circulating coolant or a Peltier device.

14. The apparatus of any one of paragraphs 1 to 13 wherein said apparatus is configured to deliver RF energy to one or more needles in a monopolar configuration.

15. The apparatus of any one of paragraphs 1 to 13 wherein said apparatus is configured to deliver RF energy to one or more needles in a bipolar configuration.

16. The apparatus of any one of paragraphs 1 to 15 further comprising a vibrational means in communication with the base, where said vibrational means comprises a piezoelectric device or a motor having an eccentric weight fixed to its shaft.

17. The apparatus paragraph 16 wherein the vibrational frequency of said vibrating means is between about 10 hz to about 10 khz, between about 500 hz to about 2 khz, or is about 1 khz.

18. The apparatus paragraph 17 wherein the vibrational amplitude of said vibrating means is between about 50-500 μm or between about 100-200 μm.

19. The apparatus of any one of paragraphs 1 to 18 wherein the energy source and the control module are configured to deliver energy to a plurality of pairs of needles in bipolar mode.

20. The apparatus of any one of paragraphs 1 to 19 wherein the diameter of the needles is between about 500-1000 μm or between about 700-800 μm.

21. The apparatus of any one of paragraphs 1 to 20 wherein the average spacing of needles is between about 1 mm and 2 cm, and wherein the needles optionally are not uniformly spaced.

22. The apparatus of any one of paragraphs 1 to 21 wherein one or more of the needles are hollow and are configured to deliver a local analgesic to the tissue surrounding the tip of the needle.

23. The apparatus of any of paragraphs 1 to 22 further comprising an electronic detection device in electrical communication with one or more of the needles that is configured to detect the presence of a nerve near the tip of one or more of the needles.

24. The apparatus of paragraph 23 wherein the detection device is in communication with the control module and the control module is configured to prevent the energy source from supplying energy to any needle if a nerve has been detected near that needle.

25. The apparatus of any of paragraphs 1 to 24 further comprising a source of optical energy and one or more hollow needles containing light fibers or light guides, wherein the apparatus is configured to deliver a controlled amount of electromagnetic energy through the light fiber or light guide and into the tissue surrounding the tip of the hollow needle.

26. The apparatus of paragraph 25 wherein the optical energy source comprises a diode laser, a diode-pumped solid state laser, an Er:YAG laser, a Nd:YAG laser, an argon-ion laser, a He—Ne laser, a carbon dioxide laser, an eximer laser, or a ruby laser, and wherein the electromagnetic energy conveyed by the light guide or light fiber is continuous or pulsed.

27. A method of treating skin comprising the steps of:

providing a plurality of needles attached to a base;

providing an energy source in communication with one or more of the needles;

inserting the needles into the skin to a predetermined depth; and

supplying energy to more than one of the needles to induce a pattern of damage in the tissue surrounding the needles.

28. The method of paragraph 27 further comprising:

providing a control module, wherein the control module permits variation of the characteristics of energy supplied by the energy source.

29. The method of paragraph 28 further comprising:

providing cooling means to cool the surface of the skin, and optionally the plurality of needles, before inserting the needles into the skin.

30. The method of paragraph 29 wherein the energy is RF current and the needles are insulated except near their tips.

31. The method of paragraph 30 further comprising:

providing a detection device in communication with one or more of the needles;

supplying low current to one or more of the needles sequentially to detect the presence of a nerve near the needles; and

preventing the energy source from supplying energy to any needle if a nerve has been detected near that needle.

32. The method of paragraph 27 further comprising:

providing one or more hollow needles attached to the base and injecting an analgesic through the hollow needles into the surrounding tissue after the needles are inserting into the skin.

33. The method of paragraph 29 further comprising:

providing hollow needles containing light fibers or light guides in communication with the energy source, wherein the energy source is a source of optical energy;

supplying energy to the light fibers or light guides to induce thermal damage in a portion of the tissue surrounding the hollow needles.

Having thus described in detail preferred embodiments of the present invention, it is to be understood that the invention defined by the above paragraphs is not to be limited to particular details set forth in the above description as many apparent variations thereof are possible without departing from the spirit or scope of the present invention.

What is claimed is:

1. An apparatus for tissue treatment, comprising:

a base;

a plurality of needles attached to the base;

an energy source provided in communication with at least one of the needles;

a spacer arrangement that is movably attached to the base for controlling penetration depths of the needles; and

a control module configured to vary characteristics of energy supplied by the energy source.

2. The apparatus of claim **1** wherein more than one of the needles are electrically conductive, and wherein the energy source is configured to supply radio frequency electromagnetic energy to individual ones of the needles.

3. The apparatus of claim **1**, wherein the spacer arrangement comprises a substrate, wherein the position of the substrate is adjustable relative to that of the base to control a distance between distal ends of the needles and a surface of the substrate.

4. The apparatus of claim **1**, wherein at least one of the base or the substrate further comprises a cooling arrangement configured to cool a skin surface, and wherein the cooling arrangement comprises at least one of an embedded conduit configured to circulate a coolant or a Peltier device.

5. The apparatus of claim **1**, further comprising a vibrating arrangement provided in communication with the base.

6. The apparatus of claim **1**, wherein the plurality of needles are provided as a plurality of pairs of needles such that a distance between the two needles in a pair of needles is less than a distance between each of the two needles and any other needle in the array, and wherein the energy source and the control module are configured to deliver radio frequency electromagnetic energy to the pairs of needles in bipolar mode.

7. The apparatus of claim **1**, wherein at least one of the needles is nonconductive and hollow, and is configured to deliver a local analgesic to tissue proximal to a distal end of the needle.

8. The apparatus of claim **1**, further comprising:

a source of optical energy; and

at least one optical needle comprising at least one of a light fiber or a light guide, wherein the distal ends of the needles are configured to penetrate into at least one of the dermis or subdermal tissue, and wherein the apparatus is configured to deliver a controlled amount of optical energy through the at least one optical needle and into tissue proximal to a portion of the at least one optical needle.

9. The apparatus of claim **8**, wherein a portion of the at least one needle is configured to absorb a portion of the optical energy and convert the optical energy to thermal energy.

10. The apparatus of claim **1**, wherein the plurality of needles protrude a plurality of distances from the base.

11. An apparatus for dermatological treatment, comprising:

a base;

a plurality of needles attached to the base;

a spacer arrangement that is movably attached to the base for controlling penetration depths of the needles;

an energy source provided in communication with at least one of the needles; and

a control module configured to vary characteristics of energy supplied by the energy source,

wherein the plurality of needles protrude a plurality of distances from the base.

12. The apparatus of claim **11**, wherein the energy source is a source of electromagnetic energy.

13. The apparatus of claim **11**, wherein a plurality of the needles are electrically conductive, and wherein the energy source is configured to supply radio frequency electromagnetic energy to individual ones of the needles.

14. The apparatus of claim **11**, wherein the plurality of needles are provided as a plurality of pairs of needles such that a distance between the two needles in a pair of needles is less than a distance between each of the two needles and any other needle, and wherein the energy source and the control module are configured to deliver radio frequency electromagnetic energy to the pairs of needles in bipolar mode.

15. The apparatus of claim **11**, further comprising:

at least one optical needle comprising at least one of a light fiber or a light guide,

wherein the apparatus is configured to deliver a controlled amount of optical energy through the at least one optical needle and into tissue proximal to a portion of the at least one optical needle,

wherein the energy source comprises a source of optical energy.

16. The apparatus of claim **11**, wherein the plurality of needles are configured to provide a pattern of localized regions of thermal damage within a dermal region.

17. The apparatus of claim **11**, wherein the spacer arrangement comprises a substrate, and wherein a position of the substrate relative to a position of the base is adjustable to control a distance between distal ends of the needles and a surface of the substrate.

18. An apparatus for tissue treatment, comprising:

a base;

a plurality of needles attached to the base;

a spacer arrangement that is movably attached to the base for controlling penetration depths of the needles;

an energy source provided in communication with at least one of the needles; and

a control module configured to vary characteristics of energy supplied by the energy source,

wherein the plurality of needles are provided as a plurality of pairs of needles such that a distance between the two needles in a pair of needles is less than a distance between each of the two needles and any other needle in the array, and wherein the energy source and the control module are configured to deliver radio frequency electromagnetic energy to the pairs of needles in bipolar mode.

19. The apparatus of claim **1**, wherein the plurality of needles are configured to provide a pattern of localized regions of thermal damage within a dermal region of the tissue.

20. The apparatus of claim **18**, wherein the plurality of needles are configured to provide a pattern of localized regions of thermal damage within a dermal region of the tissue.

21. The apparatus of claim **18**, wherein the spacer arrangement comprises a substrate, and wherein a position of the substrate relative to a position of the base is adjustable to control a distance between distal ends of the needles and a surface of the substrate.

* * * * *