US009320536B2

(12) **United States Patent**
Na

(10) **Patent No.: US 9,320,536 B2**
(45) **Date of Patent: Apr. 26, 2016**

(54) **METHOD, SYSTEM, AND APPARATUS FOR DERMATOLOGICAL TREATMENT**

(76) Inventor: **Jongju Na**, Songpa-Gu (KR)

(*) Notice: Subject to any disclaimer, the term of this patent is extended or adjusted under 35 U.S.C. 154(b) by 152 days.

(21) Appl. No.: **13/825,083**

(22) PCT Filed: **Feb. 22, 2012**

(86) PCT No.: **PCT/KR2012/001335**

§ 371 (c)(1),
(2), (4) Date: **Jan. 20, 2014**

(87) PCT Pub. No.: **WO2012/118293**

PCT Pub. Date: **Sep. 7, 2012**

(65) **Prior Publication Data**

US 2014/0128685 A1 May 8, 2014

(51) **Int. Cl.**

A61B 1/06	(2006.01)
A61B 17/32	(2006.01)
A61N 1/30	(2006.01)
A61M 37/00	(2006.01)

(52) **U.S. Cl.**

CPC ***A61B 17/320068*** (2013.01); ***A61B 1/06*** (2013.01); ***A61M 37/00*** (2013.01); ***A61N 1/30*** (2013.01); *A61M 37/0015* (2013.01); *A61M 2037/0007* (2013.01); *A61M 2037/0046* (2013.01); *A61M 2037/0061* (2013.01)

(58) **Field of Classification Search**

CPC A61B 17/320068; A61B 1/06; A61B 1/20; A61N 1/30; A61N 5/0616; A61M 37/00; A61M 37/0015; A61M 2037/0007; A61M 2037/0046; A61M 2037/0061

USPC 600/249; 601/2; 604/20, 21, 46, 117; 606/9; 607/102, 189; 424/1.11

See application file for complete search history.

(56) **References Cited**

U.S. PATENT DOCUMENTS

6,890,319	B1 *	5/2005	Crocker	604/131
7,618,429	B2 *	11/2009	Mulholland	606/186
7,824,394	B2 *	11/2010	Manstein	606/9
2007/0073217	A1 *	3/2007	James	604/46
2007/0142885	A1 *	6/2007	Hantash et al.	607/102
2007/0231255	A1 *	10/2007	Barolet et al.	424/1.11
2007/0276318	A1 *	11/2007	Henley	604/20
2008/0269666	A1 *	10/2008	Wang et al.	604/21
2009/0312691	A1 *	12/2009	Kim et al.	604/22

* cited by examiner

Primary Examiner — Jerry Cumberledge
Assistant Examiner — David C Comstock
(74) *Attorney, Agent, or Firm* — Merle W. Richman, Esq.

(57) **ABSTRACT**

Embodiments of dermalogical cell treatment are described generally herein. Other embodiments may be described and claimed.

20 Claims, 21 Drawing Sheets

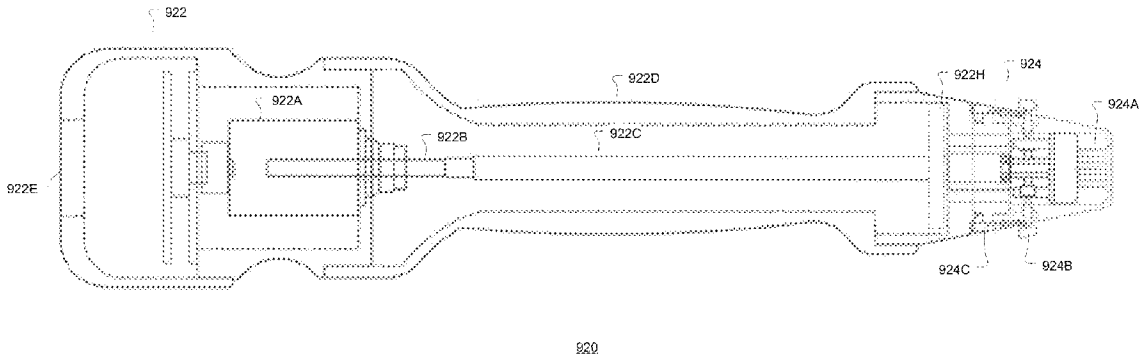

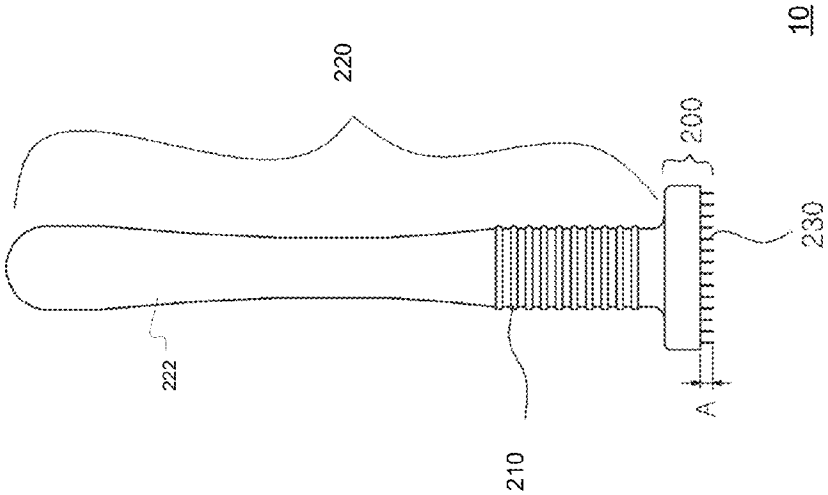

FIGURE 1B

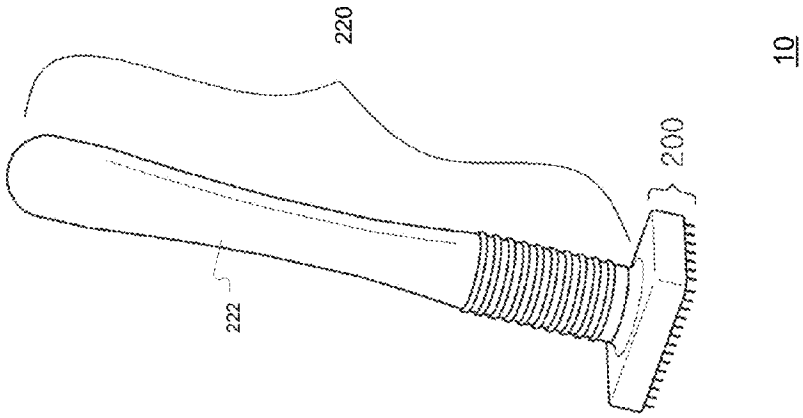

FIGURE 1A

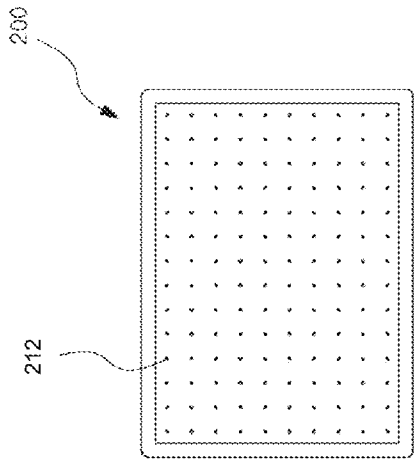

FIGURE 1D

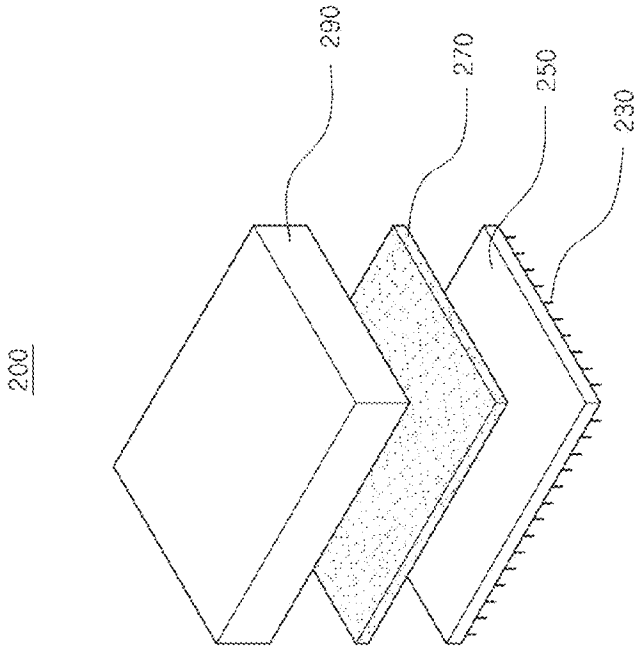

FIGURE 1C

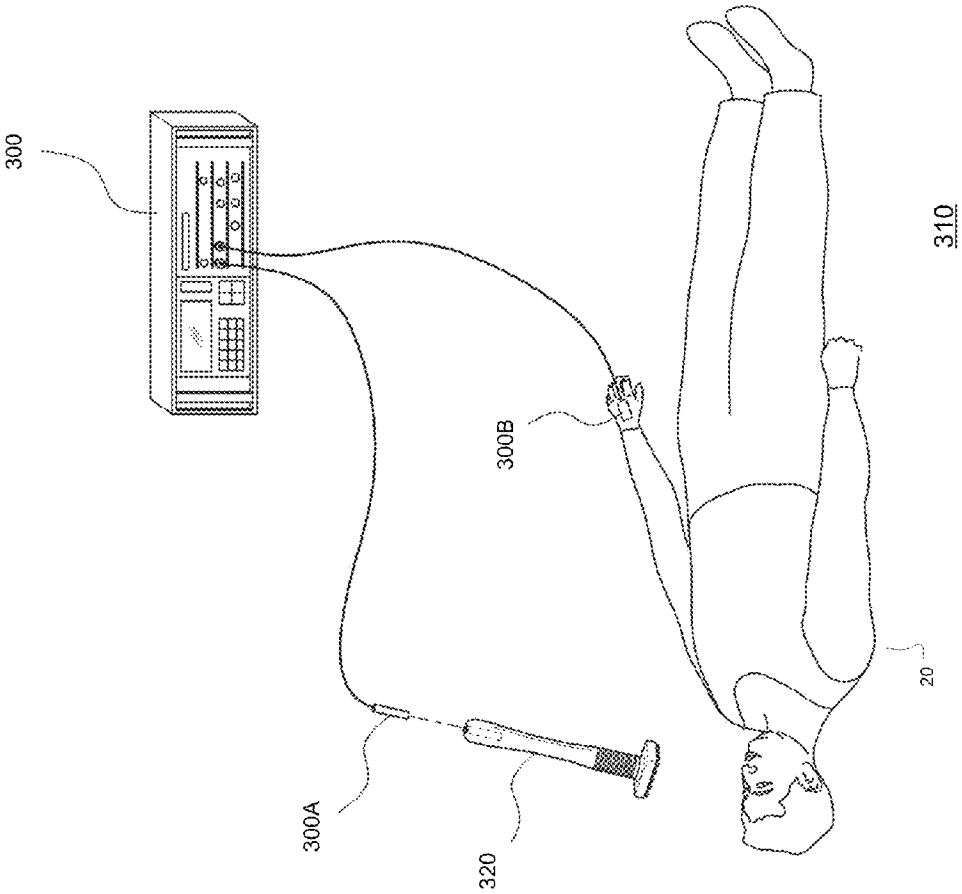

FIGURE 2A

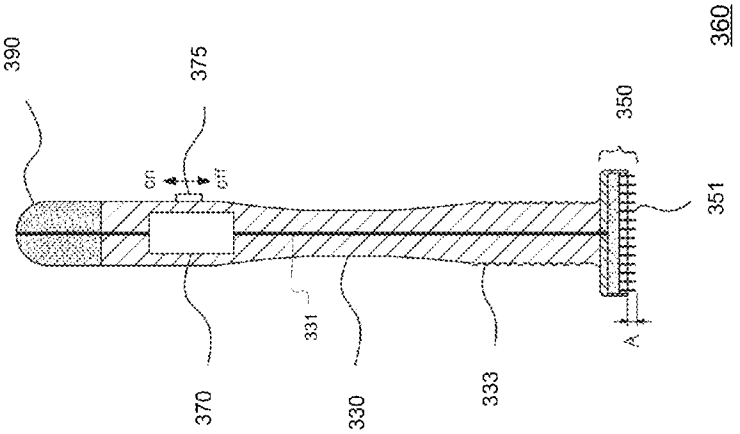

FIGURE 2C

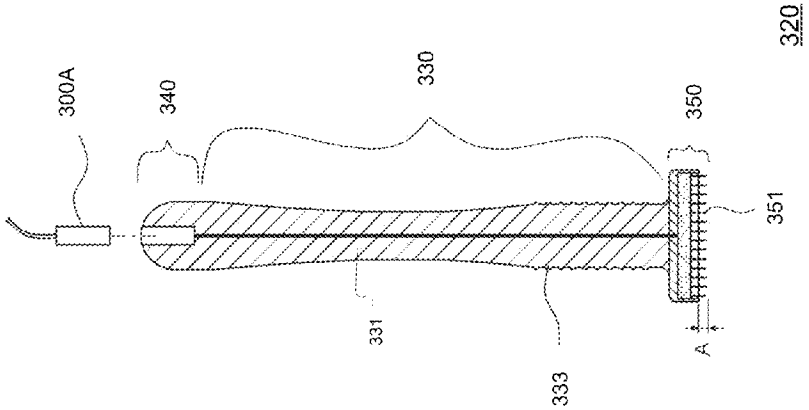

FIGURE 2B

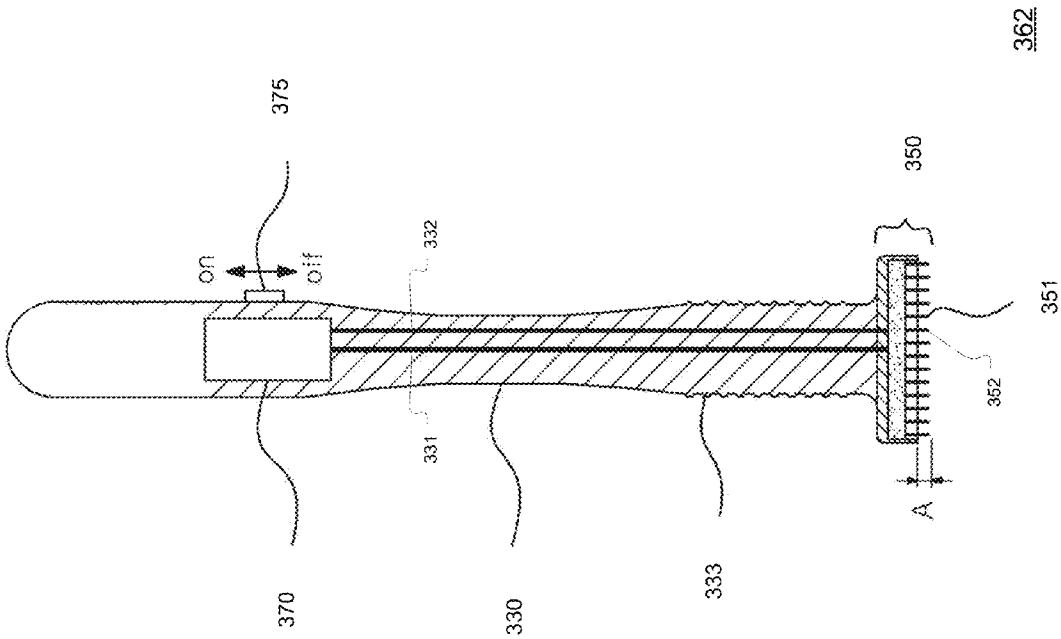

FIGURE 2D

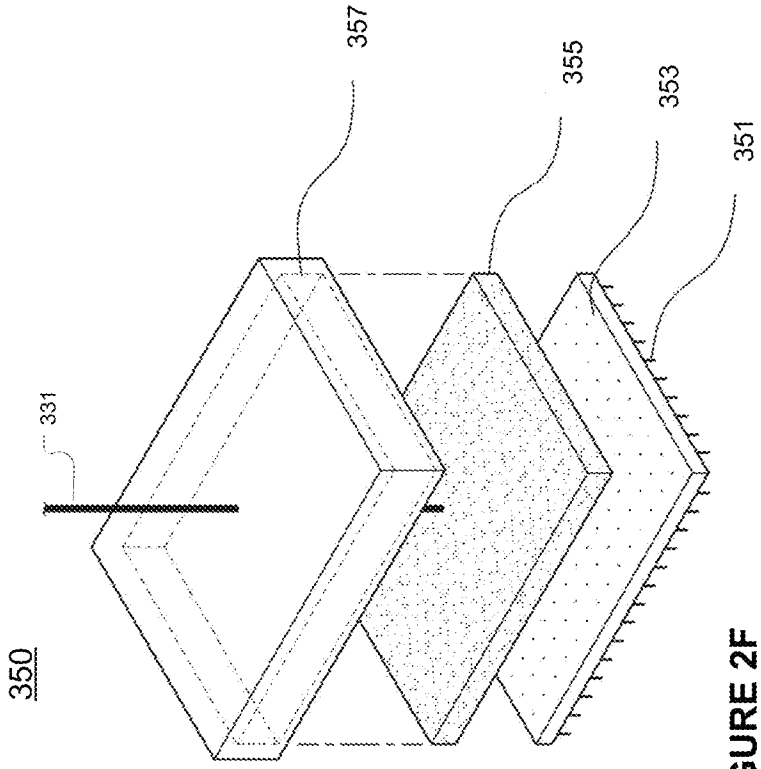

FIGURE 2F

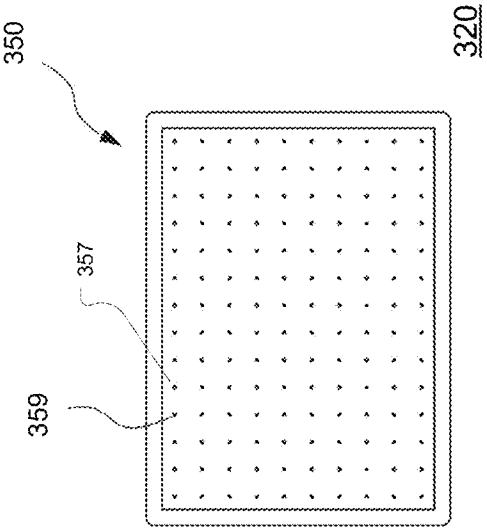

FIGURE 2E

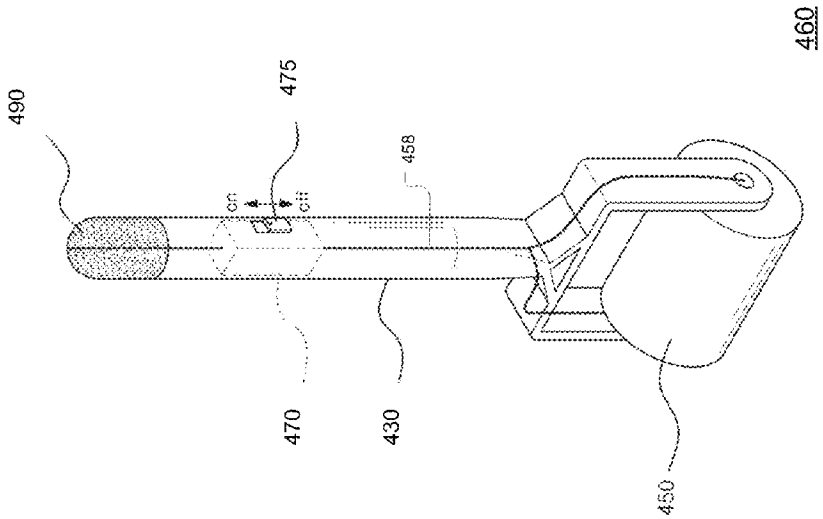

FIGURE 3B

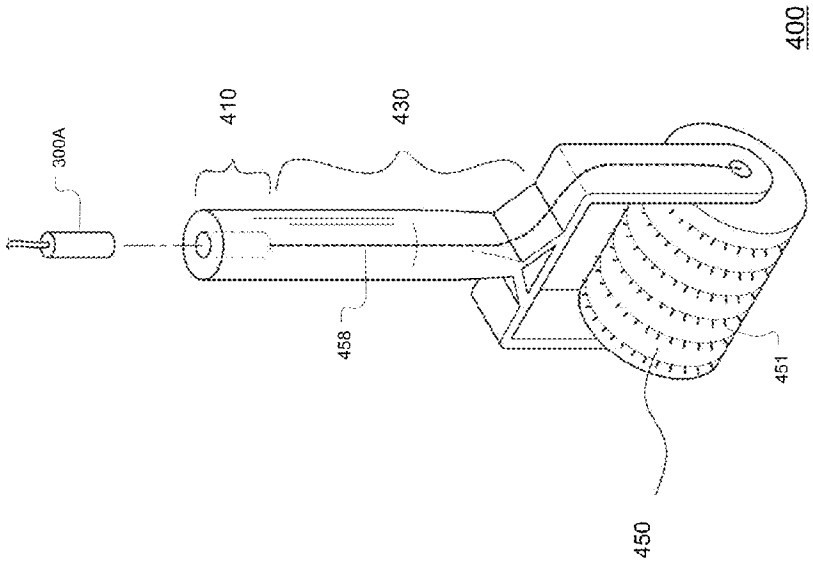

FIGURE 3A

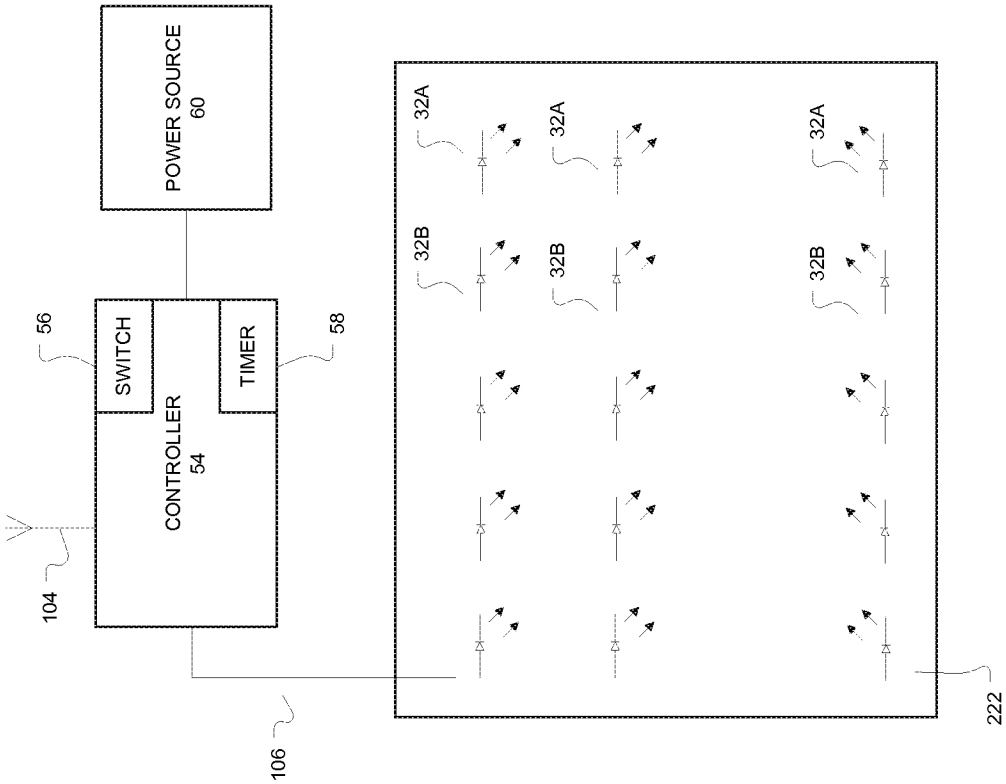

510

FIGURE 4B

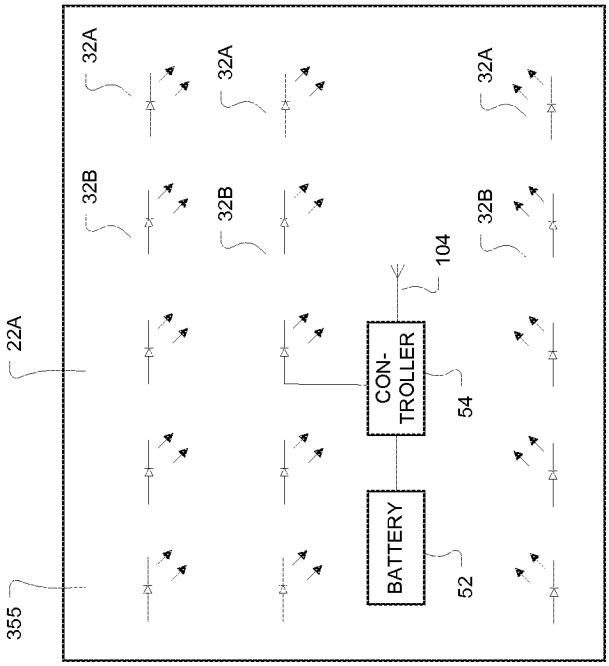

520

FIGURE 4A

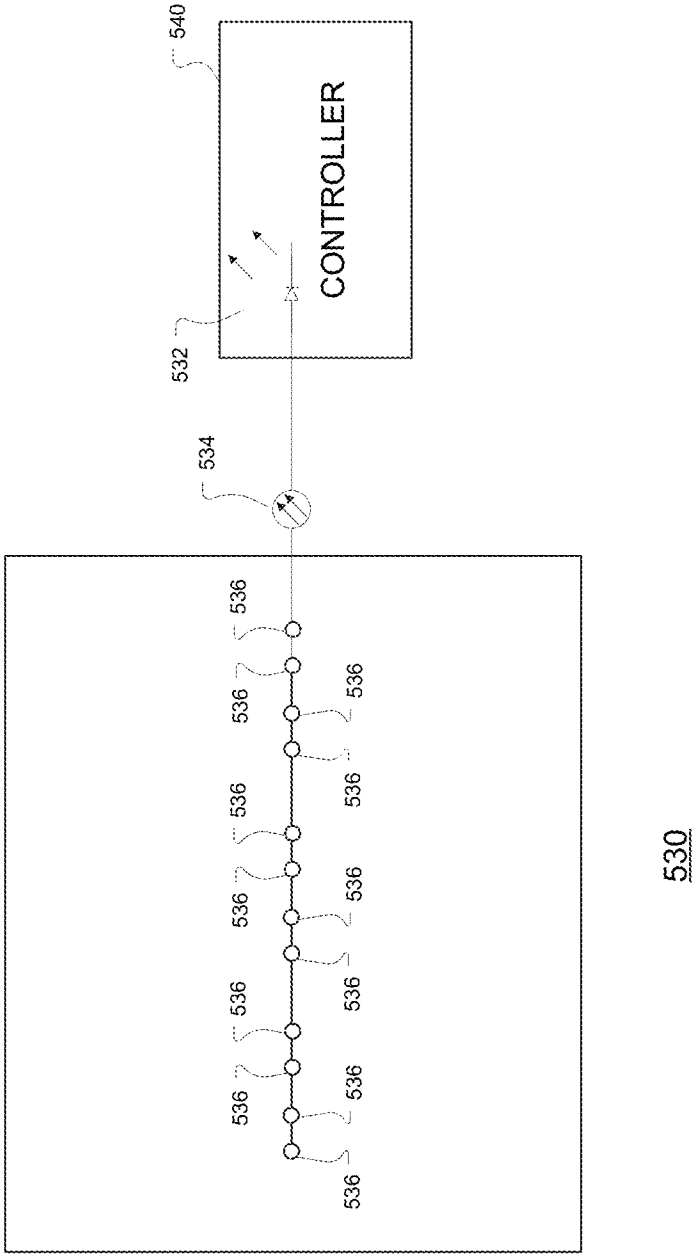
540
CONTROLLER
532
534
536
536
536
536
536
536
536
536
536
536
530

FIGURE 4C

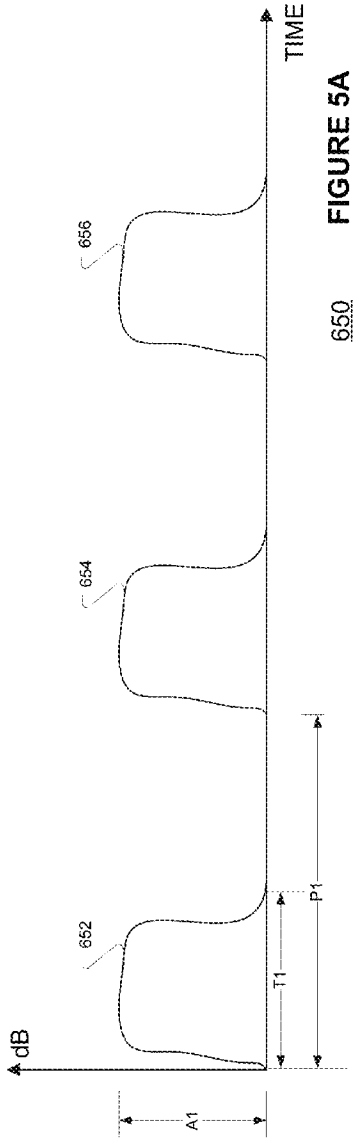

650 FIGURE 5A

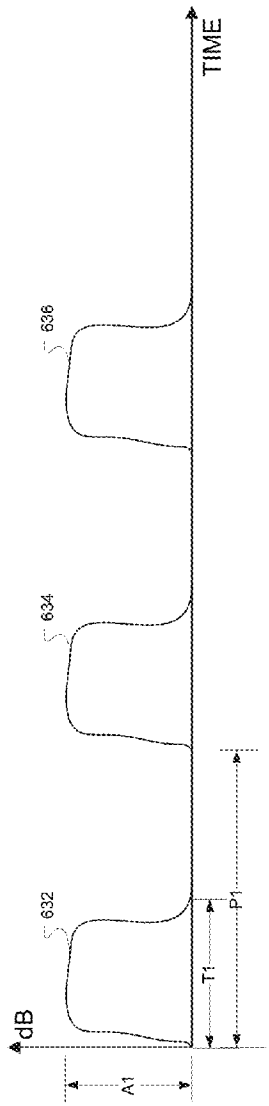

630

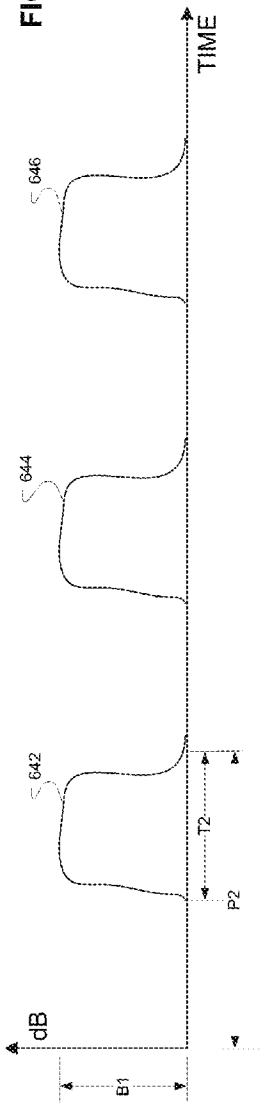

640

FIGURE 5B

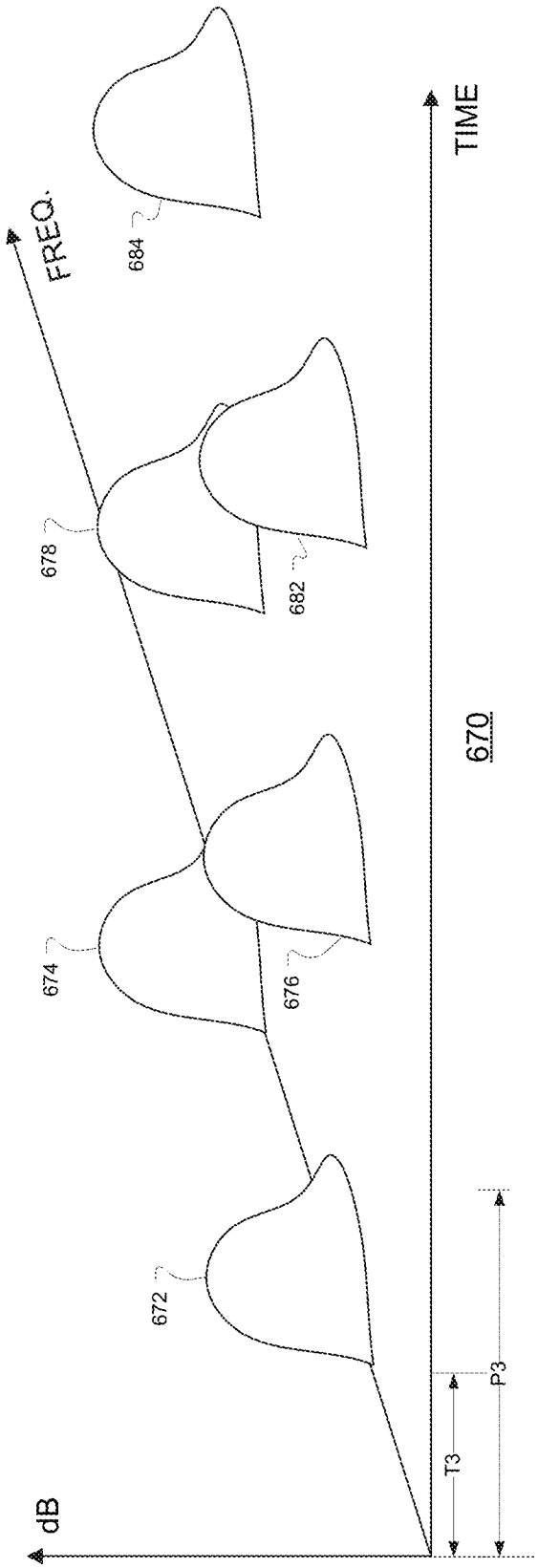

FIGURE 6

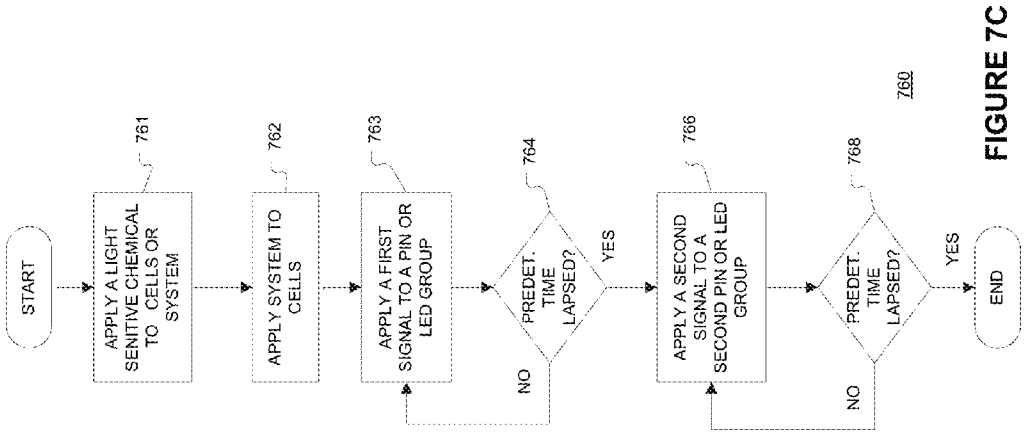

FIGURE 7C

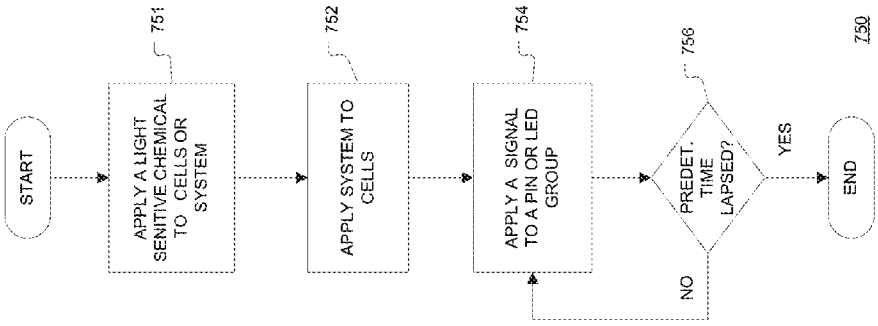

FIGURE 7B

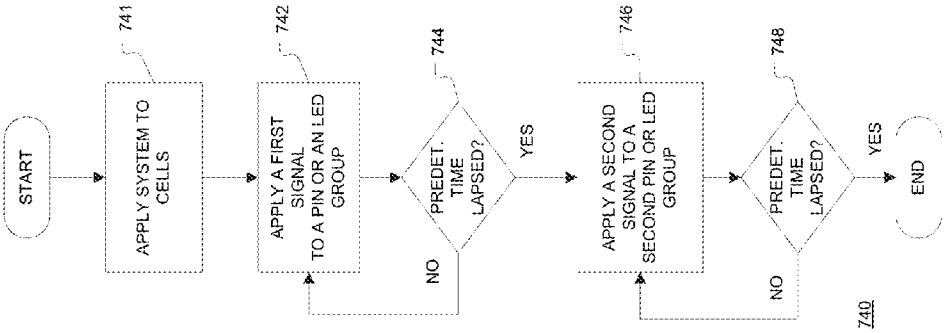

FIGURE 7A

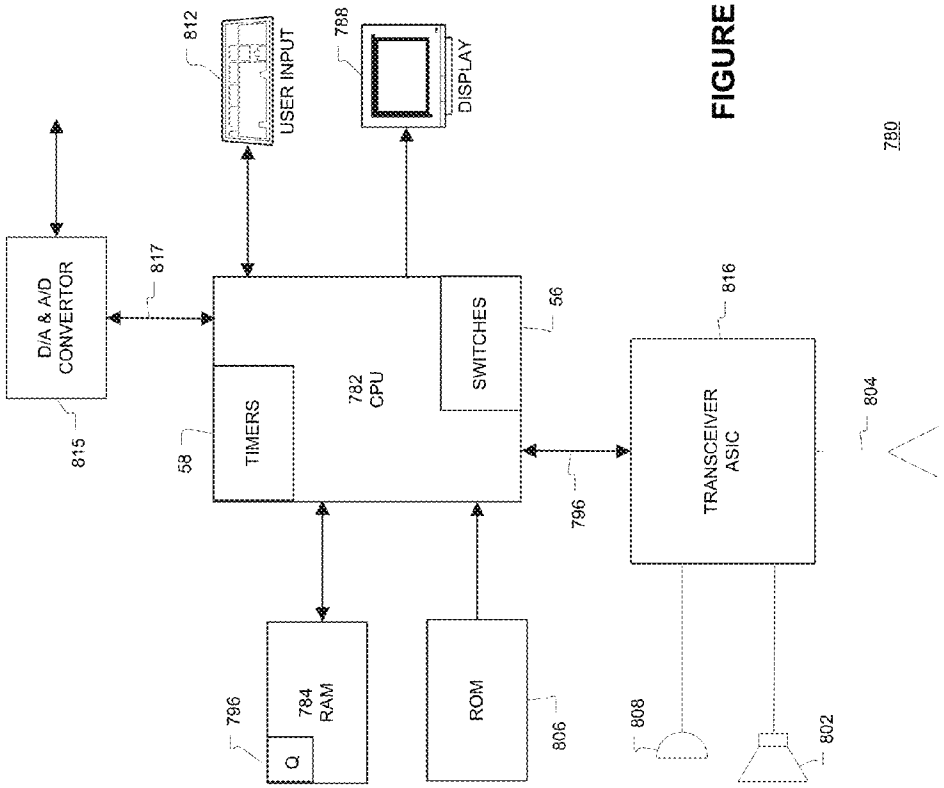
D/A & A/D CONVERTOR
815
817
812
USER INPUT
788
DISPLAY
58
TIMERS
782 CPU
SWITCHES
56
796
816
TRANSCEIVER ASIC
804
796
Q
784 RAM
ROM
806
808
802
780

FIGURE 8

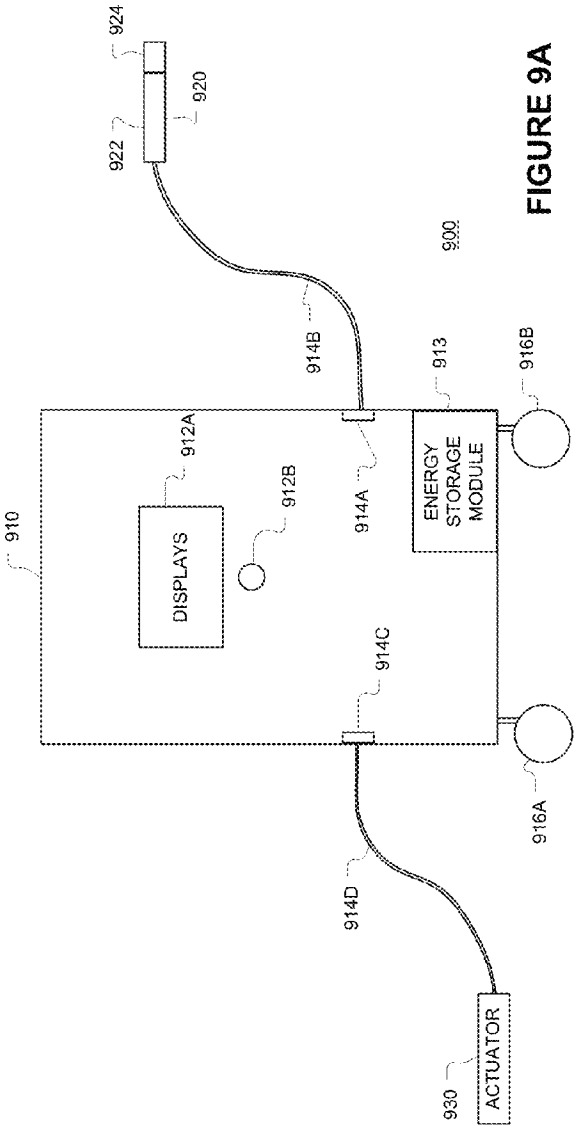

FIGURE 9A

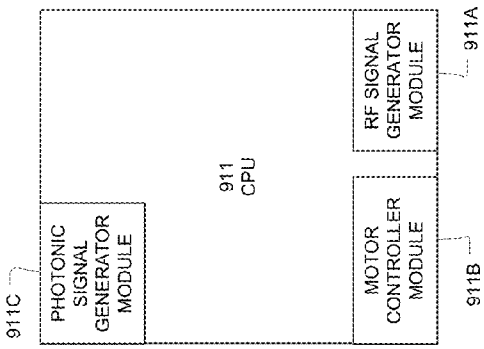

FIGURE 9B

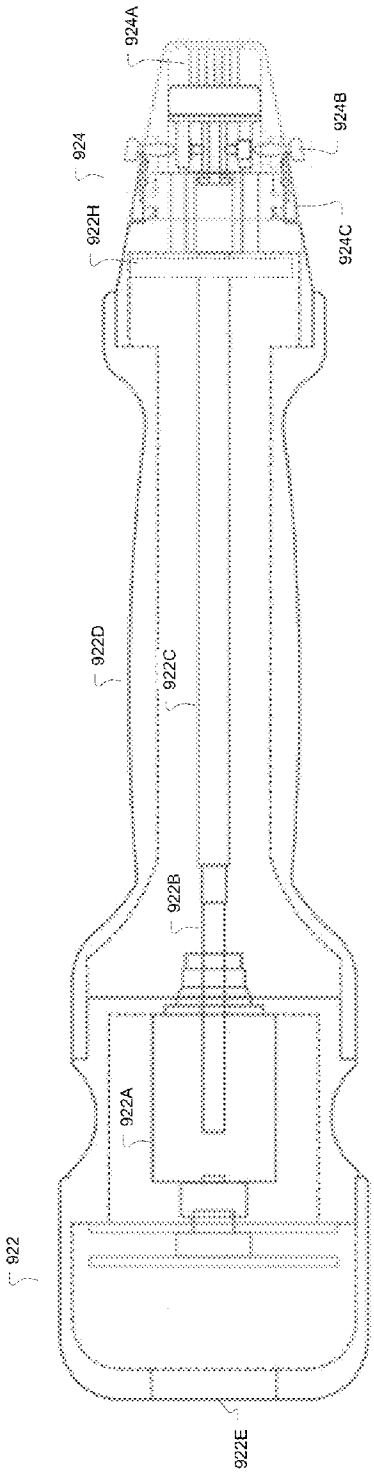

FIGURE 9C

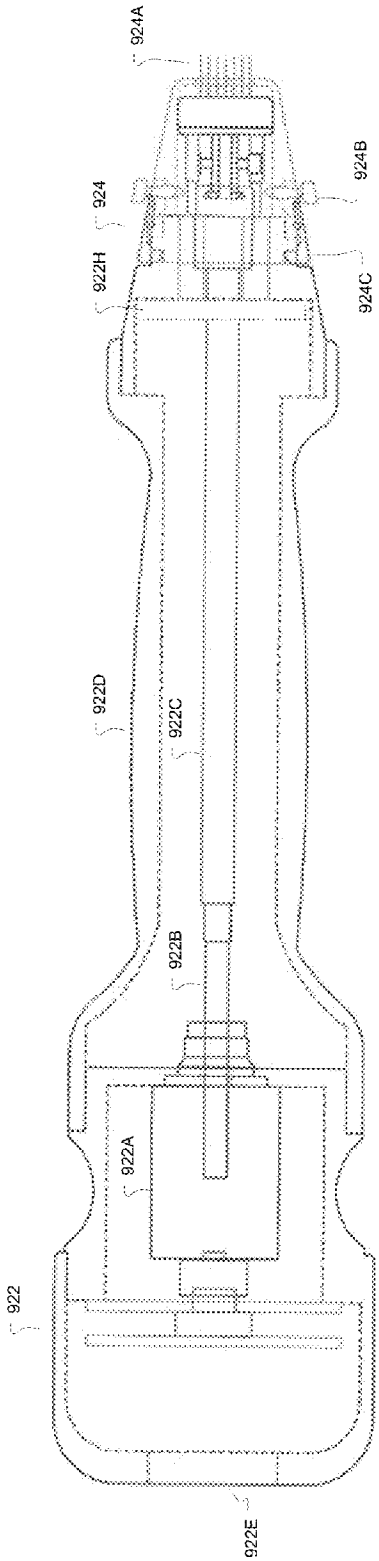

FIGURE 9D

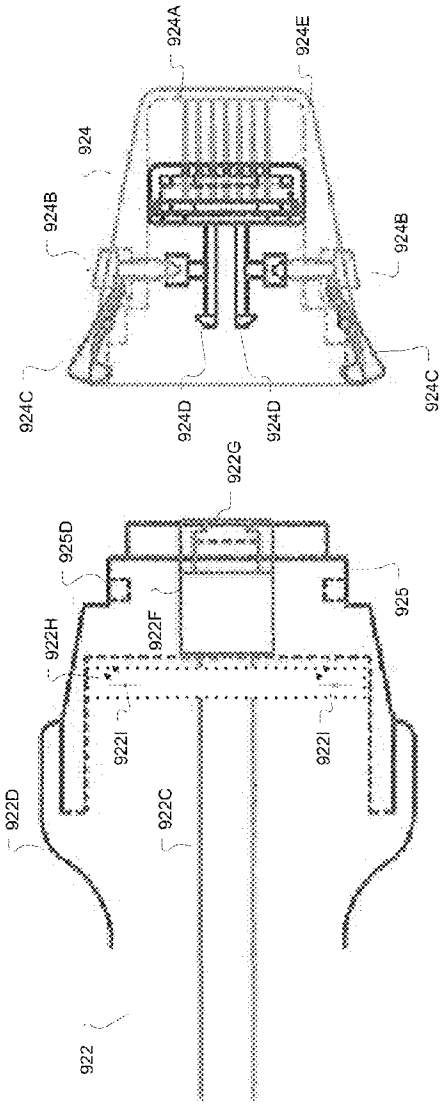

FIGURE 10A

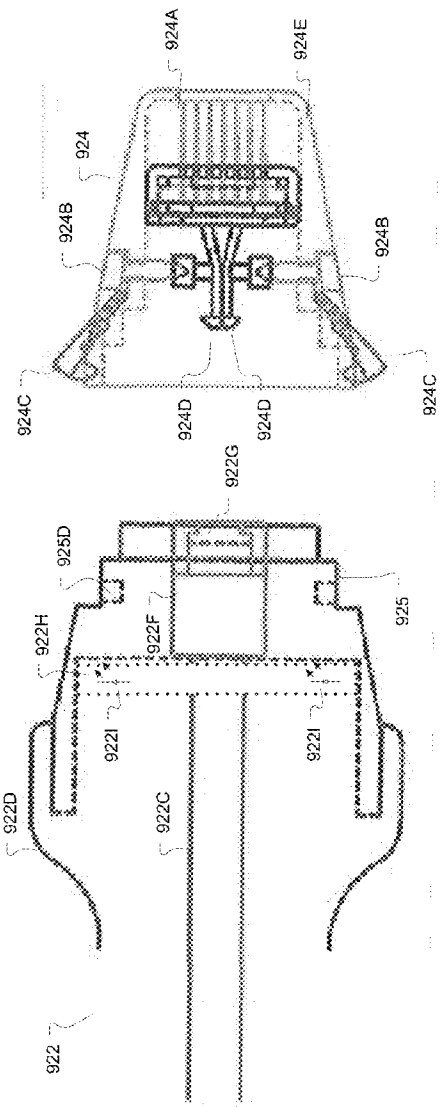

FIGURE 10B

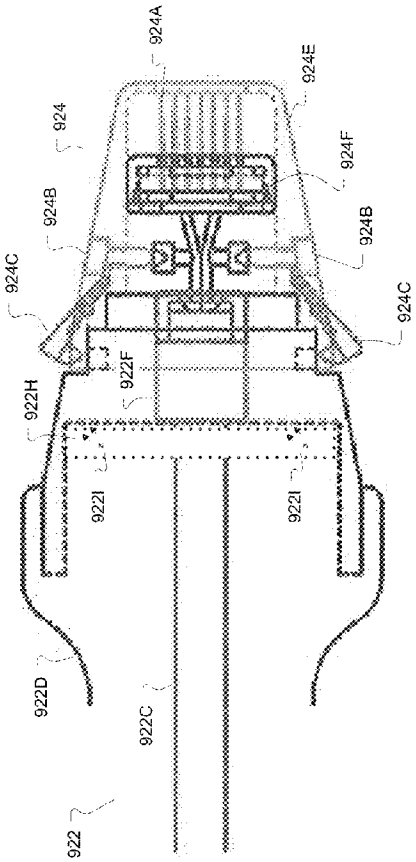

FIGURE 10C

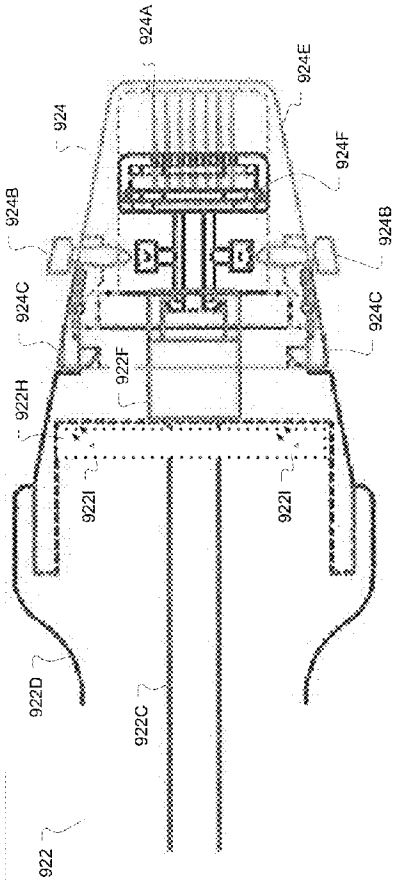

FIGURE 10D

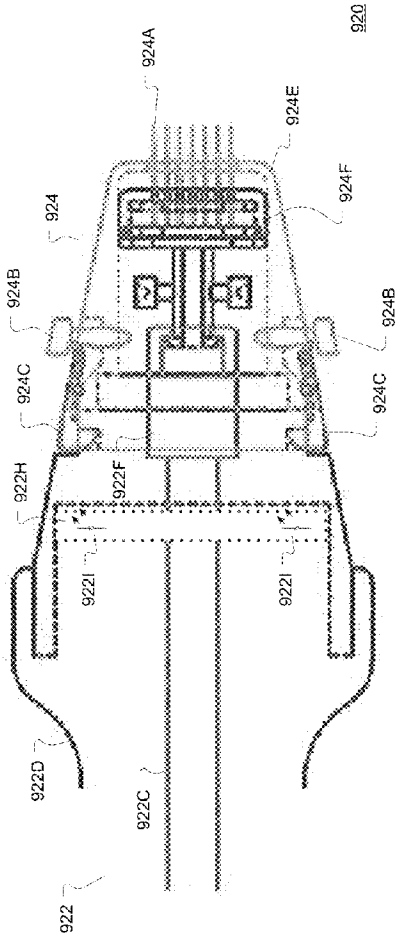

FIGURE 10E

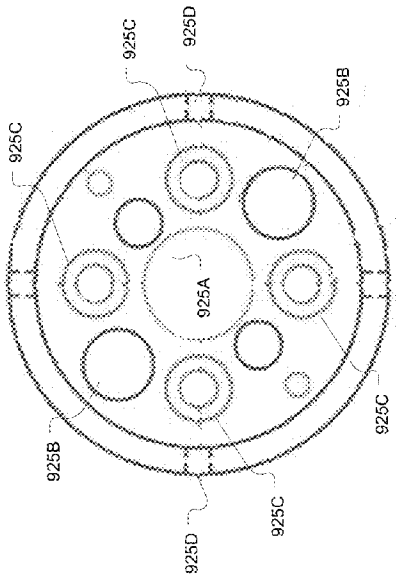

FIGURE 10F

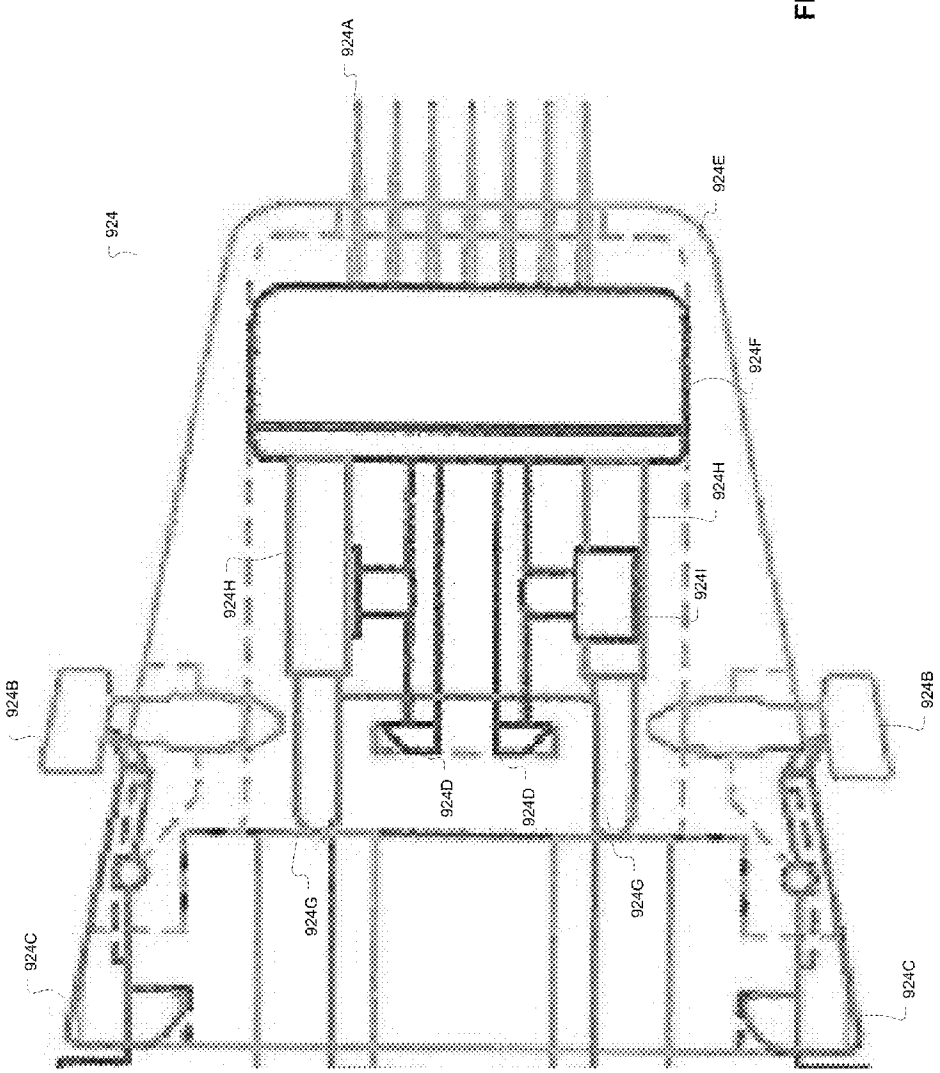
924
924A
924E
924F
924H
924H
924I
924B
924B
924D
924D
924G
924G
924C
924C

FIGURE 11A

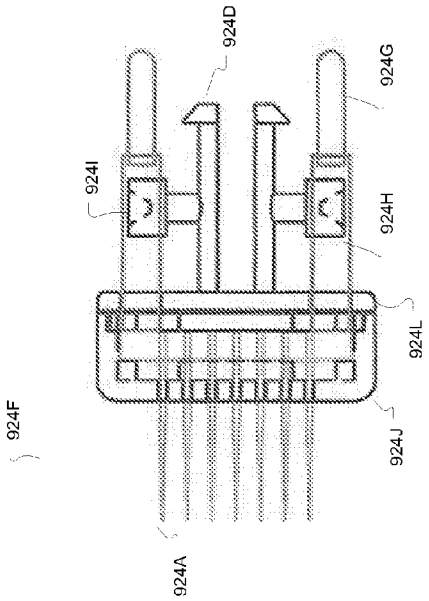

FIGURE 11B

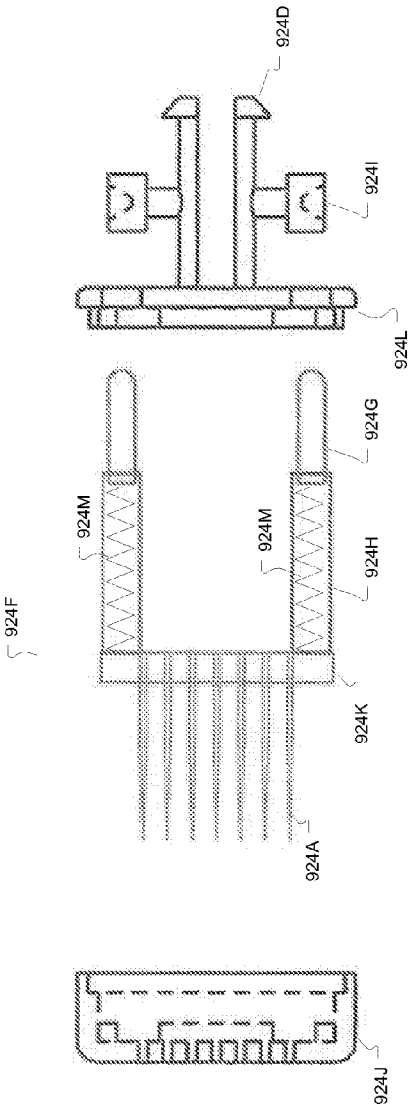

FIGURE 11C

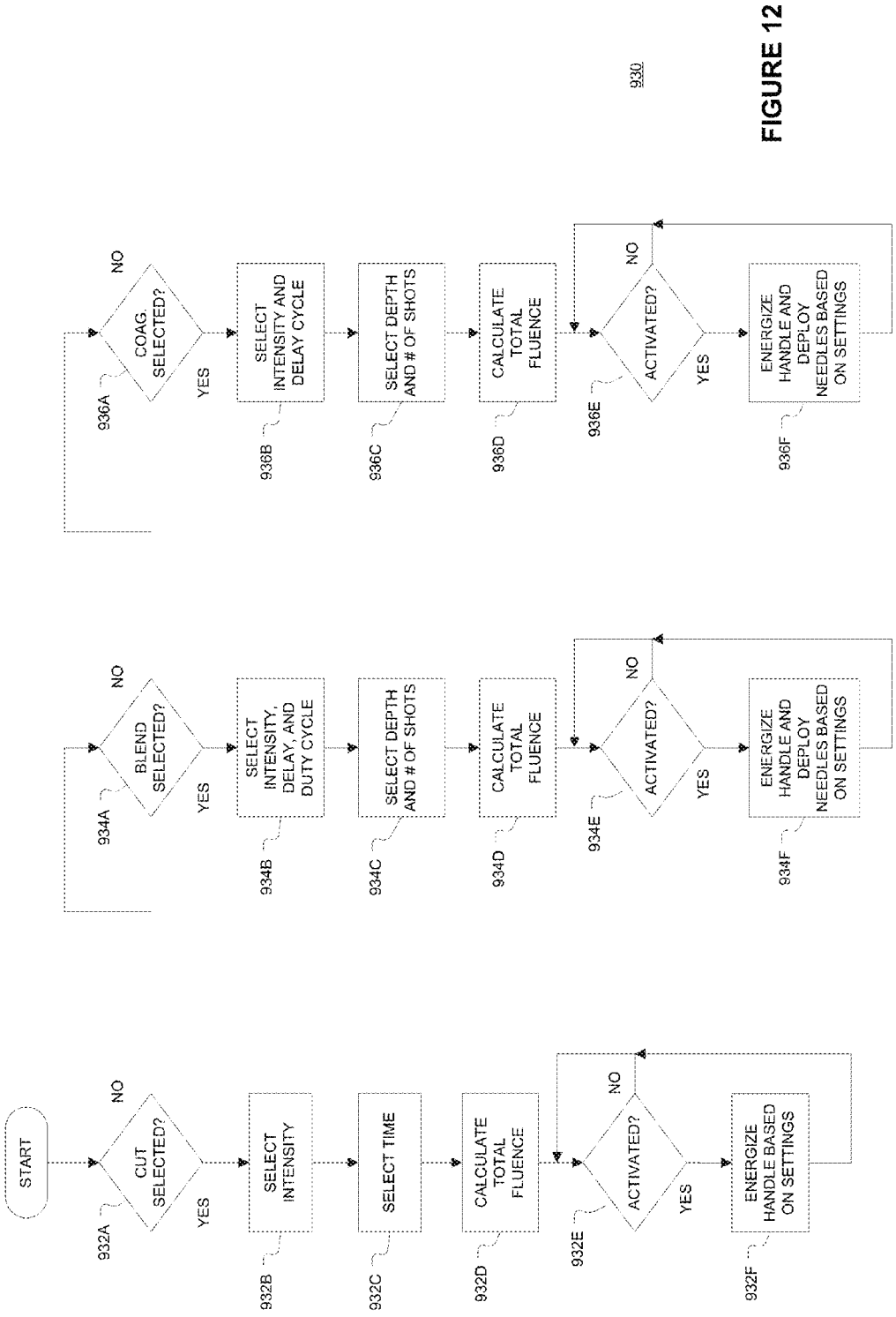
930
START
CUT SELECTED?
932A
YES
NO
SELECT INTENSITY
932B
SELECT TIME
932C
CALCULATE TOTAL FLUENCE
932D
ACTIVATED?
932E
YES
NO
ENERGIZE HANDLE BASED ON SETTINGS
932F
BLEND SELECTED?
934A
YES
NO
SELECT INTENSITY, DELAY, AND DUTY CYCLE
934B
SELECT DEPTH AND # OF SHOTS
934C
CALCULATE TOTAL FLUENCE
934D
ACTIVATED?
934E
YES
NO
ENERGIZE HANDLE AND DEPLOY NEEDLES BASED ON SETTINGS
934F
COAG. SELECTED?
936A
YES
NO
SELECT INTENSITY AND DELAY CYCLE
936B
SELECT DEPTH AND # OF SHOTS
936C
CALCULATE TOTAL FLUENCE
936D
ACTIVATED?
936E
YES
NO
ENERGIZE HANDLE AND DEPLOY NEEDLES BASED ON SETTINGS
936F

FIGURE 12

METHOD, SYSTEM, AND APPARATUS FOR DERMATOLOGICAL TREATMENT

CROSS REFERENCE TO RELATED APPLICATIONS

The present application claims the benefit of priority to Republic of Korea Application Number 10-2008-0076993, entitled "Electrical system, skin, skin care and cosmetic electricity," filed on Aug. 6, 2008, priority thereto claimed in PCT Application Number PCT/US2008/074131, entitled "METHOD, SYSTEM, AND APPARATUS FOR DERMALOGICAL TREATMENT", filed on Aug. 22, 2008, which is the PCT application for the national stage entry of U.S. application Ser. No. 13/060,274, entitled "METHOD, SYSTEM, AND APPARATUS FOR DERMALOGICAL TREATMENT", filed on Feb. 22, 2011, priority thereto is claimed in PCT Application Number PCT/KR/2012001335 filed on Feb. 22, 2012, which the present application is a National stage entry thereof, the entirety of each is incorporated by reference.

TECHNICAL FIELD

Various embodiments described herein relate generally to treating dermalogical tissue, including systems, and methods used in treating dermalogical tissue.

BACKGROUND INFORMATION

It may be desirable to treat dermalogical tissue; the present invention provides such treatment.

BRIEF DESCRIPTION OF THE DRAWINGS

FIG. **1**A is a simplified isometric diagram of a dermalogical treatment apparatus according to various embodiments.

FIG. **1**B is a simplified, side diagram of the dermalogical treatment apparatus according to various embodiments.

FIG. **1**C is a simplified, exploded layer view of the dermalogical treatment apparatus according to various embodiments.

FIG. **1**D is a simplified view of a layer of a dermalogical treatment apparatus according to various embodiments.

FIG. **2**A is a simplified isometric diagram of a dermalogical treatment architecture according to various embodiments.

FIG. **2**B is a simplified cross-sectional diagram of a dermalogical treatment apparatus according to various embodiments.

FIG. **2**C is a simplified cross-sectional diagram of another dermalogical treatment apparatus according to various embodiments.

FIG. **2**D is a simplified cross-sectional diagram of another dermalogical treatment apparatus according to various embodiments.

FIG. **2**E is a simplified view of a layer of a dermalogical treatment apparatus according to various embodiments.

FIG. **2**F is a simplified, exploded view of layers of the dermalogical treatment apparatus according to various embodiments.

FIG. **3**A is a simplified isometric diagram of a dermalogical treatment apparatus according to various embodiments.

FIG. **3**B is a simplified isometric diagram of another dermalogical treatment apparatus according to various embodiments.

FIG. **4**A is a simplified view of a layer of a dermalogical treatment apparatus according to various embodiments.

FIG. **4**B is a simplified view of a layer and apparatus of a dermalogical treatment system according to various embodiments.

FIG. **4**C is a simplified view of a layer and apparatus of a dermalogical treatment system according to various embodiments.

FIGS. **5**A-**6** are diagrams of signals that may be applied to one or more dermalogical treatment systems according to various embodiments.

FIG. **7**A-**7**C are flow diagrams illustrating dermalogical treatment system processing algorithms according to various embodiments.

FIG. **8** is a block diagram of an article according to various embodiments.

FIG. **9**A is a simplified block diagram of a dermalogical treatment architecture according to various embodiments.

FIG. **9**B is a block diagram of an article according to various embodiments that may be employed in architecture of FIG. **9**A.

FIG. **9**C is a simplified cross-sectional diagram of a cartridge based dermalogical treatment apparatus with the needles retracted according to various embodiments.

FIG. **9**D is a simplified cross-sectional diagram of a cartridge based dermalogical treatment apparatus with the needles deployed according to various embodiments.

FIG. **10**A-**10**D are simplified, partial, cross-sectional diagrams of a cartridge in various stages of attachment to a dermalogical treatment apparatus according to various embodiments.

FIG. **10**E is a simplified, partial, cross-sectional diagram of a dermalogical treatment apparatus with needles deployed according to various embodiments.

FIG. **10**F is a simplified cross-sectional diagram of a cartridge based dermalogical treatment apparatus cartridge interface according to various embodiments.

FIG. **11**A is a simplified, partial, cross-sectional diagram of a dermalogical treatment apparatus cartridge coupled to a handle with needles deployed according to various embodiments.

FIG. **11**B is a simplified, cross-sectional diagram of a cartridge needle assembly according to various embodiments.

FIG. **11**C is a simplified, cross-sectional, exploded diagram of a cartridge needle assembly according to various embodiments.

FIG. **12** is a flow diagram illustrating a dermalogical treatment system processing algorithms according to various embodiments.

DETAILED DESCRIPTION

FIG. **1**A is a simplified isometric diagram and FIG. **1**B is a simplified side view of a dermalogical treatment apparatus **10** according to various embodiments. The apparatus **10** may include a user handle **220** coupled to an acupuncture plate **200**. In an embodiment the plate **200** may be elastically coupled to the handle segment **222** via an elastomeric section **210**. The elastomeric section may be comprised of a combination of elastomeric materials and non-elastomeric materials. The elastomeric materials may include plastics, rubber (synthetic or natural), and spring(s).

FIG. **1**C includes a simplified exploded view of an embodiment of an acupuncture plate **200** according to various embodiments. The plate **200** may include an upper, substantially rigid section or layer **290**, deformable or elastic section **270** or layer, and acupuncture section or layer **250**. The acupuncture section **250** may include a plurality of acupuncture pins or needles **230**. FIG. **1**D is a simplified bottom view of

the plate **200** showing the location or holes **212** for the pins or needles **230**. In an embodiment the plate **200** may have a rectangular cross section having a dimensional about 1 to 4 cm in width and about 1 to 6 cm in length. The plate **200** may any shape including circular, elliptical, polygon, or other shape where the shape may be particular to a dermalogical area to be treated.

In an embodiment the plate may include about 140 pins or needles **230** uniformly separated. Each needle may be about 0.1 to 0.4 mm in diameter and 0.2 mm to 1.4 mm in length including 0.3 mm diameter and 0.8 mm in length in an embodiment. The elastic section or layer **270** may be comprised of a combination of elastomeric materials and non-elastomeric materials. The elastomeric materials may include plastics, rubber (synthetic or natural), and spring(s). The pin section **230** may be coupled directly or indirectly to the upper section **290** via the elastic section **250**, including via glues, screws, welds, or other connection. In an embodiment the pin section **250** may include elastomers to enable at least partial deformation of the pin section **250** about the pins **230**.

In operation a user may employ the apparatus **10** to create a plurality of micro-wounds or holes in dermalogical layers of a mammal's **20** skin or dermis. The micro-wound or hole creation may improve the absorption or application of one or more chemicals applied on or about the micro-wounds or holes.

FIG. **2**A is a simplified diagram of a dermalogical treatment architecture **310** according to various embodiments. Architecture **310** includes an acupuncture apparatus **320** and an electrical signal generation system **300**. The electrical signal generation system **300** may be electrically coupled to the acupuncture apparatus **320** via one or more wires **300**A and to a mammal **20** to be treated via one or more wires **300**B. FIG. **2**B is a simplified cross-sectional diagram of the acupuncture apparatus **320** according to various embodiments. The apparatus **320** may include a handle **330**, elastic section **333**, electrical interface **340**, internal wire(s) **331** and plate **350**. The pins **351** may have a length A (0.3 mm to 2.1 mm in an embodiment) where at least one pin **351** is electrically coupled to the electrical interface **340** via the internal wire **331**. The electrical interface **340** may be removably connected to the system **300** wire **300**A.

The electrical signal generation system **300** may generate a variety of signals (such as shown in FIGS. **5**A to **6**) to vibrate one or more pins **351** electrically coupled to the system **300** via the internal wire **331** and lead **300**A. A pin vibration **351** may increase the micro-wound or cut formed in dermis by the pin **351**. FIG. **2**C is a simplified cross-sectional diagram of an acupuncture apparatus **360** according to various embodiments. The apparatus **360** may include a handle **330**, an elastic section **333**, an electrical conductive interface **390**, internal wire(s) **331**, signal generator **370**, switch **375**, and plate **350**. The signal generator **370** may be coupled to at least one pin **351** via internal wire **331** and coupled to the conductive interface **390**.

The signal generator or module **370** may generate a variety of signals (such as shown in FIGS. **5**A to **6**) to vibrate one or more pins **351** electrically coupled to the system **300** via the internal wire **331** and the conductive interface **390**. In operation a user **20** may touch the conductive interface **390** and place one or more electrically coupled pins **351** in contact with their dermis to form an electrical pathway from the pin **351** to the electrical conductive interface **390**. The signal generator **370** may include a battery to supply energy to generate one or more electrical signals. The switch **375** coupled to the generator **370** may cause the generator to produce one or more electrical signals for a predetermined time interval or until the switch **375** is triggered again. As noted a pin vibration **351** may increase the micro-wound or cut formed in dermis by the pin **351**.

FIG. **2**D is a simplified cross-sectional diagram of an acupuncture apparatus **362** according to various embodiments. The apparatus **362** may include a handle **330**, an elastic section **333**, internal wire(s) **331**, **332**, signal generator **370**, switch **375**, and plate **350**. The signal generator **370** may be coupled to at least one pin **351** via internal wire **331** and coupled to at least one other pin **352** via internal wire **332**. When active the pins **351**, **352** may form at least one dipole pair. The signal generator or module **370** may generate a variety of signals (such as shown in FIGS. **5**A to **6**) to vibrate one or more dipole pair or bipolar pins **351**, **352**.

FIG. **2**F includes a simplified exploded view of an embodiment of an acupuncture plate **350** including at least one electrically coupled pin **351** according to various embodiments. The plate **350** may include an upper, substantially rigid section or layer **357**, deformable or elastic section **355** or layer, and acupuncture section or layer **353**. The acupuncture section **353** may include a plurality of acupuncture pins or needles **351** where at least one pin **351** is electrically coupled to the wire **331**. In a bipolar configuration a second wire **332** may be coupled to at least one other pin **351**. FIG. **2**E is a simplified bottom view of the plate **350** showing the pins or needles **359**, **357** where the pins may be electrically coupled to a first wire **331** and a second wire **332** to form dipole pair (bipolar pins).

In an embodiment the plate **350** may have a rectangular cross section having a dimensional about 1 to 4 cm in width and about 1 to 6 cm in length. The plate **350** may any shape including circular, elliptical, polygon, or other shape where the shape may be particular to a dermalogical area to be treated.

In an embodiment the plate may include about 140 pins or needles **351** uniformly separated. Each needle may be about 0.1 to 0.4 mm in diameter and 0.2 mm to 1.4 mm in length including 0.3 mm diameter and 0.8 mm in length in an embodiment. The elastic section or layer **355** may be comprised of a combination of elastomeric materials and non-elastomeric materials. The elastomeric materials may include plastics, rubber (synthetic or natural), and spring(s). The pin section **353** may be coupled directly or indirectly to the upper section **357** via the elastic section **355**, including via glues, screws, welds, or other connection. In an embodiment the pin section **353** may include elastomers to enable at least partial deformation of the pin section **353** about the pins **351**.

FIGS. **3**A and **3**B are simplified isometric diagrams of acupuncture apparatus **400**, **460** including at least one pin **451** that may be coupled to an electrical signal via an internal wire **458**. Each apparatus **400**, **460** includes curved roller **450** having a plurality of acupuncture pins **451** where the pins **451** may be similar to pins **351**. In apparatus **400**, the electrical lead wire **300**A may be coupled to an electrical interface **410** in the apparatus handle **430** where the interface **410** is electrically coupled to the internal wire **458**. In apparatus **460**, the handle **430** may include a signal generator **470** similar to generator **370**, switch **475**, and conduction surface **490**. Apparatus **460** may operate similar to apparatus **360** in operation other than the rolling capability of the apparatus **460**, **400**. In an embodiment the rollers **450** may have various configurations to conform to a dermal area to be treated.

In any of the above apparatus **10**, **320**, **350**, **360**, **400**, **460**, the plate or roller **200**, **350**, **450** may include a plurality of embedded LEDs **32**A, **32**B, a battery **52**, a controller **54**, and an antenna **56** as shown in FIG. **4**A. In an embodiment the LED **32**A may be configured to emit energy of a first particu-

lar frequency range and the LED **32**B may be configured to emit energy of a second particular frequency range. The surface **22** of a roller **450**, plate **200**, **350**, **450** may also be embedded with a chemical **22**A that may be used to treat dermalogical cells. The chemical **22**A may be reactive to the first and the second frequency ranges. Further dermalogical cells may be reactive to the first and the second frequency ranges. In addition, the combination of the chemical **22**A and the application of the first and the second frequency ranges to the chemical **22**A and dermalogical cells may have a synergetic effect.

In an embodiment the chemical **22**A may be applied directly to the dermalogical cells to be treated. In a further embodiment a chemical **22**A may not be employed in addition to the apparatus **10**, **320**, **350**, **360**, **400**, **460**. In an embodiment the pin section **250**, **353**, may be translucent and comprised of polyurethane, medical silicon, or other pliable, translucent, hypoallergenic material.

In an embodiment the local controller **54** and battery **52** may also be embedded in the upper section **290**, **357**, pin section **230**, **351**, or the handle **220**, **330**, or separately between these sections. The controller **54** may be electrically coupled to the one or more LEDs **32**A, **32**B. The controller **54** may also be coupled to a battery **52**. The controller **54** may generate one or more signals for LEDs **32**A, **32**B as a function of a user switch **75**, **56**. The signals may vary as a function of the first and second frequency ranges. The controller **54** may include one or more timers **58** that may limit the application of energy to the LEDs **32**A, **32**B to predetermined time intervals. In an embodiment the controller may also be coupled to an antenna **104** to receive or transmit one or more signals related to the transmission of energy to one or more LEDs **32**A, **32**B. In an embodiment the system **10** may be configured to treat a particular segment of dermalogical cells such as a face. The apparatus **10** may be configured to conform to a user's anatomy so that emitted light is focused on dermalogical cells. In another embodiment **200**, the system **200** may be configured to treat another anatomical region including dermalogical cells on an arm, leg, chest, hands, feet, neck, or other region.

In an embodiment **510** shown in FIG. **4**B, a controller **54**, an antenna **104**, and a power source **60** may be located external to the apparatus **10**, **320**, **360**. The power source **60** may be coupled to the controller **54**. The controller **54** may be coupled to one or more LEDs **32**A, **32**B via one or more electric wires **106**. The controller **54** may generate one or more signals for LEDs **32**A, **32**B as a function of the user switch **56**. The signals may vary as a function of the first and second frequency ranges. The controller **54** may include one or more timers **58** that may limit the application of energy to the LEDs **32**A, **32**B to predetermined time intervals. In an embodiment the controller may also be coupled to an antenna **104** to receive or transmit one or more signals related to the transmission of energy to one or more LEDs **32**A, **32**B.

As shown in FIG. **4**C, in any of the above apparatus **10**, **320**, **350**, **360**, **400**, **460**, the plate or roller **200**, **350**, **450** may include a plurality of embedded LED lens **536**, a fiber optic pathway **534**, and an LED **532**. In this embodiment, system **530** LED **532** shown in FIG. **4**C may be coupled to lens **536** via the fiber optic pathway **534**. The controller **540** may generate an LED signal via the LED **532** that is transmitted to dermalogical cells via the lens **536** and the fiber optic pathway **534**.

FIGS. **5**A-**5**B are diagrams of electrical signal waveforms **650**, **630**, **640** that may be applied to one or more LEDs **32**A, **32**B, **532** and to the pins **230**, **351**, **451** according to various embodiments. The signal waveform **650** includes several square-wave pulses **652**, **654**, **656** that may be applied to an LED **32**A, **32**B, **532**. Each pulse **652**, **654**, **656** may a have a similar magnitude and envelope. The waveform **650** may be used to energize an LED **32**A, **32**B, **532** and to the pins **230**, **351**, **451** periodically P**1** for a predetermined interval T**1** where each pulse **652**, **654**, **656** has a amplitude A**1**. In an embodiment, A**1** may be about 0.1 milliamperes (mA) to 10 mA, the pulse width T**1** may be about 100 microseconds (μs) to 500 μs and the period P**1** may from 100 ms to 500 ms as a function of the energy required to create capacitance in a liquid. In another embodiment, A**1** may be about 0.5 milliamperes (mA) to 5 mA, the pulse width T**1** may be about 200 microsecond (μs) and the period P**1** may about 250 ms as a function of the energy to drive an LED or cause one or more pins **230**, **351**, **451** to vibrate.

In FIG. **5**B a signal waveform **630** may be applied to a first LED **32**A, **32**B, **532** module or group and to the pins **230**, **351**, **451** and a second waveform **640** may be applied or used to energize a second LED **32**A, **32**B, **532** module and the pins **230**, **351**, **451**, **352**. The signal waveform **630** includes several square-wave pulses **632**, **634**, and **636** and the signal waveform **640** includes several square-wave pulses **642**, **644**, and **646**. Each pulse **632**, **634**, **636**, **642**, **644**, **646** may a have a similar magnitude and envelope. The waveform **630** may be used to energize a first LED **32**A, **32**B, **332** module and the pins **230**, **351**, **451** periodically P**1** for a predetermined interval T**1** where each pulse **632**, **634**, **636** has an amplitude A**1**. The waveform **640** may be used to energize a second LED **32**A, **32**B, **332** module and the pins **230**, **351**, **451** periodically P**2** for a predetermined interval T**2** where each pulse **642**, **644**, **646** has an amplitude B**1**. The pulse width T**1**, T**2** may be about 100 microseconds (μs) to 500 μs and the period P**1**, P**2** may from 100 ms to 500 ms as a function of the energy to affect dermalogical cells or chemicals **22**A. In another embodiment, A**1**, A**2** may be about 0.5 milliamperes (mA) to 5 mA, the pulse width T**1**, T**2** may be about 200 microsecond (μs) and the period P**1**, P**2** may about 250 ms as a function of the energy required to affect dermalogical cells or chemicals **22**A. In an embodiment the pulses **632**, **634**, **636** do not substantially overlap the pulses **642**, **644**, **646**. In an embodiment T**1**>T**2** and P**2** is an integer multiple of P**1**.

FIG. **6** depicts a waveform **670** that includes multiple pulses **672**, **674**, **676**, **678**, **682**, and **684** that may not overlap in the time or the frequency domain. In an embodiment each pulse **672**, **674**, **676**, **678**, **682**, and **684** may have a pulse width T**3**, and frequency spectrum width F**1** and period P**3**. The pulse **672** is frequency offset from the pulse **674**, the pulse **676** is frequency offset from the pulse **678**, and the pulse **682** is frequency offset from the pulse **684**. The pulses **672**, **674**, **676**, **678**, **682**, and **684** may be applied to an LED module to affect dermalogical cells or chemicals **22**A and the pins **230**, **351**, **451**. Pulses **672**, **674** having different frequency spectrums may enable different LED stimulation. In an embodiment the pulses **672**, **676**, **682** may be applied to a first LED module and the pulses **674**, **678**, **684** may be applied to a second LED module. The frequency separation between the respective pulses may enable simultaneous energization of a first and a second LED module and the pins **230**, **351**, **451** and subsequent and independent spectrum generation.

In an embodiment the invention may employ the algorithm **740** shown in FIG. **7**A to apply therapy to dermalogical cells. A user, clinician, or equipment may place an apparatus **10**, **320**, **360**, **360**, **400**, **460** on dermalogical cells to be treated (activity **741**) including pressing the apparatus against the cells firmly enough to embed one or more pins **251**, **351**, **451** in the cells. A first signal such as shown in FIGS. **5**A, **5**B, and **6** may be applied to a first LED module or group (**32**A) and the

pins **230**, **351**, **451** of a dermalogical apparatus **10**, **320**, **360**, **360**, **400**, **460** (activity **742**) for a predetermined time period (activity **744**). A second signal such as shown in FIGS. **5**A, **5**B, and **6** may be applied to a second LED module or group (**32**B) and the pins **230**, **351**, **451** of a dermalogical apparatus **10**, **320**, **360**, **360**, **400**, **460** (activity **746**) for a predetermined time period (activity **748**). The signals applied to the groups may be selected to stimulate dermalogical cells or chemicals **22**A or cause vibration of one or more pins **251**, **351**, **451**.

In another embodiment the invention may employ the algorithm **750** shown in FIG. **7**B to apply therapy to dermalogical cells. A user, clinician, or equipment may apply a light sensitive chemical on an apparatus **10**, **320**, **360**, **360**, **400**, **460** or on dermalogical cells to be treated (activity **751**). The user, clinician, or equipment may place apparatus **10**, **320**, **360**, **360**, **400**, **460** on dermalogical cells to be treated (activity **752**). A signal such as shown in FIGS. **5**A, **5**B, and **6** may be applied to a LED module or group (**32**A or **32**B) and the pins **230**, **351**, **451** (activity **354**) for a predetermined time period (activity **356**).

In another embodiment the invention may employ the algorithm **760** shown in FIG. **7**C to apply therapy to dermalogical cells. A user, clinician, or equipment may apply a light sensitive chemical on an apparatus **10**, **320**, **360**, **360**, **400**, **460** or on dermalogical cells to be treated (activity **761**). The user, clinician, or equipment may place an apparatus **10**, **320**, **360**, **360**, **400**, **460** on dermalogical cells to be treated (activity **762**). A first signal such as shown in FIGS. **5**A, **5**B, and **6** may be applied to a first LED module or group (**32**A) and one or more pins **251**, **351**, **451** of a dermalogical apparatus **10**, **320**, **360**, **360**, **400**, **460** (activity **763**) for a predetermined time period (activity **764**). A second signal such as shown in FIGS. **5**A, **5**B, and **6** may be applied to a second LED module or group (**32**B) and one or more pins **251**, **351**, **451** of a dermalogical apparatus **10**, **320**, **360**, **360**, **400**, **460** (activity **766**) for a predetermined time period (activity **768**).

The apparatus **10**, **320**, **360**, **360**, **400**, **460** may be used to employ cosmetic or medications or other chemicals directly on dermalogical cells such as skin with the addition of light of specific frequencies for treatment and healing of epidermal cells of the skin or tissue below the skin with the object of assisting the agents used in delivery, uptake, action and function more effectively. The LEDs **32**A, **32**B may create the specific frequencies of light. The apparatus **10**, **320**, **360**, **360**, **400**, **460**, light application may enable cosmetic or medication or other active chemicals **22**A on dermalogical cells for longer time periods while preventing dehydration of the applied substances. Such light application may improve the efficacy of cosmetic or medication or other active chemical as a function of the selected wavelengths or frequencies.

Further the dermalogical system application may increase cellular activity and help heal tissue faster and facilitate the delivery, uptake and use in the cell of the cosmetics, medications, or chemicals **22**A used. The LED light of specific frequencies may increase fibroblast production and collagen as well as other activities of the cell including stimulating the organelles and mitochondria to produce ATP for cell energy for functioning, decreasing treatment time and facilitate healing. The apparatus **10**, **320**, **360**, **360**, **400**, **460** make the agents used on the body more efficacious and useful to the body on a cellular level.

The apparatus **10**, **320**, **360**, **360**, **400**, **460** may stimulate the basic energy processes in the mitochondria (energy compartments) of each cell, particularly when near-infrared light is used to activate the color sensitive chemicals (chromophores, cytochrome systems) inside but not limited to these spectrum alone as the UV, other visible and IR spectrums may also be usable. In an embodiment optimal LED wavelengths for skin repair may include 640, 680, 730 nanometers (nm) wavelengths to IR 880 nm. Further application of blue light 400 nm to 490 via the apparatus **10**, **320**, **360**, **360**, **400**, **460** may inhibit the growth and kill bacteria, fungus in and on dermalogical cells. The apparatus **10**, **320**, **360**, **360**, **400**, **460** may be employed to apply cosmetics, medications and/or other actives directly to the skin and maintain their presence long-term while using LED or other actinic light to increase their effect on the cells and tissue in the body. The apparatus **10**, **320**, **360**, **360**, **400**, **460** are also highly portability and enable user mobility during treatment.

Chemicals **22**A may include cosmetics, medications and other actives appropriate for dermalogical cells including AHA's (alpha hydroxy acid), natural oils, aloe vera compounds, collagen boosters, bt, chitosan, daeses, endorphins, photodynamic drugs (PDT) like (Photofrin or ALA), vitamins A, C E or others, kojic acid, retinols or other exfoliant, salicylic acid, anti oxidants or other youth boosters and anti aging cosmetic or medications, antiseptic, antibiotics, anticancer agents, aroma therapy agents, fruit and vegetable extracts, anti-inflammatory agents, pain relievers, hormones, depilatories, and others, but the scope of this invention is not limited to these alone but can include any helpful medication, herbal formula or active compound for the skin and/or other tissues.

FIG. **8** is a block diagram of an article **780** according to various embodiments. The article **780** shown in FIG. **8** may be used in various embodiments as a part of apparatus **10**, **320**, **360**, **360**, **400**, **460** where the article **780** may be any computing device including a personal data assistant, cellular telephone, laptop computer, or desktop computer. The article **780** may include a central processing unit (CPU) **782**, a random access memory (RAM) **784**, a read only memory (ROM") **806**, a display **788**, a user input device **812**, a transceiver application specific integrated circuit (ASIC) **816**, a digital to analog (D/A) and analog to digital (A/D) convertor **815**, a microphone **808**, a speaker **802**, and an antenna **804**. The CPU **782** may include an OS module **814** and an application module **813**. The RAM **784** may include switches **56** and timers **58**.

The ROM **806** is coupled to the CPU **782** and may store the program instructions to be executed by the CPU **782**. The RAM **784** is coupled to the CPU **782** and may store temporary program data, overhead information, and the queues **798**. The user input device **812** may comprise an input device such as a keypad, touch pad screen, track ball or other similar input device that allows the user to navigate through menus in order to operate the article **780**. The display **788** may be an output device such as a CRT, LCD, LED or other lighting apparatus that enables the user to read, view, or hear user detectable signals.

The microphone **808** and speaker **802** may be incorporated into the device **780**. The microphone **808** and speaker **802** may also be separated from the device **780**. Received data may be transmitted to the CPU **782** via a bus **796** where the data may include signals for an LED **32**A, **32**B, **332** or optical module or wires **331**, **458**. The transceiver ASIC **816** may include an instruction set necessary to communicate data, screens, or signals. The ASIC **816** may be coupled to the antenna **804** to communicate wireless messages, pages, and signal information within the signal. When a message is received by the transceiver ASIC **816**, its corresponding data may be transferred to the CPU **782** via the serial bus **796**. The data can include wireless protocol, overhead information, and data to be processed by the device **780** in accordance with the methods described herein.

The D/A and A/D convertor **815** may be coupled to one or more optical modules to generate a signal to be used to energize one of the optical modules. The D/A and A/D convertor **815** may also be coupled to one devices such as LEDs **32**A, **32**B and the pins **251**, **351**, **451**. Any of the components previously described can be implemented in a number of ways, including embodiments in software. Any of the components previously described can be implemented in a number of ways, including embodiments in software. Thus, the LEDs **32**A, **32**B, pins **251**, **351**, **451**, controllers **54**, switch **56**, timers **58**, controller **320** may all be characterized as "modules" herein. The modules may include hardware circuitry, single or multi-processor circuits, memory circuits, software program modules and objects, firmware, and combinations thereof, as desired by the architect of the system **10**, **30**, **50**, **60** and as appropriate for particular implementations of various embodiments.

FIG. **9**A is a simplified block diagram of a dermalogical treatment architecture (DTA) **900** according to various embodiments. As shown in FIG. **9**A, architecture **900** includes a signal generation and control module (SGC) **910**, a handle module **920**, and an actuator module **930**. In an embodiment the handle module **920** may include a deployable needle module **924** and a motor and LED module **922**. In an embodiment the deployable needle module **924** may be releasably coupled to the motor and LED module **922**. In a further embodiment the deployable needle module **924** may be a disposable cartridge module **924** to be removed and disposed after one or more treatments or for each patient, client, or user.

The SGC **910** may include one or more displays **912**A, user input device **912**B, handle module interface **914**A, and actuator module interface **914**C, electrical energy storage module **913**, and one or more wheels **916**A, **916**B. In an embodiment the SGC **910** may be moveable and the wheels **916**A, **916**B may be lockable to prevent unintentional movement of the SGC **910** once positioned where desired by a user. In another embodiment the SGC **910** may also be coupled to the external power source including an alternating current (AC) grid source.

In an embodiment the displays **912**A may indicate operational parameters for a hand module **920** to be coupled or coupled to the SGC **910**. The displays **920** may be touch sensitive so a user may configure one or more operational parameters. In an embodiment the operational parameters may include electrical energy signal intensity to be applied the hand module **920**, timing of such energy application, needle deployment timing and depth(s), LED intensity and timing, and number of cycles or shots to be conducted for each actuation via the actuator **930**. In an embodiment the actuator **930** may be integral to the SGC **910** or a separate device wireless coupled or wired to the SGC **910** via a cable **914**D and the SGC **910** actuator module interface **914**C.

In an embodiment the actuator **930** may a mechanical device including a foot actuator or hand based actuator. The actuator **930** may also be an electronic device having an ASIC or running an application on a device (such as a computer, laptop, PDA, cellphone, or other electronic device) such as the module **780** shown in FIG. **8**. In an embodiment the application may enable a user to set or control any of the possible operational parameters of the SGC **910** and initiate actuation a device **920** coupled to the SGC **910**. FIG. **9**B is a block diagram of a CPU module **911** that may be employed in the SGC **910** according to various embodiments.

The CPU module **911** may include a radio frequency (RF) signal generator (RFSG) module **911**A, a needle deployment motor controller (NDMC) module **911**B, and a photonic signal generator module (PSG) **911**C. In an embodiment the photonic signal generator module **911**C may be an LED signal generator or controller module **911**C. In an embodiment a hand module **920** may include one or more photonic generation devices or modules (**922**I in FIG. **10**A, **10**B) where the PSG **911**C may generate control or energy signals that cause the photonic modules **922**I to generate photons of one or more frequencies with a desired intensity.

The NDMC **911**B may control the deployment of one or more needles **924**A of a deployable needle module **924** (FIG. **9**C) based on one or more user selected operational parameters. The parameters may determine the depth and duty cycle related to the needle(s) **924**A deployment in an embodiment. The signals generated by the NDMC **911**B to control needle deployment may vary as a function of motor(s) (**922**A, FIG. **9**C) employed to drive one or more needles **924**A. As described above an electrical signal may also be applied to the needle(s) **924**A to cause vibration of the needles or enable cutting, blending, and coagulation of the tissue in which the needles **924**A are deployed. The RFSG **911**A may generate one or more electrical signals to be applied to one or more needles **924**A based on the selected operational parameters. An electrical signal may be applied to a single needle **924**A, group of needles **924**A (mono-polar configuration) or pair(s) of needles **924**A (bipolar configuration) in an embodiment. In an embodiment the RFSG **911**A may apply signals **650**, **630**, **640**, **670** shown in FIGS. **5**A, **5**B, and **6**, a combination thereof, or other signals.

In an embodiment the CPU module **911** via the RFSG **911**A, NDMC **911**B, and PSG **911** C may create various therapy solutions including various combinations of photonic, electrical, and mechanical (needle deployment) therapy. In a further embodiment the CPU module **911** may control the generation of photonic energy to particular modules **922**I, individual or group of needle(s) **924**A deployment via one or more motors **922**A, and control electrical signal(s) applied to individual or group of needles **924**A. Accordingly the DTA **900** may apply various therapies based on user selections via the displays **912**A, user selection device **912**B, and actuator **930**. The CPU **911** may employ the algorithm **930** (FIG. **12**) or variations thereof to control the operation of the DTA **900**.

FIG. **9**C is a simplified cross-sectional diagram of a cartridge based dermalogical treatment apparatus or hand module **920** with one or more needles **924**A refracted according to various embodiments. FIG. **9**D is a simplified cross-sectional diagram of a cartridge based dermalogical treatment apparatus or hand module **920** with one or more needles **924**A deployed according to various embodiments. The handle module **920** may include a deployable needle module (DNM) **924** and a motor and LED module (MLM) **922**. In an embodiment the DLM **924** may be a releasably couplable cartridge module. In a further embodiment the DLM **924** may be a detachable cartridge module (DCM) **924** where the DCM may be changed between therapy application(s) or client(s). In a further embodiment, the DCM **924** may be disposed after usage or cleaned via an autoclave or chemical process.

As shown in FIGS. **9**C and **9**D, the MLM **922** may include one or more motors **922**A, longitudinally extendable drive arms **922**B, drive shaft **922**C, outer casing **922**D, signal interface **922**E, photonic generator module **922**H, and DCM **924** interface **925** (shown in FIGS. **10**A to **10**F). The motor(s) **922**A and photonic generator module **922**H may be electrically coupled to the signal interface **922**E to received control signals and energy to operate one or more motors **922**A and photonic devices or modules **922**I of the photonic generator module **922**H. The drive arm(s) **922**B may be coupled to one or more drive shafts **922**C so the drive shafts may be moved

longitudinally to deploy and retract one or more needles **924**A when the MLM **922** is operatively coupled to the DNM **924**.

As shown in FIGS. **9**C and **9**D the deployable needle module **924** may include at least one deployable needle **924**A, MLM connecting arm and drive coupling tabs **924**B, and MLM connecting/locking arms **924**C. The MLM connecting/locking arms **924**C may be configured to engage and lock to DCM **924** interface **925** recesses **925**D (FIG. **10**F). The MLM connecting arm and drive coupling tabs **924**B may be configured to disengage connecting/locking arms **924**C from the MLM interface **925** when the tabs **924**B are depressed inward in an embodiment (as shown in FIG. **10**B). The tabs **924**B may further displace drive shaft connecting arms **924**D (FIG. **10**A) inward or centrally when the tabs **924**B are depressed inwardly (as also shown in FIG. **10**B). When the connecting/locking arms **924**C are depressed inwardly or centrally (FIG. **9**C and **9**D) from an outward position (FIG. **10**B). The arms **924**C may engage the interface **925** recesses **925**D to securely hold the DNM **924** to the MLM **922**. The arms **924**C may also displace the tabs **924**B outwardly and cause the drive shaft connecting arms **924**D to return outwardly.

The drive shaft connecting arms **924**D may securely engage the drive shaft **922**C tip **922**F (FIG. **10**E) recess **922**G (FIG. **10**E) when they return to an outward position as shown in FIGS. **10**D and **10**E. In this configuration the DNM **924** is securely coupled to the MLM **922** via the arms **924**C and **924**D. In this configuration the motor(s) **922**A via drive shaft (s) **922**C coupled to the motor **922**A shaft **922**B may reliably drive one or more needles **924**A of the DNM **924** (from a retracted or deployed position such as shown in FIGS. **9**C and **9**D, respectively). Further the motor(s) **922**A may include steps or infinite drive extension **922**B control to enable precise needle deployment depth or extension beyond the DNM **924** shell (**924**E, FIG. **10**A).

FIG. **10**A-**10**D are simplified, partial, cross-sectional diagrams of the DNM **924** in various stages of attachment to the MLM **922** via the arms **924**C and **924**D according to various embodiments. As shown in FIG. **10**A the DNM or DCM **924** is decoupled from the MLM **922**. The MLM **922** includes the photonic generator module (PGM) **922**H, interface **925**, and drive shaft tip **922**F in a distal portion. As shown in FIG. **10**A the PGM **922**H may include one or more photon modules **922**I. The photon modules **922**I may be LED modules and emit photon with various frequencies and intensities based on the PSG **911**C control signal.

As shown in FIG. **10**A the DNM or DCM **924** may include the connecting arms **924**C, deflecting tabs **924**B, drive shaft coupling arms **924**D, outer shell **924**E, and one or more needles **924**A. In an embodiment the drive shaft coupling arms **924**D may include tabs that may securely engage the drive shaft tip **922**F recess **922**G. The drive shaft coupling arms **924**D may be returnably deflectable inwardly (as shown in FIG. **10**B) via inward depression of the tabs **924**B. Such inward depression of the tabs **924**B may deflect the coupling arms **924**C outward. Similarly, inward depression of the coupling arms **924**C to engage the interface **925** recesses **925**D securely may deflect the tab arms **924**B outwardly (relative the central axis of the DNM **920**). Such outward movement may enable the drive shaft coupling arms **924**D to return to a non-deflected state as shown in FIG. **10**A.

In an embodiment a DNM or DCM **924** may be securely coupled to a MLM **922** by first completely compressing the arms or tabs **924**B as shown in FIG. **10**B. As noted above such inward compression may cause the coupling arms **924**C to deflect outwardly and the drive shaft coupling arms **924**D to be deflected inwardly towards each other. The drive shaft coupling arms **924**D may be compressed so they may fit within the drive shaft **922**C tip **922**F recess **922**G as the DNM or DCM **924** is advanced toward the MLM **922** distal end to securely couple the DNM **924** to the MLM **922** (as shown in FIG. **10**D). After the DNM or DCM **924** is placed over the MLM **922** distal end so the drive shaft coupling arms **924**D are located within the drive shaft **922**C tip **922**F recess **922**G and the coupling arms **924**C are adjacent the MLM **922** interface **925** recesses **925**D as shown in FIG. **10**C.

To complete the coupling of a DNM **924** to the MLM **922**, the coupling arms **924**C may compressed inwardly as shown in FIG. **10**D. The compression of the coupling arms **924**C may deflect the tabs or arms **924**B outwardly. Such outward deflection of the arms **924**B may enable the drive shaft coupling arms **924**D to return to a non-deflected state and securely engage the MLM **922** drive shaft **922**C tip **922**F recess **922**G (as shown in FIG. **10**D). In an embodiment a single coupling arm **924**C, drive shaft coupling arm **924**D, and tab **924**B may be employed in an DNM **924**. After the secure coupling of the DNM **924** to the MLM **922**, the MLM **922** via the motor(s) **922**A may controllably deploy one or more needles **924**A as shown in FIG. **10**E. FIG. **10**F is a simplified cross-sectional diagram of a DNM interface **925** according to various embodiments.

As noted the interface **925** may include one or more recesses **925**D to be securely engaged to DNM **924** coupling arms **924**C. The interface **925** may also include several fenestrations or openings **925**A, **925**B, **925**C (FIG. **10**F). The central fenestration **925**A may be sized to enable passage of the MLM **922** drive shaft **922**C tip **922**F. The fenestrations **925**C may be sized and located above one or more photon modules **922**I to enable photons generated by the photon modules **922**I to pass into the DNM **924**. In an embodiment the DNM **924** outer casing **924**E may be translucent and act as a waveguide to communicate photons to the needle area of the DNM **924**. The fenestrations **925**B may be sized and configured to enable electrical coupling pins **924**G (FIG. **11**A) passage from the DNM **924** to electrical couplings of the MLM **922**. The pins **924**G may communicate electrical signals from the RFSG **911**A to one or more needles **924**A via the wires **914**B and MLM **922**.

FIG. **11**A is a simplified, partial, cross-sectional diagram of DNM **924** coupled to a MLM **922** with needles **924**A deployed according to various embodiments. As shown in FIG. **11**A, the DNM **924** may further include electrical coupling pins **924**G set with a spring loaded base **924**H (in an embodiment). As noted the pins **924**G may extend to electrical contacts in the MLM **922** via the interface **925** fenestrations **925**B. Although a pair of pins **924**G is shown, one or more pins **924**G may be employed in a DNM **924** according to various embodiments. A drive shaft coupling arm **924**D may include an offset **9241** where the offset may be configured to engage a tab or arm **924**B.

As shown in FIG. **11**A when the needle array or assemble **924**F is deployed depression of the tabs **924**B inwardly will not engage the drive shaft coupling arms **924**D (via the offsets **924**I). Such a configuration may prevent unintentional decoupling of the DNM **924** to the MLM **922** when the needle assembly **924**F is at least partially deployed. As shown in FIG. **11**A, the electrical contact pin **924**G is sized to fit within the spring loaded based **924**H. In an embodiment the internal spring **924**M (FIG. **11**C) may force extension of the pin **924**G to maintain electrical conduction with the MLM **922** as the needle assembly **924**F is moved (recessed and deployed to various depths). FIG. **11**B is a simplified, cross-sectional diagram of a DNM **924** needle assembly **924**F according to various embodiments. FIG. **11**C is a simplified, cross-sectional, exploded diagram of the DNM **924** needle assembly

924F according to various embodiments. As shown in FIGS. 11B and 11C, the needle assembly 924F may include a pin cover 924J, drive arm module 924L, needles 924A, pins 924G with bases 924H, and needle printed circuit board (PCB) 924K.

In an embodiment the PCB 924K may couple one or more needles 924A to a first pin 924G base 924H and another one or more needles 924A to another pin 924G based 924H. The first pin 924G and second pin 924H may couple alternating rows or columns of needles 924A to form one or more dipoles between such needles 924A. The drive shaft coupling arms 924D may have a base 924L where the cover 924J includes fenestrations for the needles 924A, a recess for the PCB 924K, and an outer recess for the coupling arm base 924L (as shown assembled in FIG. 11B).

FIG. 12 is a flow diagram illustrating a DTA 900 processing algorithms 930 according to various embodiments. As noted the DTA 900 SGC 911 RFSG 911A, NDMC 911B, and PSG 911C may enable a user or clinician to select a variety of operational parameters to deliver a desired combination of electrical, light (photonic), and mechanical (needle) therapy to dermalogical tissue. In the algorithm 930, a user may select different operational modes including cut (activities 932A to 932F), blend (activities 934A to 934F), and coagulation (activities 936A to 936F) in an embodiment. In a cut operational mode, a user may select the electrical signal intensity (activity 932B) and application time (activity 932C). The CPU 911 may determine the total energy that will be applied for each activation based on the selected intensity and time (total fluence—activity 932D). Then, upon activation (activity 932E, 932F) the DTA 900 may energize the MLM 922 based on the operational parameters.

In a blend operational mode (activity 934A), a user may select the electrical signal intensity, start delay, and duty cycle (activity 934B) and needle deployment depth and number of shots per activation (activity 934C). The duty cycle may include the delay before energy and needle deployment, the time the energy and needles are deployed, and the subsequent off or rest time before the next possible duty cycle. As noted above the motor(s) 922A may enable precise needle extension (effective depth) control. In an embodiment the motor(s) 922A may include a transverse motor that converts rotational force to longitudinal force. The motor may be a Haydon model number: 21H4AB-05-049 having a motor speed of about 0.005 mm/msec and motor power of about 1000 Hz approximately 40N (Newton) (described in detail at www.haydonkerk.com and whose specifications are incorporated by reference).

The CPU 911 may determine the total energy that will be applied for each activation based on the selected intensity and duty cycle (total fluence—activity 934D). Then, upon activation (activity 934E, 934F) the DTA 900 may energize the MLM 922 based on the operational parameters and deploy the needle assembly 924F to a desired extension beyond the DNM 924 shell 924E to enable a desired depth of needle 924A penetration within tissue when the shell 924E is placed adjacent the tissue.

In a coagulation operational mode (activity 936A), a user may select the electrical signal intensity and start delay (activity 936B) and needle deployment depth and number of shots per activation (activity 936C). As noted above the motor(s) 922A may enable precise needle extension (effective depth) control. The CPU 911 may determine the total energy that will be applied for each activation based on the selected intensity (total fluence—activity 936D). Then, upon activation (activity 936E, 936F) the DTA 900 may energize the MLM 922 based on the operational parameters and deploy the needle assembly 924F to a desired extension beyond the DNM 924 shell 924E to enable a desired depth of needle 924A penetration within tissue when the shell 924E is placed adjacent the tissue.

Applications that may include the novel apparatus and systems of various embodiments include electronic circuitry used in high-speed computers, communication and signal processing circuitry, modems, single or multi-processor modules, single or multiple embedded processors, data switches, and application-specific modules, including multilayer, multi-chip modules. Such apparatus and systems may further be included as sub-components within a variety of electronic systems, such as televisions, cellular telephones, personal computers (e.g., laptop computers, desktop computers, handheld computers, tablet computers, etc.), workstations, radios, video players, audio players (e.g., mp3 players), vehicles, medical devices (e.g., heart monitor, blood pressure monitor, etc.) and others. Some embodiments may include a number of methods.

It may be possible to execute the activities described herein in an order other than the order described. Various activities described with respect to the methods identified herein can be executed in repetitive, serial, or parallel fashion.

A software program may be launched from a computer-readable medium in a computer-based system to execute functions defined in the software program. Various programming languages may be employed to create software programs designed to implement and perform the methods disclosed herein. The programs may be structured in an object-orientated format using an object-oriented language such as Java or C++. Alternatively, the programs may be structured in a procedure-orientated format using a procedural language, such as assembly or C. The software components may communicate using a number of mechanisms well known to those skilled in the art, such as application program interfaces or inter-process communication techniques, including remote procedure calls. The teachings of various embodiments are not limited to any particular programming language or environment.

The accompanying drawings that form a part hereof show, by way of illustration and not of limitation, specific embodiments in which the subject matter may be practiced. The embodiments illustrated are described in sufficient detail to enable those skilled in the art to practice the teachings disclosed herein. Other embodiments may be utilized and derived therefrom, such that structural and logical substitutions and changes may be made without departing from the scope of this disclosure. This Detailed Description, therefore, is not to be taken in a limiting sense, and the scope of various embodiments is defined only by the appended claims, along with the full range of equivalents to which such claims are entitled.

Such embodiments of the inventive subject matter may be referred to herein individually or collectively by the term "invention" merely for convenience and without intending to voluntarily limit the scope of this application to any single invention or inventive concept, if more than one is in fact disclosed. Thus, although specific embodiments have been illustrated and described herein, any arrangement calculated to achieve the same purpose may be substituted for the specific embodiments shown. This disclosure is intended to cover any and all adaptations or variations of various embodiments. Combinations of the above embodiments, and other embodiments not specifically described herein, will be apparent to those of skill in the art upon reviewing the above description.

The Abstract of the Disclosure is provided to comply with 37 C.F.R. §1.72(b), requiring an abstract that will allow the reader to quickly ascertain the nature of the technical disclosure. It is submitted with the understanding that it will not be used to interpret or limit the scope or meaning of the claims. In the foregoing Detailed Description, various features are grouped together in a single embodiment for the purpose of streamlining the disclosure. This method of disclosure is not to be interpreted to require more features than are expressly recited in each claim. Rather, inventive subject matter may be found in less than all features of a single disclosed embodiment. Thus the following claims are hereby incorporated into the Detailed Description, with each claim standing on its own as a separate embodiment.

What is claimed is:

1. A method of treating dermatological tissue, comprising:

placing a user holdable device releasably couplable deployable needle assembly end surface on or near dermatological tissue to be treated, the holdable device including a proximal end and the releasably couplable deployable needle assembly, the deployable needle assembly mechanically separatably from the proximal end and including a plurality of needles extendable from the deployable needle assembly end surface, one of the proximal end and the deployable needle assembly including at least one electrical conductor and the other including at least one restorably deflectable electrical contact couplable to the one of the proximal end and the deployable needle assembly at least one electrical conductor;

communicating electrical signals from the proximal end to the plurality of the extendable needles;

energizing a motor coupled to a plurality of extendable needles to cause a plurality of the extendable needles to extend a desired distance from the needle assembly end surface; and

energizing the plurality of extended needles via a signal generator electrically coupled to the plurality of extended needles.

2. The method of claim **1**, further comprising placing a dermatological chemical one of on at least a portion of the dermatological tissue, at least a portion of the end surface, and the plurality of the extendable needles.

3. The method of claim **1**, wherein the proximal end includes the needle deploying motor, the motor including a draft shaft releasably couplable to the deployable needle assembly.

4. The method of claim **1**, wherein the proximal end further includes at least one embedded LED therein and further including energizing the LED when the signal generator is energized, the at least one embedded LED illuminating the deployable needle assembly when energized.

5. The method of claim **4**, wherein the releasably couplable deployable needle assembly includes a translucent section to communicate illumination from the least one embedded LED to the plurality of extendable needles.

6. The method of claim **1**, wherein the at least one restorably deflectable electrical contact includes a depressible pin.

7. The method of claim **1**, wherein a first deflectable electrical contact is coupled to a first plurality of the plurality of extendable needles and a second deflectable electrical contact is coupled to a second, different plurality of the plurality of extendable needles.

8. The method of claim **1**, further comprising employing the signal generator to energize the plurality of extended needles with energy to one of cut, blend, or coagulate dermatological tissue.

9. The method of claim **1**, further comprising deploying the plurality of extendable needles to a predetermined depth and employing the signal generator to energize the plurality of extended needles to a predetermined intensity for a predetermined duty cycle.

10. The method of claim **1**, further comprising employing the signal generator to energize a first plurality of the extended needles to cause vibration of a second plurality of extended needles, the first plurality being greater than or equal to the second plurality.

11. An apparatus for treating dermatological tissue, comprising:

a user holdable device including a proximal end and a releasably couplable deployable needle assembly, the deployable needle assembly mechanically separatably from the proximal end and including a plurality of extendable needles, a plurality of the extendable needles extendable from a deployable needle assembly end surface, one of the proximal end and the deployable needle assembly including at least one electrical conductor and the other including at least one restorably deflectable electrical contact couplable to the one of the proximal end and the deployable needle assembly at least one electrical conductor;

a motor coupled to a plurality of extendable needles that causes the plurality of extendable needles to extend a desired distance from the needle assembly end surface when the motor is energized with a particular signal; and

a signal generator electrically coupled to the plurality of extended needles to energize the plurality of extended needles.

12. The apparatus of claim **11**, wherein the device proximal end includes an electrical connector couplable to the signal generator.

13. The apparatus of claim **11**, wherein the proximal end includes the needle deploying motor, the motor including a draft shaft releasably couplable to the deployable needle assembly.

14. The apparatus of claim **11**, wherein the proximal end further includes at least one embedded LED therein and the apparatus further including a photonic signal generator electrically coupled to the least one embedded LED, the at least one embedded LED illuminating the deployable needle assembly when energized.

15. The apparatus of claim **14**, wherein the releasably couplable deployable needle assembly includes a translucent section that communicates illumination from the least one embedded LED to the plurality of extendable needles.

16. The apparatus of claim **11**, the wherein at least one restorably deflectable electrical contact includes a depressible pin.

17. The apparatus of claim **11**, wherein a first deflectable electrical contact is coupled to a first plurality of the plurality of extendable needles and a second deflectable electrical contact is coupled to a second, different plurality of the plurality of extendable needles.

18. The apparatus of claim **11**, wherein the signal generator energizes the plurality of extended needles with energy to one of cut, blend, or coagulate dermatological tissue.

19. The apparatus of claim **11**, further comprising the motor deploying the plurality of extendable needles to a predetermined depth and the signal generator energizing the plurality of extended needles to a predetermined intensity for a predetermined duty cycle.

20. The apparatus of claim **11**, further comprising the signal generator energizing a first plurality of extended needles

to cause vibration of a second plurality of extended needles, the first plurality being greater than or equal to the second plurality.

* * * * *

UNITED STATES PATENT AND TRADEMARK OFFICE

CERTIFICATE OF CORRECTION

PATENT NO. : 9,320,536 B2
APPLICATION NO. : 13/825083
DATED : April 26, 2016
INVENTOR(S) : Jongju Na

It is certified that error appears in the above-identified patent and that said Letters Patent is hereby corrected as shown below:

On the Title Page

Item (63) Related U.S. Application Data, should be listed:
--Continuation of Application No. 13/060,274, filed as application No. PCT/US2008/074131 on Aug. 22, 2008, now Pat. No. 8,979,972--.

Item (60) should be listed:
--Provisional Application No. 61/449,080, filed on Mar. 3, 2011--.

Item (30) Foreign Application Priority Data, should be listed:
--Aug. 8, 2008 (KR) 10-2008-0076993--.

Signed and Sealed this
Ninth Day of March, 2021

Drew Hirshfeld
Performing the Functions and Duties of the
Under Secretary of Commerce for Intellectual Property and
Director of the United States Patent and Trademark Office