US 20090093749A1

(19) United States

(12) Patent Application Publication

SHALEV et al.

(10) Pub. No.: US 2009/0093749 A1

(43) Pub. Date: Apr. 9, 2009

(54) **APPARATUS AND METHOD FOR SKIN TREATMENT**

(76) Inventors: **Pinchas SHALEV**, Herzliya (IL); **Zion AZAR**, Shoham (IL)

Correspondence Address:
DANIEL J SWIRSKY
55 REUVEN ST.
BEIT SHEMESH 99544 (IL)

(21) Appl. No.: **12/324,877**

(22) Filed: **Nov. 27, 2008**

Related U.S. Application Data

(62) Division of application No. 11/955,416, filed on Dec. 13, 2007.

(60) Provisional application No. 60/869,767, filed on Dec. 13, 2006.

Publication Classification

(51) **Int. Cl.**
A61N 1/18 (2006.01)
A61N 1/00 (2006.01)

(52) **U.S. Cl.** **604/20**; 607/115

(57) **ABSTRACT**

A device for treatment of skin tissue includes RF electrodes for applying RF energy to the skin and a dispensing unit for dispensing a depilatory substance onto the skin. The device may include a housing, an RF electrode assembly including RF electrodes for applying RF energy to the skin, one or more of the RF electrodes is movable relative to the housing and to the surface of the skin for distributing the RF energy to various parts of the skin and for spreading the depilatory substance along the surface of the skin. The RF electrodes are energized by an internal or external RF energy source. A method for treatment of skin tissue includes applying a depilatory substance to the skin and applying RF energy to the depilatory substance treated skin.

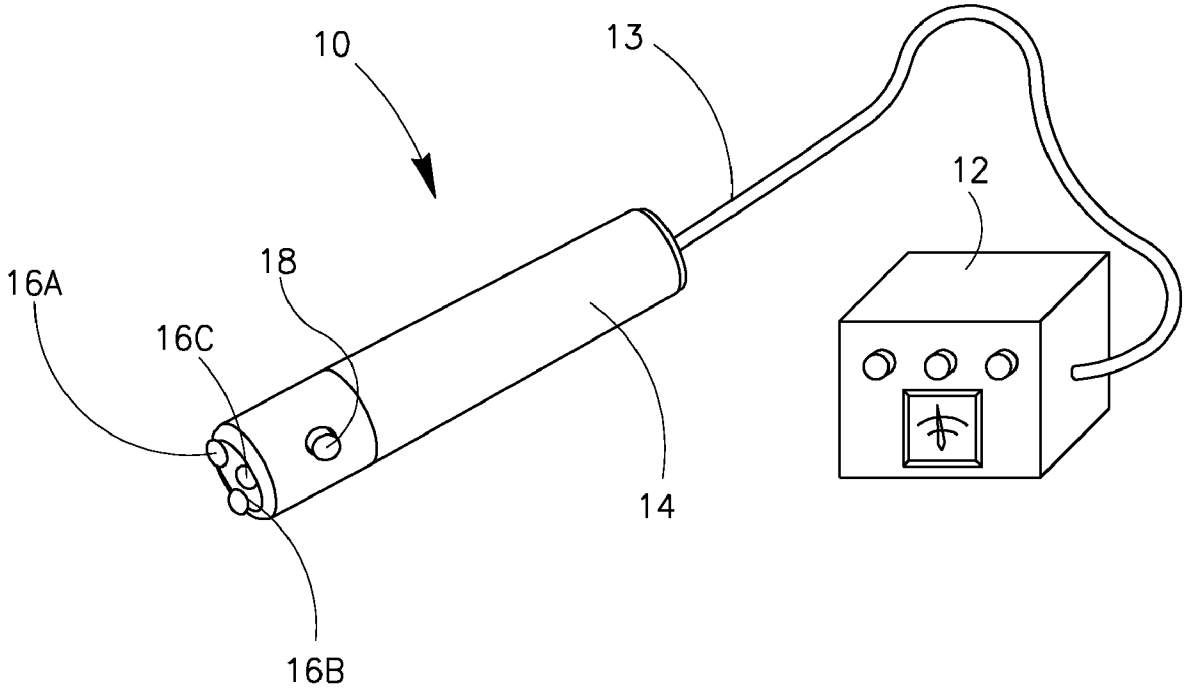

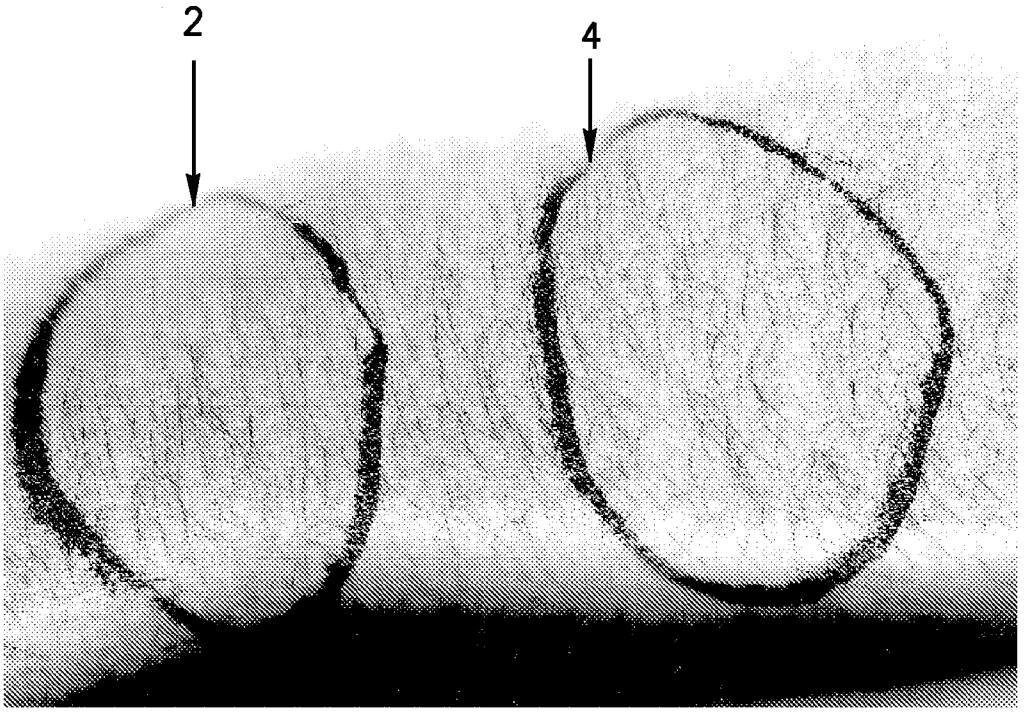

FIG.1

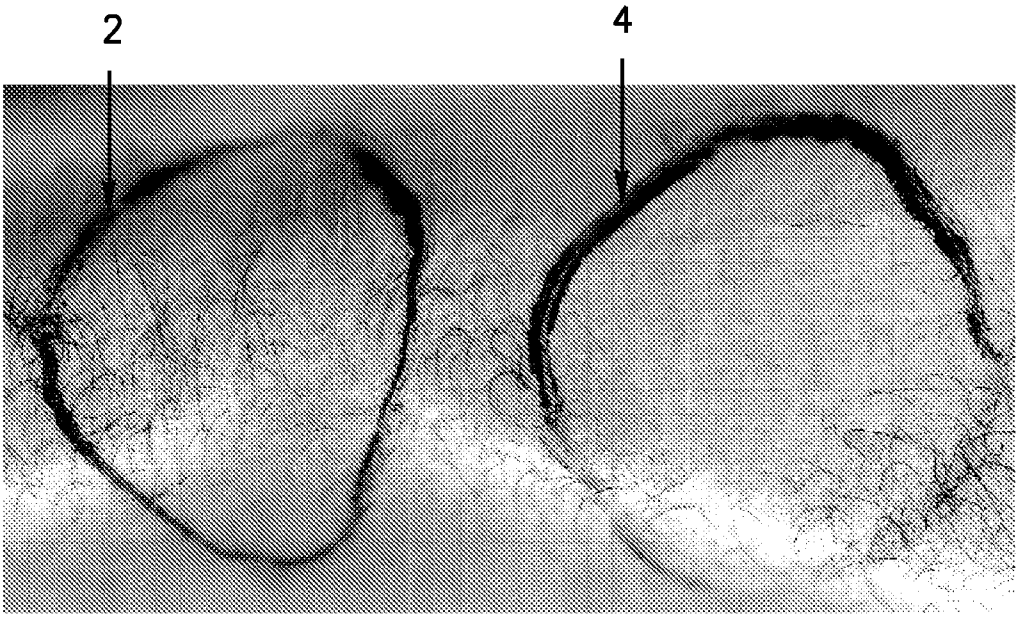

FIG.2

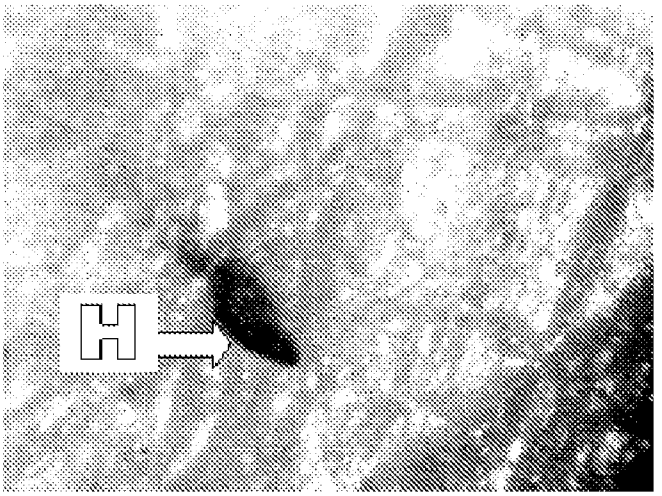

FIG.3

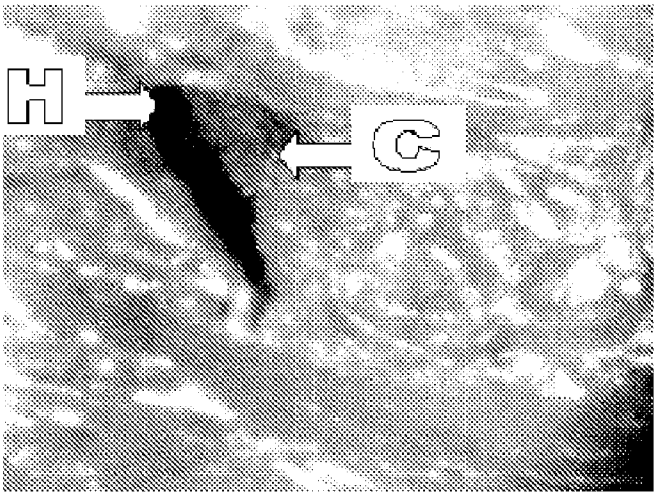

FIG.4

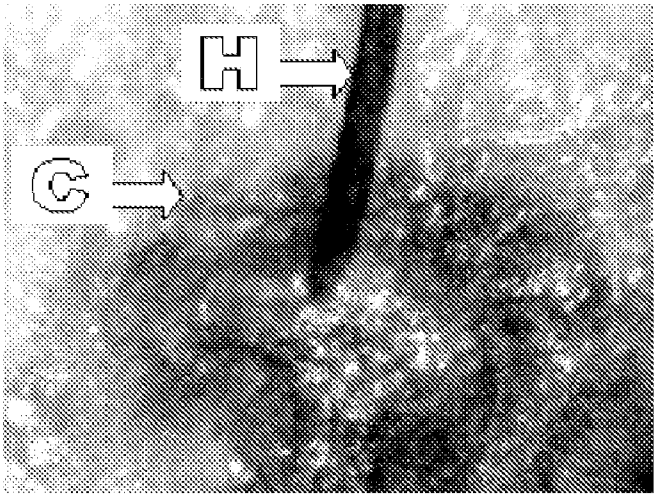

FIG.5

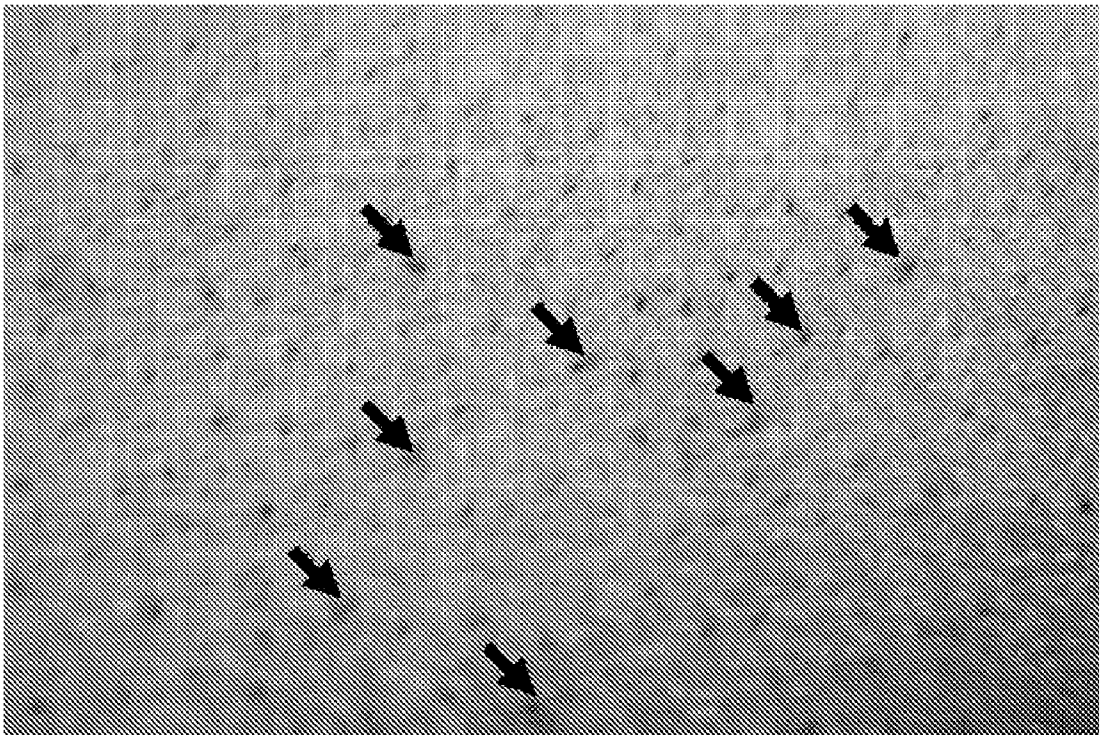

FIG. 6

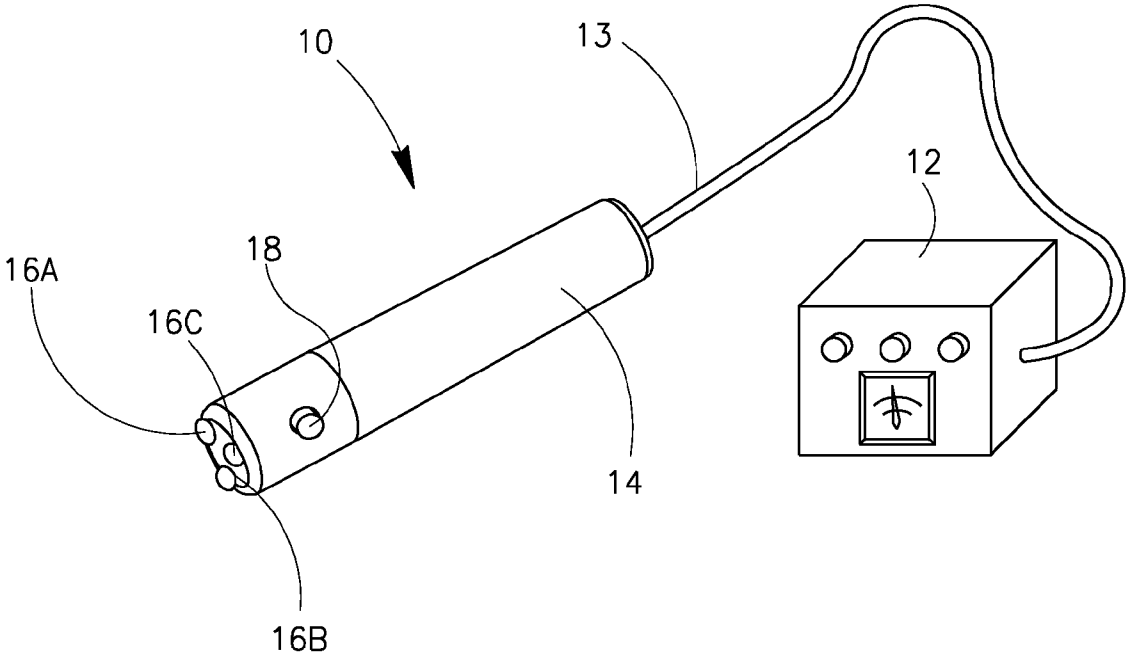

FIG. 7

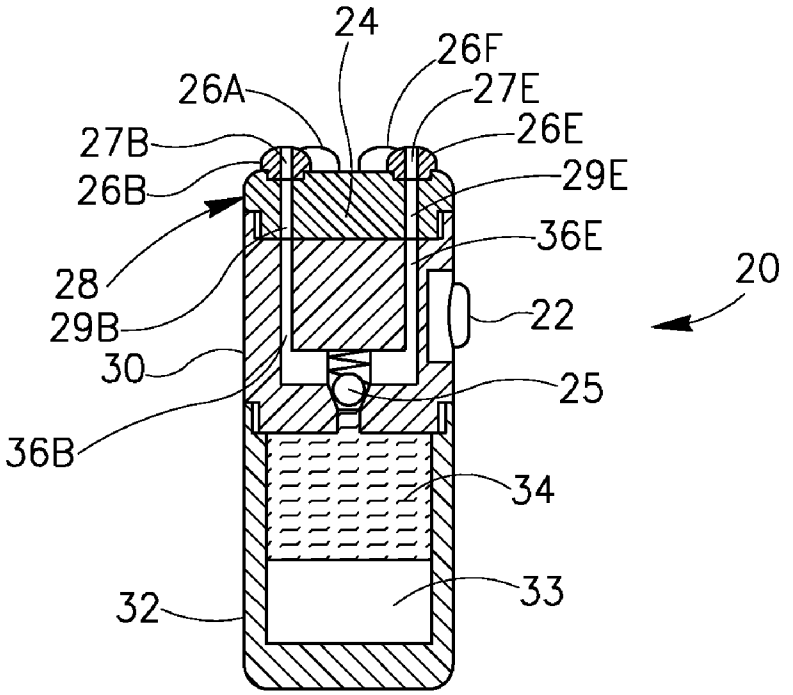
24
26F
26A
27E
27B
26E
26B
29E
36E
28
20
29B
22
30
25
36B
34
32
33

FIG. 8

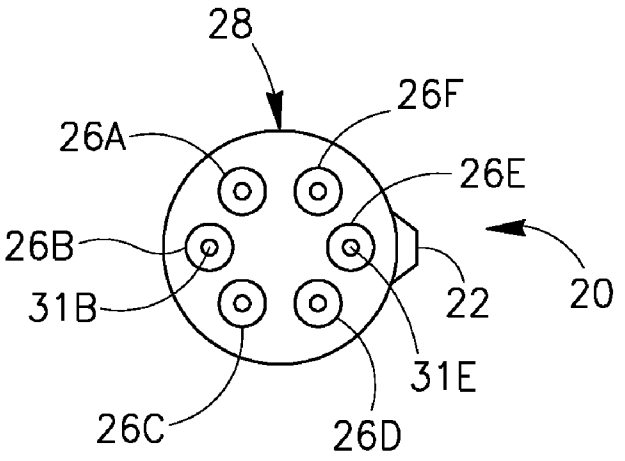
28
26F
26A
26E
26B
22
20
31B
31E
26C
26D

FIG. 9

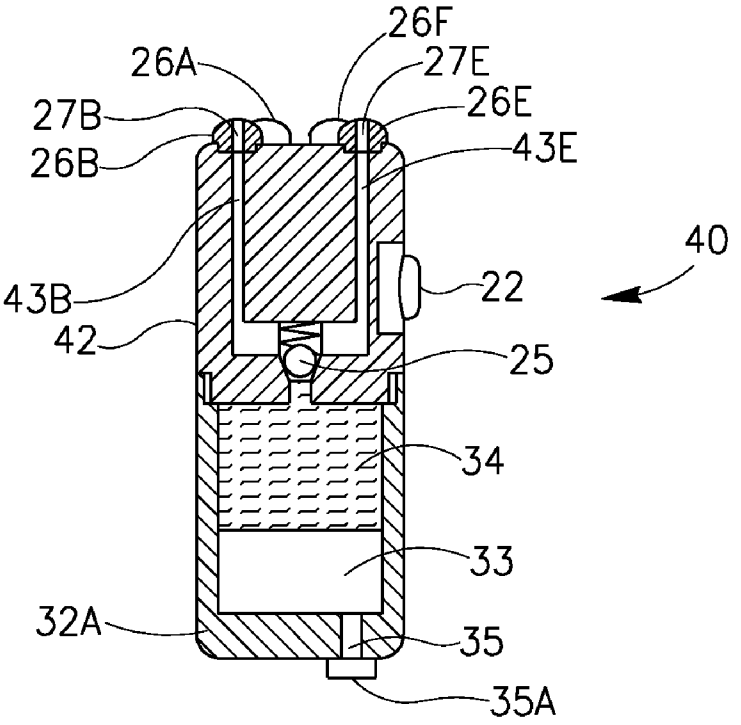
26F
26A
27E
27B
26E
26B
43E
40
43B
22
42
25
34
33
32A
35
35A

FIG.10

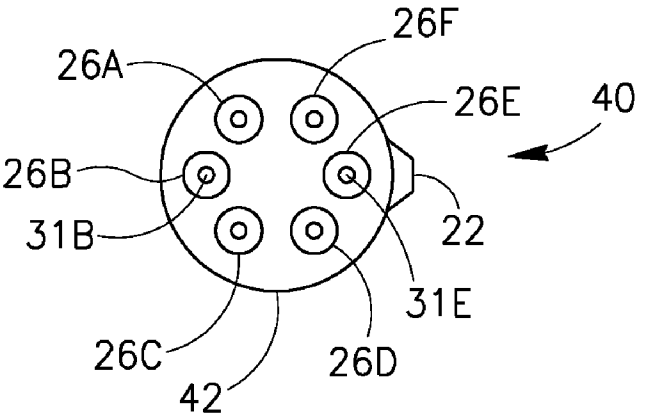
26F
26A
26E
40
26B
22
31B
31E
26C
26D
42

FIG.11

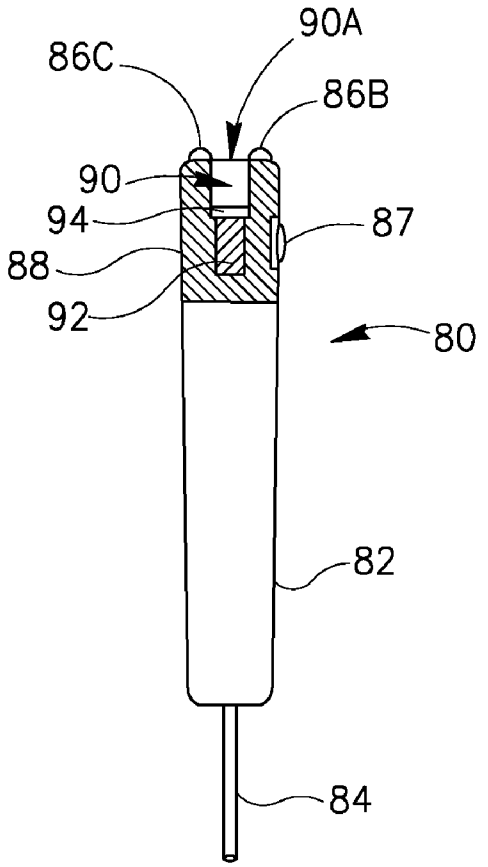

FIG.12

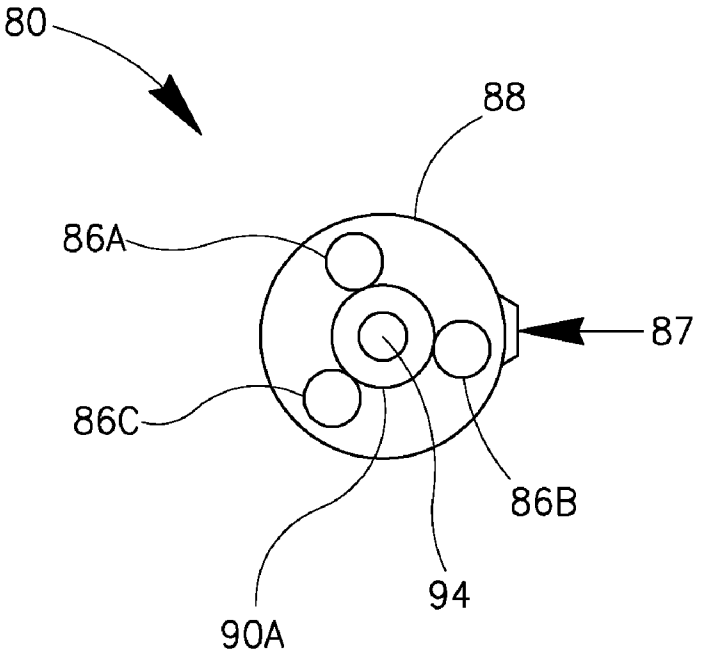

FIG.13

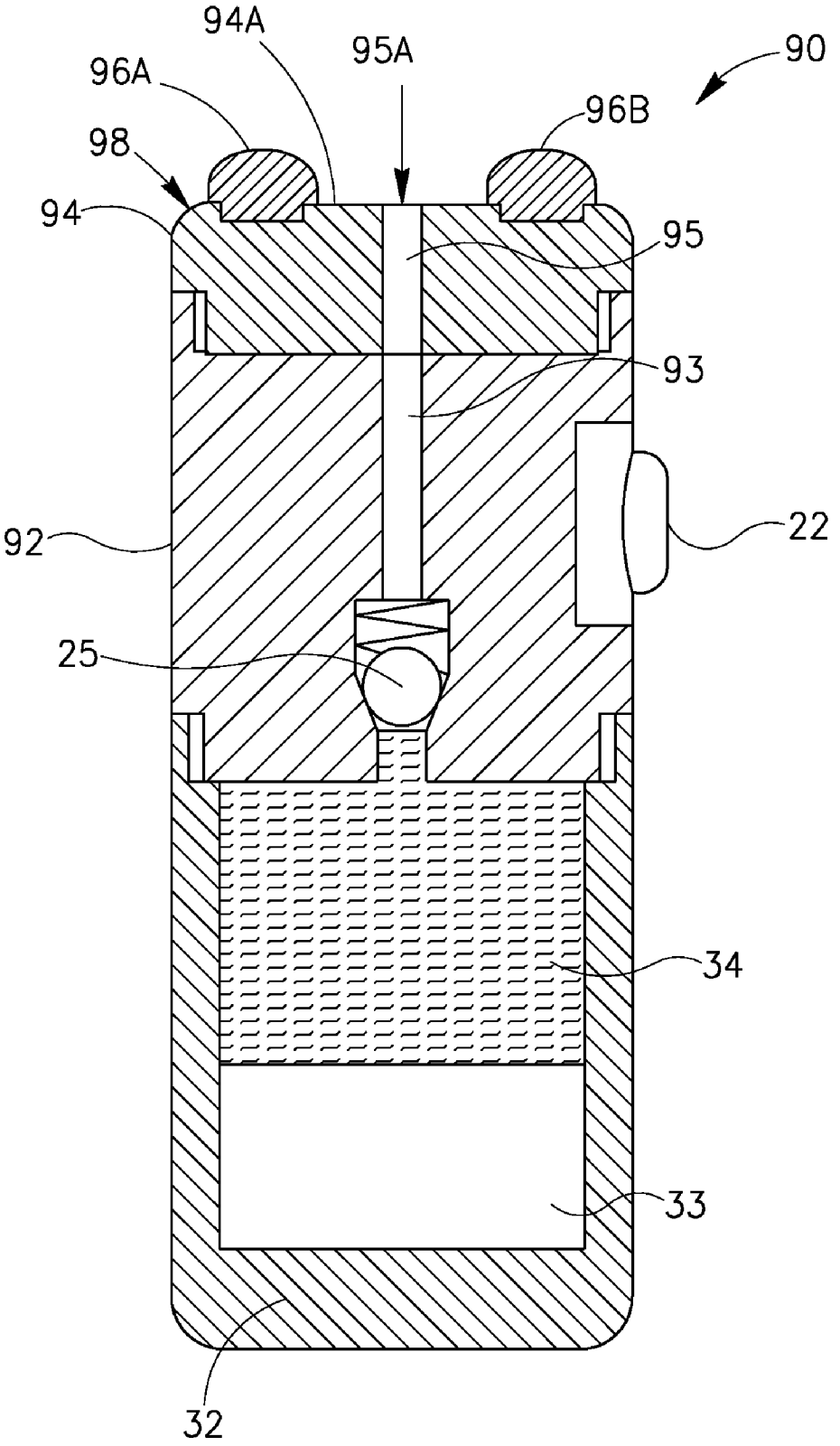

FIG.14

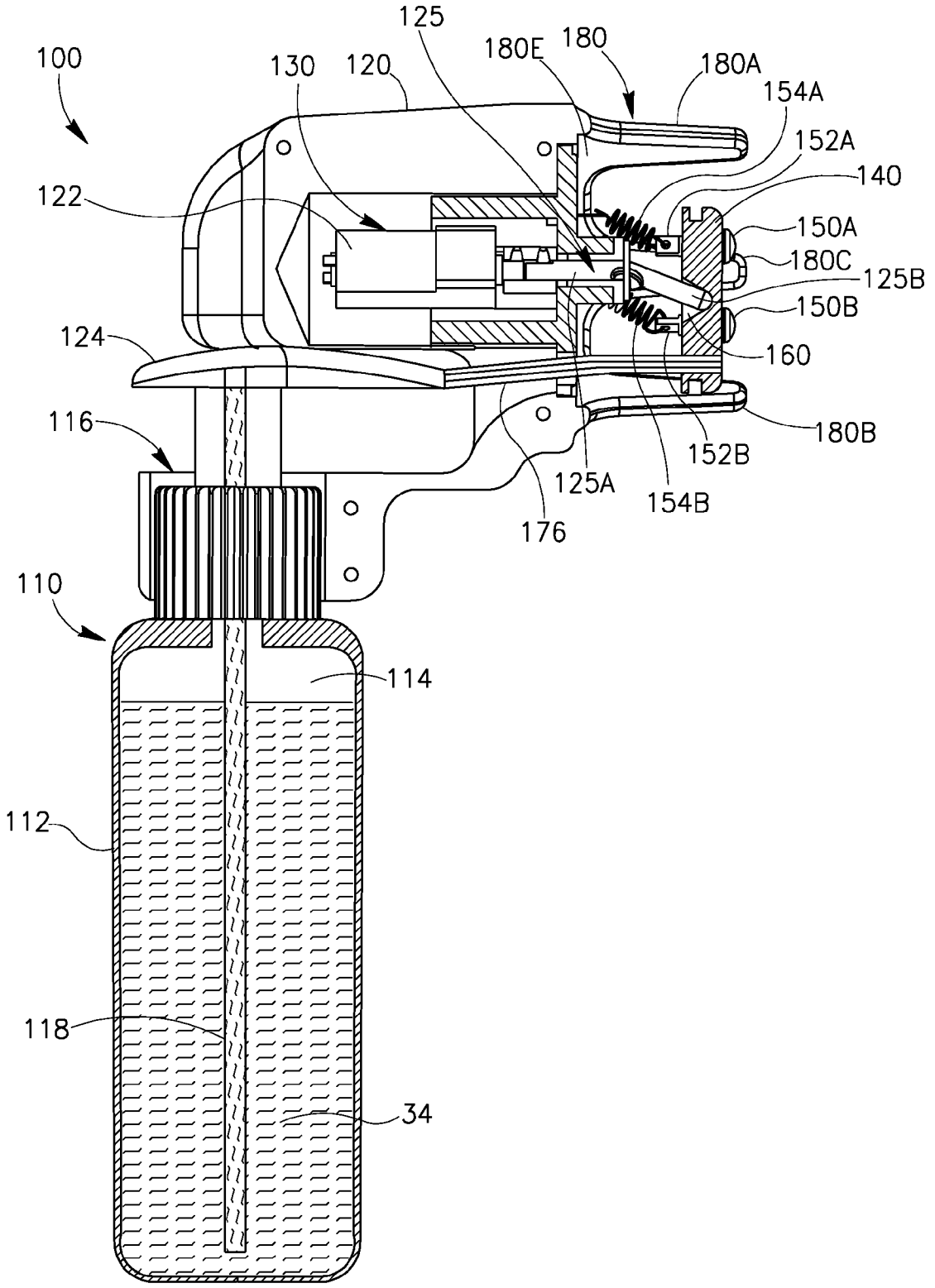
100
125
180E
180
180A
130
120
154A
152A
140
122
150A
180C
125B
150B
124
160
116
180B
152B
125A
154B
176
110
114
112
118
34

FIG.15

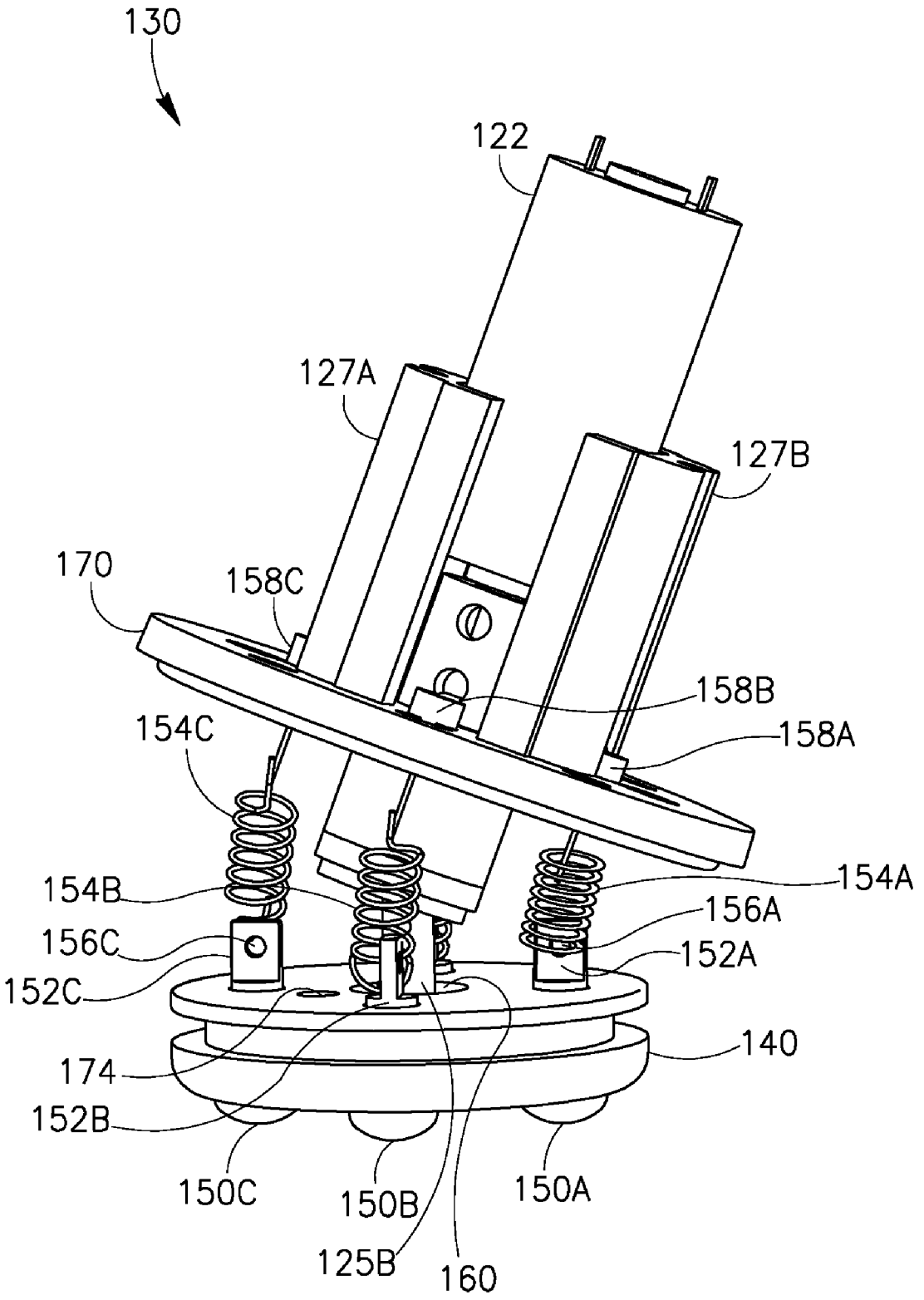
130
122
127A
127B
170
158C
158B
158A
154C
154B
154A
156C
156A
152C
152A
174
140
152B
150C
150B
150A
125B
160

FIG.16

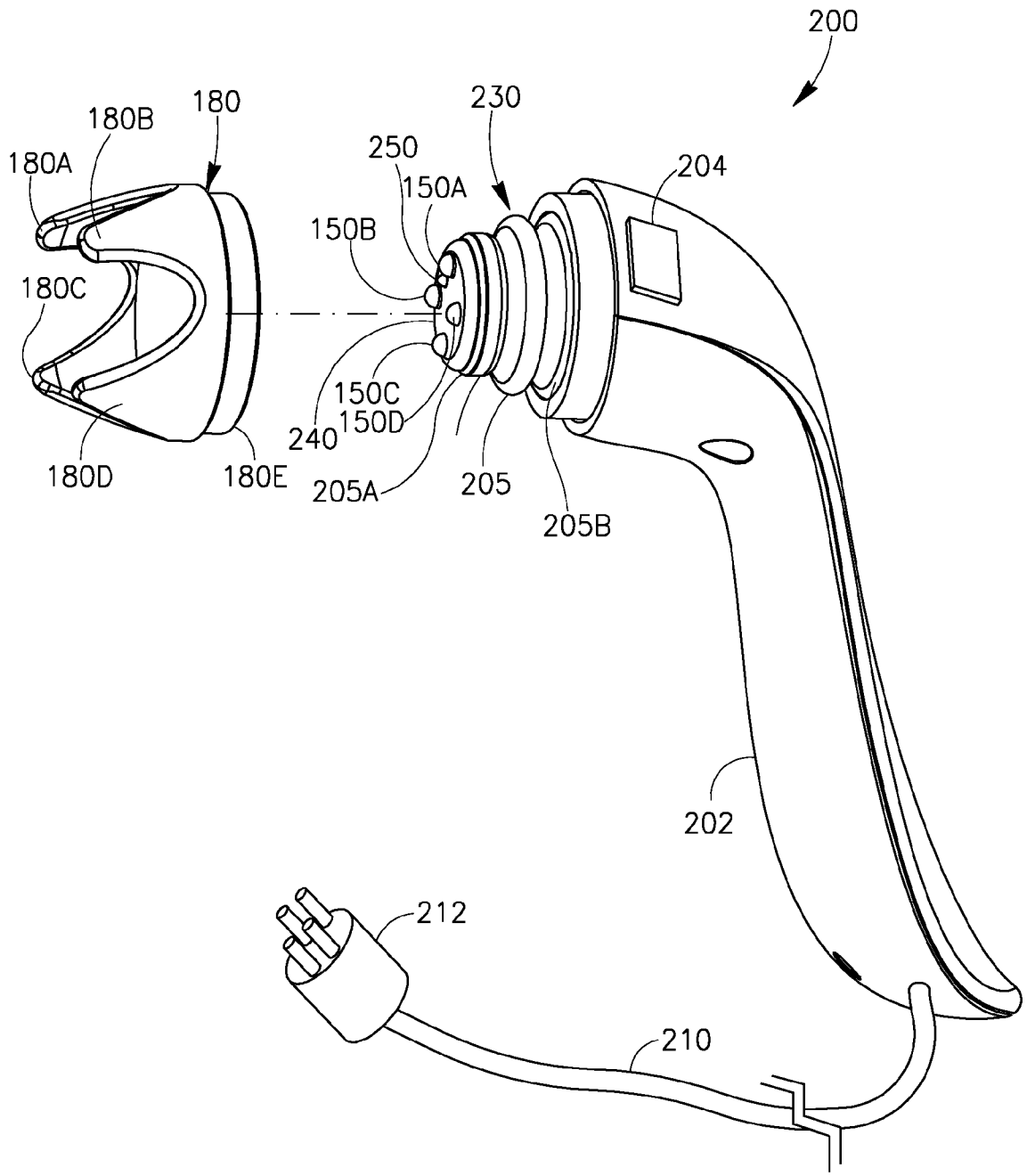
200
180
180B
180A
180C
180D
180E
230
250
150A
150B
204
150C
150D
240
205A
205
205B
202
212
210

FIG.17

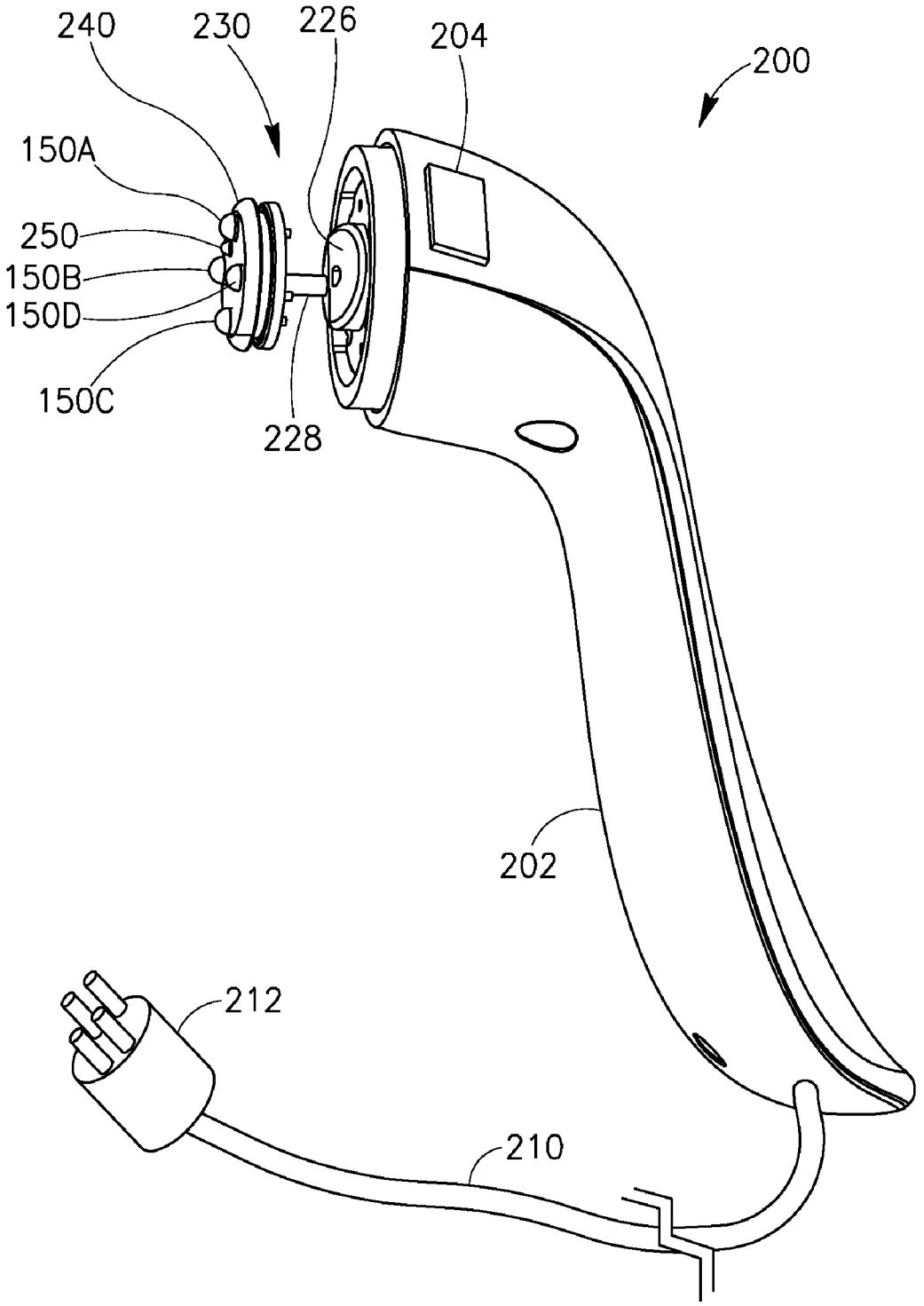

FIG.18

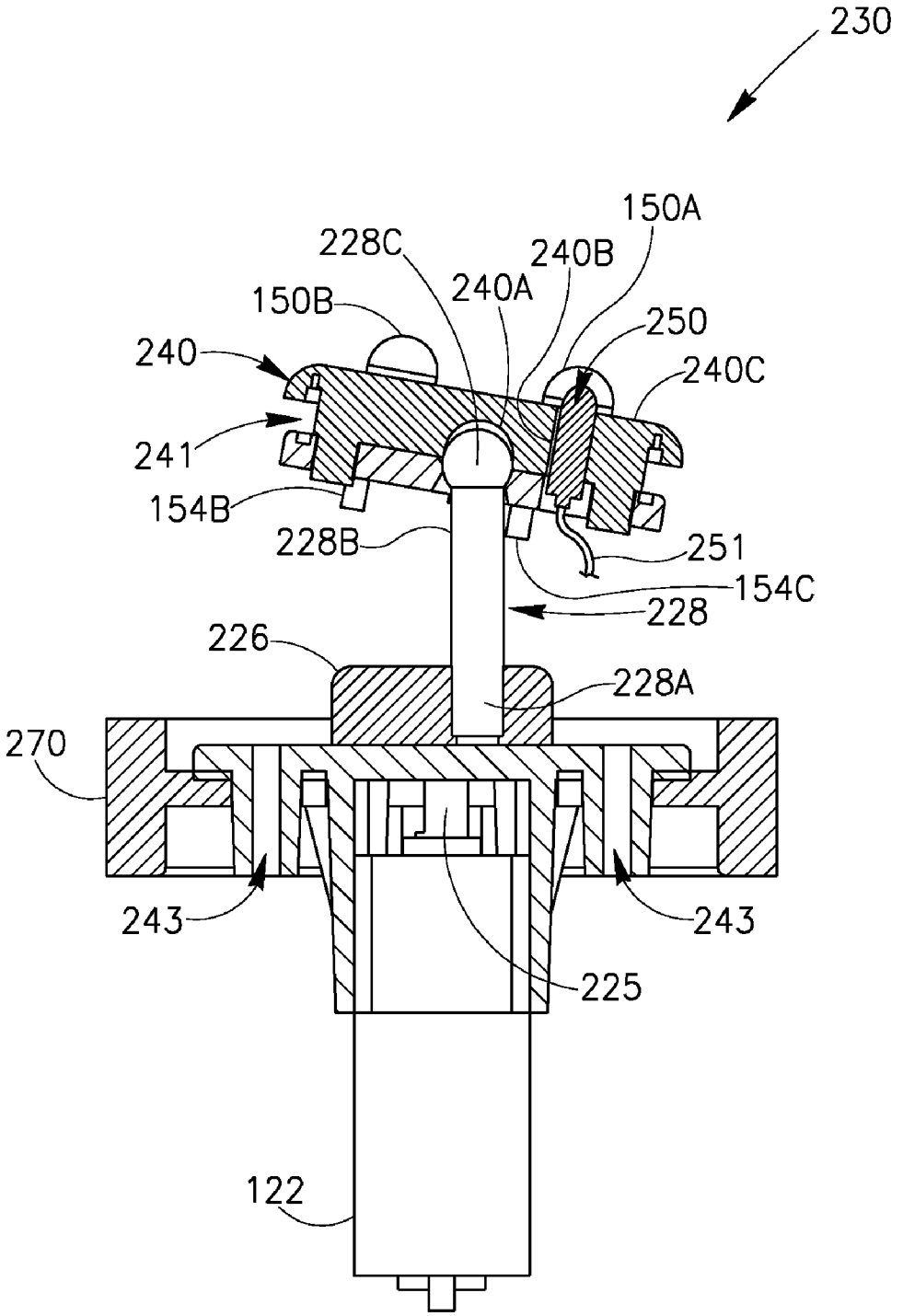
230
150A
228C
240B
240A
150B
250
240
240C
241
154B
228B
251
154C
228
226
228A
270
243
243
225
122

FIG.19

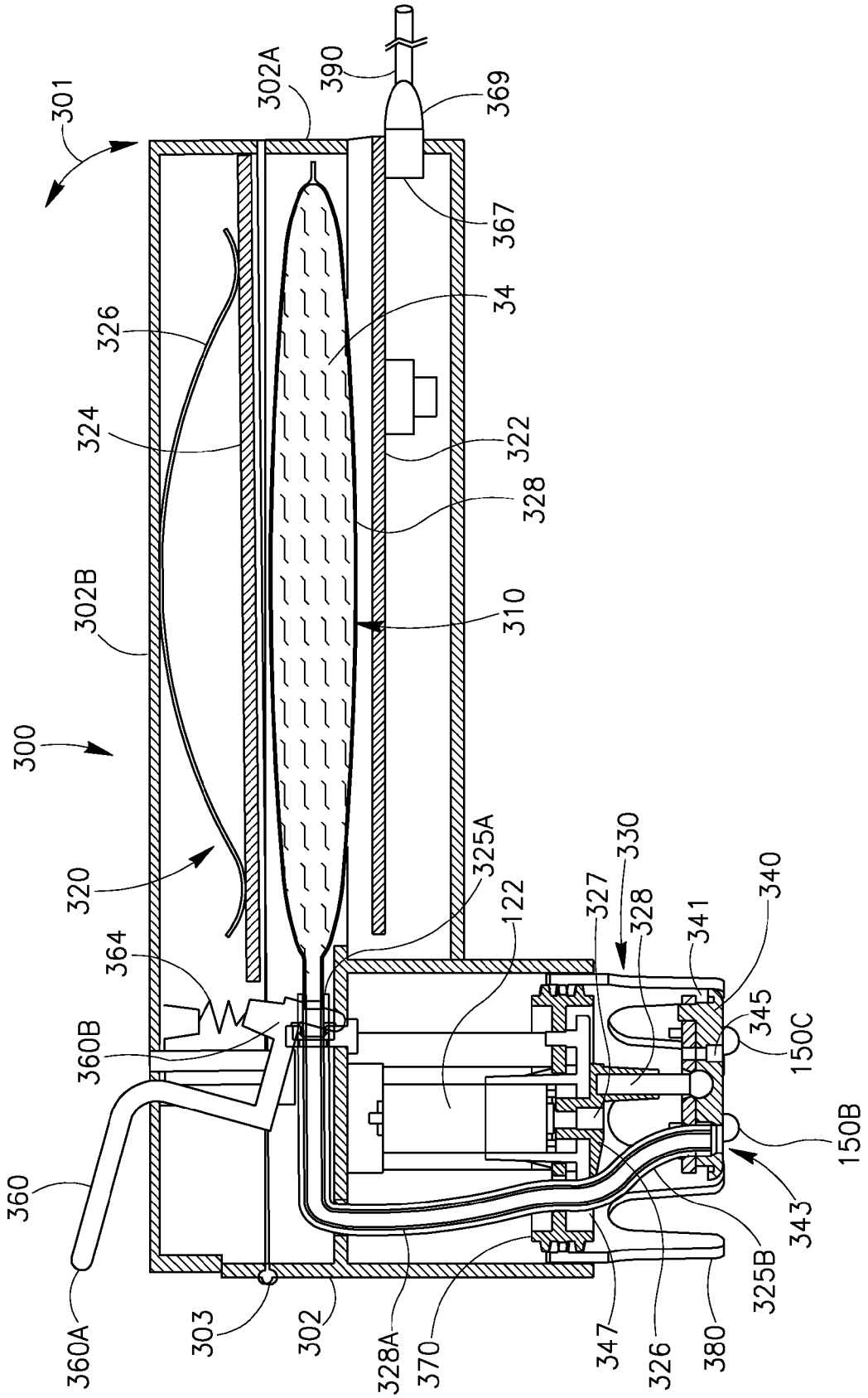
301
302A
390
369
367
34
326
324
322
328
302B
310
300
320
325A
122
330
327
328
341
340
364
345
150C
360B
150B
360
343
325B
360A
303
302
328A
370
347
326
380

FIG.20

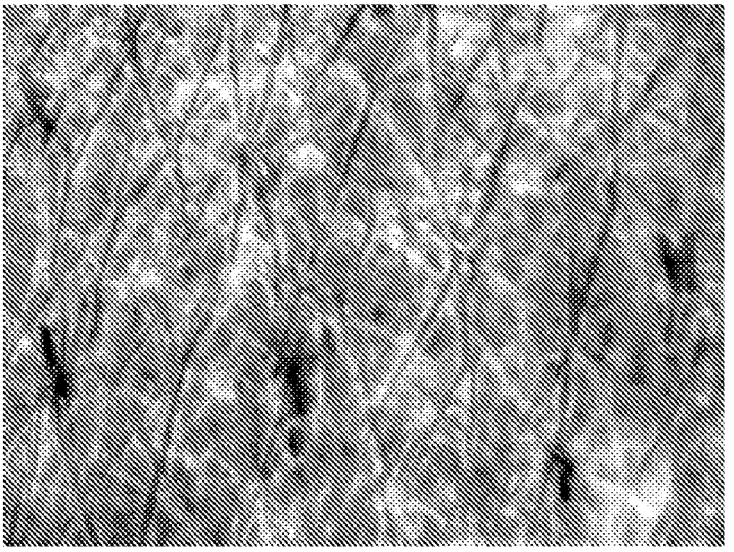

FIG.21

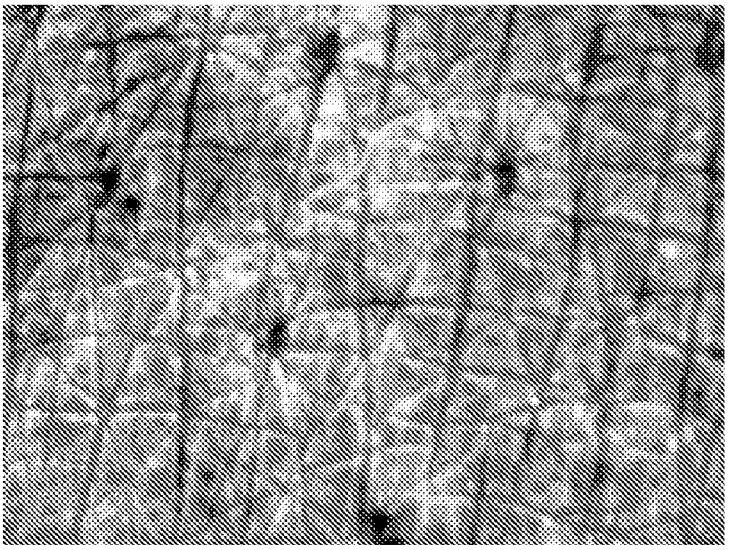

FIG.22

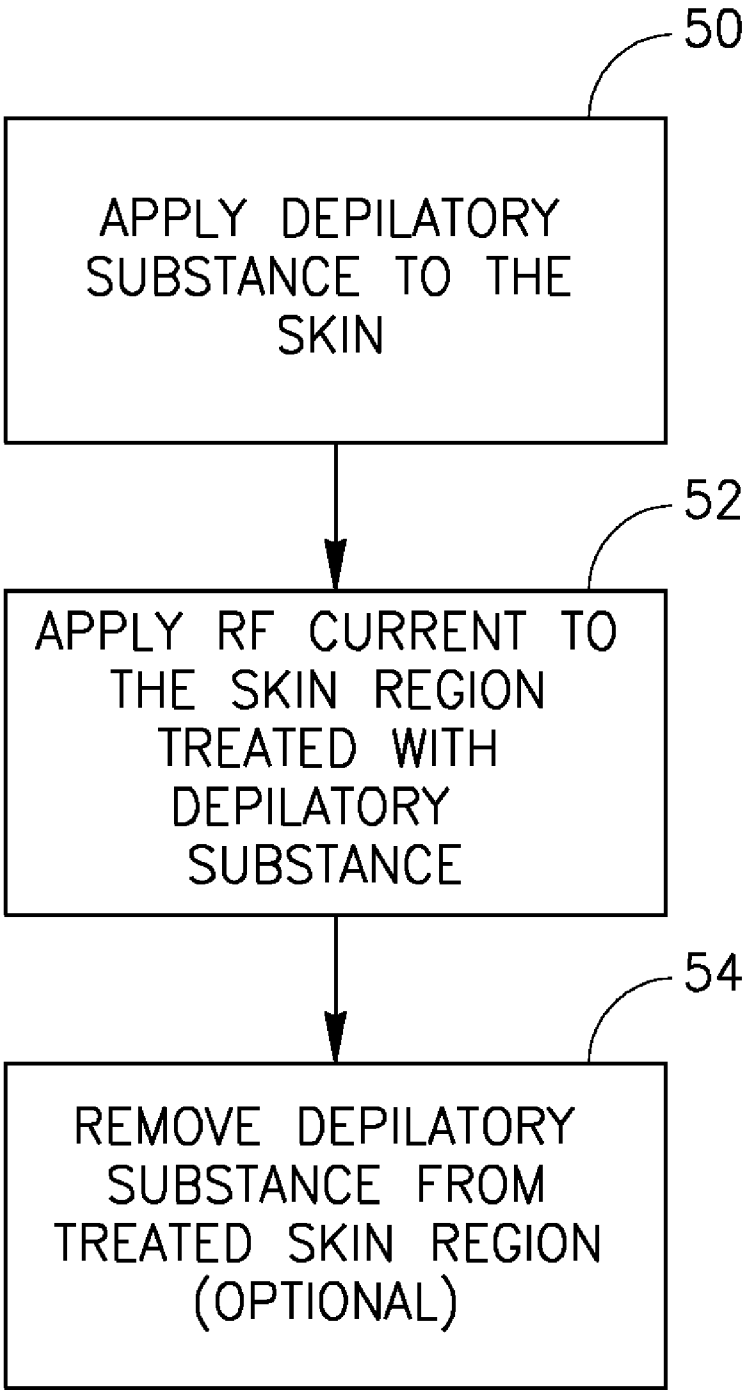
50
APPLY DEPILATORY SUBSTANCE TO THE SKIN
52
APPLY RF CURRENT TO THE SKIN REGION TREATED WITH DEPILATORY SUBSTANCE
54
REMOVE DEPILATORY SUBSTANCE FROM TREATED SKIN REGION (OPTIONAL)

FIG.23

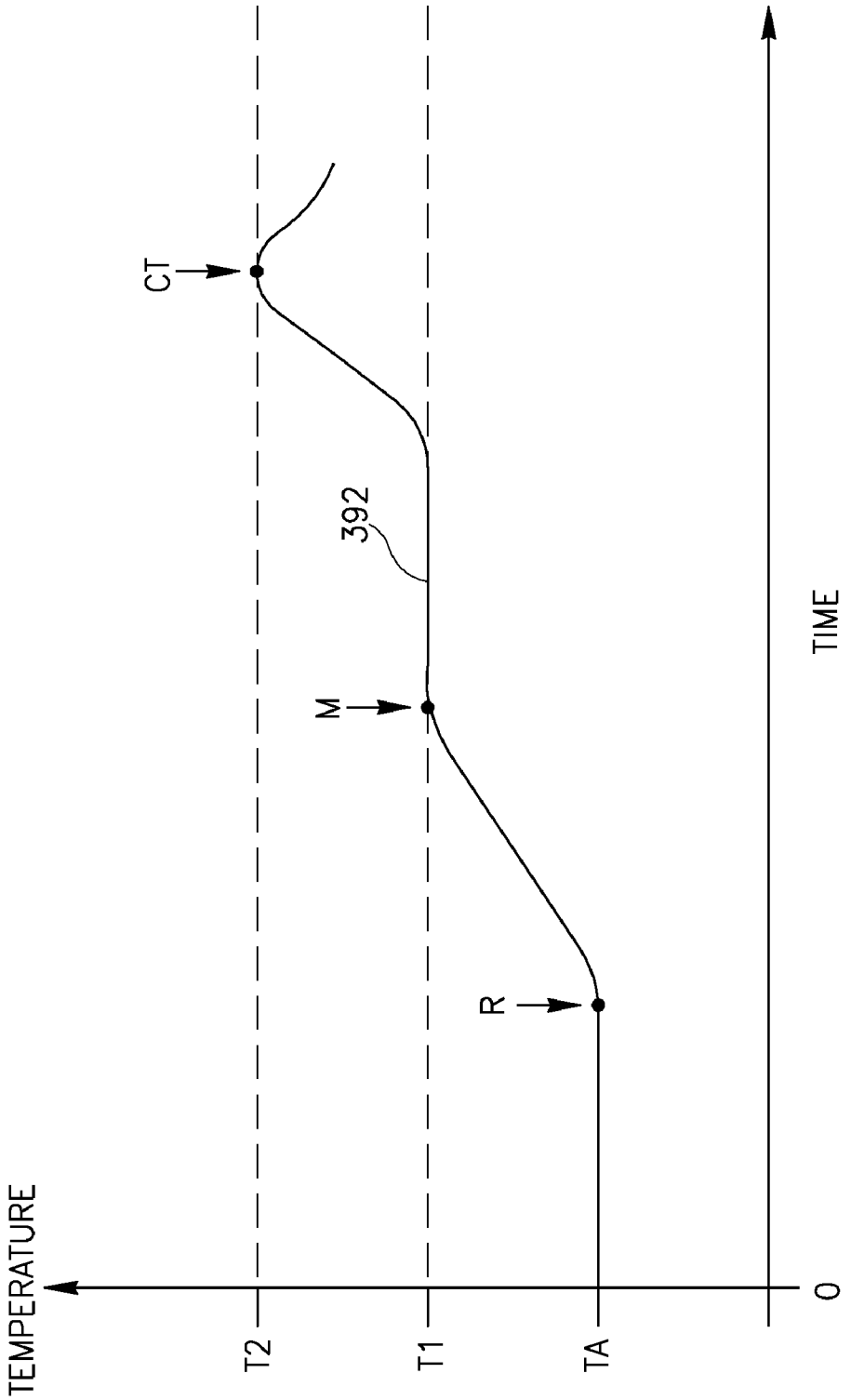

FIG.24

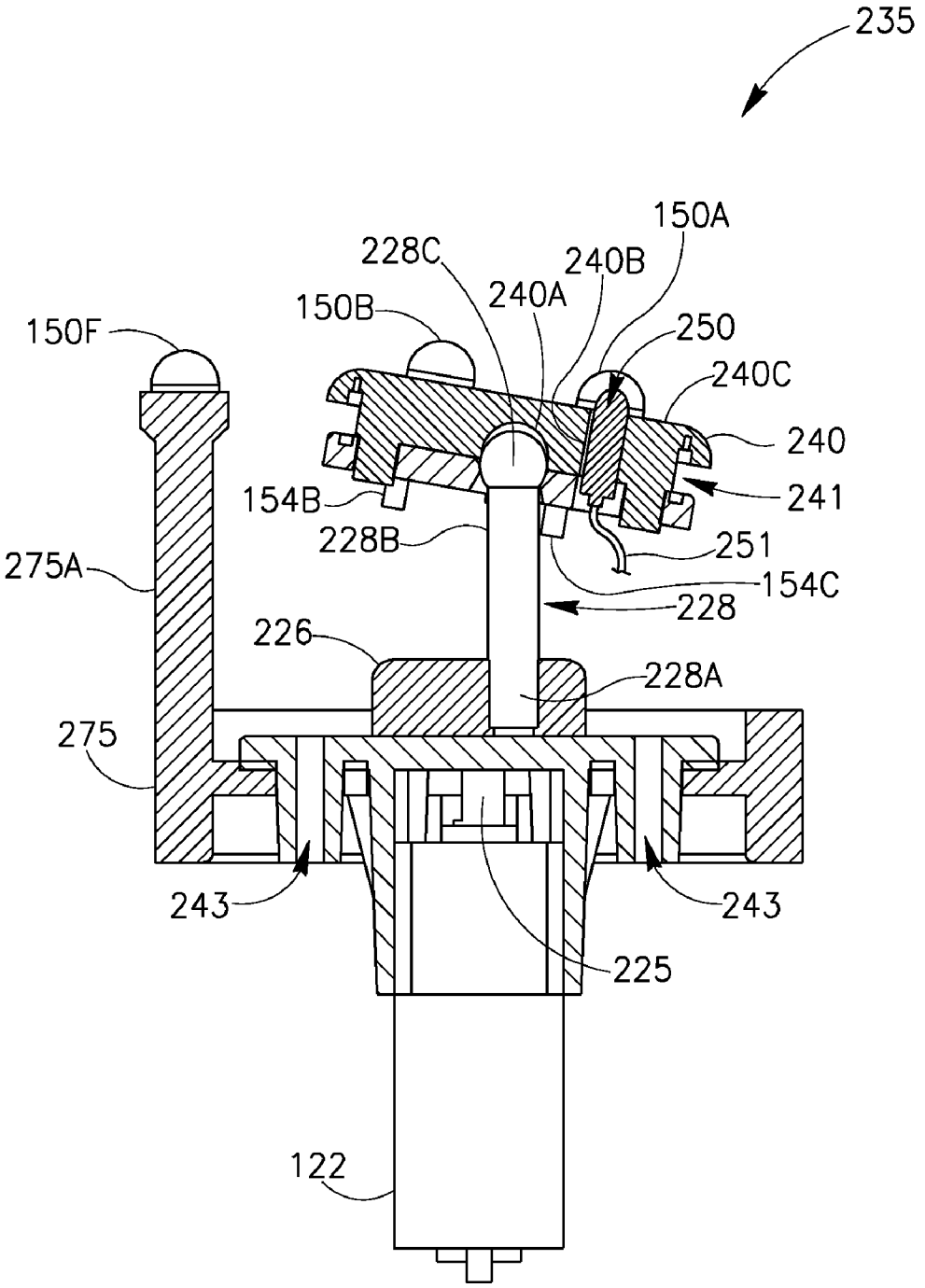
235
150A
228C
240B
240A
150B
250
150F
240C
240
241
154B
228B
251
275A
154C
228
226
228A
275
243
243
225
122

FIG.25

APPARATUS AND METHOD FOR SKIN TREATMENT

CROSS-REFERENCE TO RELATED US APPLICATIONS

[0001] This application is a divisional application of U.S. patent application Ser. No. 11/955,416, filed Dec. 13, 2007, which claims priority from and the benefit of U.S. Provisional Patent Application Ser. No. 60/869,767, filed on Dec. 13, 2006, entitled "Apparatus and Method for Skin Treatment," all of which applications are incorporated herein by reference in their entirety.

FIELD OF THE INVENTION

[0002] This invention relates in general to the fields of hair removal and skin treatment and more particularly to devices systems and methods combining the application of a depilatory agent to the skin with RF current induced heat treatment of the skin.

BACKGROUND OF THE INVENTION

[0003] The removal of unwanted facial and body hair can be accomplished with non-mechanized means, for example razors, tweezers or wax, all of which are uncomfortable to use, irritate the skin and/or cause damage to the skin.

[0004] Mechanized cutting means for cutting hair, for example dry shavers, in addition to being uncomfortable to use, are limited to cutting hair of a specific length. Beard trimmers, for example, cut facial hair stubble, but cannot cut longer hairs on the scalp.

[0005] The use of heated wires or other structures to cut hair from a skin surface has been proposed. However, a heat generator that generates heat of a sufficient magnitude to cut hair and that cuts the hair close to the skin, often damages the skin. Alternatively, since the heat generator is offset from the skin to prevent skin damage, unwanted stubble is left behind.

[0006] U.S. Pat. No. 3,934,115 to Peterson, discloses the use of parallel metal strips on the upper side of a ceramic facing that contacts the skin, are used to cut hair. U.S. Pat. No. 2,727,132 to Hills and Italian Patent IT 1201364P to Massimo disclose a continuously heated element for burning hair. U.S. Pat. No. 558,465, to Bell and U.S. Pat. No. 589,445, to D. Seide, U.S. Pat. No. 2,727,132 to G. S. Hills, U.S. Pat. No. 3,093,724 to G. L. Johnson, U.S. Pat. No. 5,064,993 to Hashimoto and U.S. Pat. No. 6,307,181 to Hashimoto, French Patent FR 2531655 to F. Solvinto, European Patent EP 0201189 to F. Solvinto, and French Patent No. FR 2612381 to E. Michit, all disclose a continuously heated wire for burning hair. U.S. Pat. No. 3,474,224 to J. F. Carter, discloses a circular comb device for burning nose hairs. Aside from physically separating the skin from the heated element, the above cited references do not appear to provide other protection against burning of the skin.

[0007] All the above devices and methods are in use for short term hair removal and do not provide permanent hair reduction.

[0008] Other types of devices are directed to long term hair removal. Electrolysis devices are based on the use of "electric needles". Such fine needles are inserted into the hair follicle and apply an electric current to each hair. The current heats the hair and causes its carbonization and also heats the tissue near the hair causing its coagulation and partial or full coagulation of the blood capillaries which supply blood to the hair follicle. While such devices can result in permanent hair removal, each hair must be treated individually, making hair removal by this method a tedious often painful, time consuming, and expensive.

[0009] Another class of known devices includes photothermolysis devices which are usually operated by physicians in clinics. These devices are based either on lasers (e.g. Ruby lasers) such as the laser device disclosed in U.S. Pat. No. 5,059,192 to Zaias or on an incoherent light source coupled with filters and elaborate electronics to provide pulses of various durations and wave lengths as described in U.S. Pat. No. 5,405,368 to Eckhouse and in European Patent publications EP 0 788 814 and EP 0736308. The above referenced Eckhouse patents and European Publications disclose heating the hair directly by a high flux of visible radiation that is absorbed by the hair follicles. Various filters and/or pulse lengths are used depending on the depth of penetration desired and the color of the hair being removed.

[0010] Another type of long term hair removal method, disclosed in U.S. Pat. No. 6,702,808 is based on using RF energy coupled with a light energy that provides selective pre-heating of the hair to be destroyed. Light energy is applied to the skin and selectively pre-heats the hair follicle above the temperature of the surrounding skin but below the coagulation temperature, RF energy is then applied to the skin to cause coagulation of the hair follicle since the applied RF energy causes more heating of the heated hair follicle than the surrounding skin. In order to achieve selective pre-heating of the hair follicle, the color of the hair should be darker than the surrounding skin. Thus this method suffers from the same deficiencies as Photothermolysis devices.

[0011] Other devices and methods for applying RF energy to the skin include, inter alia, Published International Patent Application, International Publication Number WO 2007/088541 to Azar et al., incorporated herein by reference in its entirety, which discloses apparatus for hair removal using a combination of a hot cutting element and an RF energy source for removing hair, and co-pending U.S. patent application Ser. No. 11/828,371 to Azar et al., filed Jul. 26, 2007 and entitled "APPARATUS AND METHOD FOR NON-INVASIVE TREATMENT OF SKIN TISSUE" which discloses a device for skin treatment having multiple RF electrodes.

[0012] Methods for hair removal using application of various different depilatory compositions and substances are well known in the art. Such methods of chemical depilation involve application of depilatory creams, liquids, foams or ointments to the surface of the skin and hairs, waiting a certain period of time for the depilatory composition to affect the hairs and wiping or removing or washing away the depilatory composition. Such depilatory compositions and substances may include, inter alia, active ingredients such as but not limited to potassium thioglycolate, other thioglycolates, sulphhydryl group (SH group) containing compounds, calcium hydroxide and other different active ingredients. Such depilatory compositions may also include different various vehicles, cream bases, solvents, emulsifiers, skin emollients, pH adjusting substances, perfume and the like.

[0013] The chemical composition, formulation and preparation of such depilatory substances and/or depilatory compositions and formulation is well known in the art, is not the subject matter of the present invention and is therefore not described in detail hereinafter.

[0014] Typically, when depilation is desired, the depilatory composition is applied to a region of the skin in the form of a

liquid, spray, ointment, cream, foam, or the like. After a certain period of time, the depilatory substance is removed from the skin by washing or by other methods, to avoid undesirable effects on the skin such as, rash, excessive keratinolytic effects, and other side effects of hair removal.

[0015] U.S. Pat. No. 6,533,775 to Rizoiu incorporated herein by reference in its entirety, discloses a shaving device including a depilatory cream reservoir, a light source for applying a beam of diffused light to the skin, and a blade for removing the hairs. The Rizoiu device has certain disadvantages which prevent efficient use thereof for shaving and hair removal. One problem is that most commercially available efficient depilatory compositions are opaque to visible light. Another disadvantage is that the light energy emission assembly used for diffusing the light onto the skin is cumbersome and may require the use of mirrors, beams splitters, light guides, light diffusers and/or other optical assemblies that may be required for delivering the light to the surface of the skin. Such optical devices may be expensive and cumbersome. Yet another problem is that in order to absorb the light certain photosensitive components may have to be added to the depilatory composition or the wavelength of the light may have to be matched to the wavelength to which the cream is sensitive. In other words, the efficiency of light absorption may depend on the particular wavelength of light used and on the absorbance of the light by the cream or by the cream components being used. An additional problem with the Rizoiu device is that the blade included in the Rizoiu device may mechanically disrupt, nick or tear the skin tissues that were softened by the chemical and keratinolytic action of the depilatory cream, causing pain and/or discomfort to the user and may result in infection of cut skin regions.

SUMMARY OF THE INVENTION

[0016] There is therefore provided a device for treatment of skin tissue. The device includes RF electrodes for applying RF energy to the skin and a dispensing unit for dispensing a depilatory substance onto the skin.

[0017] Furthermore, in accordance with an embodiment of the device, the device includes an RF energy source for energizing said RF electrodes.

[0018] Furthermore, in accordance with an embodiment of the device, the RF energy source may be an RF energy source included in the device or an RF energy source disposed outside the device and electrically coupled to the R-F electrodes.

[0019] Furthermore, in accordance with an embodiment of the device the device further including a hand held housing, wherein the RF energy source, the RF electrodes and the dispensing unit are attached to the housing.

[0020] Furthermore, in accordance with an embodiment of the device, the device further includes a hand held housing which is a part of a system including an RF current generating unit external to said the and electrically couplable to the RF electrodes for providing RF energy thereto. The RF electrodes and the dispensing unit are attached to the hand held housing.

[0021] Furthermore, in accordance with an embodiment of the device, the RF electrodes are selected from fixed (stationary) RF electrodes and movable RF electrodes.

[0022] Furthermore, in accordance with an embodiment of the device, the RF electrodes are RF electrodes movable relative to the device and to the surface of the skin for distributing the RF energy to various parts of the skin and for spreading the depilatory substance on the surface of the skin.

[0023] Furthermore, in accordance with an embodiment of the device the RF electrodes are attached to an RF electrode assembly.

[0024] Furthermore, in accordance with an embodiment of the device, the RF electrode assembly includes a motor for moving at least one RF electrode of the RF electrodes.

[0025] Furthermore, in accordance with an embodiment of the device, the motor is an electrical motor.

[0026] Furthermore, in accordance with an embodiment of the device the RF electrodes are attached to a movable RF electrode carrying member coupled to the motor.

[0027] Furthermore, in accordance with an embodiment of the device, the device also includes a stabilizing member attached to the housing for stabilizing the position of the device on the skin while the RF electrode carrying member is moving along the surface of the skin.

[0028] Furthermore, in accordance with an embodiment of the device, the stabilizing member has a first portion attached to the housing and a second portion configured for contacting the skin.

[0029] Furthermore, in accordance with an embodiment of the device, the second portion of the stabilizing member has multiple spaced apart skin contacting portions for contacting the skin.

[0030] Furthermore, in accordance with an embodiment of the device, the stabilizing member is detachably attached to the housing.

[0031] Furthermore, in accordance with an embodiment of the device, the motor has a rotatable shaft and the RF electrode carrying member is eccentrically attached to the shaft.

[0032] Furthermore, in accordance with an embodiment of the device, the RF electrode carrying member is eccentrically attached to a coupling member attached to the rotatable shaft.

[0033] Furthermore, in accordance with an embodiment of the device, the motor has a rotatable shaft having a first shaft portion proximal to the motor and a second shaft portion bent at an angle relative to the first shaft portion of the shaft and the RF electrode carrying member is movably attached to the second shaft portion.

[0034] Furthermore, in accordance with an embodiment of the device, the second shaft portion has a spherically shaped member formed at its end distal from said motor. The RF electrode carrying member has a spherically shaped socket formed therein. The spherically shaped member is disposed within the spherically shaped socket to enable the RF electrode carrying member to move at an angle to said second shaft portion.

[0035] Furthermore, in accordance with an embodiment of the device, the second shaft portion is movably disposed within a recess formed within the RF electrode carrying member.

[0036] Furthermore, in accordance with an embodiment of the device, the RF electrode carrying member is movably attached to the RF electrode assembly or to the housing by one or more spring-like elements.

[0037] Furthermore, in accordance with an embodiment of the device, the spring-like members are selected from a plurality of springs, a plurality of elastic members, and a flexible sleeve-like member.

[0038] Furthermore, in accordance with an embodiment of the device, the flexible sleeve-like member is a concertina-like member.

[0039] Furthermore, in accordance with an embodiment of the device, the spring-like member(s) is a flexible sleeve-like

member having a first end attached to the housing or to the RF electrode assembly and a second end attached to the RF electrode carrying member.

[0040] Furthermore, in accordance with an embodiment of the device, the spring-like member(s) are electrically conducting elements electrically connected to the RF electrodes for providing RF energy to said RF electrodes.

[0041] Furthermore, in accordance with an embodiment of the device, the dispensing unit is selected from a hand operated dispensing unit, a pump operated dispensing unit, a valve operated dispensing unit, a pressurized dispensing unit, a propellant operated dispensing unit, a disposable dispensing unit, a replaceable dispensing unit, a refillable dispensing unit, a canister based dispensing unit, a dispensing unit including a fixed reservoir, a dispensing unit including a replaceable reservoir, and a dispensing unit including a disposable reservoir.

[0042] Furthermore, in accordance with an embodiment of the device, the dispensing unit is fluidically coupled to one or more hollow conduits passing through one or more of the RF electrodes for applying the depilatory substance to the skin through the one or more conduits.

[0043] Furthermore, in accordance with an embodiment of the device, the dispensing unit is fluidically coupled to one or more hollow conduits passing through an RF electrode carrying member to which said RF electrodes are attached, for applying the depilatory substance to the skin through the conduit(s).

[0044] Furthermore, in accordance with an embodiment of the device, the dispensing unit includes a replaceable squeezable reservoir containing the depilatory substance and a pressure exerting mechanism configured for applying pressure on the squeezable reservoir.

[0045] Furthermore, in accordance with an embodiment of the device, the pressure exerting mechanism includes a compartment for accommodating the reservoir and a spring loaded pressure plate configured for applying pressure on the squeezable reservoir.

[0046] Furthermore, in accordance with an embodiment of the device, the squeezable reservoir is a squeezable bag made from a pliable material.

[0047] Furthermore, in accordance with an embodiment of the device, the pliable material is a polymer based pliable material.

[0048] Furthermore, in accordance with an embodiment of the device, the squeezable reservoir also includes a dispensing tube configured to be sealingly attached to a depilatory substance inlet port included in the dispensing unit.

[0049] Furthermore, in accordance with an embodiment of the device, the device includes an RF electrode carrying member to which said RF electrodes are attached, and the squeezable reservoir also includes an elongated flexible hollow dispensing tube configured to be inserted through a hollow guiding member attached to the RF electrode carrying member. The dispensing tube is capable of being inserted into said guiding member and reaching an opening on the surface of said RF electrode carrying member facing said skin wherein said depilatory substance may be applied to the skin through an opening at the end of said dispensing tube.

[0050] Furthermore, in accordance with an embodiment of the device, the dispensing tube further includes a controllably openable valve for controlling the dispensing of said depilatory substance through said dispensing tube.

[0051] Furthermore, in accordance with an embodiment of the device, the dispensing tube is an elastic member having a lumen in fluidic communication with the squeezable reservoir and the device also includes a mechanism for constricting or closing the lumen of the dispensing tube by applying pressure on the dispensing tube to regulate or terminate the passage of depilatory substance member through said lumen.

[0052] Furthermore, in accordance with an embodiment of the device, the device also includes at least one temperature sensor for determining the temperature of the skin.

[0053] Furthermore, in accordance with an embodiment of the device, the temperature sensor is selected from a remote sensing sensor which does not contact the skin, a contact type sensor operable in contact with the skin and any combinations thereof.

[0054] Furthermore, in accordance with an embodiment of the device, the temperature sensor is selected from an infrared detecting temperature sensor, a thermistor based temperature sensor and any combinations thereof.

[0055] Furthermore, in accordance with an embodiment of the device, the device also includes at least one temperature sensor for determining the temperature of one or more of the RF electrodes.

[0056] Furthermore, in accordance with an embodiment of the device, the temperature sensor(s) is a thermistor.

[0057] There is also provided, in accordance with an embodiment of the device, a device for treatment of skin tissue. The device includes means for applying RF energy to the skin and means for applying a depilatory substance onto the skin.

[0058] There is also provided, in accordance with an embodiment of the device, a device for applying RF energy to skin tissue treated with a depilatory substance, the device includes a housing, an RF electrode assembly attached to the housing and including RF electrodes for applying RF energy to the skin, at least one of the RF electrodes is movable relative to the housing and to the surface of the skin for distributing the RF energy to various parts of the skin and for spreading the depilatory substance along the surface of the skin. The device also includes an RF energy source for energizing the RF electrodes.

[0059] Furthermore, in accordance with an embodiment of the device, the RF energy source is selected from an RF energy source disposed within the housing and electrically connectable to the RF electrodes, and an RF energy source disposed outside of the housing and electrically connectable to the RF electrodes.

[0060] Furthermore, in accordance with an embodiment of the device, the RF electrode assembly includes a motor for moving the at least one RF electrode.

[0061] Furthermore, in accordance with an embodiment of the device, the motor is an electrical motor.

[0062] Furthermore, in accordance with an embodiment of the device, the RF electrodes are attached to a movable RF electrode carrying member coupled to the motor.

[0063] Furthermore, in accordance with an embodiment of the device, the motor has a rotatable shaft and the RF electrode carrying member is eccentrically attached to the shaft.

[0064] Furthermore, in accordance with an embodiment of the device, the motor has a rotatable shaft having a first shaft portion proximal to the motor and a second shaft portion bent at an angle relative to the first shaft portion and wherein the RF electrode carrying member is attached to the second shaft portion.

[0065] Furthermore, in accordance with an embodiment of the device, the second shaft portion has a spherically shaped member formed at its end distal from the motor. The RF electrode carrying member has a spherically shaped socket formed therein. The spherically shaped member is disposed within the spherically shaped socket to enable the RF electrode assembly to move at an angle to the second shaft portion.

[0066] Furthermore, in accordance with an embodiment of the device, the electrode carrying member is movably attached to the RF electrode assembly or to the housing by one or more spring-like members.

[0067] Furthermore, in accordance with an embodiment of the device, the one or more spring-like members are selected from a plurality of springs, a plurality of elastic members, and a flexible sleeve-like member.

[0068] Furthermore, in accordance with an embodiment of the device, the flexible sleeve-like member is a concertina-like member.

[0069] Furthermore, in accordance with an embodiment of the device, the one or more spring-like members is a flexible sleeve like member. The flexible sleeve like member has a first end sealingly attached to the housing or to the RF electrode assembly. The flexible sleeve-like member has a second end sealingly attached to the RF electrode carrying member.

[0070] Furthermore, in accordance with an embodiment of the device, the one or more spring-like members is a flexible sleeve-like member. The flexible sleeve like member has a first end attached to the housing or to the RF electrode assembly and a second end attached to the RF electrode carrying member.

[0071] Furthermore, in accordance with an embodiment of the device, the one or more spring-like members are electrically conducting elements electrically connected to the RF electrodes for providing RF energy to the RF electrodes.

[0072] Furthermore, in accordance with an embodiment of the device, the device also includes a stabilizing member attached to the housing for stabilizing the position of the device on the skin while the RF electrode carrying member is moving along the surface of the skin.

[0073] Furthermore, in accordance with an embodiment of the device, the stabilizing member has a first portion attached to the housing and a second portion configured for contacting the skin.

[0074] Furthermore, in accordance with an embodiment of the device, the second portion of the stabilizing member has a plurality of spaced apart skin contacting portions for contacting the skin.

[0075] Furthermore, in accordance with an embodiment of the device, the stabilizing member is detachably attached to the housing.

[0076] Furthermore, in accordance with an embodiment of the device, the device also includes at least one dispensing unit for dispensing a depilatory substance onto the skin.

[0077] Furthermore, in accordance with an embodiment of the device, the at least one dispensing unit is selected from a hand operated dispensing unit, a pump operated dispensing unit, a valve operated dispensing unit, a pressurized dispensing unit, a propellant operated dispensing unit, a disposable dispensing unit, a replaceable dispensing unit, a refillable dispensing unit, a canister based dispensing unit, a dispensing unit including a fixed reservoir, a dispensing unit including a replaceable reservoir, and a dispensing unit including a disposable reservoir and any combinations thereof.

[0078] Furthermore, in accordance with an embodiment of the device, the at least one dispensing unit includes a replaceable squeezable reservoir including the depilatory substance and a pressure exerting mechanism configured for applying pressure on the squeezable reservoir.

[0079] Furthermore, in accordance with an embodiment of the device, the pressure exerting mechanism includes a compartment for accommodating the squeezable reservoir and a spring loaded pressure plate configured for applying pressure on the squeezable reservoir.

[0080] Furthermore, in accordance with an embodiment of the device, the squeezable reservoir is a squeezable bag made from a pliable material.

[0081] Furthermore, in accordance with an embodiment of the device, the pliable material is a polymer based pliable material.

[0082] Furthermore, in accordance with an embodiment of the device, the pliable material is polyethylene.

[0083] Furthermore, in accordance with an embodiment of the device, the squeezable reservoir also includes a dispensing tube configured to be sealingly attached to a depilatory substance inlet port included in the dispensing unit.

[0084] Furthermore, in accordance with an embodiment of the device, the device includes an RF electrode carrying member to which the RF electrodes are attached, and wherein the squeezable reservoir also includes an elongated flexible hollow dispensing tube configured to be inserted through a hollow guiding member attached to the RF electrode carrying member. The dispensing tube is capable of being inserted into the guiding member and reaching an opening on the surface of the RF electrode carrying member facing the skin. The depilatory substance may be applied to the skin through an opening at the end of said dispensing tube.

[0085] Furthermore, in accordance with an embodiment of the device, the dispensing tube further includes a controllably openable valve for controlling the dispensing of the depilatory substance through the dispensing tube.

[0086] Furthermore, in accordance with an embodiment of the device, the dispensing tube is an elastic member having a lumen in fluidic communication with the squeezable reservoir. The device also includes a mechanism for constricting or closing the lumen of the dispensing tube by applying pressure on the dispensing tube to regulate or terminate the passage of the dispensing member through the lumen.

[0087] Furthermore, in accordance with an embodiment of the device, the dispensing unit is fluidically coupled to one or more hollow conduits passing through one or more of the RF electrodes for applying the depilatory substance to the skin through the one or more conduits.

[0088] Furthermore, in accordance with an embodiment of the device, the dispensing unit is fluidically coupled to one or more hollow conduits passing through an RF electrode carrying member to which the RF electrodes are attached, for applying the depilatory substance to the skin through the one or more conduits.

[0089] Furthermore, in accordance with an embodiment of the device, the device also includes at least one temperature sensor for determining the temperature of the skin.

[0090] Furthermore, in accordance with an embodiment of the device, the temperature sensor(s) are selected from a remote sensing sensor which does not contact the skin, a contact type sensor operable in contact with the skin and any combinations thereof.

[0091] Furthermore, in accordance with an embodiment of the device, the temperature sensor(s) are selected from an infra-red detecting temperature sensor, a thermistor based temperature sensor and any combinations thereof.

[0092] Furthermore, in accordance with an embodiment of the device, the device also includes at least one temperature sensor for determining the temperature of one or more of the RF electrodes.

[0093] Furthermore, in accordance with an embodiment of the device, the at least one temperature sensor is a thermistor.

[0094] There is also provided a method for treatment of skin tissue, the method comprising the steps of, applying a depilatory substance to the skin, and applying RF energy to the skin through RF electrodes for heating the skin and the depilatory substance.

[0095] Furthermore, in accordance with an embodiment of the method, the method also includes the step of sensing the temperature of at least one of the RF electrodes and terminating the step of applying RF energy to the skin if the temperature of at least one of the RF electrodes exceeds a temperature threshold value.

[0096] Furthermore, in accordance with an embodiment of the method, the method further includes the step of terminating the applying to the skin of the depilatory substance if the temperature of at least one of the RF electrodes exceeds a temperature threshold value.

[0097] Furthermore, in accordance with an embodiment of the method, the method also includes the step of sensing the temperature of the skin and terminating the step of applying RF energy to the skin if the temperature of the skin exceeds a temperature threshold value.

[0098] Furthermore, in accordance with an embodiment of the method, the method also includes the step of terminating the applying to the skin of the depilatory substance if the temperature of the skin exceeds a temperature threshold value.

[0099] Furthermore, in accordance with an embodiment of the method, the method also includes the step of sensing the temperature of at least one of the RF electrodes and providing an indication if the temperature of the RF electrode(s) exceeds a temperature threshold value.

[0100] Furthermore, in accordance with an embodiment of the method, the indication is selected from a visual signal, an auditory signal and combinations thereof.

[0101] Furthermore, in accordance with an embodiment of the method, the method also includes the step of sensing the temperature of the skin and providing an indication if the temperature of the skin exceeds a temperature threshold value.

[0102] Furthermore, in accordance with an embodiment of the method, the indication is selected from a visual signal, an auditory signal and combinations thereof.

[0103] Furthermore, in accordance with an embodiment of the method, the method also includes the step of moving the RF electrodes along said skin.

[0104] Furthermore, in accordance with an embodiment of the method, the RF electrodes are attached to a motorized movable RF electrode carrying member, wherein the step of moving the RF electrodes comprises automatically moving the movable RF electrode carrying member.

[0105] Furthermore, in accordance with an embodiment of the method, the movable RF electrode carrying member is a rotatable member, wherein the step of automatically moving comprises automatically rotatingly moving the movable RF electrode carrying member.

[0106] Furthermore, in accordance with an embodiment of the method, the method also includes the step of sensing the temperature of the skin and terminating the moving of the RF electrodes along the skin if the temperature of the skin exceeds a temperature threshold value.

[0107] Furthermore, in accordance with an embodiment of the method, the step of moving comprises automatically moving the RF electrodes along the skin, wherein the method also includes the step of automatically terminating the applying of RF energy to the skin and the moving of the RF electrodes along the skin if the temperature of the skin exceeds a temperature threshold value.

[0108] Furthermore, in accordance with an embodiment of the method, the method also includes the step of sensing the temperature of at least one of the RF electrodes and automatically terminating the applying of RF energy to the skin and the moving of the RF electrodes along the skin if the temperature of at least one of the RF electrodes exceeds a temperature threshold value.

[0109] Furthermore, in accordance with an embodiment of the method, the step of moving comprises automatically moving said RF electrodes along the skin, wherein the method also includes the step of automatically terminating the applying of RF energy to the skin and the moving of the RF electrodes along the skin if the temperature of at least one of the RF electrodes exceeds a temperature threshold value.

[0110] Furthermore, in accordance with an embodiment of the method, **95**. the step of applying a depilatory substance to the skin is selected from,

[0111] manually dispensing the depilatory substance onto the skin,

[0112] controllably dispensing the depilatory substance onto the skin, and

[0113] automatically dispensing the depilatory substance onto the skin.

[0114] There is also provided a method for treatment of skin tissue. The method includes the steps of applying to the skin a depilatory substance, and applying RF energy to the skin for selectively heating skin tissues in the vicinity of hair shafts of the skin to selectively increase the effect of the depilatory substance on the skin tissues.

[0115] There is finally provided a method for treatment of skin tissue. The method includes the steps of applying to the skin a depilatory substance, and applying RF energy to the skin for preferentially heating at least the skin tissues in the vicinity of hair shafts of the skin and the hair shafts, to selectively increase the effect of the depilatory substance on at least one of the skin tissues and the hair shafts.

BRIEF DESCRIPTION OF THE DRAWINGS

[0116] The invention is herein described, by way of example only, with reference to the accompanying drawings, in which like components are designated by like reference numerals, wherein:

[0117] FIGS. **1-2** are photographs illustrating the results of experiments for removing hair by using a chemical depilatory composition alone as compared to using the combination of a chemical depilatory composition and heating the skin by direct application of RF currents, in accordance with an embodiment of a skin treating method of the present application;

[0118] FIGS. **3** and **4** are photomicrographs illustrating the skin region surrounding different human hairs after application of a chemical depilatory composition without heating of the skin (FIG. **4**) and after combined application of a chemical depilatory composition with RF heating of the skin (FIG. **5**), in accordance with an embodiment of a skin treating method of the present application;

[0119] FIG. **5** is a photomicrograph illustrating selective damage of the skin regions surrounding human hairs two days after application of a depilatory composition combined with RF heating of the skin, in accordance with an embodiment of the a skin treating method of the present application;

[0120] FIG. **6** is a photomicrograph illustrating a region of skin demonstrating damage caused to the skin regions surrounding the hairs after treatment of the skin with a chemical depilatory composition combined with skin heating using the application of RF currents to the skin, in accordance with an embodiment of a skin treating method of the present application;

[0121] FIG. **7** is an isometric view schematically illustrating an exemplary RF current applicator system useful for applying RF currents to the skin in the presence of depilatory substances or compositions in accordance with an embodiment of the skin treating systems of the present application;

[0122] FIG. **8** is a schematic part cross-sectional diagram illustrating a device having a replaceable RF electrode assembly and a reservoir for applying a depilatory substance or composition to the skin and for applying RF energy to the depilatory substance treated skin, in accordance with an embodiment of the skin treating devices of the present application;

[0123] FIG. **9** is a schematic front view of the device illustrated in FIG. **8**;

[0124] FIG. **10** is a schematic part cross-sectional diagram illustrating a device having a refillable reservoir for applying a depilatory substance or composition to the skin and for applying RF energy to the depilatory substance treated skin, in accordance with an embodiment of the skin treating devices of the present application;

[0125] FIG. **11** is a schematic front view of the device illustrated in FIG. **10**;

[0126] FIG. **12** is a schematic part cross-sectional diagram illustrating a device for applying RF energy to skin treated with a depilatory substance. The device has an infrared thermometer for monitoring skin temperature, in accordance with an embodiment of the skin treating devices of the present application;

[0127] FIG. **13** is a schematic front view of the device illustrated in FIG. **12**;

[0128] FIG. **14** is a schematic part cross-sectional diagram illustrating a device having a replaceable RF electrode assembly having a passage passing therethrough and a reservoir for applying a depilatory substance or composition to the skin and for applying RF energy to the depilatory substance treated skin, in accordance with an embodiment of the skin treating devices of the present application;

[0129] FIG. **15** is a schematic part cross-sectional part isometric side view illustrating a device having a hand operated pumping dispenser for dispensing depilatory substance and a motorized movable RF electrode assembly, in accordance with an embodiment of the skin treating devices of the present application;

[0130] FIG. **16** is a schematic side view illustrating the motorized RF electrode assembly of the device of FIG. **15**.

[0131] FIG. **17** is a schematic exploded isometric view of a skin treatment device having a stabilizing member and a flexible RF electrode assembly protecting sleeve member, in accordance with an embodiment of the skin treating devices of the present application;

[0132] FIG. **18** is a schematic isometric view illustrating the skin treatment device of FIG. **18** without the stabilizing member and the flexible electrode assembly protecting sleeve;

[0133] FIG. **19** is a schematic cross-sectional diagram illustrating in detail the motorized movable RF electrode assembly of the skin treatment device of FIG. **18**;

[0134] FIG. **20** is a schematic cross-sectional diagram illustrating part of a skin treating device having a disposable depilatory substance reservoir, in accordance with an embodiment of the skin treating devices of the present application;

[0135] FIGS. **21** and **22** are photographs illustrating differences in appearance of human skin after two different skin treatment methods were applied to the skin; and

[0136] FIG. **23** is a schematic flow diagram illustrating the steps of a method of hair removal and/or skin treatment combining the application of a depilatory composition to the skin with the application of RF currents to the treated skin region;

[0137] FIG. **24** is a schematic graph illustrating a curve representing the skin temperature as a function of time during various stages of operation of skin treating devices and systems of the present application; and

[0138] FIG. **25** which is a schematic part cross-sectional diagram illustrating in detail another motorized movable RF electrode assembly having movable and stationary RF electrodes, suitable for use with the skin treatment device of FIG. **18**.

DETAILED DESCRIPTION OF THE INVENTION

Notation Used Throughout

[0139] The following notation is used throughout this document.

Term	Definition
AC	Alternating current
DC	Direct current
dpi	Dots per inch
EM	Electromagnetic
GHz	Gigahertz
MHz	Megahertz
PCB	Printed circuit board
RF	Radio Frequency

[0140] The present invention provides methods, devices and systems for performing skin treatment by applying to the skin a chemical depilatory composition and heating the skin by application of RF currents. The skin treatment results, inter alia, in efficient hair removal with improved long term depilation.

[0141] The terms "depilatory composition" and "depilatory substance" and "depilatory agent" as used herein interchangeably are defined as any substance or compound or mixture of substances or compounds which includes at least one substance or compound that is chemically active in removing hair and/or reducing the rate of hair growth, and/or preventing and/or retarding and/or inhibiting hair growth.

However, it is noted that such a depilatory composition or depilatory substance or depilatory agent may also include additional substances and/or compounds including but not limited to, solvents, gelling agents, gels, pH adjusting components, buffer(s), perfume, coloring agents, skin emollients, emulsifiers, skin soothing agents (such as, but not limited to, Aloe Vera extract), inert vehicles and the like, as is known in the art.

[0142] The methods and devices of the present invention are based on the application of RF currents to skin which is treated by a depilatory substance (or depilatory composition or agent). The application of RF currents heats the skin tissue and the depilatory substance or composition applied thereto to a temperature higher than the normal skin temperature. This elevation of temperature of the skin and the depilatory possibly increases the rate of the chemical action of the active ingredient(s) of the depilatory substance or composition, accelerates the depilation and improves the immediate as well as the long term effectiveness of the skin treatment.

[0143] The superior results obtained by heating the skin using RF currents in the presence of depilatory substance or composition in contact with the skin may be at least partially attributed to the increased RF current density in the tissues regions adjacent the hair shaft and hair follicles resulting in an elevated temperature in these regions and increased efficacy of chemical depilatory action in these regions. This selective effect is obtained by the selection of RF currents for heating the skin.

[0144] The details of exemplary (non-limiting) methods and devices used to demonstrate skin treatment using RF currents application to depilatory composition treated skin are listed in the experiments described below.

Experiment 1

[0145] The Depilatory composition selected for use in the experiment was "Veet Rasera—Gel Depilatorio", moisture enriched depilatory gel, packaged in a spray can, commercially available from RECKITT BENCKISER, UK. The active ingredients indicated by the manufacturer are potassium thioglycolate and calcium hydroxide.

[0146] Reference is now made to FIG. **7** which is an isometric view schematically illustrating an exemplary RF current applicator system used for applying RF currents to the skin in the presence of depilatory substances or compositions in accordance with an embodiment of the present invention.

[0147] The RF current application system **10** includes a hand-held RF current applicator **11** which was used in the experiments described herein. The system **10** also includes an RF current generating unit **12** rated at 32 Watt total power and 6.4 Watt of power delivered to the skin.

[0148] RF currents at a frequency of 1 MHz (sinusoidal AC) and a voltage of 240 Volt (peak to peak) were delivered to the skin through three hemisphere-like electrically conducting RF electrodes **16**A, **16**B and **16**C which where disposed in the RF current applicator **11**. The RF currents were delivered as RF bursts having a burst duration of two milliseconds and inter-burst time intervals of eight milliseconds (equivalent to a 20% duty cycle at a 100 Hz burst frequency). The hand-held applicator **11** is suitably connected to the RF current generating unit **12** by suitable isolated electrical conductors (not shown) included in a power cable **13**. The RF current generating unit **12** was connected to the mains electrical outlet (not shown) through a regular insulated power cord (not shown for the sake of clarity of illustration). The RF current applicator **11** includes an ON/OFF switch **18** for controlling the application of RF currents to the skin.

[0149] It will be appreciated by those skilled in the art that the systems and devices disclosed herein are not limited to being operated by mains alternating currents and may also be operated by any suitable direct current (DC) source, such as but not limited to, a DC power supply, one or more battery, any suitable primary electrochemical cell(s), primary electrochemical cell(s), rechargeable electrochemical cell(s) and fuel cell(s). suitable combinations of power sources may be also used as is known in the art. Such compact power sources may be used in implementing small compact (preferably hand-held systems in which the RF current generating unit may be a small unit built into the RF current applicator **11**. Such portable hand-held systems (not shown in FIG. **7**) may include any of the above described compact power source(s) within a suitable compartment in the applicator **11**.

[0150] In the specific applicator used in this experiment, the diameter of each of the RF electrodes **16**A, **16**B and **16**B was five millimeters and the distance between the centers of any two electrodes was ten millimeters. The RF currents were applied to the skin in a bipolar electrode configuration in which one of the electrodes **16**A, **16**B and **16**C was used as a current source and the remaining two electrodes were used the current sink. It is noted that this specific sink/source arrangement is not obligatory and any other suitable electrode configurations may also be used in delivering the RF currents to the skin, depending, inter alia, on the number, type and geometrical arrangement of the electrodes being used.

[0151] It is noted that the methods and disclosed herein are not limited to use of the particular RF current applicator **10** disclosed hereinabove. Rather, any suitable type of device capable of delivering RF currents to the skin for heating the skin may be used for implementing the methods of the present invention as will be easily implemented by those skilled in the art, without undue experimentation. For example, the size and shape of the applicator, the number size and configuration of RF electrodes included in the RF device and the parameters of RF currents delivery to the skin may be changed depending, inter alia, on the type of the RF applicator device, the nature of the depilatory composition or substance being used, the dimensions of skin region to be treated and other practical and manufacturing considerations.

[0152] The experiment was performed on the right hand of one of the inventors. Two regions of skin **2** and **4** (of FIGS. **1-2**) having a diameter of roughly four centimeters each were marked on the surface of the skin with black paint. The distance between the two marked skin regions **2** and **4** was approximately two centimeters. The two skin regions **2** and **4** were than both sprayed with the VEET—Rasera depilatory gel and a stopwatch was activated to determine the time of treatment.

[0153] The skin region **2** was left as it is (for use as a control region) and the region **4** was further treated by applying the RF current applicator **10** to the skin such that the three RF electrodes **16**A, **16**B and **16**C were in contact with the depilatory gel coated skin. The RF current applicator **10** was turned on and moved within the skin region **4** using rotating movements confined within the black paint circle surrounding the skin region **4**. the regions **2** and **4** were visually observed during the experiments. At sixty (60) seconds from the start of the RF current application to skin region **4** most of the hairs were observed to be removed from the skin region **4**. The RF current application was continued for an additional ten sec-

onds (giving a total time of RF current treatment of seventy seconds) and then the RF current applicator was removed and the skin regions **2** and **4** were both washed with tap water to remove the depilatory gel. The hand was then dried and the part of the hand including the skin regions **2** and **4** was scanned by a model CanoScan LiDE60 scanner commercially available from Cannon, Japan, to record the appearance of the skin regions **2** and **4**. The scanner has a resolution of 2400×2400 dpi.

[0154] Reference is now made to FIGS. **1-2** which are photographs obtained by the CanoScan scanner illustrating the results of experiments for removing hair by using the combination of a chemical depilatory composition and heating the skin by direct application of RF currents, in accordance with an embodiment of the present invention.

[0155] FIG. **1** illustrates the skin regions **2** and **4** before the beginning of the experiment (prior to application of the depilatory gel to the regions **2** and **4**). The skin regions **2** and **4** are seen to be covered with hairs.

[0156] FIG. **2** illustrates the skin regions **2** and **4** immediately after the termination of the RF current treatment and washing of the treated hand. The control skin region **2** (which was treated with the depilatory gel for about seventy seconds without the application of RF currents) seemed to have a density of hair similar to the density of hairs in the same skin region prior to treatment (compare to the same skin region in FIG. **1**). While in the skin region **4** which was treated with the depilatory gel and by application of RF currents thereto, most of the hairs were removed. Upon visual and tactile manual inspection, the skin region **4** was smooth and almost free of hairs. A slight redness of the skin of region **4** was also observed for about five minutes after termination of the RF currents. This redness disappeared after about five minutes.

[0157] The results of EXPERIMENT 1 demonstrate that application of RF currents to the skin for a relatively short time period in the presence of a depilatory composition, was effective in removing hairs, while application of the same depilatory composition alone to skin for the same time period was not effective for hair removal.

[0158] Reference is now made to FIGS. **3** and **4** which are photomicrographs illustrating the skin region surrounding different human hairs after application of a chemical depilatory composition without heating of the skin (FIG. **3**) and after combined application of a chemical depilatory composition with RF heating of the skin (FIG. **4**), in accordance with an embodiment of the invention. FIGS. **3** and **4** were obtained by enlarging selected parts of scanned images obtained from skin regions **2** and **4** immediately after performing EXPERIMENT 1 on the hand.

[0159] In FIG. **3**, the stub of a cut hair shaft is marked by a white arrow labeled H. It may be observed that upon application of the depilatory gel without RF current heating the region of the skin region adjacent the hair shaft is substantially unaffected by exposure to the depilatory gel for seventy seconds. In contrast, in FIG. **4** the stub of a (different) cut hair shaft (also marked by a white arrow labeled H in FIG. **4**) it may be observed that after application of the depilatory gel and application of RF currents heating for seventy seconds, the region of the skin adjacent the cut hair shaft is substantially damaged as indicated by the formation of a "crater" or depression (indicated by a white arrow labeled C) surrounding the cut hair shaft. In the original color scans (not shown), the crater of damaged tissue had a red color characteristic of follicular erythema.

[0160] In later observations of skin regions treated by the combination of the depilatory gel and RF application as described in detail in EXPERIMENT 1 hereinabove it was found that the follicular erythema was present and even more pronounced in appearance.

[0161] Reference is now made to FIG. **5** which is a photomicrograph illustrating selective damage of the skin regions surrounding human hairs two days after application of a depilatory composition combined with RF heating of the skin. In FIG. **5** a stub of a cut hair shaft marked by a white arrow labeled H is shown. A crater (the boundary of which is marked by the white arrow marked C may be seen. The crater is larger and more extensive in area and the red region of follicular erythema is spread over a much larger area than the typical craters observed immediately after the treatment (such as the crater C shown in FIG. **4**.

[0162] It is noted that observations reveal that at times of about 10-15 minutes after treatment the skin regions which are not adjacent to hair shafts were substantially undamaged and showed no signs of inflammation or erythema as indicated by their normal skin color and by the absence of any visual signs of inflammation. It therefore appears that the effect of applying RF currents to depilatory composition treated skin is selectively particularly efficient in the skin region adjacent the hair shaft and/or the hair follicles.

[0163] Reference is now made to FIG. **6** which is a photograph illustrating a region of human skin (of the arm) demonstrating localized damage caused to the skin regions surrounding hair shafts after treatment of the skin with a chemical depilatory composition combined with skin heating using the application of RF currents to the skin, in accordance with an embodiment of the present invention. The photograph was taken two days after treating the photographed region of skin with a combination of a depilatory gel and application RF current as disclosed in detail in EXPERIMENT 1 hereinabove. The treated region of the skin was photographed using a Cannon digital camera Model POWERSHOT A620. The original color photographs showed that many of the hair shaft stubs were surrounded by red areas (marked by white arrows in the photograph) indicative of tissue damage and follicular erythema while the areas of skin far from the stubs were substantially devoid of visible signs of erythema or damage.

[0164] While the reasons for the selective effect observed are not presently well understood, it is possible that the selectivity may be due to the known higher RF current density in the regions near the hair shaft and hair follicle. This current density distribution is known in the art as published by Kreindel et al. in U.S. Pat. No. 6,889,090 and in U.S. published patent application number 2005/0159737 both of which are incorporated herein by reference in their entirety.

[0165] It is therefore possible that due to the higher RF current density near the hair shaft and follicular regions, these areas are selectively preferentially heated by the RF currents to a temperature that is significantly higher than the temperature of skin tissue in the regions distant from the hair shafts or the follicular region (the regions having a lower RF current densities therein). As the rate of many chemical reactions is increased by increasing the temperature (the Q_{10} value of chemical reactions typically predicts a twofold increase in reaction rate for every 10° C. increase in temperature, as is well known in the art), selective heating of the hair follicle regions may result in the acceleration of keratinolytic reactions and/or other chemical reactions of the active depilatory substance(s) in the depilatory gel or composition with the hair

shaft and/or the follicular tissues adjacent the hair shat which may lead to more extensive and/or selective damage in the hair shafts follicular regions as compared to the other skin regions.

[0166] It is noted that the parameters of RF current application used in EXPERIMENT 1 are given by way of example only and not intended to limit the parameters of RF current application of the methods and devices disclosed herein. Rather, many of the RF current parameters may be varied, depending, inter alia, on the type of skin to be treated (such as, but not limited to, facial skin, hand skin, leg skin, torso skin and the like), the physical parameters of the RF delivery device being used, the type and/or concentration of depilatory substance(s) being used, and many other considerations.

[0167] Thus, while typically the acceptable range of RF energy delivered to the skin may be between 5-25 Watt/cm^2 of skin (watt per square centimeter of skin), other different values of the delivered RF energy larger or smaller than this range may also be used depending on the application. Similarly, the RF frequency, waveshape (sinusoidal or any other usable waveforms), burst frequency, duty-cycle and the like may be varied depending on the application. For example, while the RF frequency should typically be at least 300 KHz or higher in order to prevent tissue spasms, any other usable RF frequency above spasm-initiating frequencies may be used in the methods and devices described herein. Generally, the RF current parameters and energy applied to the skin may be any combination of parameters sufficient to substantially increase the temperature of the skin (or of specific parts thereof as disclosed hereinabove) so that the chemical depilatory action proceeds faster than on non-RF heated skin, without causing any serious damage to the skin due to extensive skin tissue coagulation or skin burns.

[0168] Results of Using Different Commercial Depilatory Compositions

[0169] Additional experiments were performed using various different commercially available depilatory compositions. Similar results to the results obtained in EXPERIMENT 1 were obtained when using the RF current applicator **10** and the same experimental design and RF treatment conditions in combination with the following depilatory compositions:

1) "Veet for man" depilatory cream, commercially available from RECKITT BENCKISER UK. (Ingredients: potassium thioglycolate calcium hydroxide).

2) Facial Hair Removing Cream commercially available from BOOTS, UK Ingredient: Potassium Hydroxide

3) "BRUSH-ON FACIAL HAIR REMOVER" commercially available from Nair, UK (Ingredients: sodium hydroxide, calcium hydroxide).

The results obtained using all three of the above commercial depilatory products were very similar to those obtained in EXPERIMENT 1.

Experiment 2

[0170] The experiment was performed for testing the long term efficacy of the novel method disclosed hereinabove of treating skin by the combined application of depilatory substance and RF currents to the skin.

[0171] The experiment was performed on both legs of a male test subject having a type III skin (according to the Fitzpatrick scale). The leg hair had brown color.

[0172] The depilatory gel used and the RF current application method, were as described in detail in EXPERIMENT 1 hereinabove. Symmetrical regions on the skin of the lower part of both legs (roughly overlying the Soleus muscle) were chosen for treatment. Prior to application of the depilatory gel, the skin regions selected for the experiment were photographed using the CanoScan LiDE60 scanner as described in detail hereinabove (this set of photographs was used for determining the number of hairs before treatment). The two skin regions on the right and left leg of the test subject were covered with the depilatory gel as described hereinabove. The depilatory gel treated skin region on the right leg was further treated by application of RF currents as described in detail for EXPERIMENT 1 hereinabove using the same RF current applicator **10** (of FIG. **7**). The duration of application of RF currents was three minutes. The depilatory gel treated skin region on left leg was left undisturbed for three minutes. At the end of RF current application both legs were extensively washed with tap water to remove the depilatory gel from both legs.

[0173] Three days after the first treatment, both of the gel treated regions were again photographed using the CanoScan LiDE60 scanner as described in detail hereinabove and the photographs were used for evaluating the reduction in hair numbers at three days after the first depilatory treatment. Fifteen days after the first treatment the same regions were again were photographed using the CanoScan LiDE60 scanner as described in detail hereinabove and the photographs were used for evaluating the reduction in hair numbers at fifteen days after the first depilatory treatment.

[0174] After taking the photographs (at 15 days post the first depilatory treatment), the same regions of skin on both the left and the right legs were again subjected to a second depilatory treatment applied as disclosed in detail for the first depilatory treatment. The same left leg skin region was treated with depilatory gel only for three minutes and the same right leg skin region was treated with depilatory gel combined with RF current application for three minutes, as described for the first treatment. After the second treatment was finished, the legs were washed with tap water to remove the depilatory gel. Twenty six days after the first treatment, the same skin regions were again photographed using the CanoScan LiDE60 scanner as described in detail hereinabove and the photographs were used for evaluating the reduction in hair numbers at twenty days after the first depilatory treatment (eleven days after the second depilatory treatment).

[0175] The four sets of photographs obtained as described above were used for manually counting the number of hairs in skin areas having the approximate dimensions of 3×3 centimeters on the left and right leg photographs. The results of EXPERIMENT 2 are summarized in TABLE 1 below.

TABLE 1

Reduction after 3 days after first treatment (%)		Reduction 15 days after first treatment (%)		Reduction 26 days after first treatment (11 days after second treatment) (%)	
R	L	R	L	R	L
50.6	21.8	34.9	1.6	21.7	−1.6

[0176] The reduction in hair count in the treated skin regions is expressed in percent reduction calculated by dividing the number of hairs counted in the photographs after treatment by the number of hairs counted in the photographs taken before the depilatory treatment and multiplying by 100.

The symbols R and L in the table represent the results from the right leg and left leg, respectively. The right leg was the one treated with depilatory gel and RF current application and the left leg was treated by depilatory gel only.

[0177] The results in TABLE 1 clearly indicate that in the skin region treated by depilatory gel and RF current application (R) there is a substantial reduction in hair re-growth as compared to the region that was treated by the depilatory gel only (L). Furthermore, with repeated applications of the combined treatment (depilatory gel+RF currents), there was a further unexpected (cumulative) reduction of hair re-growth which was not observed in repeated treatment using depilatory gel only. The reasons for the unexpected observed cumulative reduction of repeated depilatory gel and RF currents applications are not currently understood.

[0178] It is noted that while in experiments 1 and 2 described above the depilatory gel was applied manually to the skin prior to the application of RF currents, other devices and systems may be implemented in which the depilatory composition or agent may be contained in or included within the RF applicator device or in the hand applicator of a system as described in detail hereinafter.

[0179] Reference is now made to FIGS. **8**-**9**. FIG. **8** is a schematic part cross-sectional diagram illustrating a device having a replaceable RF electrode assembly and a reservoir for applying a depilatory substance or composition to the skin and for applying RF energy to the depilatory substance treated skin, in accordance with an embodiment of the present invention. FIG. **9** is a schematic front view of the device illustrated in FIG. **8**.

[0180] The device **20** includes a removable RF electrode assembly **28** detachably attached to a handle **30**. The removable RF electrode assembly **28** includes six hollow RF electrodes **26**A-**26**F. The RF electrodes **26**A-**26**F are attached to an electrode block **24**. The electrode block **24** is an electrode carrying member or electrode carrying plate, preferably but not obligatorily having a disc-like shape (however, any other suitable type of shape may be used for implementing the electrode carrying members of the present application, including but not limited to, plates or discs having ellipsoidal cross-section, rectangular cross-section or any other suitable shape). The RF electrodes **26**A-**26**F have hollow passages formed therein (note that only passages **27**B and **27** E of electrodes **26**B and **26**E, respectively are shown in the cross section of FIG. **8**). The hollow RF electrodes **26**A-**26**F are made from an electrically conducting material (such as but not limited to an electrically conducting metal) or may be made from an electrically insulating material (such as, but not limited to, a polymer based material, or plastic) which is coated or plated with an electrically conducting material. The electrode block **24** may be preferably made from an electrically insulating material (such as, but not limited to, a polymer based material, a suitable engineering plastic and the like). The electrode assembly **28** may be attached to the handle **30** by a quick-release mechanism (not shown in detail) or by suitable threads formed therein (not shown), or by any other suitable attachment method or device. The entire electrode block **28** may be detached or removed from the device **20** and may be replaced with a new electrode assembly if the need arises (for example, due to clogging of one or more of the hollow passages in the RF electrodes **26**A-**26**F, or due to corrosion or deterioration of the RF electrodes **26**A-**26**B.).

[0181] The device **20** also includes a detachable reservoir **32** detachably attached to the handle **30**. When the reservoir **32** is attached to the handle **30**, the space **33** within the reservoir **32** may be partially filled with a suitable depilatory substance **34** (such as but not limited to a depilatory gel, a depilatory cream, a depilatory liquid, a depilatory foam, or the like) as described in detail hereinafter. The space **33** may also include a suitable compressed gas or a suitable propellant for pushing or propelling quantities of the depilatory substance **34** through the controllable valve **25** disposed in the handle **30**. For example, when the push button **22** attached to the handle **30** is pressed, the valve **25** opens and the propellant (not shown) in the space **33** pushes the depilatory substance through the open valve **25** and into the hollow passages **36**B and **36**E formed within the handle **30**, into the hollow passages **29**B and **29**E, respectively which are formed within the electrode block **24** and through the corresponding passages **27**B and **27**E formed within the RF electrodes **26**B and **26**E, respectively. The depilatory substance **34** finally exits through the openings **31**B and **31**E in the electrodes **26**B and **26**E, respectively to be applied to the skin (not shown). It is noted that the corresponding passages in the electrode block and in the handle **30** which are associated with the RF electrodes **26**A, **26**C, **26**D and **26**F are not seen in the cross section of FIG. **8**.

[0182] It is further noted that the electrical conductors connecting the RF electrodes **26**A-**26**F to the RF generating unit (not shown) associated with the device **20** are not shown in FIG. **8** for the sake of clarity of illustration. Such electrical conductors may be implemented as insulated electrically conducting wires disposed in the device **20** or may be implemented as films of electrically conducting material deposited or printed or coated or otherwise attached to or formed on or within the different surfaces or parts of the device **20** (such as, the electrode block **24**, the handle **30** and the reservoir **32**. Similarly, the RF current generating unit (not shown in FIG. **8** for the sake of clarity of illustration) for supplying the RF currents may be disposed outside of the device **20** (see, for example, the configuration of the system **10** of FIG. **7**) or may be a miniature RF current generating unit (not shown in FIG. **8**) which may be disposed within the device **20** or a part thereof together with a suitable power source (such as one or more batteries, or the like).

[0183] It is noted that preferably (but not obligatorily), the pushbutton **22** when activated may allow the flow of the depilatory substance **34** through the openings in the RF electrodes **26**A-**26**F and onto the skin (not shown) and may also simultaneously initiate the application of RF currents to the skin through the RF electrodes by suitably switching on the RF current generating unit connected to the device **20** or included therein.

[0184] It is noted that while in the embodiment of the device **20** (of FIG. **8**) each of the RF electrodes **26**A-**26**F has a single hollow passage formed therein, the devices of the present application also includes embodiments in which each (or some) of the RF electrodes **26**A-**26**F has two or more hollow passages (not shown in FIG. **8**) or conduits formed therein. This may be advantageous because even if one conduit in an RF electrode becomes clogged during operation of the device the remaining conduits may still function to allow the application of the depilatory substance **34** to the skin.

[0185] It is also noted that further embodiments of the device of the present application may be implemented in which only some of the RF electrodes have one or more hollow passage(s) or conduits formed therein while the remaining RF electrodes do not have any passage or conduit

formed within them. For example, the device **20** of FIG. **8** may be modified such that only the RF electrodes **26**A, **26**C and **26**E have one or more hollow passages or conduits formed therein (not shown in FIG. **8**) such that during operation of the device they may be used for applying the depilatory substance **34** onto the skin and also for delivering RF energy to the skin, while the remaining RF electrodes **26**B, **26**D and **26**F do not have any hollow passage formed therein and are used for applying RF energy to the skin and for mechanically spreading the depilatory substance applied to the skin through the RF electrodes **26**A, **26**C and **26**E.

[0186] It will be clear to the person skilled in the art that many variations and combinations of RF electrode structure may be used in the embodiments of the device of the present application and that any possible combinations and geometrical arrangements of RF electrodes selected from RF electrodes with one or more hollow passages formed therein and RF electrodes without any hollow passages formed therein may be used for implementing the skin treating devices of the present application.

[0187] Reference is now made to FIGS. **10-11**. FIG. **10** is a schematic part cross-sectional diagram illustrating a device having a refillable reservoir for applying a depilatory substance or composition to the skin and for applying RF energy to the depilatory substance treated skin, in accordance with an embodiment of the present invention. FIG. **11** is a schematic front view of the device illustrated in FIG. **10**.

[0188] The device **40** includes an RF electrode assembly **42** detachably attached to a refillable reservoir **32**A. The RF electrode assembly **42** includes six hollow RF electrodes **26**A-**26**F. The RF electrodes **26**A-**26**F are suitably attached to the electrode assembly **42**. The RF electrodes **26**A-**26**F have hollow passages passing formed therein (note that only passages **27**B and **27** E of electrodes **26**B and **26**E, respectively are shown in the cross section of FIG. **10**). The hollow RF electrodes **26**A-**26**F are constructed as described in detail hereinabove. The electrode assembly **42** may be preferably (but not obligatorily) made from an electrically insulating material (such as, but not limited to, a polymer based material, or plastic or the like), However, metal, or other suitable structural materials may also be used for forming the Electrode assembly **42**. The electrode assembly **42** may be attached to a refillable reservoir **32**A by a quick-release mechanism (not shown in detail) or by suitable threads formed therein (not shown), or by any other suitable attachment method or device.

[0189] The space **33** within the refillable reservoir **32**A may be partially filled with a suitable depilatory substance **34** (such as but not limited to a depilatory gel, a depilatory cream, a depilatory liquid, a depilatory foam, or the like) as described in detail hereinafter. The space **33** may also include a suitable compressed gas or a suitable propellant for pushing or propelling quantities of the depilatory substance **34** through the controllable valve **25** disposed in the electrode assembly **42**. For example, when the push button **22** attached to the electrode assembly **42** is pressed, the valve **25** opens and the propellant (not shown) in the space **33** pushes the depilatory substance through the open valve **25** and into the hollow passages **43**B and **43**E formed within the electrode assembly **42**, into the corresponding hollow passages **27**B and **27**E formed within the RF electrodes **26**B and **26**E, respectively. The depilatory substance **34** finally exits through the openings **31**B and **31**E in the electrodes **26**B and **26**E, respectively to be applied to the skin (not shown). It is noted that the corresponding passages in the RF electrode assembly **42** which are associated with the RF electrodes **26**A, **26**C, **26**D and **26**F are not seen in the cross section of FIG. **10**.

[0190] The reservoir **32**A has a filling passage **35** formed therein. A one way valve **35**A seals the filling passage **35**. The reservoir **32**A may be filled (or refilled) with depilatory substance **34** and/or with a suitable propellant or compressed gas, through the valve **35**A as is well known in the art. Thus, when the depilatory substance **34** runs out, the reservoir **32**A may be refilled from a re-supply canister or container (not shown) containing the depilatory substance and a propellant or pressurized gas through the valve **35**A as is well known in the art (for example, in a way similar to the way used for refilling an empty refillable lighter with liquefied butane/propane mixture).

[0191] It is further noted that the electrical conductors connecting the RF electrodes **26**A-**26**F to the RF generating unit (not shown) associated with the device **40** are not shown in FIG. **10** for the sake of clarity of illustration. Such electrical conductors may be implemented as insulated electrically conducting wires disposed in the device **40** or may be implemented as thin films of electrically conducting material (such as, for example, gold or another metal) deposited or printed or coated or otherwise attached to or formed on or within the different surfaces or parts of the device **40** (such as, the electrode assembly **42**, and the reservoir **32**). Similarly, the RF current generating unit (not shown in FIG. **10** for the sake of clarity of illustration) for supplying the RF currents may be disposed outside of the device **40** (see, for example, the configuration of the system **10** of FIG. **7**) or may be a miniature RF current generating unit (not shown in FIG. **8**) which may be disposed within the device **40** or a part thereof together with a suitable power source (such as one or more batteries, or the like).

[0192] It is noted that preferably (but not obligatorily), the pushbutton **22** when activated may allow the flow of the depilatory substance **34** from the reservoir **32**A through the openings in the RF electrodes **26**A-**26**F and onto the skin (not shown) and may also simultaneously initiate the application of RF currents to the skin through the RF electrodes by suitably switching on the RF current generating unit (not shown in FIG. **10**) or by electrically connecting the some or all of the RF electrodes **26**A-**26**F to the RF current generating unit.

[0193] It is noted that the detachable reservoirs **32** and **32**A (of FIGS. **8** and **10**, respectively) may be detached from the devices **20** and **40**, respectively, for cleaning and/or for refilling with the depilatory substance **34**. The reservoir **32**A may also be detached for filling with the depilatory substance **34** and then reattached to the RF electrode assembly **42** after which a suitable propellant or compressed gas may be introduced into the space **33** through the valve **35**A.

[0194] Reference is now made to FIGS. **12-13**. FIG. **12** is a schematic part cross-sectional diagram illustrating a device for applying RF energy to skin treated with a depilatory substance. The device has an infrared thermometer for monitoring skin temperature in accordance with an embodiment of the present invention. FIG. **13** is a schematic front view of the device illustrated in FIG. **12**.

[0195] The hand held RF current applicator **80** may form part of a desktop system (note that only the hand-held applicator **80** is shown in FIG. **12**). The applicator **80** includes a housing **82** and an RF power cable **84** attached thereto. The power cable **84** may be attached to an RF current generator

unit (not shown in FIG. **12**) such as, but not limited to the RF current generating unit **12** of FIG. **7**.

[0196] The housing **82** also includes an electrode assembly **88** with three RF electrodes **86**A, **86**B and **86**C. The housing **82** also includes an activating switch **87** attached thereto for starting and stopping the application of RF currents to the skin. The electrode assembly **88** has an open recess **90** formed therein. An infra-red (IR) optical thermometer unit **92** is disposed in the electrode assembly **88** with the IR sensor unit **94** of the IR thermometer unit **92** facing the recess **90**. When the applicator **80** is placed on the skin, the IR thermometer unit **90** may measure the temperature of the skin region adjacent the opening **90**A of the recess **90** by sensing the IR radiation emanating from the skin and/or from any depilatory substance disposed on the skin underlying the opening **90**A. The results of the temperature measurement may be used by the system including the applicator **80** to monitor the skin temperature. For example, if the skin temperature as determined by the IR thermometer unit **90** exceeds a certain threshold value, the application of RF currents to the skin may be automatically stopped in order to avoid a skin burn or undesirable coagulation or damage of skin tissues. The threshold value may be predetermined or preset by the manufacturer of the system or the device.

[0197] It will be appreciated by those skilled in the art that other embodiments including variations of the design and construction of RF current applicators capable of dispensing a depilatory agent onto the skin surface may be implemented.

[0198] For example, the depilatory substance **34** (and, if necessary the propellant) may be supplied to the skin by using a suitable pressurized disposable canister or cartridge (not shown) which may be placed for example in the space **33** of the reservoir **32** (FIG. **8**). The canister may have a valve similar to the valve **25** which may function in association with the pushbutton **22** in a similar way to the valve **25**. An advantage of replacing the fixed valve **25** with a similar valve built into the canister is that there is no need to clean the valve. Such a depilatory substance containing canister is preferably disposable and when the supply of the depilatory substance in the canister is exhausted, the entire canister (including the valve) may be disposed and replaced with another new canister.

[0199] It may also be possible to implement the devices described herein by using a suitable pump (not shown) included in the devices **20** and/or **40**. For example, the pump may be a small electrical fluid pump preferably replacing the valve **25** (of FIGS. **8** and **10**). The pump may be activated by the pushbutton **22** to pump the depilatory substance **34** from the reservoirs **32** or **32**A into the RF electrodes and onto the skin. In embodiments including such a pump, the space **33** of the reservoirs **32** and/or **32**A need not contain a propellant or compressed gas, as the pump will actively pump the fluid substance **34**. In such embodiments including a pump, the reservoir **32** (FIG. **8**) may be recharged with a depilatory substance **34** by detaching, refilling and reattaching the reservoir **32** to the handle **30** and the reservoir **32**A (FIG. **10**) may be recharged with a depilatory substance **34** by refilling the reservoir **32**A through the valve **35**A as described hereinabove.

[0200] It is noted that for systems including a hand held RF current applicator connected to a separate RF current generator unit (such as but not limited to the system **10** of FIG. **7**), the entire RF current hand applicator may be made as a disposable unit. For example, in a system in which one of the devices **20** or **40** (of FIGS. **8** and **10**, respectively) are configured as hand applicators attachable to a separate RF current generating unit (such as but not limited to the RF current generating unit **12** of FIG. **7**), the device **20** and or the device **40** may be disposable devices which are designed to be disposed off after a single use or after a certain number of uses. Since the expensive RF current generating unit of such embodiments will not included in the device **20** or **40**, it will be economical to dispose of the devices **20** and or **40** after a single use or after a certain number of uses. The implementation of such disposable hand applicators may be advantageous in cases in which multiple patients are to be treated by a system operated by a cosmetician or another user. Thus, the use of a disposable hand applicator for a single patient may reduce the risk of transferring an infecting organism (such as, for example, fungi, fungal spores, and bacteria) from one patient to another patient. Alternatively, the user may reserve a multiple use detachable RF hand applicator for use on a single patient. When another patient is to be treated, the hand applicator is detached from the RF current generating unit of the system and another different RF hand applicator is connected to the RF current generating unit for treating another patient.

[0201] In such an embodiment of the system, the replaceable hand applicator (such as the device **20** or **40**) may be easily attached and detached from the RF current generating unit of the system (such as, but not limited to the RF current generating unit **12** of FIG. **7**) by including a suitable electrical connector socket in the device **20** and/or **40** and by modifying the power cable **13** to include a suitable electrical connector (not shown) at the end of the cable **13** which is to be attached and detached to the device **20** or **40** or to any other suitable type of connectable RF current hand applicator.

[0202] It will be appreciated by those skilled in the art that the passages passing through the RF electrodes as described hereinabove for applying the depilatory composition to the skin are not obligatory and the devices shown above may be modified for applying the depilatory composition or substance through other parts of the RF applying device.

[0203] Reference is now made to FIG. **14** which is a schematic part cross-sectional diagram illustrating a device having a replaceable RF electrode assembly having a passage passing therethrough and a reservoir for applying a depilatory substance or composition to the skin and for applying RF energy to the depilatory substance treated skin. In the device **90**, the reservoir **32** is constructed as described for the device **20** of FIG. **8** and attached to a handle **92**, the space **33** and the depilatory substance **34** is disposed in the reservoir **32** and propelled by a propellant or compressed gas disposed in the space **33** as described for the device **20** hereinabove. The handle **92** has a hollow passage **93** formed therethrough. A controllable valve **25** is disposed in passage **93** for controlling the flow of the depilatory substance **34** into the passage **93**. The valve **25** is controlled by the pushbutton **22** as described for the devices **20** and **40** hereinabove. A detachable RF electrode assembly **98** is detachably attached to the handle **92**. The RF electrode assembly **98** includes an electrode block **94** and a plurality of RF electrodes (including but not limited to the RF electrodes **96**A and **96**B shown in the cross sectional view of FIG. **14**)) attached to the electrode block **94**. It is noted that while only two RF electrodes **96**A and **96**B are shown in the cross-sectional view of FIG. **14**, the device **90** may have any desired number of RF electrodes (typically, two or more electrodes). The electrode block **94** has a hollow passage **95** formed therein.

[0204] The passage **95** has an opening **95**A at the surface **94**A of the Electrode block **94**. When the RF Electrode assembly **98** is attached to the handle **92**, the hollow passage **95** is contiguous with the hollow passage **93**. In operation, when the pushbutton **22** is pressed, the valve **25** is opened and the depilatory substance **34** is pushed by the propellant or compressed gas disposed in the space **33**. A quantity of the depilatory substance **34** may then flow through the valve **25**, the passage **93** and the passage **95**, and exit from the opening **95**A to be deposited on the skin (not shown). The pressing of the pushbutton **22** may also initiate the application of RF currents to the skin by the RF electrodes (including but not limited to the RF electrodes **96**A and **96**B of FIG. **14**).

[0205] It will be appreciated by those skilled in the art that the specific methods and configurations for applying a depilatory composition illustrated disclosed hereinabove and illustrated in the drawings are not intended as limiting the design of the RF energy application device. Many variations and modifications for applying a flowable substance from a reservoir to the skin are possible as is known in the art, all of which may be implemented by those skilled in the art without undue experimentation, and are intended to be included within the scope of the invention. For example, while the device **90** of FIG. **14** has only one passage **93** formed within the handle **92**, only one passage **95** formed within the electrode block **94** and a single opening **95**A opening on the surface **94**A of the electrode block **94**, this is not obligatory and any desired number and configuration of such passages and openings may be used in implementing of the device **90** (or any other of the devices disclosed in the present application). For example, any desired number of passages (with or without associate valve(s)) may be formed within the handle **92**, and any number of passages and openings thereof may be formed in the electrode block **24** of the device **90**. Such exemplary embodiments may include but are not limited to, an embodiment having three (or any other number) passages formed in the handle **92** and three passages formed in the electrode block **24** and opening in three corresponding openings on the surface **94**A.

[0206] In another possible embodiment, the handle **92** may have a single valve **25** and a single passage **93** formed therein (as shown in FIG. **8**) while the electrode block **94** has three hollow passages (not shown in FIG. **8**) obliquely arranged in the electrode block **94** such that they all open opposite the single passage **93** disposed in the end of the electrode block **94** facing the handle **92** while their other openings on the surface **94**A of the electrode block **94** are disposed at different separate positions on the surface **94**A. Such embodiments may have the benefit that if one or more of the multiple openings or the multiple passages formed in the electrode block **24** is clogged, the depilatory substance **34** may still be applied to the skin through the remaining passages and openings that are not clogged.

[0207] It is noted that while the devices illustrated in FIGS. **7-14** have fixed RF electrodes and the devices are manually moved on the surface of the skin to assist in the spreading of the depilatory substance and to obtain amore even distribution of the RF energy in the skin, this is not obligatory and other embodiments of the device may be implemented using movable electrodes and movable electrode assemblies.

[0208] Reference is now made to FIGS. **15** and **16**. FIG. **15** is a schematic part cross-sectional part isometric side view illustrating a device having a hand operated pumping dispenser for dispensing depilatory substance and a motorized movable RF electrode assembly, in accordance with an embodiment of the skin treating devices of the present application. FIG. **16** is a schematic side view illustrating the motorized RF electrode assembly of the device of FIG. **15**.

[0209] The device **100** includes a dispensing unit **110** and a housing **120** attached to the dispensing unit **100**. An RF electrode assembly **130** is attached to the housing **120**. The RF electrode assembly includes a motor **122**. The motor **122** is preferably an electrical motor, but any other suitable types of motors may also be used in implementing the device **100**. The motor **122** receives electrical power from a suitable power supply (not shown in FIG. **15**) through suitable electrically conducting wires (not shown in FIG. **15** for the sake of clarity of illustration) The motor **122** has a rotatable shaft **125**. The shaft **125** has a first shaft portion **125**A and a second shaft portion **125**B. The first shaft portion is proximal to the motor **122**. The second shaft portion **125**B is distal to the motor and is bent at an angle to the first shaft portion **125**A. When the motor **122** is operating, the shaft **125** rotates and the end of the second shaft portion together with an RF electrode carrying member **140** movably attached thereto rotate in a circular pattern.

[0210] The RF electrode carrying member **140** is formed as a generally disc-like plate or block, preferably made of an electrically insulating material (such as but not limited to, a suitable polymer based material, an engineering plastic, polycarbonate, polypropylene, and the like). Electrically conducting RF electrodes **150**A-**150**D are attached to the RF electrode carrying member **140** (It is noted that only RF electrodes **150**A and **150** B are shown in the part cross sectional view of FIG. **15** for the sake of clarity of illustration, however, see the isometric view of FIG. **16** for a view of all the RF electrodes **150**A-**150**D). The RF electrode carrying member **140** has a (preferably conic) depression **160** formed therein and the second portion **125**B of the motor shaft **125** is movably disposed within the depression **160**. When the shaft **125** rotates, the RF electrode carrying member **140** is rotatably moved by the second portion **125**B engaged in the depression **160**, while allowing the RF electrode carrying member **140** to move at an angle with respect to the second portion **125**B, allowing the RF electrode carrying member **140** to follow and accommodate the contours of the treated skin (not shown).

[0211] The RF electrodes **150**A-**150**D may be any suitable type of RF electrodes as described hereinabove and as is known in the art. The RF electrodes **150**A-**150**D are electrically connected to four electrically conducting springs **154**A-**154**B, respectively, through electrically conducting holding tabs **152**A-**152**D, respectively. Each RF electrode of the RF electrodes **150**A-**150**D is thus electrically coupled to a different spring of the springs **154**A-**154**D through one of the holding tabs **152**A-**152**D. The holding tabs **152**A-**152**D are preferably made from an electrically conducting material, such as a metal or any other strong electrically conducting material and each tab is electrically coupled to a different RF electrode of the RF electrodes **150**A-**150**D. The springs **154**A-**154**D are preferably made of an electrically conducting metal (such as but not limited to stainless steel and the like). The tabs **152**A-**152**D have holes **156**A-**156**D, respectively, formed therein for attaching the springs **150**A-**150**D, respectively (it is noted that only the holes **156**C and **156**A are seen in the isometric side view of FIG. **16**).

[0212] A first end of each spring of the springs **150**A-**150**D is movably attached to one tab of the tabs **152**A-**152**D, respectively, through the hole formed in each tab. The second end of each of the springs **150**A-**150**D passes through a base plate **170** of the motorized RF electrode assembly **130** (to which the motor **122** is attached by motor supporting members **127**A and **127**B) and is electrically connected to a corresponding

electrical connector of four electrical connectors **158**A-**158**B, respectively (it is noted that only the electrical connectors **158**A, **158**B and **158**C out of the four electrical connectors **158**A-**158**D are shown in the isometric side view of FIG. **16**). The RF electrodes **150**A-**150**D are suitably electrically connected to an RF energy source (not shown in FIGS. **15-16**) by using suitable electrically conducting wires (not shown) electrically connected from the RF energy source to the electrical connectors **158**A-**158**D (it is noted that the electrically conducting wires connecting the RF energy source to the electrical connectors **158**A-**158**D are not shown in FIGS. **15-16** for the sake of clarity of illustration).

[0213] The four springs **150**A-**150**D hold the RF electrode carrying member **140** under tension for stabilizing it and allow the RF electrode carrying member **140** to flexibly move in the directions represented by the double headed arrows **172**A and **172**B for following the contours of the treated skin during operation.

[0214] The RF electrode carrying member **140** has a hollow passage **174** passing therethrough. A first end of a flexible depilatory substance supplying conduit **176** (such as, for example, a flexible hollow tube) is disposed within the passage **174** to allow the dispensing of the depilatory substance **34** from the dispensing unit **110** onto the skin. The other end of the conduit **176** is fluidically coupled to the dispensing unit **110** to allow the flow of the depilatory substance **34** from the dispensing unit **110** through the conduit **176** disposed in the passage **174** so that the depilatory substance **34** may exit from the opening of the conduit **176** and reach the surface of the treated skin. When the motor **122** is operating, the rotatory movement of the RF electrode carrying member **140** assists in spreading the depilatory substance **34** extruded from the conduit **176** on the treated skin surface

[0215] The dispensing unit **110** includes a manual pumping mechanism **116** and a reservoir **112** detachably attached to the pumping mechanism **116**. The reservoir **112** has a space **114** therein which may be filled with the depilatory substance **34**. A tube **118** is fluidically connected to the pumping mechanism **116** and extends into the reservoir **112**. The pumping mechanism **116** includes a pumping handle **124**. The conduit **176** is fluidically sealingly attached to an opening disposed at the end of the pumping member **124**.

[0216] When the pumping handle **124** is manually activated (by pushing the pumping handle **124**) by the user of the device **100**, the depilatory substance is pumped through the tube **118** and passes through the pump **116** and the conduit **176** and is dispensed onto the skin through the open end of the conduit **176** distal from the pump **116**.

[0217] It is noted that the structure and operation of hand operated pumped substance dispensers are well known in the art, are not the subject matter of the present application and are therefore not shown in detail hereinafter. For example, many types of such dispensers are commercially available for dispensing liquid soap, cosmetic creams, perfumes and the like.

[0218] The device **100** also includes a stabilizing member **180** detachably attached to the housing **120**. The stabilizing member **180** is a crown-like member, preferably (but not obligatorily) made from plastic or a suitable polymer based material (such as, but not limited to polycarbonate, polypropylene and the like). The stabilizing member has a first portion **180**E detachably attached to the housing **120**. The stabilizing member also has a second portion comprising four spaced apart skin contacting members **180**A-**180**D (It is noted that only three of the skin contacting members **180**A, **180**B and **180**D are seen in the cross-sectional view of FIG. **15**).

[0219] In operation, the device **100** is pressed against the skin such that at least some (and, preferably, all) of the skin contacting members **180**A-**180**D are in firm contact with the skin. The user than activates the motor **122** to rotate the RF electrode carrying member **140** as disclosed hereinabove. The skin contacting members **180**A-**180**D of the stabilizing member **180** stabilize the position of the device **100** on the skin by preventing or reducing any movements which, in the absence of the stabilizing member **180**, may have been caused by the rotational movements of the RF electrode carrying member **140** pushes against the skin. When the stabilizing member **180** is attached to the device **100** such movements are advantageously prevented or significantly reduced.

[0220] It is noted that while the stabilizing member **180** of the device **100** is attached to the housing **120**, the device **100** may also be modified such that the stabilizing member **180** is attached to the RF electrode assembly **130**.

[0221] It is further noted that while the stabilizing member **180** is implemented as a crown-like structure having four spaced apart skin contacting members **180**A-**180**D, other embodiments of the device may be implemented in which the shape, size, and number of skin contacting members may be modified. For example stabilizing members having two, three, five, six or any number greater than six of skin contacting members may also be used.

[0222] The stabilizing member **180** may be detached from the housing **120** for cleaning purposes. Additionally, removing the stabilizing member **180** may be useful for treating the skin of certain body regions, such as but not limited to the "bikini line" area in the crotch region, the arm pits and the like, which may be more amenable to treatment with the stabilizing member **180** removed from the device **100**.

[0223] Reference is now made to FIGS. **17-19**. FIG. **17** is a schematic exploded isometric view of a skin treatment device having a stabilizing member and a flexible RF electrode assembly protecting sleeve member, in accordance with an embodiment of the skin treating devices of the present application. FIG. **18** is a schematic isometric view illustrating the skin treatment device of FIG. **18** without the stabilizing member and the flexible electrode assembly protecting sleeve. FIG. **19** is a schematic cross-sectional diagram illustrating in detail the motorized movable RF electrode assembly of the skin treatment device of FIG. **18**.

[0224] The device **200** is a hand held device having a housing **202**. The housing **202** may be made from a plastic material or polymer based material such as but not limited to polycarbonate, polypropylene and the like but other suitable materials may also be used. The device **200** also includes the stabilizing member **180** as described in detail hereinabove. The stabilizing member **180** has a first portion **180**E which is detachably attached to the housing **202** of the device **200** (the Stabilizing member **180** is shown as detached from the housing **202** in the exploded view of FIG. **17**) The stabilizing member **180** also has a second portion comprising four space apart skin contacting members **180**A-**180**D as disclosed hereinabove. The device **200** also includes a movable motorized RF electrode assembly **230** attached to the housing **202**.

[0225] Turning to FIG. **19**, the RF electrode assembly **230** includes a base plate **270** to which a motor **122** is attached. The motor has a rotating shaft **225**. A coupling member **226** is attached to the shaft **225**. A second shaft **228** is attached at one shaft end **228**A to the coupling member **226** and at another shaft end **228**B to an RF electrode carrying member **240**. The RF electrode carrying member **240** has a generally spherically shaped socket **240**A formed therein. The second end **228**B of the second shaft **228** has a generally spherically shaped member **228**C formed at its end. The spherically

shaped member **228**C is movably disposed within the socket **240**A to form a "ball and socket" joint allowing the RF electrode carrying member **240** to move at various different angles to the longitudinal axis of the shaft **228** to allow the RF electrode carrying member **240** to accommodate for the contours of the skin during operation of the device **200**.

[0226] The RF electrode carrying member **240** includes four RF electrodes **150**A-**150**D attached thereto. The RF electrodes **150**A-**150**D are constructed and operative as disclosed hereinabove for the device **100** (of FIG. **15-16**). It is noted that suitable insulated electrically conducting wires (not shown in FIGS. **17-19** for the sake of clarity of illustration) are connected to the RF electrodes **150**A-**150**D through four electrical connectors **154**A-**154**D (it is noted that only the electrical connectors **154**B and **154**C are shown in the cross-sectional view of FIG. **19**) for energizing the RF electrodes **150**A-**150**D.

[0227] The RF electrode carrying member **240** has a hollow passage **240**B passing therethrough. A temperature sensor **250** is attached within the passage **240**B and protrudes beyond the surface **240**C of the RF electrode carrying member **240**. In operation of the device **200**, the temperature sensor **250** contacts the skin and/or the depilatory substance **34** applied to the skin and senses the temperature of the skin and/or the depilatory substance **34**. Preferably, the sensor **250** is a small thermistor having a low thermal mass. However, any other suitable type of temperature sensor known in the art may also be used for implementing the temperature sensor **250**. The output signal of the sensor **250** is carried by a sensor wire **251** (only part of the sensor wire is shown in FIG. **19**, for the sake of clarity of illustration). The sensor wire **251** as well as the electrically conducting wires for energizing the RF electrodes (not Shown) pass through open passages **243** formed in the base plate **270**, and may exit the housing **202** through a suitable cable **210** ending in a suitable electrical connector **212**. The Electrical connector **212** may be used to connect the device **200** to an external RF power source (not shown in FIGS. **17-19** but may be similar to the RF current generating unit **12** of FIG. **7** modified to include a DC power supply) and/or to a suitable power source (not shown) for energizing the motor **122** (such as, but not limited to, a DC power source).

[0228] The RF electrode assembly **230** includes a flexible sleeve-like member **205** having a first end **205**A and a second end **205**B (see FIG. **17**). The sleeve-like member **205** may be made of any suitable elastic or flexible material, such as but not limited to rubber, synthetic rubber, a flexible or elastic polymer based material and the like, but any other suitable materials may also be used. The sleeve-like member **205** is preferable shaped to have a folded, bellows-like shape or a concertina-like shape or an accordion-like shape to increase it's flexibility.

[0229] The RF electrode carrying member **240** has a circumferential slot **241** formed therein for attaching the first end **205** of the sleeve-like member **205** therein. The base plate **270** has a circular slot **271** formed therein for attaching the second end **205**B of the sleeve-like member **205** therein.

[0230] Preferably, the ends **205**A and **205**B of the sleeve-like member **205** are sealingly attached to the slots **241** and **271**, respectively. The sleeve-like member **205** functions to flexibly stabilize the RF electrode carrying member **240** such that when the RF electrode carrying member **240** is rotated at an angle to the shaft **228** while following the contours of the skin, the force exerted by the flexible (elastic) sleeve like member **205** will act as a returning force which will re-align (straighten) the RF electrode carrying member **240** once the device is lifted off the skin surface. Another function of the sleeve-like member **205** is protecting the inner components of the RF electrode assembly **240** from being contaminated and clogged by the depilatory substance **34** dispensed on the skin.

[0231] In operation, the user applies a depilatory substance or a depilatory composition, such as a depilatory cream to the skin. The application may be made manually (by the fingers) or by using any suitable applicator and/or container and/or dispensing device known in the art and containing the depilatory substance or composition. After the depilatory composition has been applied to the skin, the device **200** may be pressed against the skin such that the RF electrodes **150**A-**150**D are in contact with the depilatory treated surface of the skin. The user may then press the activator button **204** on the device **200** to energize the motor **122** for starting the rotating action of the RF electrode carrying member **240** and for energizing the RF electrodes **150**A-**150**D. The rotating action of the RF electrode carrying member **240** assists in spreading the depilatory substance on the treated skin region and the application of the RF energy to the depilatory substance treated skin heats the skin and the depilatory substance to achieve a highly efficient depilation of skin hair as described in detail in the various different experiment disclosed in the present application.

[0232] It is noted that while the temperature sensor **250** (of FIG. **19**) is disposed in the device **200** to sense the temperature of the skin (and/or of the depilatory substance adhering to the skin), it is possible in accordance with another embodiment of the devices described in the present application to include in the device one or more temperature sensors attached to or disposed within one or more of the RF electrodes of the device (such as, but not limited to, the RF electrodes **150**A-**150**D of the device **200**). It may also be possible to use a combination of temperature sensors for determining both the temperature of one or more RF electrodes and the temperature of the skin (and/or the depilatory substance applied to the skin).

[0233] Reference is now made to FIG. **21** is a schematic cross-sectional diagram illustrating part of a skin treating device having a disposable depilatory substance reservoir, in accordance with an embodiment of the skin treating devices of the present application.

[0234] The device **300** includes a openable housing **302**, a motorized RF electrode assembly **330** and a depilatory substance dispensing unit **310**. The housing **302** has a housing body **302**A and an openable cover **302**B. The openable cover **302**B includes a pressure exerting mechanism **320** for exerting pressure on a squeezable elastic reservoir **328** disposed in the housing body **302**A. The pressure exerting mechanism **320** includes a compartment **315** formed within the housing body **302**A and defined by a printed circuit board (PCB) **322** disposed in the housing body **302**A and a pressure plate **324** which is spring loaded by a leaf spring **326**. The leaf spring **326** and the pressure plate **324** are movable attached within the openable cover **302**B. The printed circuit board **322** may include various electronic components for energizing the RF electrodes of the RF electrode assembly **330**, for controlling the operation of the motorized RF electrode assembly and for receiving and/or processing signals from any temperature sensors included in the device **300**.

[0235] The cover **302**B is openably attached to the housing body **302**A by a hinge **303** such that it may be opened and closed by moving it in the directions represented by the double headed arrow **301**. After closing the cover **302**B, the cover **302**B may be locked in place by a suitable openable latch or clamping mechanism (the latch is not shown in FIG. **21** for the sake of clarity of illustration).

[0236] The depilatory substance dispensing unit **310** includes a squeezable (elastic) reservoir **328** including a depilatory substance **34** therein. The reservoir **328** is preferably an elongated pouch (or bag, or sachet) made from a strong thin pliable material (such as, but not limited to polyethylene or any other suitable plastic or polymer based material). However, other suitable pliable or flexible materials known in the art may also be used in making the squeezable reservoir **328**. The dispensing unit **310** includes a hollow flexible dispensing tube **328**A attached to the reservoir **328** or formed as a contiguous part thereof.

[0237] The RF electrode assembly **330** includes an electrical motor **122** attached to a base plate **370**. A coupling member **326** is attached to the shaft **327** of the motor **122** and a second shaft **328** is eccentrically attached to the coupling member **326**. The second shaft **328** and is movably attached to an RF electrode carrying member **340**. The RF electrode carrying member **340** has four RF electrodes **150**A-**150**D attached thereto, as disclosed in detail hereinabove for the RF electrode carrying member **240** of the Device **200** (it is noted that only two of the RF electrodes **150**B and **150**C are shown in the cross-sectional view of FIG. **21**). The RF electrode carrying member **340** has a sensor passage **345** formed therein for attaching a temperature sensor therein as disclosed in detail hereinabove for the device **200** (the sensor and sensor wire are not shown in FIG. **21** for the sake of clarity of illustration).

[0238] RF electrode carrying member **340** has a second passage **343** formed therein for attaching an end of a hollow guiding member **325** included in the RF electrode assembly **330**. The guiding member **325** has a first open end **325**A attached within the part of the compartment **315** proximal to the RF electrode assembly **330** and a second open end **325**B which is attached within the second passage **343** formed in the RF electrode carrying member **340**.

[0239] The guiding member **325** is shaped as a flexible hollow tube having a lumen open on both sides **325**A and **325**B. The guiding member **325** passes through an opening **347** formed in the base plate **370** and allows free rotation of the eccentrically attached RF electrode carrying member **340** when the motor **122** is energized.

[0240] To operate the device **300**, the user opens the openable cover **302**B to allow access to the compartment **315**. The user inserts the squeezable reservoir **328** filled with the depilatory substance **34** into the compartment **315** and inserts the flexible dispensing hollow tube **328**A into the opening at the end **325**A of the hollow guiding member **325**. The user pushes the dispensing hollow tube **328**A into the guiding member **325** until the end of the dispensing hollow tube **328**A reaches the open end **325**B of the guiding member **325** and is in a suitable position to dispense depilatory substance **34** onto the skin. The user then closes the cover **302**B.

[0241] When the cover **302**B is closed an end **360**B of a spring loaded flow regulating lever **360** is pushed against the wall of the guiding member **325** to constrict and close the lumen of the guiding member **325** closing also the part of the dispensing hollow tube **328**A which is disposed within the constricted part of the guiding member **325**, thus preventing the passage of any of the depilatory substance **34** through the dispensing tube **328**A. The spring loaded lever **360** is attached to a spring **364** which is also attached to the wall of the cover **302**B. The spring **364** holds the lever **360** in a position of applying pressure on and constricting the lumen of the guiding member **325** until manual pressure is applied to the end **325**A of the flow regulating lever **325** by the user resulting in the opening of the constricted lumen of the guiding member **325** and allowing flow of the depilatory substance **34** through the hollow flexible dispensing tube **328**A of the squeezable reservoir **328**.

[0242] When the cover **302**B is closed the pressure plate **324** applies pressure on the squeezable reservoir **328** which is squeezed between the fixed printed circuit board **322** and the pressure plate **324** by the forces of the leaf spring **326**. Thus, after closing and latching the cover **302**B, the depilatory substance **34** in the squeezable reservoir **328** is constantly under pressure but is prevented from flowing through the flexible dispensing hollow tube **328**A because of the constricting action of the flow regulating lever **360**. When the user presses the end **360**A of the flow regulating lever **360** towards the cover **302**B, the lever **325** relaxes the constriction of the lumen of the guiding member **325** and the depilatory substance **34** flows from the squeezable reservoir **328** through the flexible dispensing hollow tube **328**A and is dispensed onto the surface of the skin adjacent the opening **343** in the RF electrode carrying member **340**.

[0243] The device **300** also includes a stabilizing member **380** operative as explained hereinabove for the stabilizing member **180** of FIG. **17**.

[0244] The device **300** also includes the flexible sleeve-like member **205** as disclosed hereinabove and illustrated in FIG. **17**. However, to preserve clarity of illustration, the flexible sleeve-like member **205** of the device **300** is not shown in the cross-sectional view of FIG. **21**. The end **205**B (see FIG. **17**) of the flexible sleeve-like member **205** is sealingly attached to the base plate **370** and the end **205**A of the flexible sleeve-like member **205** is sealingly attached to the circumferential slot **341** of the RF electrode carrying member **340**.

[0245] The printed circuit board **322** has an electrical connector **367** which allows electrical connecting of components of the printed circuit board **322** through a mating connector **369** and a cable **390** to any System components disposed outside the device **300**. For example, in accordance with one embodiment of the device **300**, an external RF energy source (not shown) and an external the DC power source (not shown) may be connected to the device **300** through the cable **390** for providing energy to the RF electrodes **150**A-**150**D and for providing DC current to the motor **122**, respectively.

[0246] In accordance with another embodiment of the device **300**, the RF energy circuitry may be included in the printed circuit board **322**, and the cable **390** may supply DC power from an external power supply (not shown) for operating the RF current generating circuitry (not shown in detail) of the printed circuit board **322** and the motor **122**.

[0247] In accordance with yet another embodiment of the device, all the electronic circuitry for the RF energy source, the motor controlling circuitry, and the circuitry for receiving and processing the signals of the temperature sensor(s) included in the device may be included in the printed circuit board **322**. In such a case, an internal power source (not shown in FIG. **21**), such as one or more battery, electrochemical cell, rechargeable cell, fuel cell or any other type of electrical energy source known in the art may be internally disposed within the housing **302** of the device **300** (in such a case, the optional connector **367** and the optional cable **390** are redundant and are not included in the device).

[0248] When the inventors of the present application first conceived the idea of using the combination of application of heat and depilatory substance for hair removal, they initially tried to apply heat to a depilatory substance treated skin. However, surprisingly, the results of simply applying a non-RF type heating device to skin which has been treated with a depilatory substance were problematic and were qualitatively

and quantitatively different than the results obtained later by using an RF energy source for treating the skin.

Experiment 3

[0249] In the first part of this experiment a small area of approximately 16 square centimeters on the outer thigh of the right leg of a male subject was treated with VEET® Sensitive Formula Hair Removal Lotion (commercially available from RECKITT BENCKISER, UK) and then heated for 1 minute to a temperature of approximately 40° C. degrees centigrade for the duration of the treatment by applying a Deep Heat Massager Model DH68-L (commercially available from Kolvin Industries Ltd., Hong Kong, China) to the depilatory gel treated region. The skin temperature was monitored during the treatment by using a PRECISE Model ST652 infra-red thermometer. After the heat treatment, the treated skin area was visually observed to be injured. The treated skin region was undesirably affected by the treatment, and the treated skin region showed bruises which led to the peeling of the skin and bleeding from the bruised treated skin region.

[0250] The second part of the experiment was then performed on a similarly sized skin region outer thigh of the left leg of the same male subject using the same depilatory substance (VEET® Sensitive Formula Hair Removal Lotion) but with the heating performed using the same hand held RF device described in EXPERIMENT 1 at a power rate of approximately 6.7 watt for one minute. The skin temperature was monitored during the RF treatment by using the same PRECISE Model ST652 infra-red thermometer as disclosed hereinabove for the first part of the experiment, and was determined to be about 40° C. for the duration of the RF treatment. In contrast to the skin damage observed in the first part of the experiment, the skin region treated with the RF device was not injured and selective hair removal was observed especially near the hair shafts and the hair follicle regions. No bruises or significant skin damage or skin peeling or bleeding were observed in the RF heated depilatory treated skin region on.

[0251] Upon further observation (under magnification) of the skin region treated by the combination of depilatory substance application and RF energy application it was unexpectedly and surprisingly observed that the main effects of the depilatory composition were selectively affecting the vicinity of the hair shafts and hair follicles, with almost no visibly discernible effect on other skin. Thus, apparently, applying RF energy to the skin may preferentially (or selectively) heat at least the skin tissues in the vicinity of hair shafts of the skin and the hair shafts to selectively increase the effect of the depilatory substance on the skin tissues and on the hair shafts.

[0252] Applying RF energy to the skin may therefore selectively heat skin tissues in the vicinity of the hair shafts of the skin to selectively increase the effect of the depilatory substance on those skin tissues close or adjacent to the hair shafts.

[0253] While the reasons for this unexpected and surprising selective effects of RF heating in combination with the depilatory substance, as compared to the application of non-RF caused heating of a depilatory substance treated skin are not presently clearly understood, it may be possible that this effect results from an effect similar (though not necessarily identical) to the selective heat propagation along hair shafts during RF induced heating of hair shafts cut by a hot wire cutting element as described in Published International Patent Application, International Publication Number WO 2007/088541 to Azar et al., incorporated herein by reference in its entirety.

[0254] Further experiments were performed to quantitative assess the differences between hair removal achieved by regular shaving of the skin and hair removal achieved by the method of combining applying of a depilatory substance and RF energy application to the skin.

Experiment 4

[0255] The right and left legs of an adult male subject were used for comparing the effects of regular shaving (prior art) to the effects of the depilatory treatment combined with application of RF energy of the present application. Two small skin regions (each having an area of approximately four square centimeters) positioned similarly on the outer thigh of each of the right and left leg of the subject were used as test regions in the experiment.

[0256] The first test region on the right leg was treated by applying VEET® Sensitive Formula Hair Removal Lotion (commercially available from RECKITT BENCKISER, UK) to the tested skin region and using the RF device described in detail in EXPERIMENT 1 hereinabove to apply RF energy to the skin for one minute at a power rate of about 6.7 watt, as disclosed in detail in EXPERIMENT 1 hereinabove.

[0257] The second test region on the left leg was treated by shaving the test region using a model Gillette Blue II EXCEL shaving razor, commercially available from Gillette a unit of Procter & Gamble, USA. (using a shaving cream commercially available from Gillette, a unit of Procter & Gamble, USA.)

[0258] The treated skin regions were then rinsed with tap water to remove the depilatory substance and the shaving gel, dried, and then evaluated with a Visiometer system for measurement of various skin properties and parameters (Skin Visiometer, model SV 600 FireWire, commercially available from CK electronic GmbH, Germany (Courage & Khazaka, Cologne, Germany).

[0259] The following skin parameters were evaluated: Surface, Volume, Ser, SEsc and Sew (the definitions of these parameters, as defined by the manufacturer of the Visiometer System, are provided hereinafter. The results of the measured skin parameters for the two different test regions are summarized in TABLE 2.

TABLE 2

	Surface	Volume	SEr	SEsc	SEw
RF energy + Depilatory (Right leg)	415	37	6.27	0.67	125.9
Shaving (Left Leg)	492.1	72	8.99	1.18	212.2

[0260] The following text (placed between quotation marks) was copied from the user manual of the Skin-Visiometer SV 600 FireWire instrument, copied from the user manual supplied with the Visiometer device and labeled (sv600 English FireWire 03/2006 DK), and includes the manufacturers definitions of the terms used in measurements performed:

"Acronyms and Abbreviations

Surface (Measurements on the Skin Surface)

[0261] Calculates the size of the "wavy" surface in comparison to the stretched ("ironed") surface (x:1). The smoother the area was before stretching it, the closer the two

values are together. The result is displayed in the result window "Surface" in % (e.g. 113=the stretched area is 13% larger than the original surface).

Volume

[0262] Volume calculates the virtual amount of liquid needed in the calculation area to fill the image until the average height of all mountains. The smoother an area before filling up, the less virtual liquid is needed. The result is shown in the result window in the field "Volume" in mm^3.

SELS Parameters

[0263] The SELS calculations (Surface Evaluation of Living Skin) consists of following parameters:

Sesc Scaliness Calculates the Portion of Bright Pixels

[0264] Number of pixels where the gray level is higher than the threshold of SEsc.

[0265] The smaller SEsc, the less desquamation on the stratum corneum, this corresponds with higher skin moisture.

SEr Roughness Calculates the Portion of Dark Pixels.

[0266] SEr and SEw are depending on the number and width of the wrinkles.

[0267] SEr is the roughness parameter and calculates the gray levels above the threshold in comparison to the whole image.

[0268] The smaller this value, the less rough the skin.

SEw Wrinkles Proportional to Number and Width of the Wrinkles

[0269] The smaller this value, the less wrinkles measured on the skin."

[0270] It is noted that the results summarized in TABLE 2 indicate that all the determined skin parameters including: Surface, Volume, SEr (representing the skin Roughness), SEsc (representing the skin's scaliness) and SEw (representing a quantitative measure of the skin wrinkles) showed significantly lower values in the test region treated with RF energy application and depilatory treatment, as compared to the respective scores of the razor shaved tested skin region. This indicates that the first test region (RF+Depilatory treatment) exhibited a significantly enhanced smoothness, reduced roughness, reduced wrinkles, reduced desquamation as compared to the razor shaved skin region.

[0271] In addition to the comparison of the measured skin parameters of two differently treated skin regions using the VISIOMETER system as described hereinabove, the tested regions were photographed and visually inspected. Reference is now made to FIGS. **21** and **22** are photographs illustrating differences in appearance of human skin after two different skin treatment methods were applied to the skin. FIG. **21** is a microphotograph of part of the first test region (RF energy+ Depilatory treatment) and FIG. **22** is a photomicrograph of part of the second test region (razor shaved region).

[0272] As may be seen in FIGS. **21-22**, the skin appears smoother on the region of the first test region (illustrated in FIG. **21**). Additionally the hair stubs seen on FIG. **21** (RF energy+Depilatory treatment) are shorter than those seen in FIG. **22** (Razor Shaved region). As may be seen in FIG. **21**, the hair stubs where actually removed to a level below the surface of the skin and are actually disposed within the shaft canal of the hair follicles below the surface of the skin. This is in direct contrast to the hair stubs remaining in the razor shaved test region which are clearly seen in FIG. **22** to protrude as short stubs above the surface of the skin.

[0273] Reference is now made to FIG. **23** which is a schematic flow diagram illustrating the steps of a method of hair removal and/or skin treatment combining the application of a depilatory composition to the skin with the application of RF currents to the treated skin region.

[0274] In accordance with an embodiment, the method includes applying a depilatory substance (or a depilatory composition) to the skin (step **50**). The application of the depilatory composition or agent or substance may be performed manually as described hereinabove or by using any type of applicator device known in the art, such as but not limited to a, brush, a pad, a spray canister, a squizable container, a pressurized container or any other device known in the art for applying a cream or fluid or gel or solution to the skin.

[0275] In accordance with another embodiment of the method, the application of the depilatory substance may also be done automatically by dispensing the depilatory substance from an RF applicator as described in detail hereinabove for the different embodiments of the devices **20** and **40**.

[0276] In one embodiment, the depilatory cream or composition comprises a thiol component. In another embodiment, the cream or composition comprises a hydroxide component, a thiol component, and a ceteareth component. In another embodiment, the depilatory composition comprises water, a lubricant, a hydroxide component, a thiol component, a ceteareth component, a moisturizer, an aloe component and a fragrance. The lubricant may comprise a mineral oil. The hydroxide component includes at least one of a metal hydroxide, a sodium hydroxide, a calcium hydroxide. The thiol component comprises at least one of a metal thioglycolate, a calcium thioglycolate, a sodium thioglycolate and a potassium thioglycolate. The ceteareth component comprises at least one of a cetearylalcohol and a ceteareth-20. The moisturizer may comprise lanolin. The aloe component may comprise at least one of an aloe juice, an aloe extract and an aloe vera gel.

[0277] In another embodiment, the depilatory composition comprises water, a mineral oil, a calcium hydroxide, a cetearylalcohol, a calcium thioglycolate, a sodium thioglycolate, a ceteareth-20, a lanolin, and an aloe juice and a fragrance. The proportions of the ingredients are similar to that of NAIR®, a hair removal product sold by Carter-Wallace, Inc. In another preferred embodiment, the composition is NAIR®.

[0278] In another embodiment, the composition further comprises sodium silicate, a stearyl alcohol, a squalane, a tocopheryl acetate (vitamin E), an avocado oil, a jojoba oil, a bisabol, a sodium lauryl sulfate, a urea, and an iron oxide. The depilatory composition may also include ingredients such as mineral oils and plant extracts.

[0279] In one embodiment, the depilatory agent is a compound capable of removing or destroying hair, such as a compound capable of reacting with disulfide bonds of keratin. Examples of such depilatory agents include, but are not limited to, (I) compounds containing one or more thiol groups, such as thiol containing amino acids, and (II) sulfides. Nonlimiting examples of thiol containing compounds include thioglycolic acid, thioethylene glycol, thioglycerol, thioethanol, thioactic acid, thiosalicylic acid and salts thereof (e.g., calcium, sodium, strontium, potassium, ammonium, lithium, magnesium, and other metal salts). Nonlimiting examples of thio-containing amino acids or their derivatives include L-cysteine, D-cysteine, DL-cysteine, N-acetyl-L-cysteine, DL-homocysteine, N-carbamoyl cysteine, glutathion, and

cysteamine, and salts and esters thereof (e.g., methyl and ethyl esters). Non-limiting examples of sulfides include calcium sulfide, sodium sulfide, potassium sulfide, lithium sulfide, and strontium sulfide.

[0280] RF currents are then applied to the skin region treated with the depilatory substance or depilatory composition (step **52**). The application of RF currents to the skin may be done using any of the types of RF current applicators disclosed hereinabove or known in the art. The RF currents are applied to the depilatory substance treated skin for a period of time sufficient for heating the skin or specific parts of the skin in the vicinity of the hair shafts to a temperature which is sufficient for substantially increasing or augmenting or accelerating the chemical depilatory action of the depilatory substance on the hair shafts and/or on the skin tissue adjacent the hair shaft and or the follicular tissues, as compared to the chemical depilatory action of the same depilatory substance in the absence of the RF current application induced temperature increase.

[0281] Typically, the time of application of the RF currents to the depilatory substance treated skin is in the order of a few seconds to a few minutes (however, this time may vary as disclosed in more detail hereinafter). Thus, a possible advantage of the methods of the present invention is that the user may save time, since the amount of time required for performing depilation by the methods of the invention may be significantly shortened as compared to using the same depilatory agent without the application of the RF currents to the skin.

[0282] However, the time of application of the RF currents to the depilatory substance treated skin may vary considerably depending, inter alia, on the exact chemical composition of the depilatory substance, the concentration and type of the active ingredient(s) in the depilatory composition, the nature of the applied RF current's parameters (including but not limited to the RF current frequency, peak-to peak voltage applied to the RF electrodes, the duty cycle of the RF current delivery and the like), the type of skin being treated (facial skin, limb skin, torso skin and the like) and other factors. Thus, it may be possible to use a treatment time which is substantially higher than a few minutes by using depilatory agents having less active or more gentle depilatory activity which may allow the extension of the RF current treatment of the depilatory agent treated skin beyond the above indicated time values and possibly extending to treatment times of fifteen minutes or longer than fifteen minutes.

[0283] The method may also (optionally) include the removing of the remaining depilatory substance (or depilatory composition) from the treated skin region (step **54**) after the termination of the application of RF currents to the skin. The (optional) step of removing may be performed by washing or rinsing the treated skin region with water and/or by any other suitable solvent or solvent mixture. For example, it may be possible to remove the remaining depilatory substance by rinsing with water followed by application of a solution containing aloe vera gel or extract for soothing the skin or any other skin soothing agent known in the art. Alternatively, the remaining depilatory agent may be removed from the skin by wiping the treated skin region with a damp cloth or paper towel or by any suitable wiping tissue or piece of absorbent material. Such wiping material may be moistened by water, another solvent or by a solution or cream which is formulated for removing (by absorption) the remaining depilatory substance from the skin or for chemically deactivating the depilatory agents included therein.

[0284] For example, as many of the commercially available depilatory formulations are known to contain basic substances such as metal hydroxides and often have very basic pH values (typically in the pH 9-11 range). Therefore, the wiping agent or formulation used for stopping or at least reducing the depilatory chemical action of any amounts of depilatory agents remaining after the wiping or rinsing of the treated skin region may contain one or more cosmetically acceptable buffering or neutralizing agents to readjust the pH of the treated skin region to pH values of normal human skin or even below the normal values (typically, but not obligatorily, pH values in the range of 6.0-7.5 may be acceptable, but other pH values may also be used).

[0285] Reference is now made to FIG. **24** which is a schematic graph illustrating a curve representing the skin temperature as a function of time during various stages of operation of skin treating devices and systems of the present application.

[0286] The horizontal axis of the graph represents time in arbitrary units and the vertical axis of the graph represents the temperature (in arbitrary units) as measured by a temperature sensor included in any of the skin treating devices and/or systems disclosed herein. The temperature curve **392** schematically represents the skin temperature (such as for example the skin temperature measured by the temperature sensor **250** of FIG. **19**), or the temperature of an RF electrode (not shown) as may be measured by a temperature sensor thermally coupled to an RF electrode, in accordance with the different embodiments of the devices used. It is noted that the temperature curve **392** does not represent an actual temperature measured in an experiment but is merely a fictional curve useful as a representation or simulation for demonstrating possible steps (or stages) in the operation of the skin treating devices and systems disclosed herein.

[0287] In operation of the device and/or system, (such as but not limited to, any of the devices and/or described herein and including one or more temperature sensors thermally couplable to the skin or thermally coupled to one or more RF electrode(s)), after the application of the depilatory substance to the skin, the RF energy applying device is placed in contact with the depilatory substance treated skin. Before activation of the device, the temperature of the skin TA is the ambient skin temperature. At the time point R the user initiates the RF energy application by the device (such as, for example, by pressing the activating button **204** of the device **200**). After the activation, the device starts applying RF energy to the skin (if the device is includes a motorized RF electrode assembly, the device may also initiate the moving and/or rotation of any movable RF electrodes included in the device being used). The temperature increases over time as the application of RF energy to the skin raises the temperature of the skin (as well as the temperature of the RF electrodes). When the temperature reaches a temperature threshold value T**1**, schematically represented by the point M on the curve **392**, the system or the device being used may provide a first signal or indication to the user. The first signal may be an auditory signal such as, for example, a beep or a tone and the like but may also be a visual signal such as, but not limiting to the turning on of a green colored light emitting diode (LED) installed in the device or in the system (LED is not shown). The first signal indicates to the user that the skin (and/or the RF electrodes) have reached the temperature value T**1** which is optimal for the skin treating operation of the device. This may indicate to the user that the user may start moving the device along the skin for treating different skin regions.

[0288] If, for any reason, the temperature of the skin (and/or of an RF electrode) increases beyond a second threshold value T**2** determined as not safe for skin treatment for an extended time period (such as, but not limited to, an instrument malfunction, a stopping of the movement of the elec-

trodes on the skin surface because of a mechanical obstruction or a motor malfunction, or for any other reason) as represented by the point CT on the curve **392**, the device may automatically terminate the application of RF energy to the skin through the RF electrodes and may also (optionally) terminate the movement of any movable RF electrodes included in the device (such as, for example by switching of the power supplied to the motor **122**, or the like). Additionally and/or alternatively, if the temperature exceeds the value T**2**, the device and/or system may provide another signal to the user indicating that the use of the device should be terminated (for example, by lifting the device off the skin's surface to reduce or prevent any possible skin damage). The second signal may be auditory and/or visual, such as for example for example, a beep (preferably different then the beep used in the first auditory signal) or a tone (preferably different than the tone used in the first auditory signal) and the like but may also be a visual signal such as, but not limiting to the turning on of a red colored light emitting diode (LED) installed in the device or in the system (LED is not shown). After the automatic termination of the power delivered to the RF electrode, the skin temperature (and/or the RF electrode(s) temperature) starts decreasing as is shown in the later part of the curve **392** after the point CT.

[0289] It is noted that the controlling of the activation and termination of RF energy delivery from the RF energy source to the RF electrodes of the Devices and systems may be controlled by a suitable control unit (not shown in detail in the Figures) and/or controller unit that may be included in the device. For example, the controller may be implemented as a microprocessor or microcontroller unit attached to the printed circuit board **322** of the device **300** (of FIG. **20**). However, such a controller or processor unit may also be placed in any other desired part of the system (such as, for example, in the RF current generating unit **12** of the system **10** (of FIG. **7**).

[0290] Additionally, such microcontroller or microprocessor units included in the devices and systems disclosed in the present application may also be used to control the movement of any moving mechanisms used in the devices (such as, but not limited to the motor **122**), and (optionally) for controlling the delivering of the first and second signals to the user by using any suitable auditory signal producing device or unit (such as, but not limited to a suitable speaker and/or beeper, and/or any other type or sound generating device known in the art) and/or any suitable visual signal producing device or unit (such as but not limited to LEDs, display units, screens and the like).

[0291] It will be appreciated that the methods and devices disclosed herein are not intended to be limited by the particular examples disclosed herein by way of example only. For example, the RF currents may be applied to the skin by using any type of RF current delivery device or system known in the art (including, but not limited to, any such RF current delivery devices designed for skin treatment applications that do not involve hair removal by the use of depilatory compositions as disclosed herein). Furthermore, any RF current delivery device or system having RF electrode shape, number, configurations and implementation (including, but not limited to, stationary RF electrodes, movable RF electrodes, monopolar electrode configurations, bipolar and/or multipolar RF electrode configurations and the like) different than the limited exemplary RF current delivery devices disclosed herein, may also be used in implementing various embodiments of the invention.

[0292] Reference is now made to FIG. **25** which is a schematic part cross-sectional diagram illustrating in detail another motorized movable RF electrode assembly having movable and stationary RF electrodes, suitable for use with the skin treatment device of FIG. **18**, in accordance with another embodiment of the skin treatment devices of the present application.

[0293] The motorized RF electrode assembly **235** is similar (but not identical) in construction to the motorized RF electrode assembly **230** of FIG. **19**, the difference being that the motorized RF electrode assembly **235** includes a base plate **275** different than the base plate **270** of FIG. **19**. The base plate **275** has an extending member **275**A to which a stationary RF electrode **150**F is attached. The extending member **275**A has suitable dimensions such that when the motorized RF electrode assembly **235** is attached to the housing **202** and is pushed against the skin, all the RF electrodes including the four movable RF electrodes **150**A-**150**D and the Stationary RF electrode **150**F contact the treated skin. It is noted that the insulated electrical wire and the connector electrically coupling the wire to the RF electrode **150**F are not shown in FIG. **25** for the sake of clarity of illustration. However, such a wire may pass along and/or may be attached to the extending member **275**A or alternatively may pass through a suitable hollow passage (Not shown) passing through the extending member **275**A and exiting at the lower side of the base plate **275** (not shown).

[0294] In operation, the RF electrodes **150**A-**150**D of the motorized RF Electrode assembly may be rotatably moved along the skin by the RF electrode carrying member **240**, as disclosed hereinabove in detail for the motorized RF electrode assembly **230** (of FIG. **19**), while the RF electrode **150**F does not move and remains stationary with respect to the housing **202**. However, it is noted that the RF electrode **150**F may also be moved relative to the skin during treatment by simply moving the entire skin treating device (to which the motorized RF electrode assembly **235** is attached) along the surface of the skin.

[0295] It will thus be understood by the person skilled in the art that the skin treating devices and systems of the present application may be modified to implement additional embodiments of the devices and systems described herein including any suitable number and configuration of RF electrodes including any suitable or desired combinations of one or more movable RF electrode(s) with One or more Stationary RF electrode(s).

[0296] Additionally, it will be appreciated that the specific mechanisms disclosed hereinabove for moving and/or rotating the movable RF electrodes are given by way of example only and any other suitable type of moving and/or rotating mechanism known in the art may be used in the embodiments of the devices and systems disclosed hereinabove.

[0297] It is further noted that the dispensing units used in the devices and systems of the present invention for dispensing the depilatory substance onto the skin may include any type of dispensing unit including but not limited to, a hand operated dispensing unit, a pump operated dispensing unit, a valve operated dispensing unit, a pressurized dispensing unit, a propellant operated dispensing unit, a disposable dispensing unit, a replaceable dispensing unit, a refillable dispensing unit, a canister based dispensing unit, a dispensing unit including a fixed reservoir, a dispensing unit including a replaceable reservoir, and a dispensing unit including a disposable reservoir. Additionally, more than one dispensing unit may be included in any of the devices disclosed hereinabove including any combinations of all the different types of dispensing units disclosed hereinabove.

[0298] It is finally noted that the springs **154**A-**154**D and/or the flexible sleeve like member **205** disclosed hereinabove may be replaced by any other type of suitable elastic, or

spring-like element(s) known in the art, including, but not limited to, a plurality of springs, a plurality of elastic members (such as for example leaf springs or any other type of elastic member known in the art), and a flexible sleeve-like member.

What is claimed is:

1. A device for treatment of skin tissue, the device comprising:

RF electrodes for applying RF energy to the skin; and

a dispensing unit for dispensing a depilatory substance onto the skin.

2. The device according to claim **1** further including an RF energy source for energizing said RF electrodes.

3. The device according to claim **2** wherein said RF energy source is selected from an RF energy source included in said device and an RF energy source disposed outside said device and electrically coupled to said RF electrodes.

4. The device according to claim **1** further including a hand held housing wherein said RF energy source, said RF electrodes and said dispensing unit are attached to said housing.

5. The device according to claim **1** further including a hand held housing said hand held housing is part of a system including an RF current generating unit external to said housing and electrically couplable to said RF electrodes for providing RF energy thereto, and wherein said RF electrodes and said dispensing unit are attached to said hand held housing.

6. The device according to claim **1** wherein said RF electrodes are selected from fixed RF electrodes and movable RF electrodes.

7. The device according to claim **6** wherein said RF electrodes are RF electrodes movable relative to said device and to the surface of the skin for distributing the RF energy to various parts of the skin and for spreading said depilatory substance on the surface of the skin.

8. The device according to claim **7**, wherein said RF electrodes are attached to an RF electrode assembly.

9. The device according to claim **8** wherein said RF electrode assembly includes a motor for moving at least one RF electrode of said RF electrodes.

10. The device according to claim **9**, wherein said motor is an electrical motor.

11. The device according to claim **9** wherein said RF electrodes are attached to a movable RF electrode carrying member coupled to said motor.

12. The device according to claim **11**, also including a stabilizing member attached to said housing for stabilizing the position of said device on the skin while said RF electrode carrying member is moving along the surface of the skin.

13. The device according to claim **12**, wherein said stabilizing member has a first portion attached to said housing and a second portion configured for contacting the skin.

14. The device according to claim **13**, wherein said second portion of said stabilizing member has a plurality of spaced apart skin contacting portions for contacting the skin.

15. The device according to claim **12**, wherein said stabilizing member is detachably attached to said housing.

16. The device according to claim **11**, wherein said motor has a rotatable shaft and wherein said RF electrode carrying member is eccentrically attached to said shaft.

17. The device according to claim **11**, wherein said RF electrode carrying member is eccentrically attached to a coupling member attached to said rotatable shaft.

18. The device according to claim **11** wherein said motor has a rotatable shaft having a first shaft portion proximal to said motor and a second shaft portion bent at an angle relative to said first shaft portion and wherein said RF electrode carrying member is movably attached to said second shaft portion.

19. The device according to claim **18** wherein said second shaft portion has a spherically shaped member formed at its end distal from said motor, said RF electrode carrying member has a spherically shaped socket formed therein, wherein said spherically shaped member is disposed within said spherically shaped socket to enable said RF electrode carrying member to move at an angle to said second shaft portion.

20. The device according to claim **18** wherein said second shaft portion is movably disposed within a recess formed within said RF electrode carrying member.

21. The device according to claim **11** wherein said RF electrode carrying member is movably attached to said RF electrode assembly or to said housing by one or more spring-like elements.

22. The device according to claim **21** wherein said one or more spring-like members are selected from a plurality of springs, a plurality of elastic members, and a flexible sleeve-like member.

23. The device according to claim **22** wherein said flexible sleeve-like member is a concertina-like member.

24. The device according to claim **22** wherein said one or more spring-like members comprises a flexible sleeve-like member, said flexible sleeve like member has a first end attached to said housing or to said RF electrode assembly and a second end attached to said RF electrode carrying member.

25. The device according to claim **22** wherein said one or more spring-like members are electrically conducting elements electrically connected to said RF electrodes for providing RF energy to said RF electrodes.

26. The device according to claim **1** wherein said dispensing unit is selected from a hand operated dispensing unit, a pump operated dispensing unit, a valve operated dispensing unit, a pressurized dispensing unit, a propellant operated dispensing unit, a disposable dispensing unit, a replaceable dispensing unit, a refillable dispensing unit, a canister based dispensing unit, a dispensing unit including a fixed reservoir, a dispensing unit including a replaceable reservoir, and a dispensing unit including a disposable reservoir.

27. The device according to claim **1** wherein said dispensing unit is fluidically coupled to one or more hollow conduits passing through one or more of said RF electrodes for applying said depilatory substance to the skin through said one or more conduits.

28. The device according to claim **1** wherein said dispensing unit is fluidically coupled to one or more hollow conduits passing through an RF electrode carrying member to which said RF electrodes are attached, for applying said depilatory substance to the skin through said one or more conduits.

29. The device according to claim **1**, wherein said dispensing unit comprises a replaceable squeezable reservoir including said depilatory substance and a pressure exerting mechanism configured for applying pressure on said squeezable reservoir.

30. The device according to claim **29**, wherein said pressure exerting mechanism comprises a compartment for accommodating said reservoir and a spring loaded pressure plate configured for applying pressure on said squeezable reservoir.

31. The device according to claim **29**, wherein said squeezable reservoir comprises a squeezable bag made from a pliable material.

32. The device according to claim **31**, wherein said pliable material is a polymer based pliable material.

33. The device according to claim **31**, wherein said squeezable reservoir also includes a dispensing tube configured to be sealingly attached to a depilatory substance inlet port included in said dispensing unit.

34. The device according to claim **31**, wherein said device includes an RF electrode carrying member to which said RF electrodes are attached, and wherein said squeezable reservoir also includes an elongated flexible hollow dispensing tube configured to be inserted through a hollow guiding member attached to said RF electrode carrying member, said dispensing tube is capable of being inserted into said guiding member and reaching an opening on the surface of said RF electrode carrying member facing said skin, wherein said depilatory substance may be applied to the skin through an opening at the end of said dispensing tube.

35. The device according to claim **34**, wherein said dispensing tube further includes a controllably openable valve for controlling the dispensing of said depilatory substance through said dispensing tube.

36. The device according to claim **34**, wherein said dispensing tube is an elastic member having a lumen in fluidic communication with said squeezable reservoir and wherein said device also includes a mechanism for constricting or closing the lumen of said dispensing tube by applying pressure on said dispensing tube to regulate or terminate the passage of said depilatory substance through said lumen.

37. The device according to claim **1**, also including at least one temperature sensor for determining the temperature of the skin.

38. The device according to claim **37**, wherein said at least one temperature sensor is selected from a remote sensing sensor which does not contact the skin, a contact type sensor operable in contact with the skin and any combinations thereof.

39. The device according to claim **37**, wherein said temperature sensor is selected from an infra-red detecting temperature sensor, a thermistor based temperature sensor and any combinations thereof.

40. The device according to claim **1**, also including at least one temperature sensor for determining the temperature of one or more of said RF electrodes.

41. The device according to claim **40**, wherein said at least one temperature sensor is a thermistor.

42. A device for treatment of skin tissue, the device comprising:

means for applying RF energy to the skin; and

means for applying a depilatory substance onto the skin.

43. A device for applying RF energy to skin tissue treated with a depilatory substance, the device comprising:

a housing;

an RF electrode assembly attached to said housing and including RF electrodes for applying RF energy to the skin, at least one of said RF electrodes is movable relative to said housing and to the surface of the skin for distributing the RF energy to various parts of the skin and for spreading said depilatory substance along the surface of the skin; and

an RF energy source for energizing said RF electrodes.

44. The device according to claim **43**, wherein said RF energy source is selected from an RF energy source disposed within said housing and electrically connectable to said RF electrodes, and an RF energy source disposed outside of said housing and electrically connectable to said RF electrodes.

45. The device according to claim **43**, wherein said RF electrode assembly includes a motor for moving said at least one RF electrode.

46. The device according to claim **45**, wherein said motor is an electrical motor.

47. The device according to claim **45**, wherein said RF electrodes are attached to a movable RF electrode carrying member coupled to said motor.

48. The device according to claim **47**, wherein said motor has a rotatable shaft and wherein said RF electrode carrying member is eccentrically attached to said shaft.

49. The device according to claim **47**, wherein said motor has a rotatable shaft having a first shaft portion proximal to said motor and a second shaft portion bent at an angle relative to said first shaft portion and wherein said RF electrode carrying member is attached to said second shaft portion.

50. The device according to claim **49**, wherein said second shaft portion has a spherically shaped member formed at its end distal from said motor, said RF electrode carrying member has a spherically shaped socket formed therein, wherein said spherically shaped member is disposed within said spherically shaped socket to enable said RF electrode assembly to move at an angle to said second shaft portion.

51. The device according to claim **47**, wherein said electrode carrying member is movably attached to said RF electrode assembly or to said housing by one or more spring-like members.

52. The device according to claim **51**, wherein said one or more spring-like members are selected from a plurality of springs, a plurality of elastic members, and a flexible sleeve-like member.

53. The device according to claim **52**, wherein said flexible sleeve-like member is a concertina-like member.

54. The device according to claim **52**, wherein said one or more spring-like members comprises a flexible sleeve like member, said flexible sleeve like member has a first end sealingly attached to said housing or to said RF electrode assembly and a second end sealingly attached to said RF electrode carrying member.

55. The device according to claim **51**, wherein said one or more spring-like members comprises a flexible sleeve-like member, said flexible sleeve like member has a first end attached to said housing or to said RF electrode assembly and a second end attached to said RF electrode carrying member.

56. The device according to claim **51**, wherein said one or more spring-like members are electrically conducting elements electrically connected to said RF electrodes for providing RF energy to said RF electrodes.

57. The device according to claim **47**, also including a stabilizing member attached to said housing for stabilizing the position of said device on the skin while said RF electrode carrying member is moving along the surface of the skin.

58. The device according to claim **57**, wherein said stabilizing member has a first portion attached to said housing and a second portion configured for contacting the skin.

59. The device according to claim **58**, wherein said second portion of said stabilizing member has a plurality of spaced apart skin contacting portions for contacting the skin.

60. The device according to claim **57**, wherein said stabilizing member is detachably attached to said housing.

61. The device according to claim **43**, further including at least one dispensing unit for dispensing a depilatory substance onto the skin.

62. The device according to claim **61** wherein said at least one dispensing unit is selected from a hand operated dispensing unit, a pump operated dispensing unit, a valve operated dispensing unit, a pressurized dispensing unit, a propellant operated dispensing unit, a disposable dispensing unit, a replaceable dispensing unit, a refillable dispensing unit, a canister based dispensing unit, a dispensing unit including a fixed reservoir, a dispensing unit including a replaceable reservoir, and a dispensing unit including a disposable reservoir and any combinations thereof.

63. The device according to claim **62**, wherein said at least one dispensing unit comprises a replaceable squeezable reservoir including said depilatory substance and a pressure exerting mechanism configured for applying pressure on said squeezable reservoir.

64. The device according to claim **63**, wherein said pressure exerting mechanism comprises a compartment for accommodating said reservoir and a spring loaded pressure plate configured for applying pressure on said squeezable reservoir.

65. The device according to claim **63**, wherein said squeezable reservoir comprises a squeezable bag made from a pliable material.

66. The device according to claim **65**, wherein said pliable material is a polymer based pliable material.

67. The device according to claim **66**, wherein said pliable material is polyethylene.

68. The device according to claim **63**, wherein said squeezable reservoir also includes a dispensing tube configured to be attached to a depilatory substance inlet port included in said dispensing unit.

69. The device according to claim **63**, wherein said device includes an RF electrode carrying member to which said RF electrodes are attached, and wherein said squeezable reservoir also includes an elongated flexible hollow dispensing tube configured to be inserted through a hollow guiding member attached to said RF electrode carrying member, said dispensing tube is capable of being inserted into said guiding member and reaching an opening on the surface of said RF electrode carrying member facing said skin, wherein said depilatory substance may be applied to the skin through an opening at the end of said dispensing tube.

70. The device according to claim **69**, wherein said dispensing tube further includes a controllably openable valve for controlling the dispensing of said depilatory substance through said dispensing tube.

71. The device according to claim **69**, wherein said dispensing tube is an elastic member having a lumen in fluidic communication with said squeezable reservoir and wherein said device also includes a mechanism for constricting or closing the lumen of said dispensing tube by applying pressure on said dispensing tube to regulate or terminate the passage of said dispensing member through said lumen.

72. The device according to claim **61** wherein said dispensing unit is fluidically coupled to one or more hollow conduits passing through one or more of said RF electrodes for applying said depilatory substance to the skin through said one or more conduits.

73. The device according to claim **61** wherein said dispensing unit is fluidically coupled to one or more hollow conduits passing through an RF electrode carrying member to which said RF electrodes are attached, for applying said depilatory substance to the skin through said one or more conduits.

74. The device according to claim **43**, also including at least one temperature sensor for determining the temperature of the skin.

75. The device according to claim **74**, wherein said at least one temperature sensor is selected from a remote sensing type of sensor which does not contact the skin, a contact type sensor operable in contact with the skin and any combinations thereof.

76. The device according to claim **74**, wherein said temperature sensor is selected from an infra-red detecting temperature sensor, a thermistor based temperature sensor and any combinations thereof.

77. The device according to claim **43**, also including at least one temperature sensor for determining the temperature of one or more of said RF electrodes.

78. The device according to claim **77**, wherein said at least one temperature sensor is a thermistor.

* * * * *