US006277116B1

(12) **United States Patent**
Utely et al.

(10) **Patent No.: US 6,277,116 B1**
(45) **Date of Patent: Aug. 21, 2001**

(54) **SYSTEMS AND METHODS FOR SHRINKING COLLAGEN IN THE DERMIS**

(75) Inventors: **David Utely**, San Carlos; **Stuart Edwards**, Portola Valley; **Richard Goode**, Los Altos, all of CA (US)

(73) Assignee: **VidaDerm**, Sunnyvale, CA (US)

(*) Notice: Subject to any disclaimer, the term of this patent is extended or adjusted under 35 U.S.C. 154(b) by 0 days.

(21) Appl. No.: **09/251,554**

(22) Filed: **Feb. 17, 1999**

Related U.S. Application Data

(63) Continuation-in-part of application No. 08/637,095, filed on Apr. 24, 1996, which is a continuation of application No. 08/389,924, filed on Feb. 16, 1995, now Pat. No. 5,569,242, which is a continuation of application No. 08/238,862, filed on May 6, 1994, now Pat. No. 5,458,596.

(51) **Int. Cl.**[7] **A61B 18/18**

(52) **U.S. Cl.** **606/42**; 606/41; 606/50; 607/102; 607/109

(58) **Field of Search** 606/41, 42, 44, 606/48–50, 9; 607/115, 99–104, 108, 109, 139, 140, 148, 152, 153

(56) **References Cited**

U.S. PATENT DOCUMENTS

5,374,283 * 12/1994 Flick 607/46
5,569,242 * 10/1996 Lax et al. 606/42
5,588,960 * 12/1996 Edwards et al. 604/20
5,769,846 * 6/1998 Edwards et al. 606/41
5,843,078 * 12/1998 Sharkey 606/41
5,868,744 * 2/1999 Willmen 606/50
5,919,188 * 7/1999 Shearon et al. 606/41
6,010,500 * 1/2000 Sherman et al. 606/41
6,030,384 * 2/2000 Nezhat 606/48
6,068,629 * 5/2000 Haissaguerre et al. 606/41
6,068,653 * 5/2000 LaFontaine 607/116
6,077,257 * 6/2000 Edwards et al. 604/506
6,081,749 * 6/2000 Ingle et al. 607/101

* cited by examiner

Primary Examiner—Linda C. M. Dvorak
Assistant Examiner—David Ruddy
(74) *Attorney, Agent, or Firm*—Michael A. Glenn

(57) **ABSTRACT**

The invention provides a system and method for achieving the cosmetically beneficial effects of shrinking collagen tissue in the dermis in an effective, non-invasive manner, which leaves the outer layer of skin intact and undamaged. One embodiment of the invention provides electromagnetic energy to the skin of a patient. The device includes a carrier and an array of electrodes on the carrier. A microporous pad on the carrier overlies the array of electrodes, forming an interior chamber to contain an electrically conductive material. The microporous pad is adapted to contact a patient's skin and ionically transport the applied electromagnetic energy to ohmically heat dermal tissue beneath the epidermal skin region. The shape of the carrier may differ to match different skin topographies and the electrodes may be sized to extend into tissue to heat a dermal skin region.

10 Claims, 15 Drawing Sheets

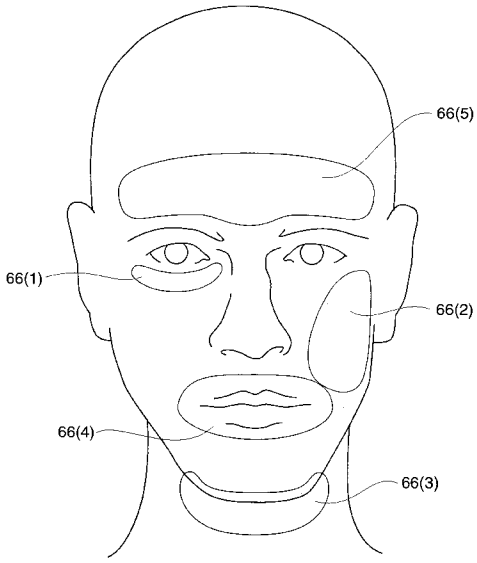

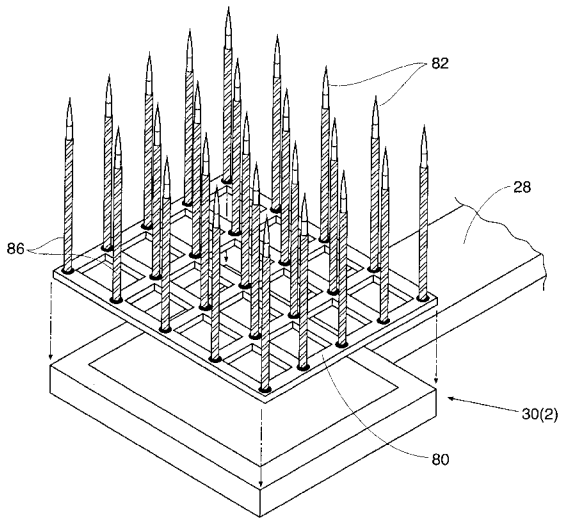

Serendia, LLC
Exhibit 2119
EndyMed v. Serendia
IPR2024-00845
Ex. 2119-001

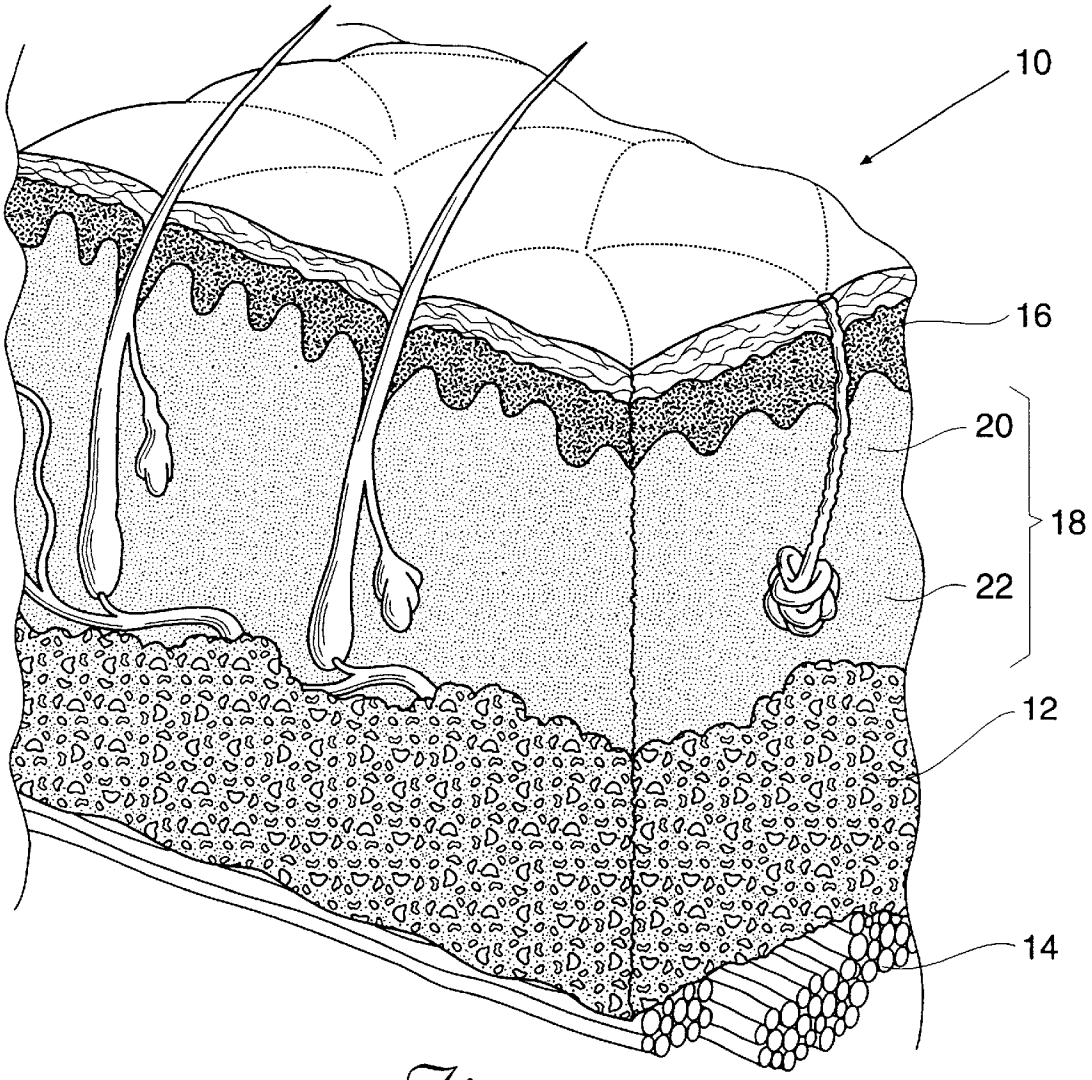

Fig. 1

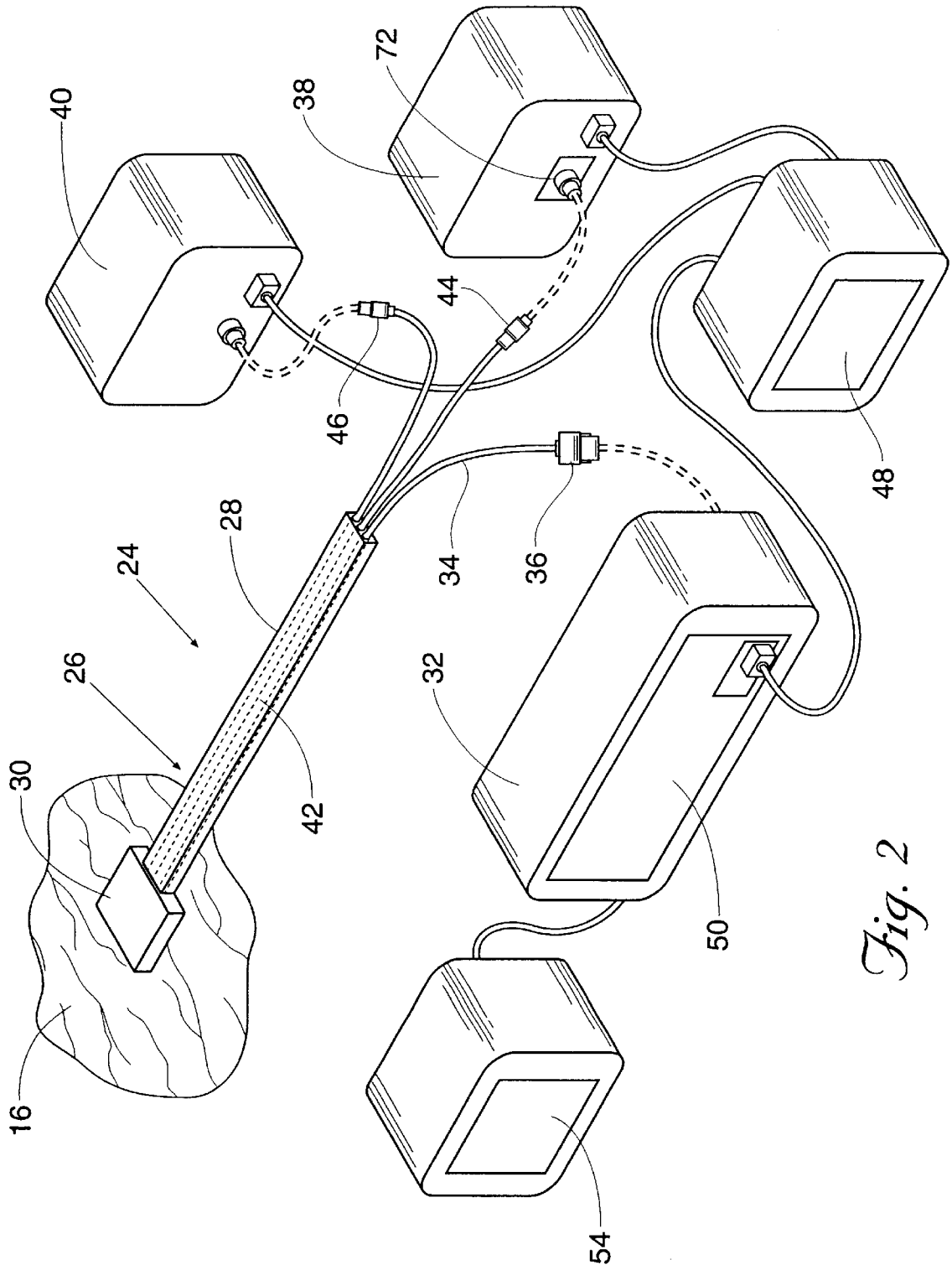

Fig. 2

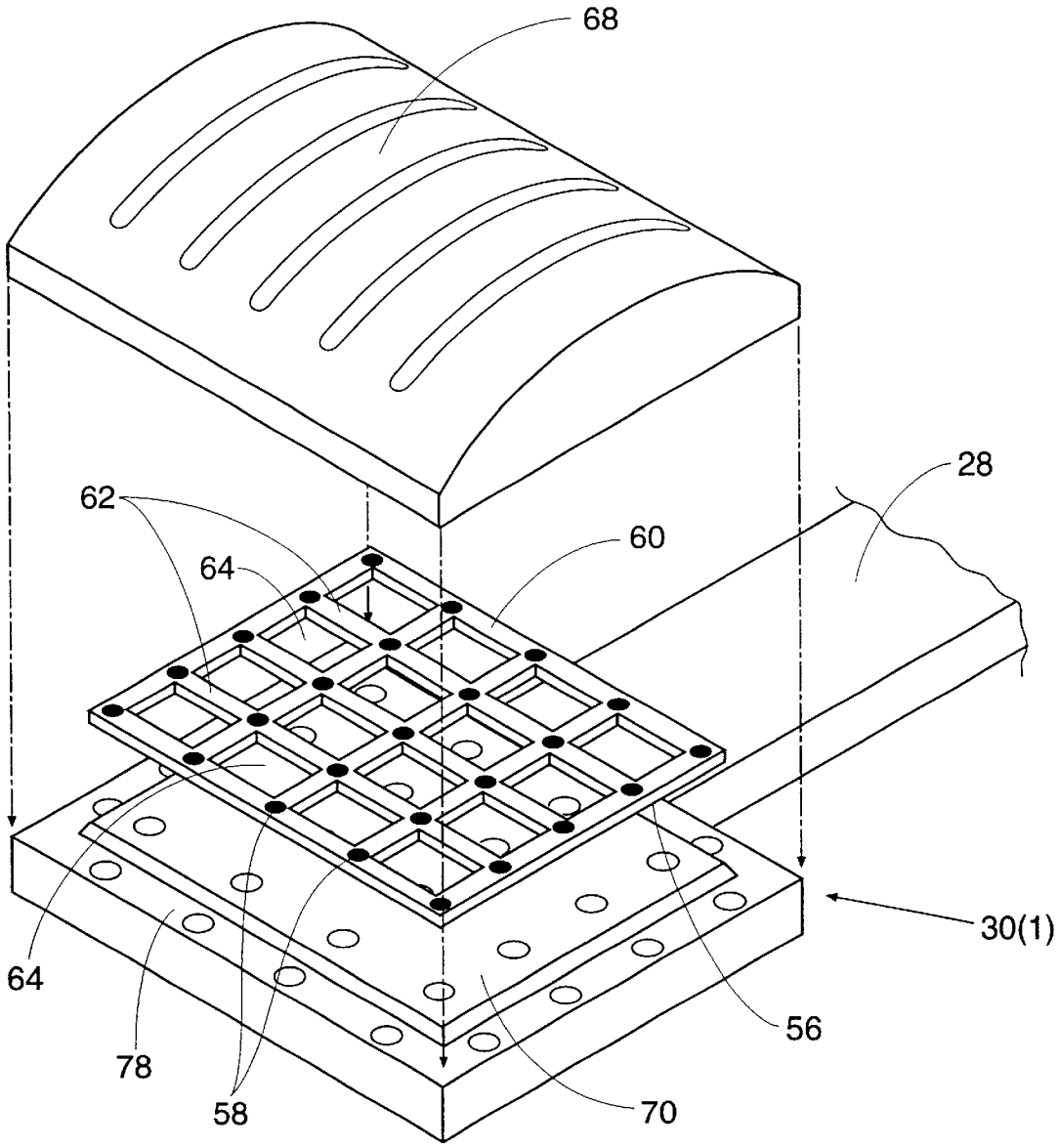

Fig. 3

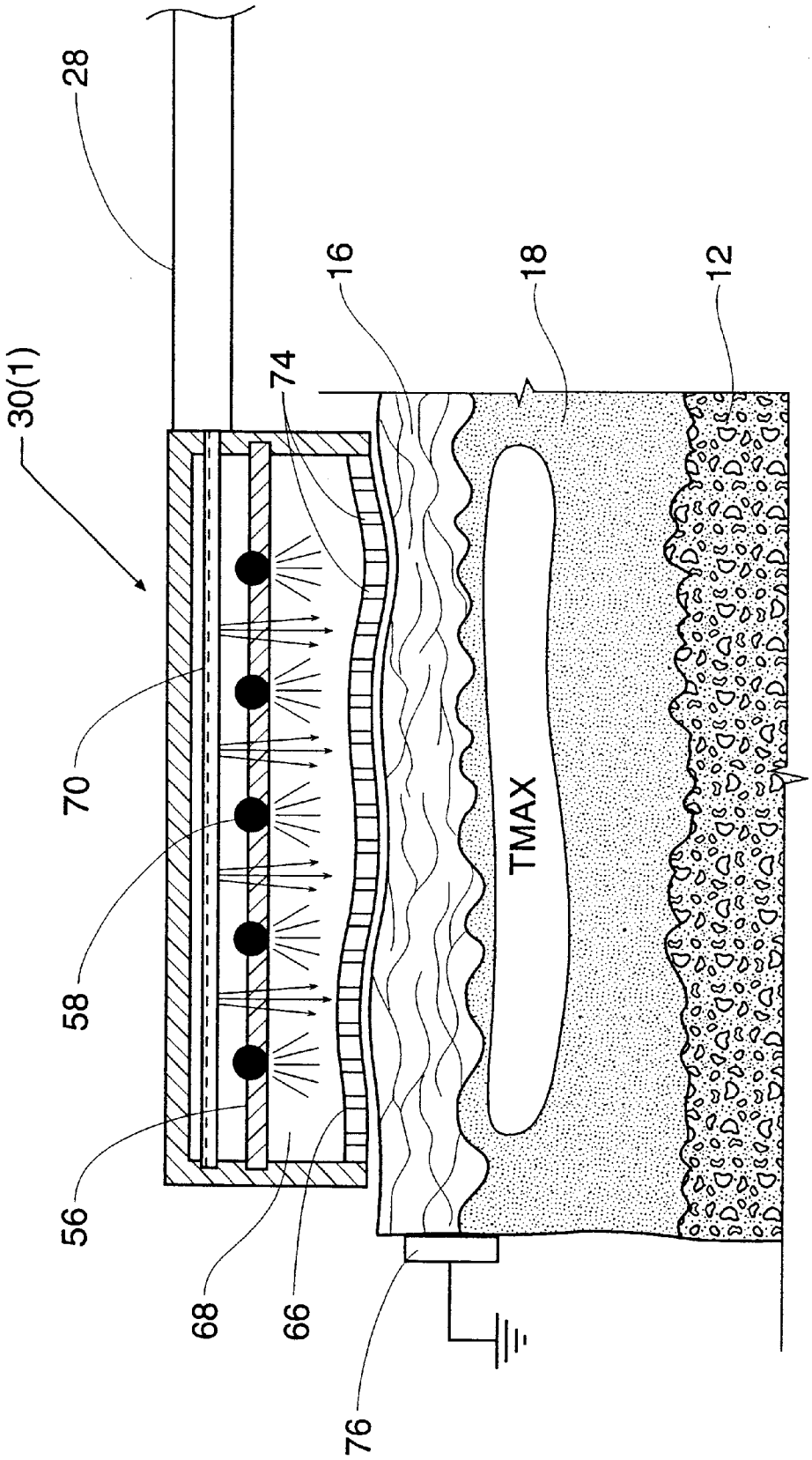

Fig. 4

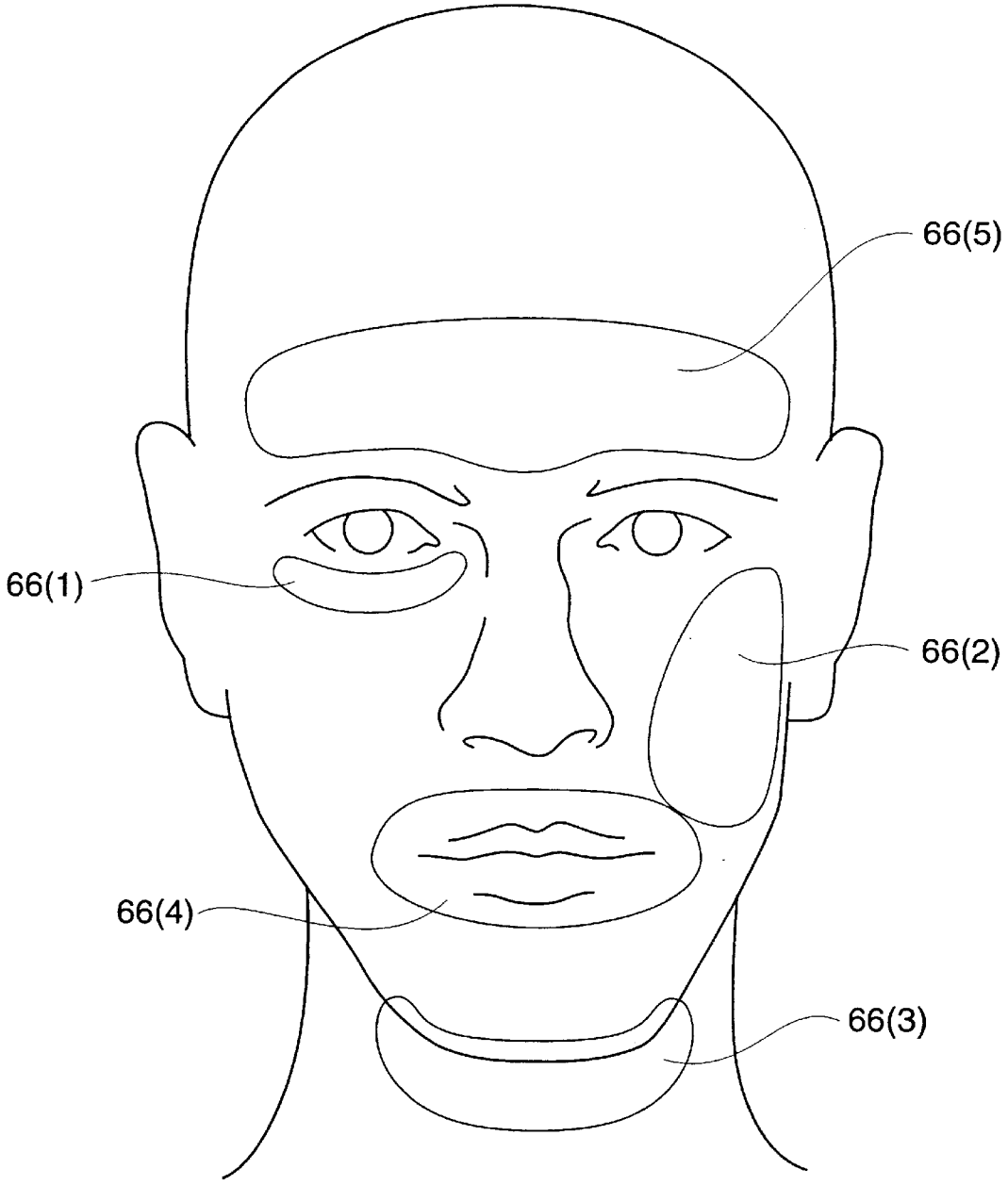

Fig. 5

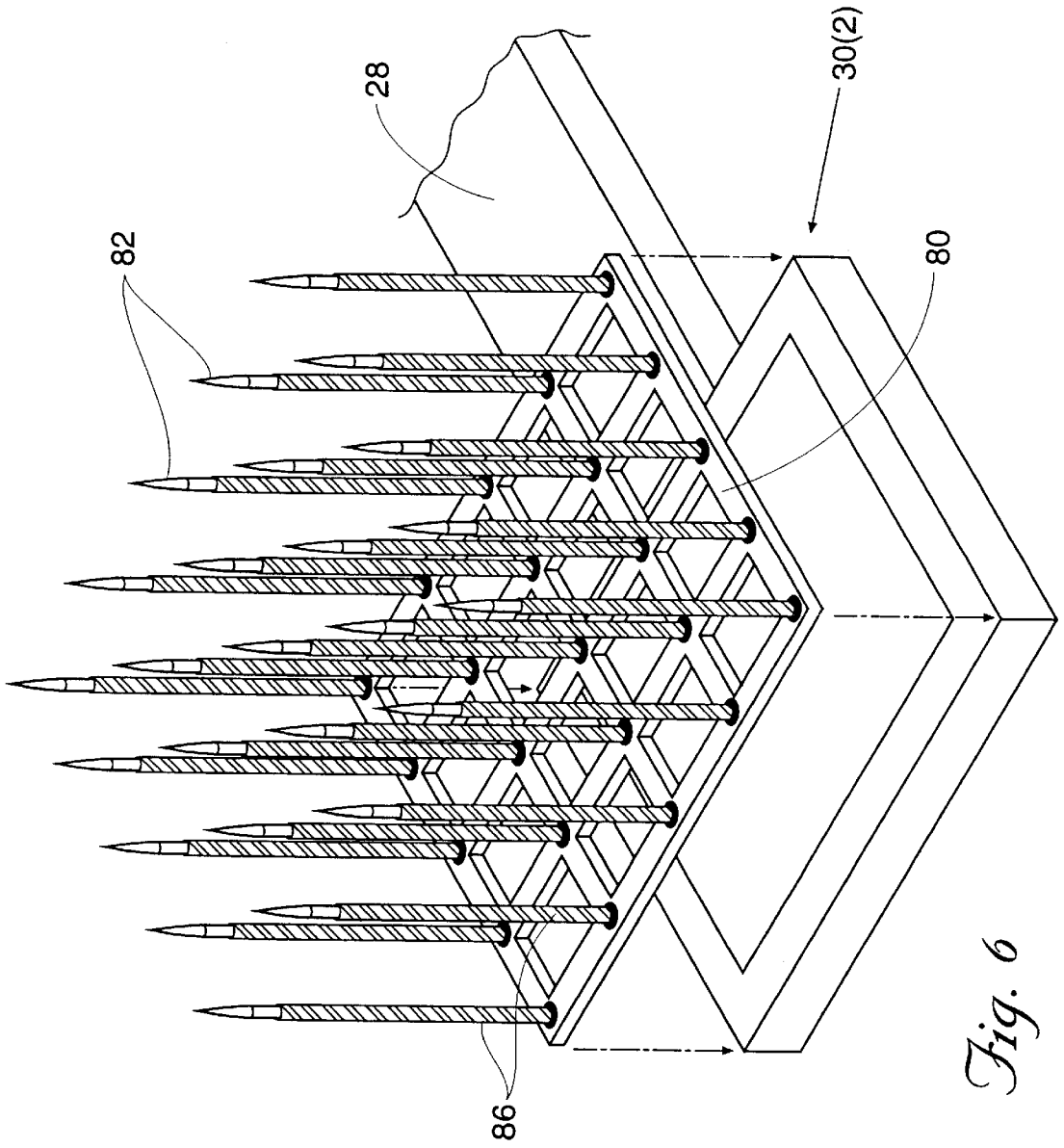

Fig. 6

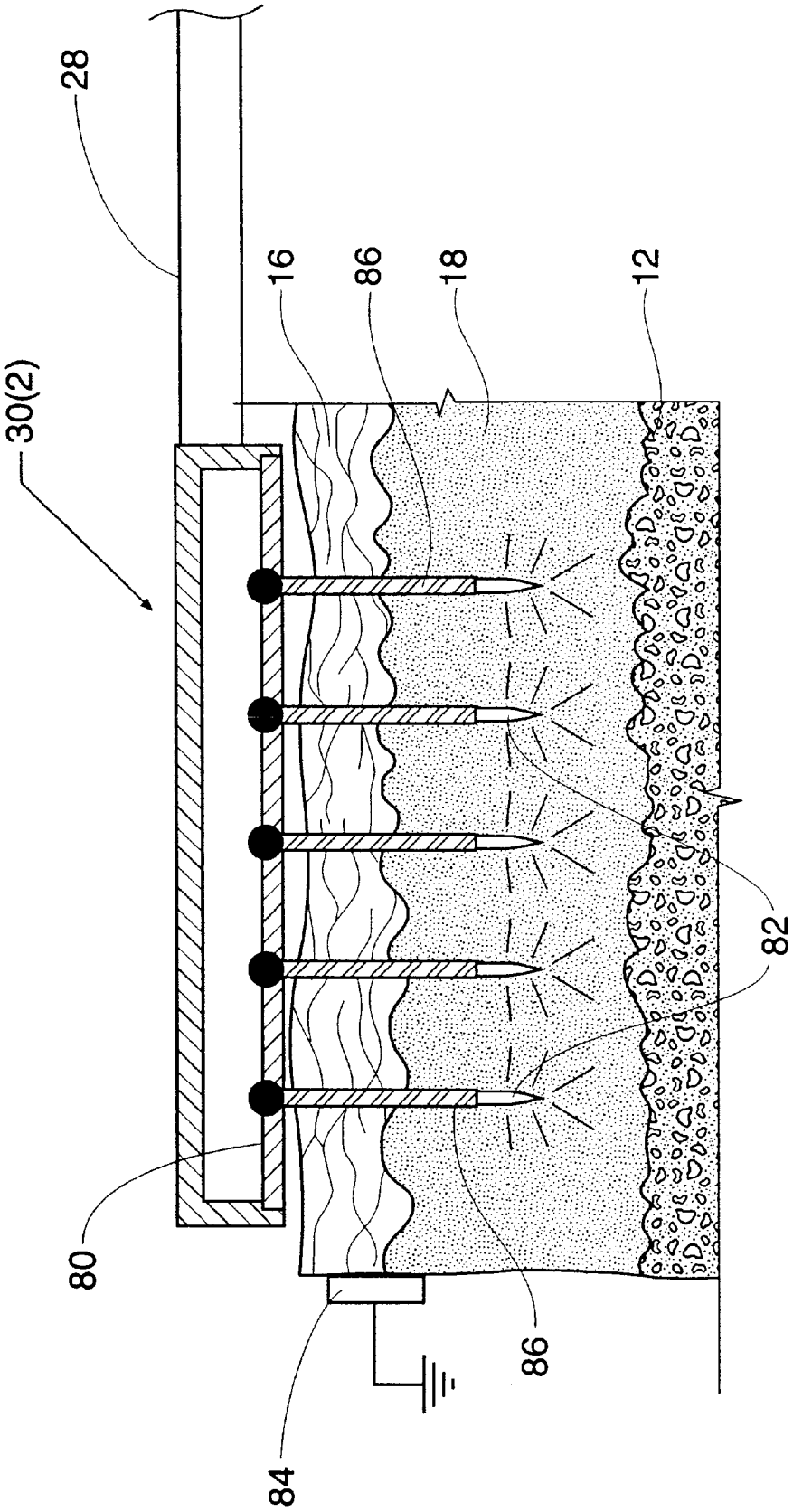

Fig. 7

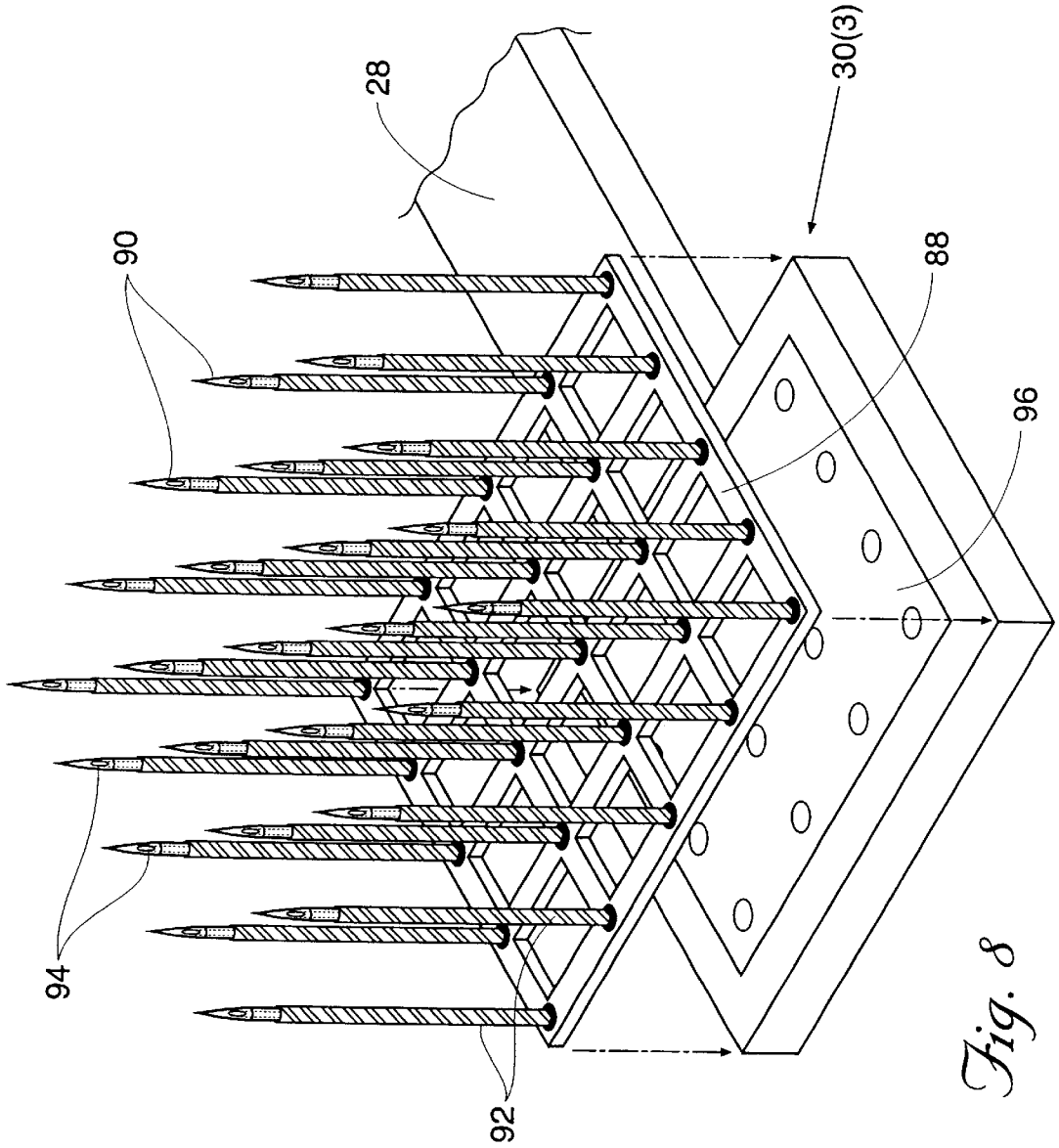

Fig. 8

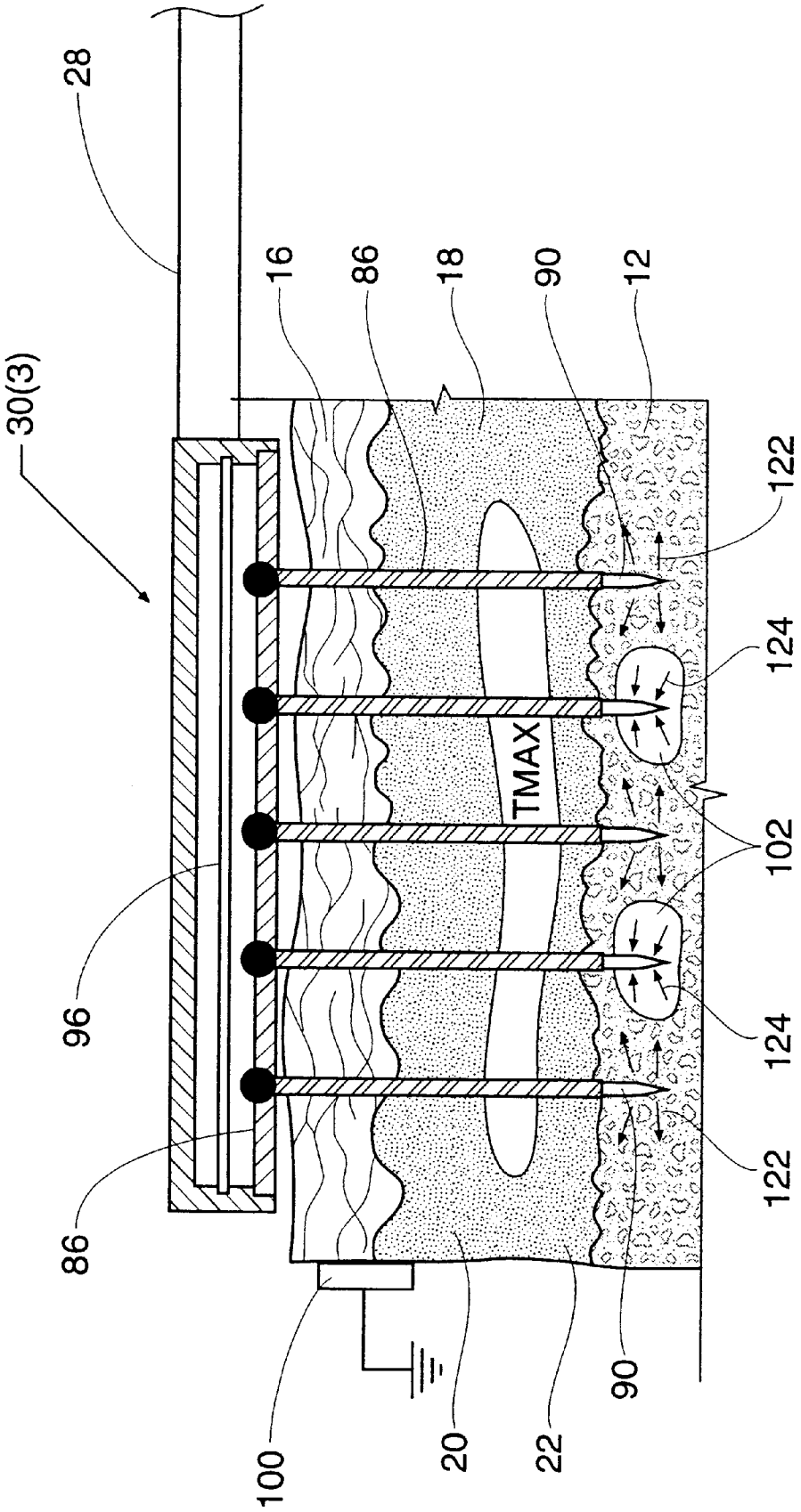

Fig. 9

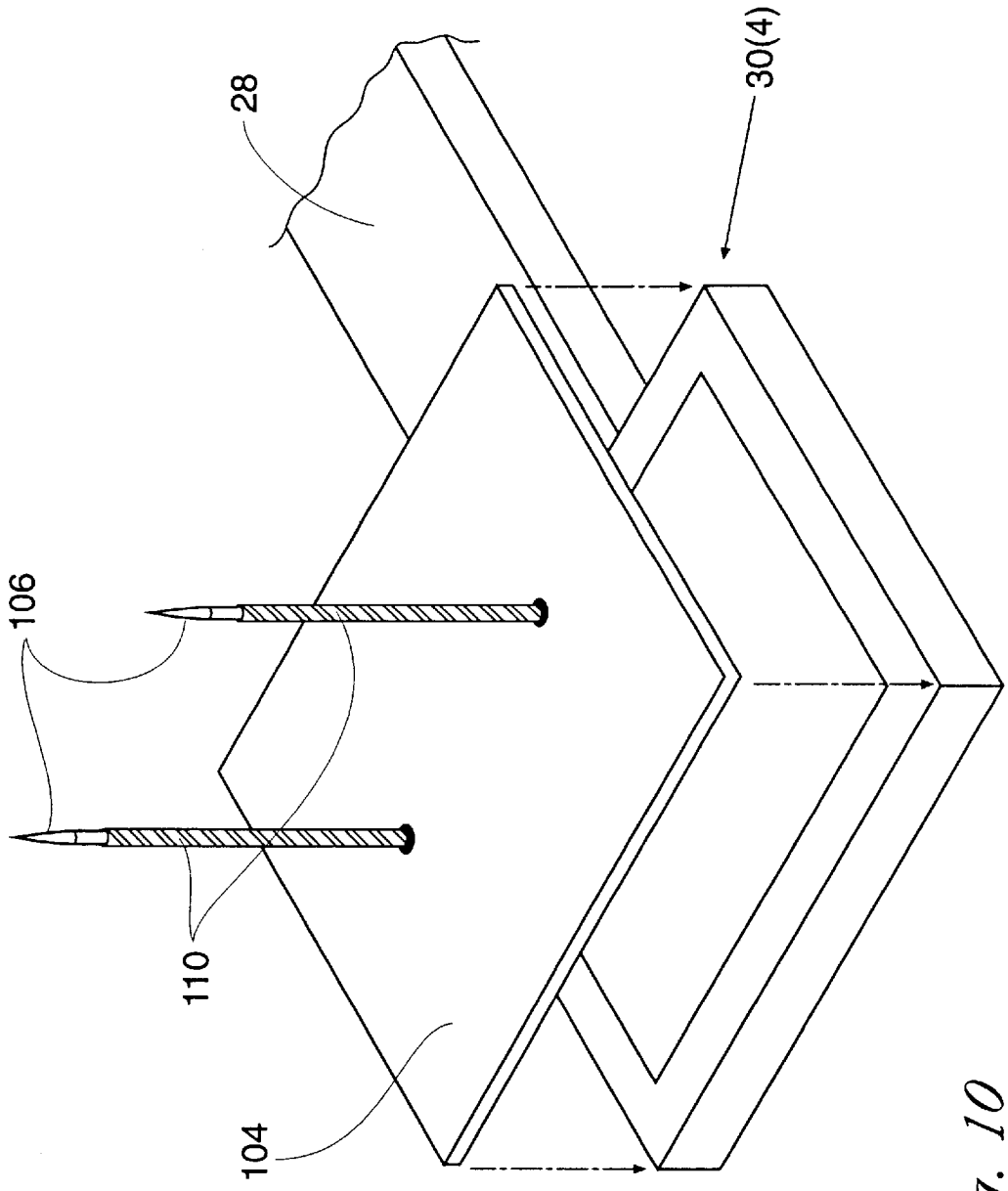

Fig. 10

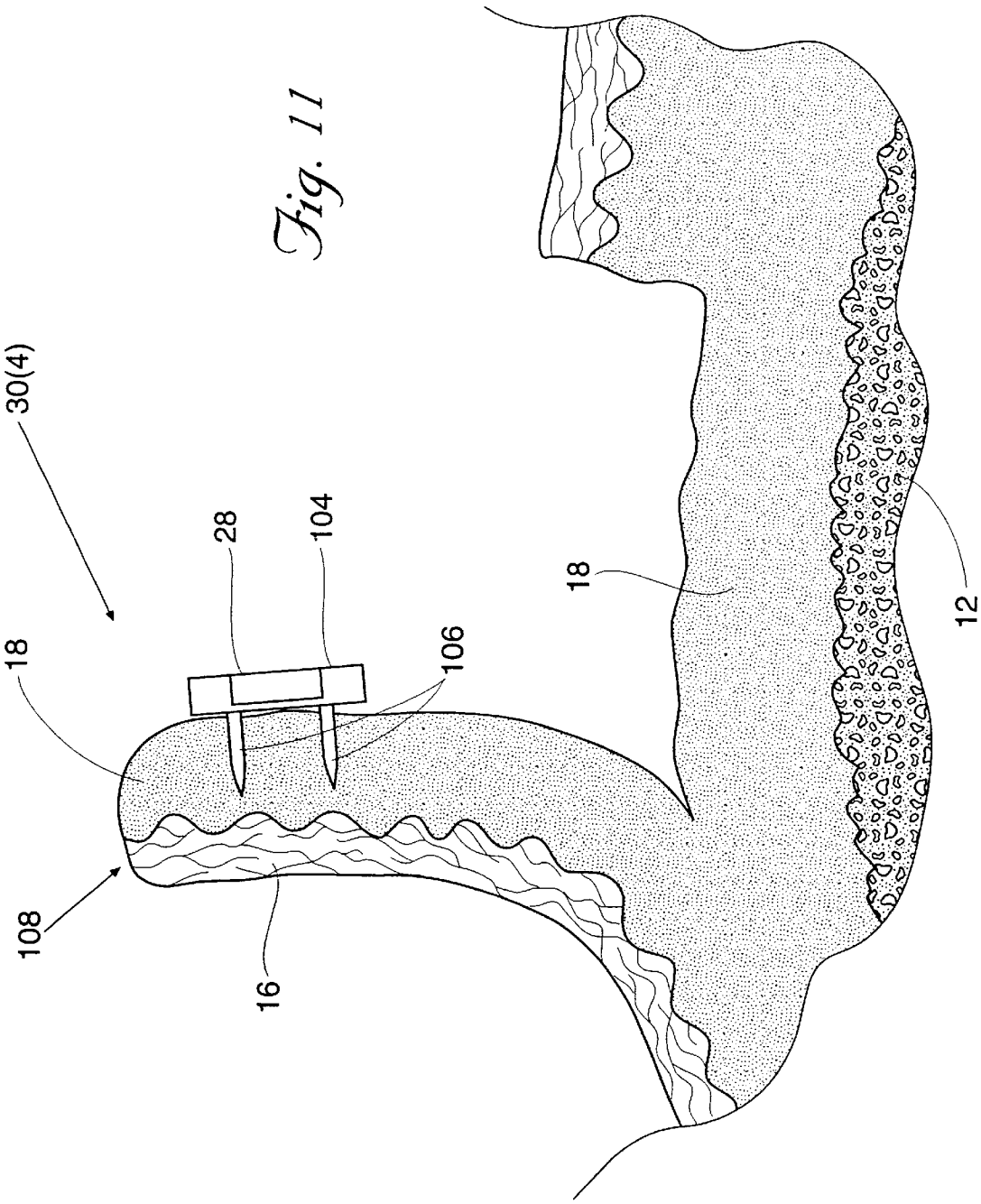

Fig. 11

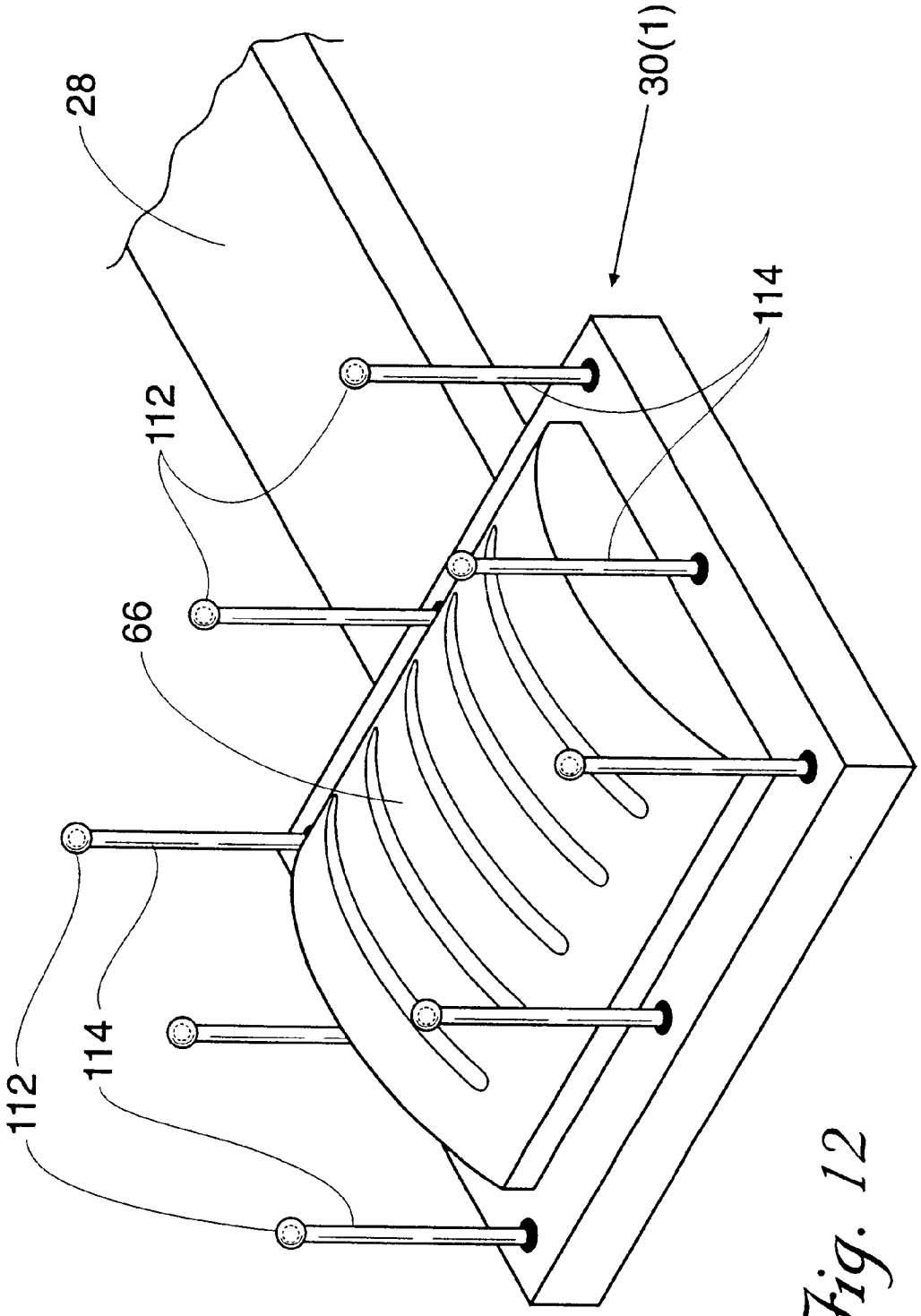

Fig. 12

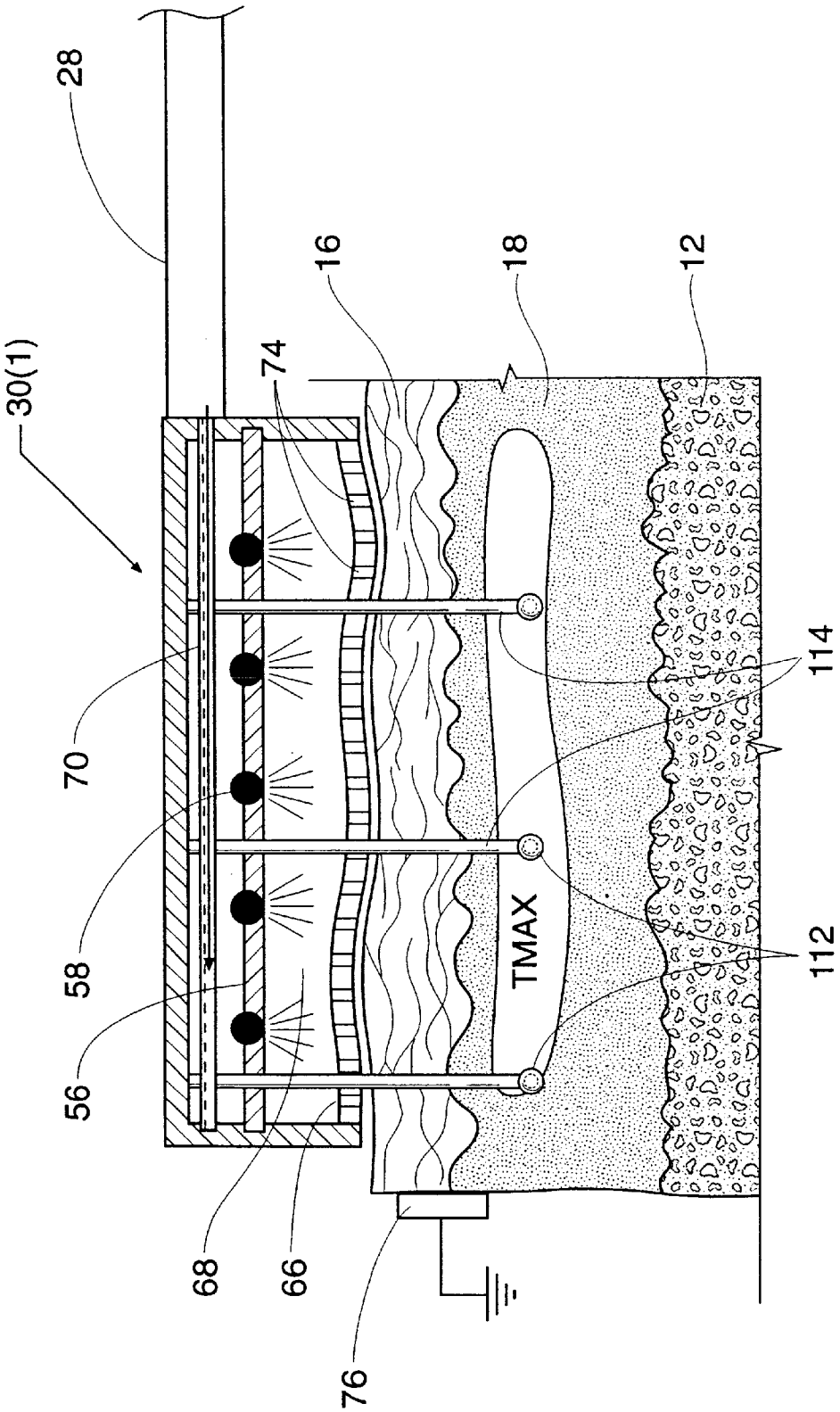

Fig. 13

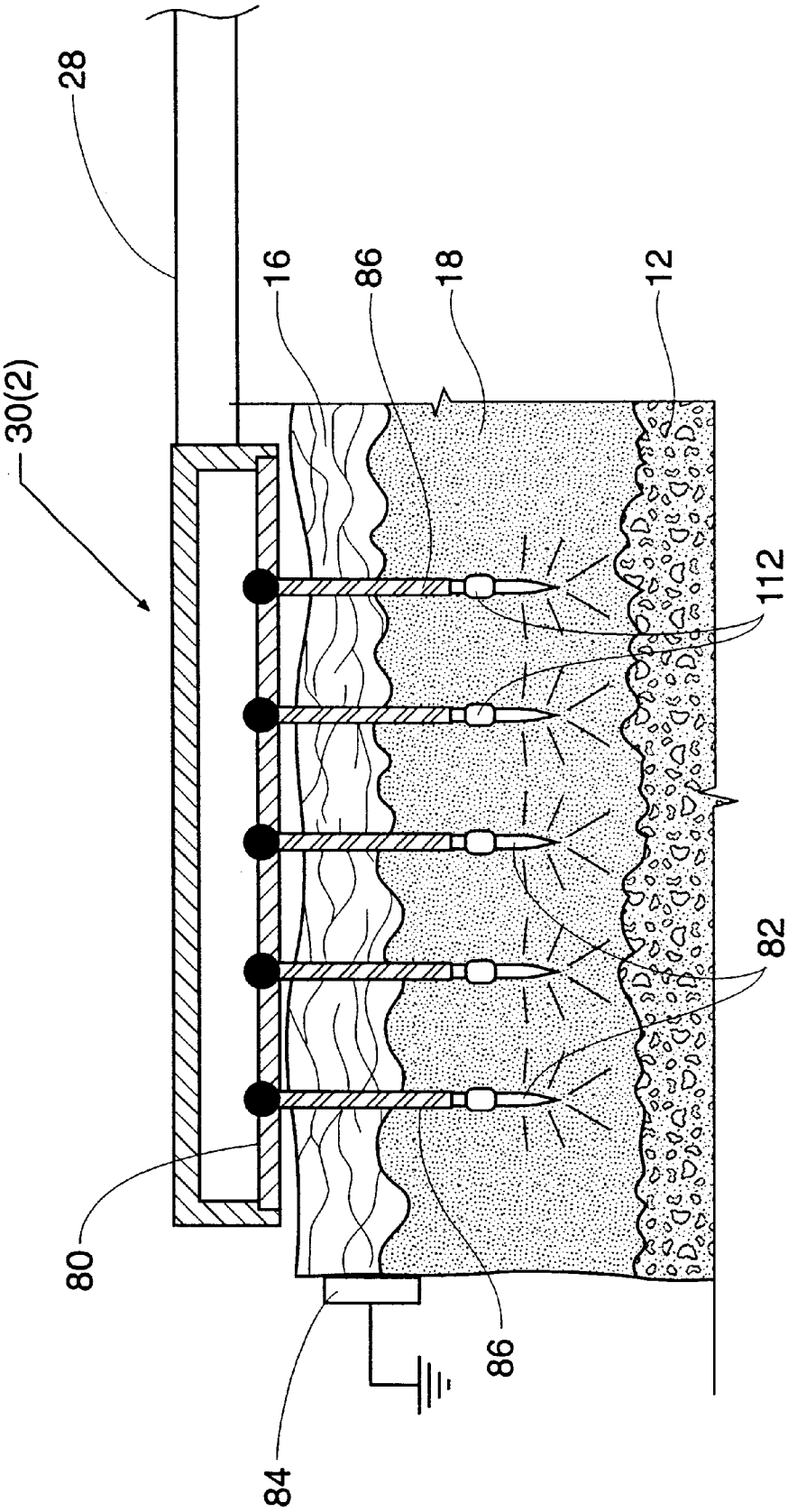

Fig. 14

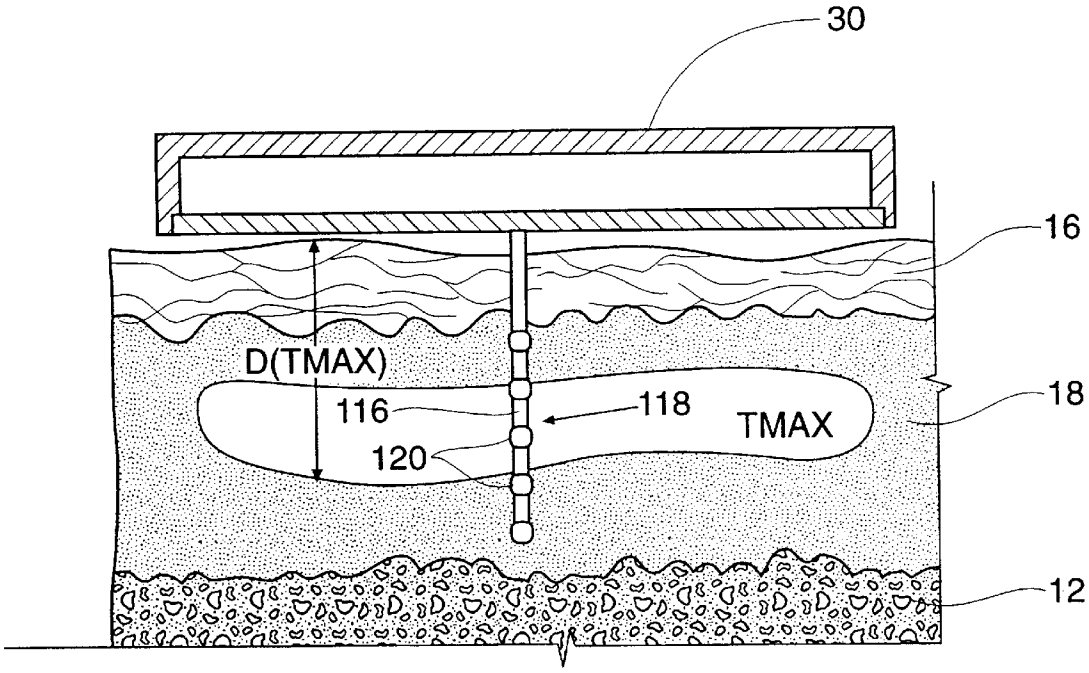

Fig. 15

SYSTEMS AND METHODS FOR SHRINKING COLLAGEN IN THE DERMIS

RELATED APPLICATION

This application is a continuation in part of copending U.S. Application Ser. No. 08/637,095, filed Apr. 29, 1996, entitled "Method and Apparatus for Controlled Contraction of Soft Tissue," which is a continuation of application Ser. No. 08/389,924, filed Feb. 16, 1995 (now U.S. Pat. No. 5,569,242), which is a continuation of application Ser. No. 08/238,862, filed May 6, 1994 (now U.S. Pat. No. 5,458,596).

FIELD OF THE INVENTION

In a general sense, the invention is directed to systems and methods for treating cosmetic conditions in the human body. In a more particular sense, the invention is directed to systems and methods for treating cosmetic conditions affecting the skin of the face and neck, as evidenced by the appearance of lines and wrinkles in the face, or neck, or both.

BACKGROUND OF THE INVENTION

The skin is the principal seat of the sense of touch. The skin also provides protection against the physical forces of the environment, such as heat, cold, sun rays, friction, pressure, and chemicals.

Exposure of the skin to these environmental forces can, over time, cause the skin to sag or wrinkle. Hyperfunctional nervous disorders and normal contraction of facial and neck muscles, e.g. by frowning or squinting, can also over time form furrows or bands in the face and neck region. These and other effects of the normal aging process can present an aesthetically unpleasing cosmetic appearance.

Accordingly, there is a large demand for systems and methods which serve to "tighten" the skin to remove sags and wrinkles in the face and neck.

One prior method surgically resurfaces facial skin by ablating the outer layer of the skin (from 200 μm to 600 μm), using laser or chemicals. In time, a new skin surface develops. The laser and chemicals used to resurface the skin also irritate or heat collagen tissue, which is widely present in the dermis. When irritated or heated in prescribed ways, the collagen tissue partially dissociates and, in doing so, shrinks. The shrinkage of collagen also leads to a desirable "tightened" look. Still, laser or chemical resurfacing leads to prolonged redness of the skin, infection risk, increased or decreased pigmentation, and scarring.

Lax et al. U.S. Pat. No. 5,458,596 describes the use of radio frequency energy to shrink collagen tissue. This cosmetically beneficial effect can be achieved in facial and neck areas of the body in a minimally intrusive manner, without requiring the surgical removal of the outer layers of skin and the attendant problems just listed.

SUMMARY OF THE INVENTION

The invention provides improved systems and methods of systems and methods of achieving the cosmetically beneficial effects of shrinking collagen tissue in the dermis in an effective, non-invasive manner, which leaves the outer layer of skin intact and undamaged.

One aspect of the invention provides systems and methods for applying electromagnetic energy to skin. The systems and methods include a carrier and an array of electrodes on the carrier, which are connectable to a source of electromagnetic energy to apply the electromagnetic energy. According to this aspect of the invention, a microporous pad on the carrier overlays the array of electrodes, forming an interior chamber to contain an electrically conductive material. The microporous pad is adapted, in use, to contact an epidermal skin region and ionically transport the applied electromagnetic energy to ohmically heat dermal tissue beneath the epidermal skin region.

In one embodiment, the shape of the carrier can differ to match different skin region topographies.

Another aspect of the invention provides systems and methods for applying electromagnetic energy to skin, in which the array of electrodes on the carrier are sized so that, while the carrier contacts an epidermal skin region, the electrodes extend into tissue beneath the epidermal skin region to ohmically heat dermal tissue.

In one embodiment, the electrodes are sized to extend into dermal tissue. In another embodiment, the electrodes are sized to extend into subdermal tissue.

In one embodiment, the shape of the carrier can differ to match different skin region topographies.

Another aspect of the invention provides systems and methods for applying electromagnetic energy to a facelift flap. The systems and methods include a carrier and at least one electrode on the carrier connectable to a source of electromagnetic energy to apply the electromagnetic energy. The electrode is sized so that, while the carrier contacts a backside of the flap, the electrode ohmically heats the dermal tissue.

In one embodiment, the electrode, in use, rests on a surface on the backside of the flap.

In another embodiment, the electrode is sized to extend into dermal tissue within the flap.

Another aspect of the invention provides a family of devices for applying electromagnetic energy to skin. Each device comprising a carrier having a shape and an array of electrodes on the carrier connectable to a source of electromagnetic energy to apply the electromagnetic energy. According to this aspect of the invention, the shapes of the carriers differ to match different skin region topographies.

In one embodiment, the carrier is adapted, in use, to contact epidermal tissue. In this embodiment, the electrodes are sized to extend into tissue beneath the epidermal tissue. The electrodes can be sized to extend into dermal tissue. Alternatively, the electrodes are sized to extend into subdermal tissue.

Features and advantages of the inventions are set forth in the following Description and Drawings, as well as in the appended Claims.

BRIEF DESCRIPTION OF THE DRAWINGS

FIG. **1** is a representative side section view of skin and underlying subcutaneous tissue;

FIG. **2** is a schematic view of a system that, in use, heats collagen tissue in the dermis for the purpose of treating cosmetic conditions affecting the skin;

FIG. **3** is an exploded perspective view of one category of an energy applicator, usable in association with the system shown in FIG. **2**, to transmit energy into the dermis externally through the epidermis;

FIG. **4** is a side section view of the energy applicator shown in FIG. **3** in use to heat collagen tissue in the dermis;

FIG. **5** is a front view of the facial and neck region showing various energy applicator, like that shown in FIG.

3, specially shaped to match the topography of a skin region under the eye, below the ear, under the chin, around the lips, and on the forehead above the eyebrows;

FIG. **6** is an exploded perspective view of another category of an energy applicator, usable in association with the system shown in FIG. **2**, to transmit energy internally directly into the dermis;

FIG. **7** is a side section view of the energy applicator shown in FIG. **6** in use to heat collagen tissue in the dermis;

FIG. **8** is an exploded perspective view, with portions in section, of another category of an energy applicator, usable in association with the system shown in FIG. **2**, to transmit energy into the dermis internally through subcutaneous tissue;

FIG. **9** is a side section view of the energy applicator shown in FIG. **8** in use to heat collagen tissue in the dermis;

FIG. **10** is an exploded, perspective view of another category of an energy applicator, usable in association with the system shown in FIG. **2**, to transmit energy into the dermis from the backside of a surgically created facelift flap.

FIG. **11** is a side section view of the energy applicator shown in FIG. **10** in use to heat collagen tissue in the dermis from the backside of a facelift flap;

FIG. **12** is a perspective view of an energy applicator of the type shown in FIG. **3**, with associated probes for sensing temperature in the dermis;

FIG. **13** is a side section view of an energy applicator shown in FIG. **3**, with the sensors deployed in the dermis to sense temperature conditions;

FIG. **14** is a side section view of an energy applicator of the type shown in FIG. **6**, with associated sensors located in the dermis to sense temperature conditions; and

FIG. **15** is a side section view of a penetration tissue temperature sensing probe of the type shown in FIGS. **12** to **14**, with multiple sensors deployed in a stacked arrangement to sense a temperature gradient in the dermis.

The invention may be embodied in several forms without departing from its spirit or essential characteristics. The scope of the invention is defined in the appended claims, rather than in the specific description preceding them. All embodiments that fall within the meaning and range of equivalency of the claims are therefore intended to be embraced by the claims.

DETAILED DESCRIPTION OF THE PREFERRED EMBODIMENTS

The invention provides systems and methods of treating cosmetic conditions affecting the skin. The system and methods are applicable for use throughout the body. However, the systems and methods are particularly well suited for treating cosmetic conditions in the facial or neck area of the body. For this reason, the systems and methods will be described in this context.

I. Anatomy of the Skin

As FIG. **1** shows, the skin **10** overlies and protects subcutaneous tissue **12** and muscle tissue **14** of the body. In the face and neck areas, the skin **10** measures about 2mm in cross section.

The skin **10** includes an external, non-vascular covering of epithelial cells, called the epidermis **16**. In the face and neck regions, the epidermis measures about 100 μm in cross section.

The skin **10** also includes a layer of vascular tissue, named the dermis **18**. In the face and neck regions, the dermis **18** measures about 1900 μm in cross section.

The dermis **18** is tough, flexible, and highly elastic. It is divided into a papillary (upper) layer **20** and a reticular (lower) layer **22**. The most numerous fibers in the papillary and reticular layers **20** and **22** are collagen fibers, which in large part account for the strength and physical properties of the dermis **18**. Hair bulbs, sweat ducts, and other glands also occupy the reticular layer **22**.

The fibrous structure of collagen tissue is observed to dissociate and contract along its length when heated to a defined temperature condition, i.e., about 65° C. The contraction of collagen tissue causes the dermis **18** to reduce in size, which has an observable tightening effect. As collagen contacts, wrinkles and sag lines in the skin are ameliorated. As a result, the outward cosmetic appearance of the skin **10** improves.

The temperature conditions conducive to the beneficial results of collagen shrinkage lay well above the temperature conditions at which irreversible thermal damage to epithelial cells begins to occur, i.e., above about 47° C.

II. Systems for Renovating the Dermis

A. System Overview

FIG. **2** shows a system **24** for renovating and reconstituting the dermis. The system **24** applies energy to the dermis to elevate and maintain its temperature at a predetermined temperature condition, at or about 65° C., without increasing the temperature of the epidermis beyond 47° C. In this way, the system applies energy to the dermis in a targeted, selective fashion, to dissociate and contract collagen tissue, while preserving and protecting epithelial cells against thermal damage.

The system **24** includes a treatment device **26**. The device **26** includes a handle **28** made, e.g., from molded plastic. The handle **28** carries at its distal end a treatment energy applicator **30**, which, in use, contacts the epidermis. The handle **28** is sized to be conveniently grasped like a pencil or paint brush by a physician, to thereby manipulate the applicator **30** on the epidermis **16**.

The system **24** further includes a device **32** to generate treatment energy. In the illustrated embodiment, the generator **32** generates radio frequency energy, e.g., having a frequency in the range of about 400 kHz to about 10 mHz.

A cable **34** extending from the proximal end of the handle **28** terminates with an electrical connector **36**. The cable **34** is electrically coupled to the applicator **30**, e.g., by wires that extend through the interior of the handle **28**. When connector **36** plugs into the generator **32**, to convey the generated energy to the applicator **30** for transmission to the skin.

The system **24** also includes certain auxiliary processing equipment **38** and **40**. In the illustrated embodiment, the processing equipment **38** comprises an external fluid delivery apparatus, and the processing equipment **40** comprises an external aspirating apparatus.

The handle **28** of the treatment device **26** includes one or more interior lumens **42**. The lumens terminate in fittings **44** and **46**, located at the proximal end of the handle **28**. One fitting **44** connects to the fluid delivery apparatus **38**, to convey processing fluid to the distal end of the handle **28** for discharge. The other fitting **46** connects to the aspirating apparatus **40**, to convey aspirated material from the distal end of the handle **28** for discharge.

The system **24** also includes a controller **48**. The controller **48**, which preferably includes a central processing unit (CPU), is linked to the generator **32**, the fluid delivery apparatus **38**, and the aspirating apparatus **40**. The controller **48** governs the power levels, cycles, and duration that the radio frequency energy is distributed to the applicator **30**, to achieve and maintain power levels appropriate to achieve

the desired treatment objectives. In tandem, the controller **48** also governs the delivery of processing fluid to the applicator **30** and the removal of aspirated material from the applicator **30**.

The controller **48** includes an input/output (I/O) device **50**. The I/O device **50** allows the physician to input control and processing variables, to enable the controller **48** to generate appropriate command signals. The I/O device **50** also receives real time processing feedback information from one or more sensors **52** associated with the applicator, for processing by the controller **48**, e.g., to govern the application of energy and the delivery of processing fluid. The I/O device **50** also includes a display **54**, to graphically present processing information to the physician for viewing or analysis.

B. The Treatment Device

The structure of the treatment device **26** and associated electrical energy applicator **30** can vary.

The illustrated embodiments describe and show four representative categories of energy applicators **30**, as follows:

(i) a first category applicator **30**(1) (shown in FIGS. **3** and **4**) transmits energy into the dermis externally through the epidermis.

(ii) a second category applicator **30**(2) (shown in FIGS. **6** and **7**) transmits energy internally directly into the dermis.

(iii) a third category applicator **30**(3) (shown in FIGS. **8** and **9**) transmits energy into the dermis internally through subcutaneous tissue.

(iv) a fourth category applicator **30**(4) (shown in FIGS. **10** and **11**) transmits energy into the dermis from the backside of a surgically created facelift flap.

The various categories of energy applicators **30**(1), **30**(2), **30**(3), and **30**(4) will now be discussed in greater detail.

(i) EPIDERMAL ENERGY APPLICATOR

In this category, as shown in FIG. **3**, the energy applicator **30**(1) includes a carrier grid **56**, which is mounted on the distal end of the handle **28**. The carrier grid **56** is made from an electrically non-conducting material, e.g., plastic or ceramic.

The carrier grid **56** carries a pattern of multiple, spaced apart electrodes **58**. Each electrode **58** comprises a discrete transmission source of radio frequency energy. The electrodes **58** can be made, e.g., from stainless steel, platinum, and other noble metals, or combinations thereof. The electrodes **58** may be fastened to the grid by various means, e.g., by adhesives, by painting, or by other coating or deposition techniques.

In the illustrated embodiment, the carrier grid **56** is formed by an outside frame **60** with crossing interior spacers **62**. Together, the frame **60** and spacers **62** define an open lattice of cells **64**. In the illustrated embodiment, the grid **56** defines sixteen cells **64**. It should be appreciated that the cells **64** could number more or less than sixteen.

In the illustrated embodiment, the electrodes **58** are located on the grid **56** at the four corners of each cell **64**. This arrangement provides a symmetric pattern of twenty-five electrodes **58** on the grid **56**. Still, it should be appreciated that the electrodes **58** could be arranged in other symmetric or nonsymmetric patterns in the grid.

In the embodiment shown in FIG. **3**, the energy applicator **30**(1) includes an external pad **66**, which is attached peripherally about the carrier grid **56**. The pad **66** is made from a resilient microporous membrane. As FIG. **4** shows, the pad **66**, in use, makes surface contact with the epidermis **16**. The resilience of the pad **66** makes it well suited to conform to a variable surface topography of the epidermis **16**.

The attachment of the pad about the carrier grid **56** creates an interior chamber **68**, which encloses the grid **56**. The applicator **30**(1) further includes a fluid manifold **70** inside the chamber **68**. The fluid manifold **70** communicates with the fluid delivery apparatus **38**, via the handle lumens **42**. The manifold **70** uniformly introduces processing fluid through the grid **56** and into the interior chamber **68**.

In this arrangement, the processing fluid comprises an electrically conductive liquid, such as saline (about 0.9% to 3.0%). The apparatus **38** includes a pump **72** to convey the electrically conductive liquid through the manifold **70** at a prescribed rate.

The flow of the electrically conductive liquid into the through the grid **56** and into interior chamber **68** contacts the interior surface of the microporous membrane of the pad **66**. As FIG. **4** shows, the microporous membrane of the pad **66** has pores **74** sized to permit passage of the electrically conductive fluid in the chamber **68** through the membrane and into contact with the epidermis **16** the membrane contacts.

The diffusion of electrically conductive liquid through the membrane pores **74** serves two purposes. First, it creates conductive cooling at the interface between the membrane pad **66** and the epidermis **16**. Second, it serves to ionically transport radio frequency energy transmitted by the grid electrodes **58** through the membrane pores **74**, for return (in a unipolar arrangement) through exterior patch electrode **76** coupled to patient ground.

The ionically conducted radio frequency energy transported through the membrane pore **74** will, in turn, cause localized ohmic heating of skin tissue. The application of radio frequency energy by ionic transport to the epidermis surface, simultaneously combined with the conductive surface cooling effects that the ionic transport also provides, places the tissue region where maximum temperature conditions exist (designated TMAX in FIG. **4**) at a location below the epidermis **16**, into the papillary dermis **20** and, preferably, into the reticular dermis **22** as well.

The applicator **30**(1) thereby makes possible selective heating of the interior dermis **18** to a maximum tissue temperature TMAX of about 65° C., while maintaining the temperature of the epidermis **16** at or about 20° C. to 30° C., thereby avoiding thermal damage to the epidermis **16**.

Alternatively, an electrically conductive jelly can occupy the interior chamber **68**. The jelly causes ionic transport of radio frequency energy through the membrane pores **74**. In this arrangement, a manifold **78** distributes fluid about the periphery of the pad **66**, but not into the chamber **68** itself, to nevertheless cause convective surface cooling effects. In this arrangement, the fluid distributed by the manifold **78** need not be electrically conductive, but it can be to provide uniform distribution of the radio frequency energy at the pad **66**.

In use, the physician places the pad **66** upon a targeted region of tissue. The controller **48** governs the application of radio frequency energy to the electrodes **58** in concert with the delivery of fluid to the manifold **70** (or **78**), to control the desired epidermal and dermal tissue temperature conditions. The controller **48** can also govern the withdrawal of fluid from the vicinity of the pad **66** through the aspirating apparatus **40** for this purpose. The controller **48** can alter the distribution of the radio frequency energy among selected

sets or subsets of one or more grid electrodes **58**. In this way, the controller **48** can focus the application of radio frequency in selected patterns.

In maintaining control of the process, the controller **48** can depend upon empirically determined or modeled relationships among selected processing variables, including, e.g., tissue temperature, time, power, and fluid delivery rate, without actual temperature sensing. Preferably, however, localized tissue temperature conditions are sensed to provide direct feedback control, as will be described in greater detail later.

In the illustrated embodiment, the handle **28** and grid **56** can comprise reusable components. In this arrangement, the energy applicator pad **66** can comprise a single use component that is temporarily fastened to the handle **28** at time of use, e.g., by a conventional snap-fit, and then removed after use for disposal.

The pad **66** need not be sized to cover a targeted facial or neck region in its entirety. Instead, the physician can locate the pad **66** in contact with a localized area of epidermal tissue within a targeted region. After applying the desired amount of radio frequency energy, the physician can relocate the pad **66** to an adjacent tissue area in the targeted region and again apply radio frequency energy. The physician can repeat this successive process, until the entire targeted region has been subject to treatment by exposure to radio frequency energy.

The energy applicator pads **66** can be specially shaped and contoured to provide different geometries, selected to match the topography of the targeted facial or neck region, e.g., under the eye (as pad **66**(1) in FIG. **5** shows); or below the ear (as pad **66**(2) in FIG. **5** shows); or under the chin (as pad **66**(3) in FIG. **5** shows); or around the lips (as pad **66**(4) in FIG. **5** shows); or on the forehead above the eyebrows (as pad **66**(5) in FIG. **5** shows).

(ii) INTRADERMAL ENERGY APPLICATOR

As shown in FIG. **6**, the second category of energy applicator **30**(2) includes a carrier **80** on the distal end of the handle **28**. The carrier **80** supports an array of spaced-apart needle electrodes **82**. The electrodes **82** are metallic, being made, e.g., from stainless steel, platinum, other noble metals, or combinations thereof. Each electrode **82** comprises a discrete transmission source of radio frequency energy, which the controller **48** governs.

The carrier **80** can provide physical connections between control wires and each electrode **82**, e.g., by solder or adhesive. Alternatively, the carrier **80** can have painted, coated, or otherwise deposited solid state circuitry to provide the electrical paths. The solid state circuitry can include a fuse element that interrupts electrical contact after a specified period of use, to thereby discourage reuse of the carrier **80**.

In use (as FIG. **7** shows), the electrodes **82** are intended to be inserted as a unit on the carrier **80** through the epidermis **16** and into the dermis **18**. After insertion, the controller **48** conditions the electrodes **82** for operation in a unipolar mode. In this mode, energy transmitted by one or more of the electrodes **82** is returned by an indifferent patch electrode **84**, which is coupled to patient ground.

Alternatively, the controller **48** can condition pairs of electrodes **82** to operate in a bipolar mode, with one electrode serving to transmit radio frequency energy, and the other electrode serving as the return path.

The size and spacing of the electrodes **82** shown in FIGS. **10** and **11** are purposely set to penetrate the skin to a depth sufficient to pass entirely through the epidermis **16** and penetrate the papillary and, preferable, extend into the reticular dermis (e.g., about 200 μm to 300 μm). When used for this purpose, the electrodes **82** each possesses a total length of about 0.5 to about 3.0 mm. The electrodes are mutually spaced apart by about 0.5 mm to 10.0 mm.

An electrical insulating material **86** surrounds the proximal end of each electrode **82** by at least 0.5 mm. This leaves an exposed, non-insulated length at the distal end of about 0.5 mm to 2.5 mm. The insulating material **82** insulates the epidermis **16** and a portion of the dermis **18** from direct exposure to radio frequency energy transmitted by the exposed distal end.

The ratio between exposed and insulated regions on the electrodes **82** affects the impedance of the electrodes **82** during use. Generally speaking, the larger the exposed region is compared to the insulated region, a larger impedance value can be expected.

In use, the physician places the carrier **80** upon a desired region of tissue. The physician applies light pressure on the handle **28** to insert the needle electrodes **82** through the epidermis **16** and into the dermis **18**. The controller **48** governs the application of radio frequency energy to the electrodes **82** to ohmically heat adjacent dermal tissue. The electrodes **82** can be operated individually or in groups to form defined energy application patterns. As before described, the controller **48** can depend upon the empirically determined or modeled relationships among processing variables to affect process control, with or without actual temperature sensing.

In this arrangement, the handle **28** can comprise a reusable component, and the carrier **80** with electrodes **82** can comprise a single use component, which is temporarily fastened to the distal end of the handle **28** for use and then removed after use for disposal.

As with the pad **66**, the carrier **80** need not be sized to cover a targeted facial or neck region in its entirety. Instead, the physician can successive locate the carrier **80** in a localized areas within a targeted region, and apply radio frequency energy to each localized area.

Like the pad **66**, the carrier **80** can also be specially shaped and contoured to provide different geometries, selected to match the topography of the targeted facial or neck region, as shown in FIG. **5**.

(iii) SUBDERMAL ENERGY APPLICATOR

As shown in FIG. **8**, the third category of energy applicator **30**(3) includes a carrier **88** mounted on the distal end of the handle **28**. Like the carrier **80** shown in FIG. **6**, the carrier **88** shown in FIG. **8** holds an array of spaced-apart, metallic needle electrodes **90**. Each electrode **90** comprises a discrete transmission source of radio frequency energy, which the controller **48** governs.

As before explained, the carrier **88** can provide physical connections between control wires and each electrode **90**, or carry painted, coated, or otherwise deposited solid state circuitry to provide the electrical paths.

As FIG. **9** best shows, the needle electrodes **90** shown in FIG. **8** differ from the electrode **82** in FIG. **6** in that they are longer than the needle electrodes **82**. The longer electrodes **90** are intended to be inserted as a unit through both the epidermis **16** and the dermis **18**, and extend into the subcutaneous tissue region **12** a short distance beyond the reticular dermis **22**.

For this purpose, the electrodes **90** each possesses a total length of about 3.0 mm to 10.0 mm. The electrodes **90** are mutually spaced apart by about 0.5 mm to 3.0 mm. An electrical insulating material **92** surrounds the proximal end of each electrode **90** by at least 2.0 mm. This leaves an exposed, non-insulated length at the distal end of each electrode **90** of about 3.0 mm to 4.0 mm. The insulating material **92** insulates the epidermis **16** and dermis **18** from direct exposure to radio frequency energy transmitted by the exposed distal ends of the electrodes **90**.

In the illustrated embodiment, at least some, and preferably all, of the needle electrodes **90** include interior fluid passages **94** (see FIG. **8**). A manifold **96** couples a select number of the passages **94** in communication with the fluid delivery apparatus **38**. This way, processing fluid can be introduced through the electrodes **90** and into the subcutaneous tissue surrounding the distal ends of the electrodes **90**. The manifold **96** couples other passages **94** in communication with the aspirating device **40**, to evacuate material through the distal ends of the electrodes **90**.

In this embodiment, the processing fluid comprises an electrically conductive liquid, such as saline. The apparatus **38** includes a pump **72** (see FIG. **1**) to convey the electrically conductive liquid to the manifold **96** at a prescribed rate. The manifold **96** disperses the electrically conductive liquid through the selected passages **94**.

The controller conditions the electrodes **90** to operate in a unipolar mode. Energy transmitted by one or more of the electrodes **90** is returned by an indifferent patch electrode **100**, which is coupled to patient ground (see FIG. **9**). At the same time, electrically conductive liquid flows through the selected passages **94** into the surrounding subcutaneous tissue region **12** (shown by arrows **122** in FIG. **9**), while liquid and other material is evacuated through the other passages **94** by the aspirating device **40** (as shown by arrows **124** in FIG. **9**).

The radio frequency energy transmitted by the exposed, distal ends of the electrodes **90** will cause localized ohmic heating of subcutaneous tissue. The conduction of the electrically conductive fluid ionically distributes the radio frequency energy in a uniform manner, while also providing a localized cooling effect. The cooling effect places the tissue region where maximum temperature conditions exist at a location (designated TMAX in FIG. **9**) spaced from the distal ends of the electrodes **90**, which includes the reticular dermis **22**.

The localized heating effects will all cause fat tissue **102** in the subcutaneous tissue **12** to flow (see FIG. **9**). Suction applied by the aspirating device **40** through the passages **94** can be used to evacuate flowing fat tissue from subcutaneous tissue **12** (as arrows **124** in FIG. **9** show). This provides localized liposuction effects in the subcutaneous region **12**, in tandem with collagen heating effects in the dermis **18**.

In use, the physician places the carrier **88** upon a desired region of tissue. The physician applies light pressure on the handle **18** to insert the needle electrodes **90** through the epidermis **16** and dermis **18** and into a subcutaneous tissue region **12**. The controller **48** governs the application of radio frequency energy to the electrodes **90**, which can be operated individually or in defined patterns.

The carrier **88** need not be sized to cover an entire targeted region. The physician can locate the carrier **88** in successive local areas within a targeted region, and apply radio frequency energy to each localized area. Like the pad **66**, the carrier **88** can also be specially shaped and contoured to provide different geometries, selected to match the topography of the targeted facial or neck region, as shown in FIG. **5**.

As before described, the controller **48** can depend upon the empirically determined or modeled relationships among processing variables to affect process control, with or without actual temperature sensing.

In this embodiment, as in the preceding embodiment, the handle **28** can comprise a reusable component, and the carrier **88** and needle electrodes **90** can comprise a single use component that is temporarily fastened to the handle **28** for use and then removed after use for disposal.

(iv) FACELIFT FLAP ENERGY APPLICATOR

As shown in FIG. **10**, the fourth category of energy applicator **30**(4) likewise includes a carrier **104** on the distal end of the handle **28**. The carrier **104** holds a pair of bipolar metallic electrodes **106**. In use, energy transmitted by one of the electrodes **106** is returned by the other electrode **106** to patient ground. Alternatively, the carrier **104** can hold an array of several needle electrodes, which are operated in either a bipolar or unipolar mode.

In use (see FIG. **11**), the physician surgically creates a facelift flap **108** in the targeted tissue region. The flap **108** extends well into the dermis **18** (e.g., 200 μm to 300 μm). The physician inserts the needle electrodes **106** into the backside of the flap **108** and applies radio frequency energy.

The size and spacing of the electrodes **106** are purposely set to penetrate into the backside of the skin flap **108** to a depth sufficient to locate the distal ends of the electrodes **106** in dermal tissue.

When used for this purpose, the electrodes **106** each possesses a total length of about 3.0 mm to 8.0 mm. The electrodes **106** are mutually spaced apart by about 0.5 mm to 10.0 mm.

Alternatively, in this embodiment, the applicator **30**(4) can comprise an array of surface electrodes **106** that do not penetrate the skin flap **108**, but which rest on the surface of the backside of the skin flap.

As before described, the controller **48** governs application of radio frequency energy to achieve the desired tissue effects.

In this embodiment, as in preceding embodiments, the handle **28** can comprise a reusable component, and the carrier **104** and electrodes **106** can comprise a single use component that is temporarily fastened to the handle for use and then removed after use for disposal.

C. Dermal Temperature Sensing

In all of the preceding embodiments, the controller **48** preferable relies upon sensing tissue temperature conditions as a form of active process feedback control.

For this purpose, the energy applicator carries at least one sensor **112** (see FIG. **12**), which senses tissue temperature conditions. In the illustrated embodiment, the at least one sensor **112** is located beneath the epidermis **16** and into the dermis **18** (see FIG. **13**), to sense actual tissue temperature conditions in the dermis **18**.

When used in association with the applicator pad **66** of the category (i) applicator **30**(1)(as FIG. **12** shows), an array of probes **114** is arranged in a spaced-apart relationship along the periphery of the pad **66**. Each probe **114** carries at least one temperature sensor **112**. In use, the probes **114** extend through the epidermis **16** and into the dermis **18**, as FIG. **13** shows.

When use in association with a penetrating needle electrode **82**, **90**, or **106**, (see FIG. **14**) each needle electrode **82**,

90, or 106 can carry at least one temperature sensor 112. Alternatively, of course, probes could be used to carry the sensors 112, in the manner shown in FIGS. 12 and 13. In any event, the sensors 112 are located so that, in use, they are positioned in the region of the dermis 118 where radio frequency heating is targeted, as FIG. 14 shows.

In the embodiment shown in FIG. 15, a tissue penetrating probe 116 (or needle electrode, as the case may be) may support a vertically stacked array 118 of temperature sensors 120. The temperature sensors 120 are arranged at known, fixed intervals along the probe 116. The stacked sensors 120 sense a dermal tissue temperature gradient along the length of the probe 116.

The sensing of a temperature gradient within dermal tissue targeted for radio frequency heating permits the controller 48 to identify along the gradient the location of the maximum tissue temperature region TMAX. For control purposes, the controller 48 can include an algorithm that selects the maximum tissue temperature TMAX and also identifies the depth D(TMAX) at which the maximum tissue temperature occurs. By varying the power of radio frequency energy applied and the rate of surface cooling (when appropriate), the controller 48 can adjust the maximum tissue temperature TMAX to achieve the desired control point temperature, which for collagen shrinkage is 65° C. The controller 48 can also establish and maintain a control depth (D(TMAX) at which the desired control point temperature occurs, e.g., at a skin depth of 200 μm to 300 μm (pre-set or set by the physician), to achieve optimal collagen shrinkage.

Various features of the invention are set forth in the following claims.

We claim:

1. A method for applying electromagnetic energy to skin comprising the steps of

providing a carrier, an array of electrodes on the carrier connectable to a source of electromagnetic energy to apply the electromagnetic energy, and a microporous pad on the carrier overlying the array of electrodes forming an interior chamber to contain an electrically conductive material, and

placing the microporous pad in contact with an epidermal skin region while applying the electromagnetic energy with the electrodes to tonically transport the applied electromagnetic energy through the microporous pad to ohmically heat dermal tissue beneath the epidermal skin region.

2. A method according to claim 1

further including the step of circulating the electrically conductive material in the interior chamber while applying the electromagnetic energy.

3. A method according to claim 1

further including the step of distributing liquid about the microporous pad while applying the electromagnetic energy.

4. A method according to claim 1

further including the step of sensing temperature while applying the electromagnetic energy.

5. A method according to claim 4

wherein the temperature sensing step includes sensing temperature of dermal tissue beneath the epidermal tissue region.

6. A device for applying electromagnetic energy to skin comprising:

a carrier,

an array of electrodes on the carrier connectable to a source of electromagnetic energy to apply the electromagnetic energy,

a microporous pad on the carrier overlying the array of electrodes forming an interior chamber to contain an electrically conductive material, the microporous pad adapted, in use, to contact an epidermal skin region and ionically transport the applied electromagnetic energy to ohmically heat dermal tissue beneath the epidermal skin region, and

at least one temperature sensing probe on the carrier and located outside the microporous pad.

7. A device for applying electromagnetic energy to skin comprising:

a carrier,

an array of electrodes on the carrier connectable to a source of electromagnetic energy to apply the electromagnetic energy,

a microporous pad on the carrier overlying the array of electrodes forming an interior chamber to contain an electrically conductive material, the microporous pad adapted, in use, to contact an epidermal skin region and ionically transport the applied electromagnetic energy to ohmically heat dermal tissue beneath the epidermal skin region, and

at least one temperature sensing probe on the carrier and sized to extend into dermal tissue when the microporous pad contacts the epidermal tissue region.

8. A method for applying electromagnetic energy to skin comprising the steps of:

providing a carrier, an array of electrodes on the carrier connectable to a source of electromagnetic energy to apply the electromagnetic energy, the electrodes being sized so that, while the carrier contacts an epidermal skin region, the electrodes extend into tissue beneath the epidermal skin region,

placing the carrier in contact with an epidermal skin region while applying the electromagnetic energy with the electrodes to ohmically heat tissue beneath the epidermal skin region, and

conveying a liquid through an interior passage in at least some of the electrodes while applying the electromagnetic energy.

9. A method for applying electromagnetic energy to skin comprising the steps of:

providing a carrier, an array of electrodes on the carrier connectable to a source of electromagnetic energy to apply the electromagnetic energy, the electrodes being sized so that, while the carrier contacts an epidermal skin region, the electrodes extend into tissue beneath the epidermal skin region,

placing the carrier in contact with an epidermal skin region while applying the electromagnetic energy with the electrodes to ohmically heat tissue beneath the epidermal skin region, and

sensing temperature while applying the electromagnetic energy.

10. A method according to claim 9

wherein the temperature sensing step includes sensing temperature of dermal tissue beneath the epidermal tissue region.

* * * * *