US 20080091182A1

(19) United States

(12) Patent Application Publication

Mehta

(10) Pub. No.: US 2008/0091182 A1

(43) Pub. Date: Apr. 17, 2008

(54) METHODS AND DEVICES FOR TREATING TISSUE

(75) Inventor: **Bankim H. Mehta**, San Ramon, CA (US)

Correspondence Address:
LEVINE BAGADE HAN LLP
2483 EAST BAYSHORE ROAD, SUITE 100
PALO ALTO, CA 94303

(73) Assignee: **Primaeva Medical. Inc.**, Menlo Park, CA (US)

(21) Appl. No.: **11/676,230**

(22) Filed: **Feb. 16, 2007**

Related U.S. Application Data

(60) Provisional application No. 60/829,607, filed on Oct. 16, 2006.

Publication Classification

(51) **Int. Cl.**
A61B 18/14 (2006.01)

(52) **U.S. Cl.** **606/29**

(57) **ABSTRACT**

The invention provides a system and method for achieving the cosmetically beneficial effects of shrinking collagen tissue in the dermis or other areas of tissue in an effective, non-invasive manner using an array of electrodes. Systems described herein allow for improved treatment of tissue. Additional variations of the system include array of electrodes configured to minimize the energy required to produce the desired effect.

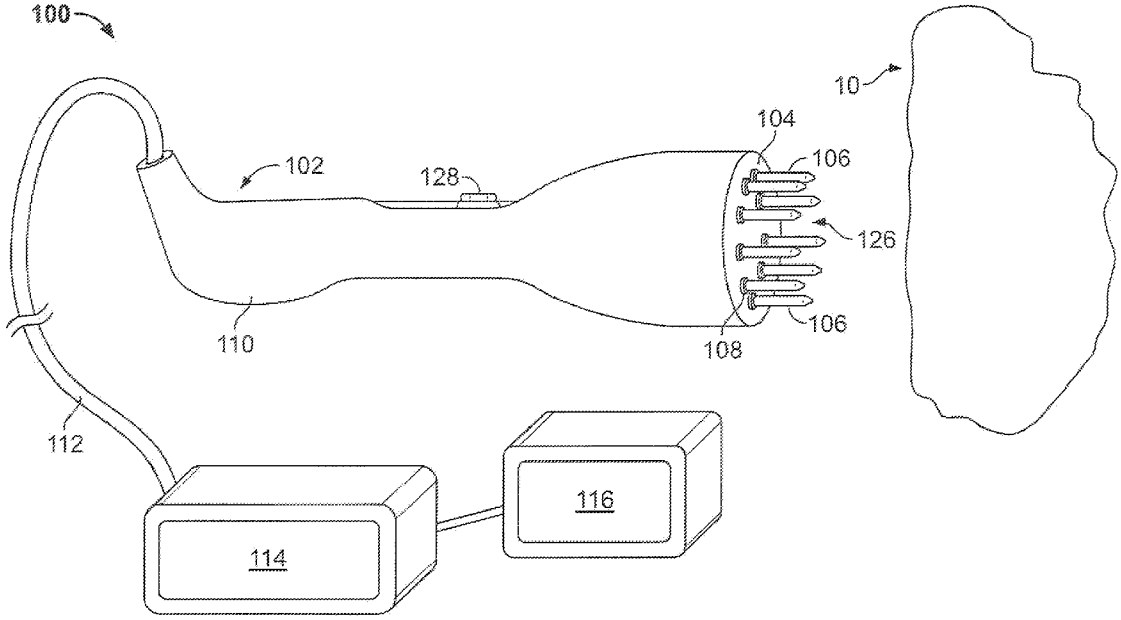

Serendia, LLC
Exhibit 2143
EndyMed v. Serendia
IPR2024-00845
Ex. 2143-001

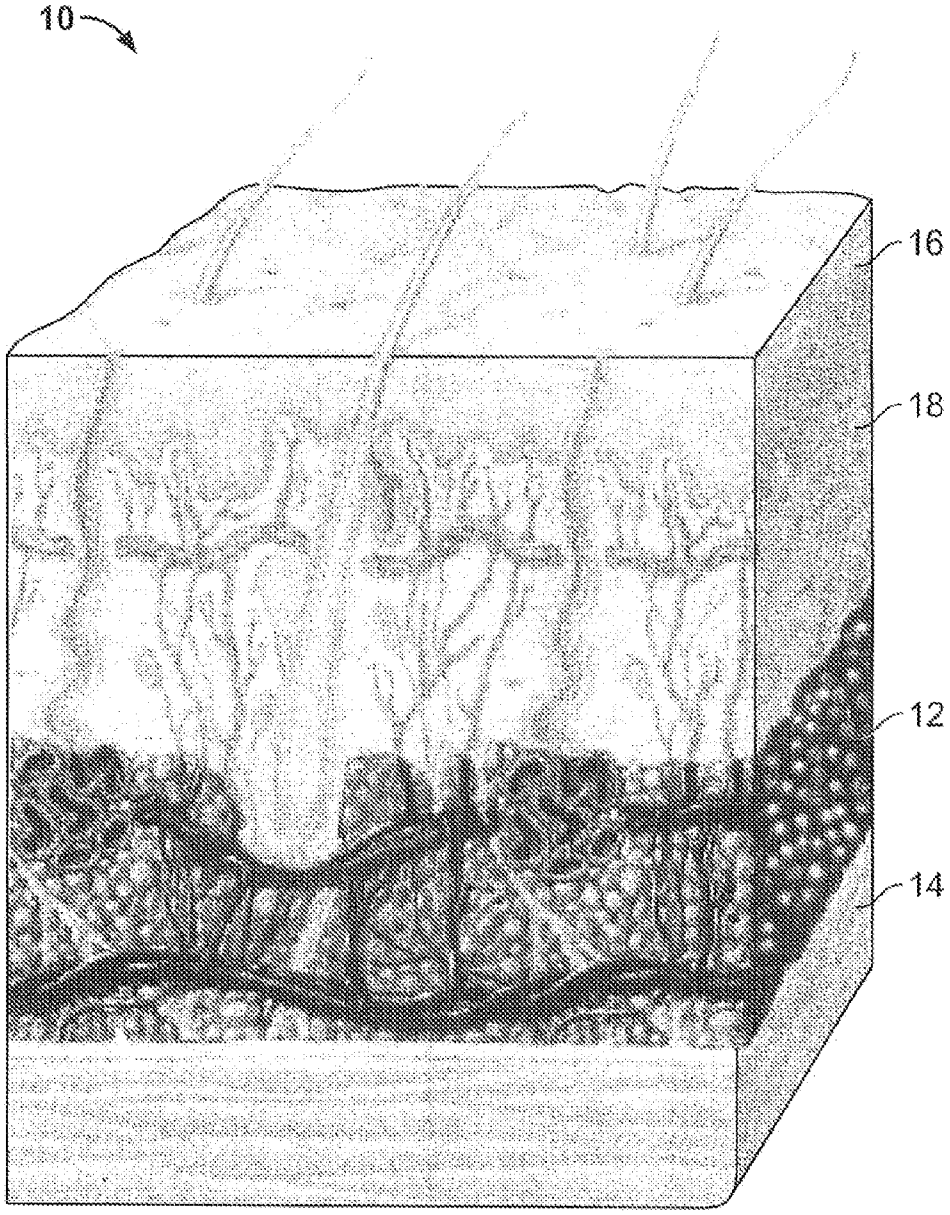

FIG. 1

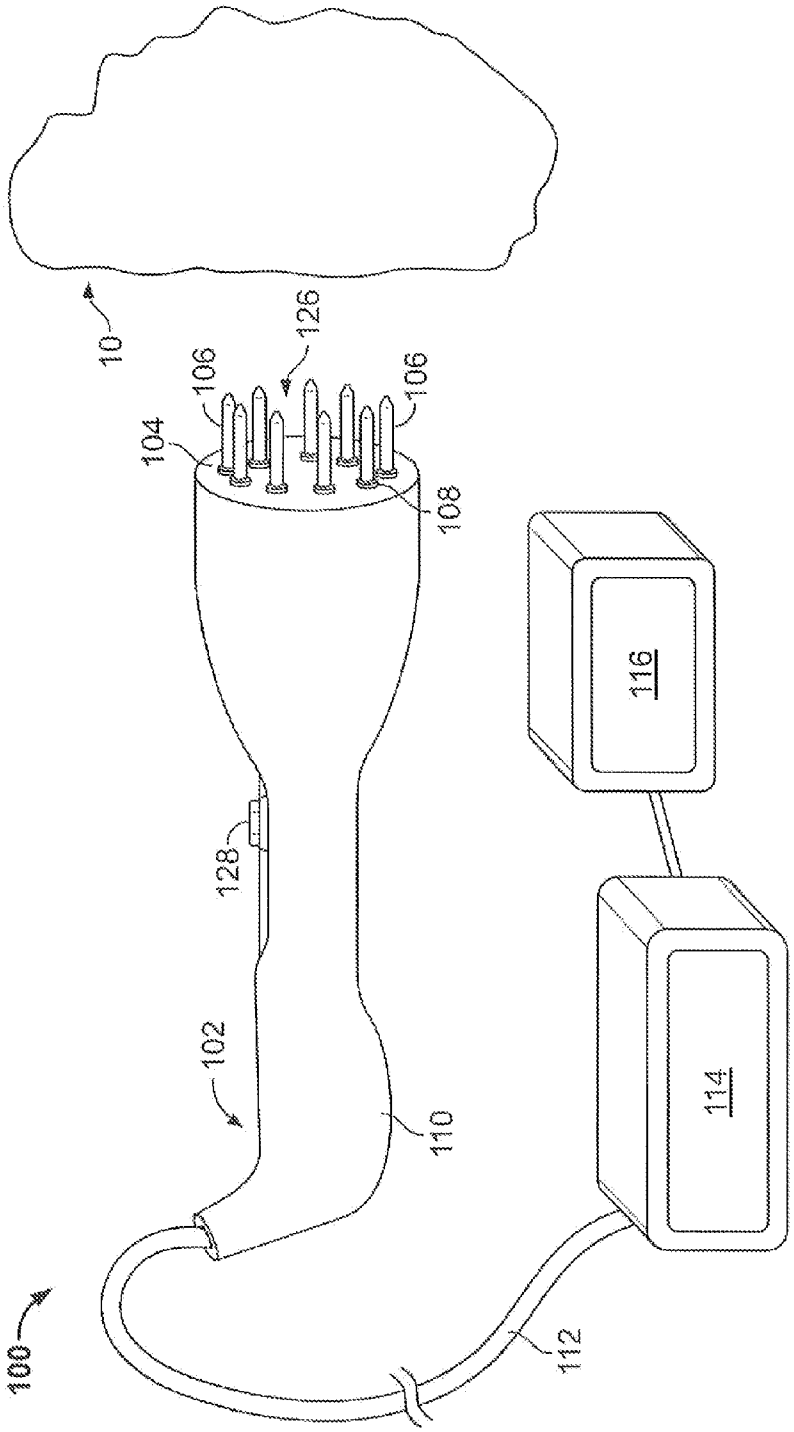

FIG. 2A

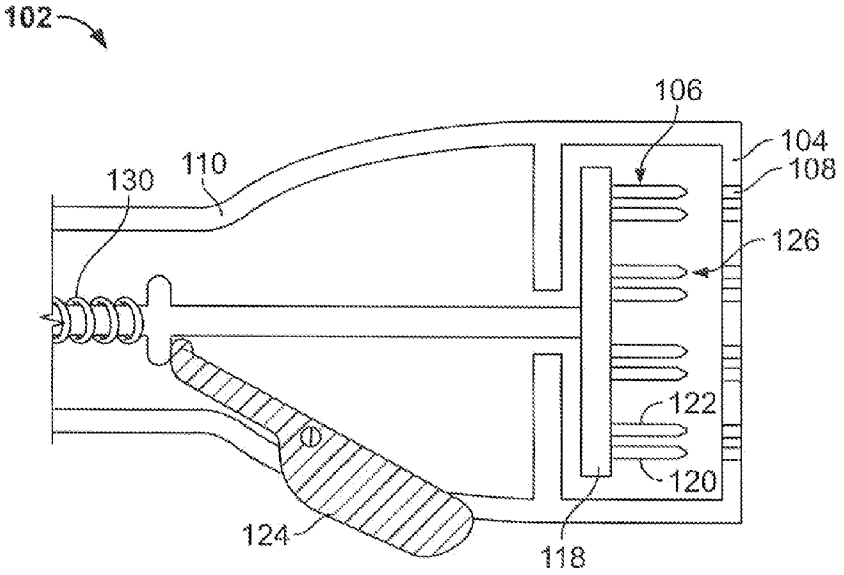
102
106
104
108
130
110
126
122
120
124
118

FIG. 2B

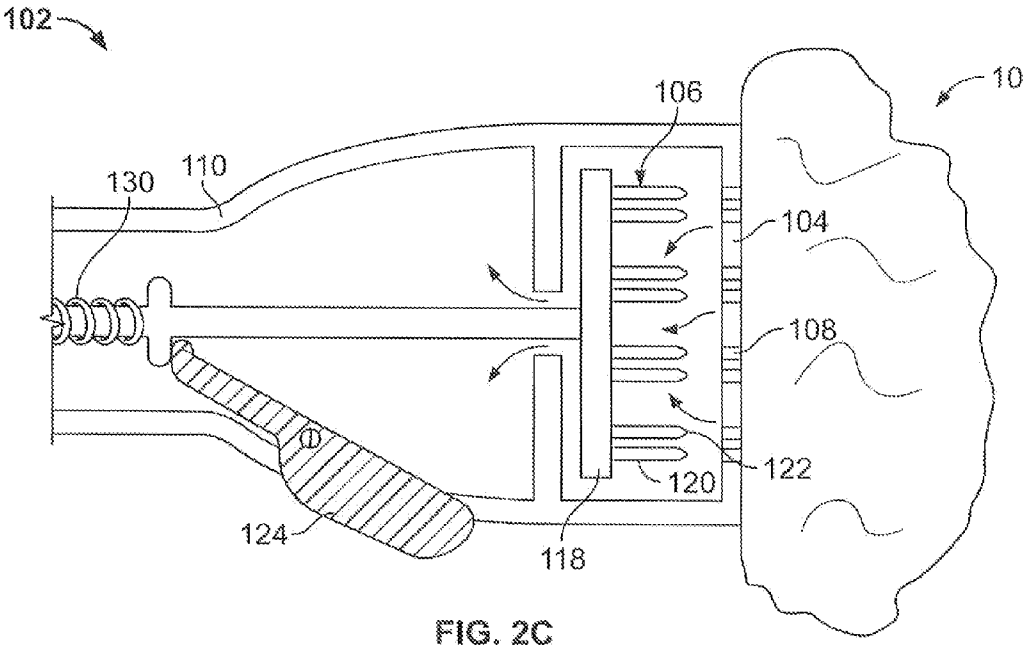
102
10
106
130
110
104
108
122
120
124
118

FIG. 2C

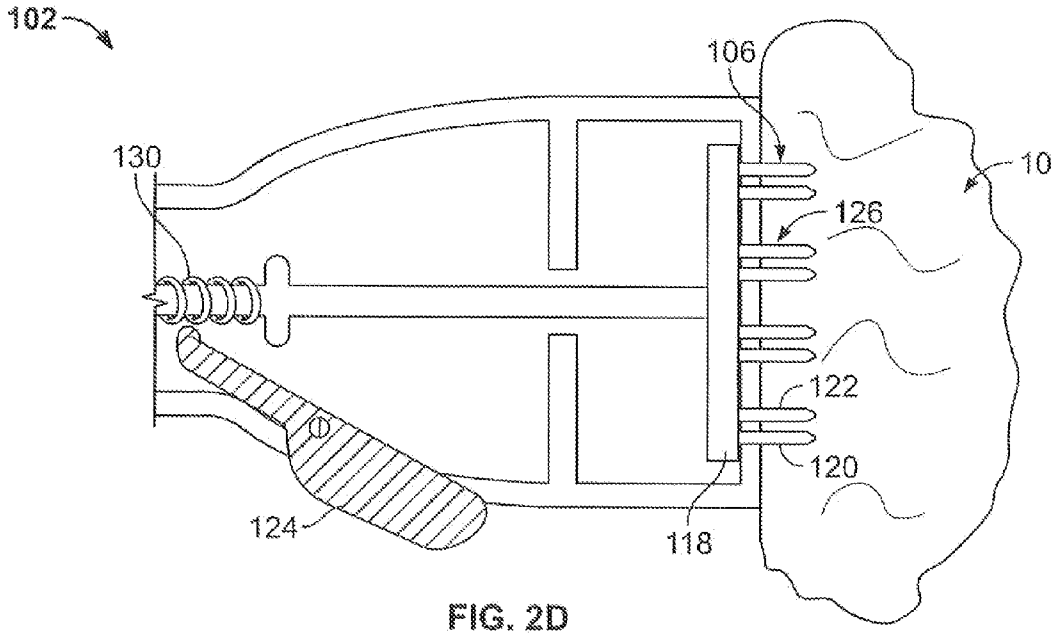

FIG. 2D

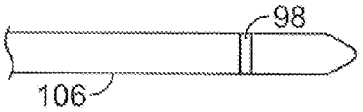

FIG. 2E

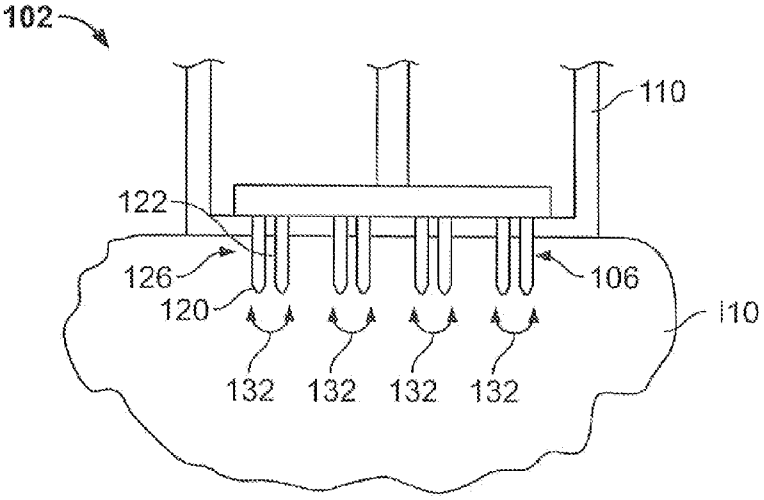

FIG. 2F

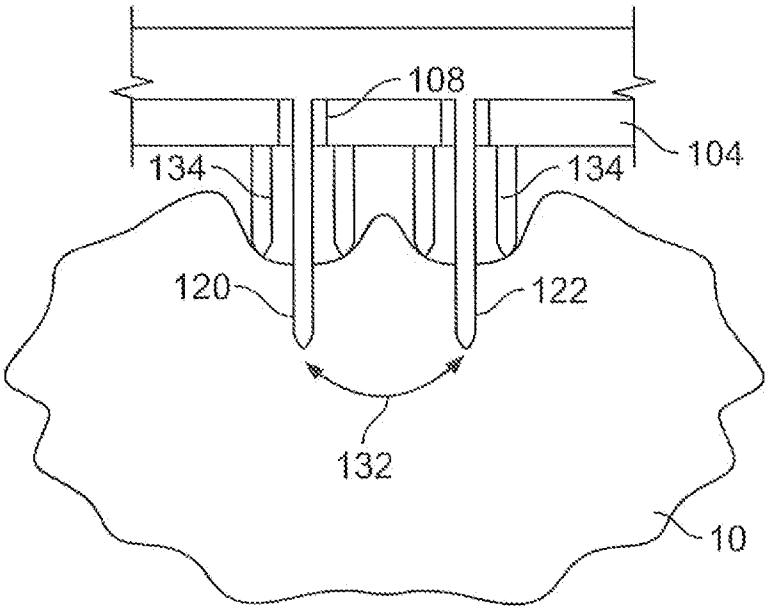

FIG. 3A

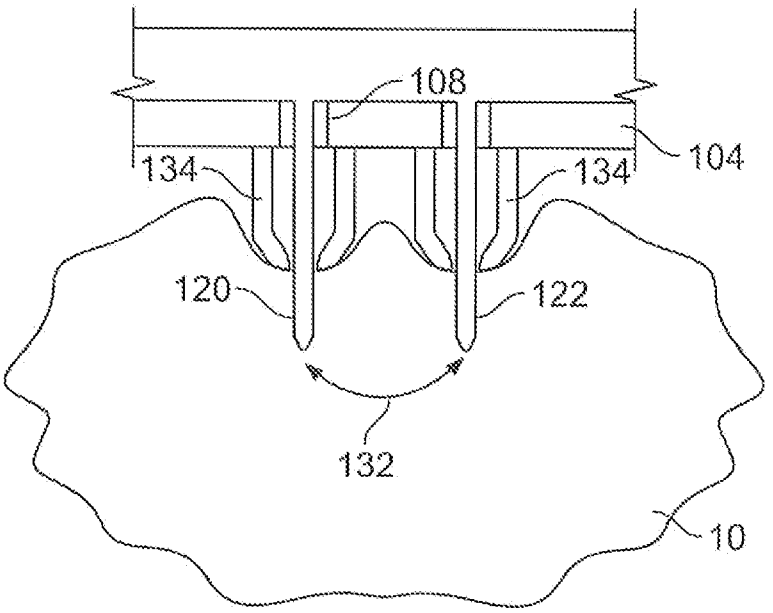

FIG. 3B

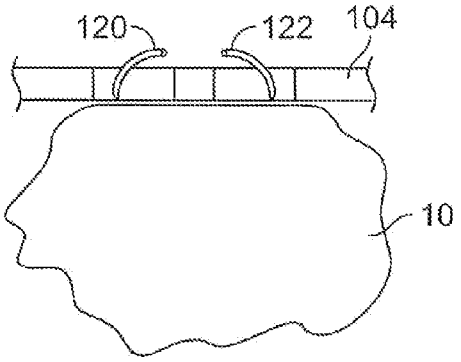

FIG. 4A

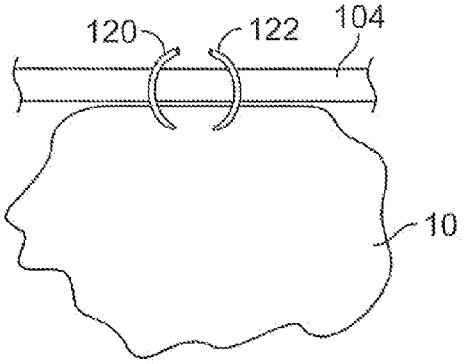

FIG. 4B

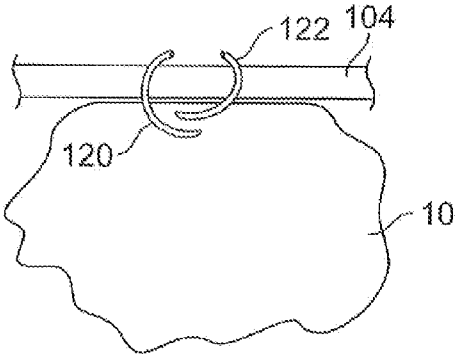

FIG. 4C

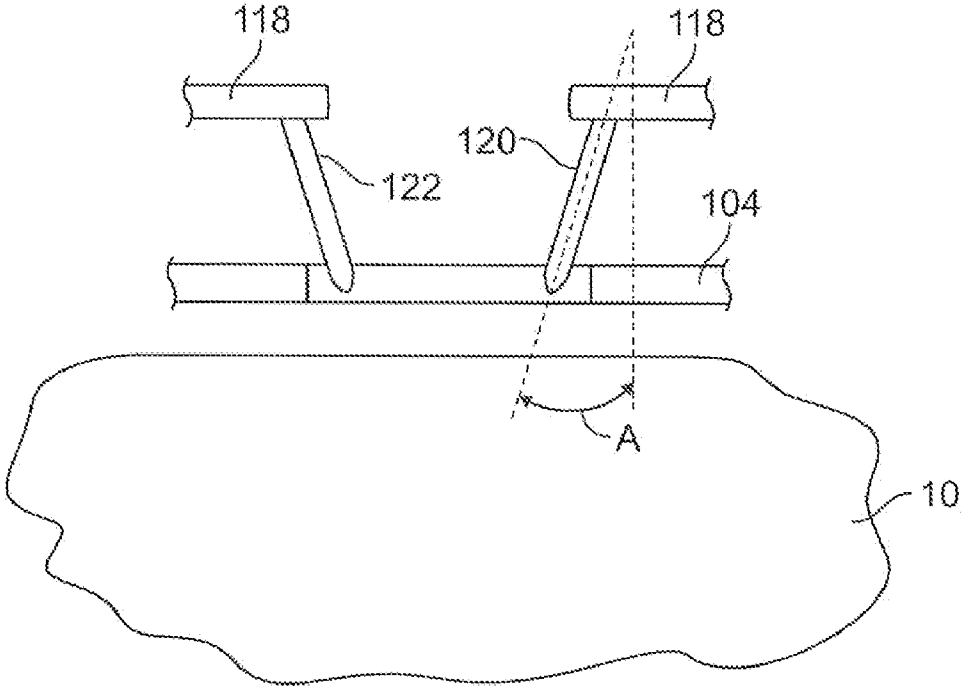

FIG. 5A

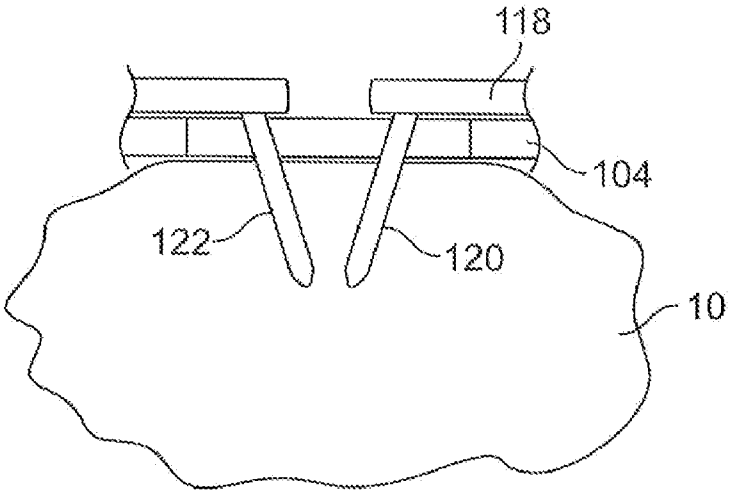

FIG. 5B

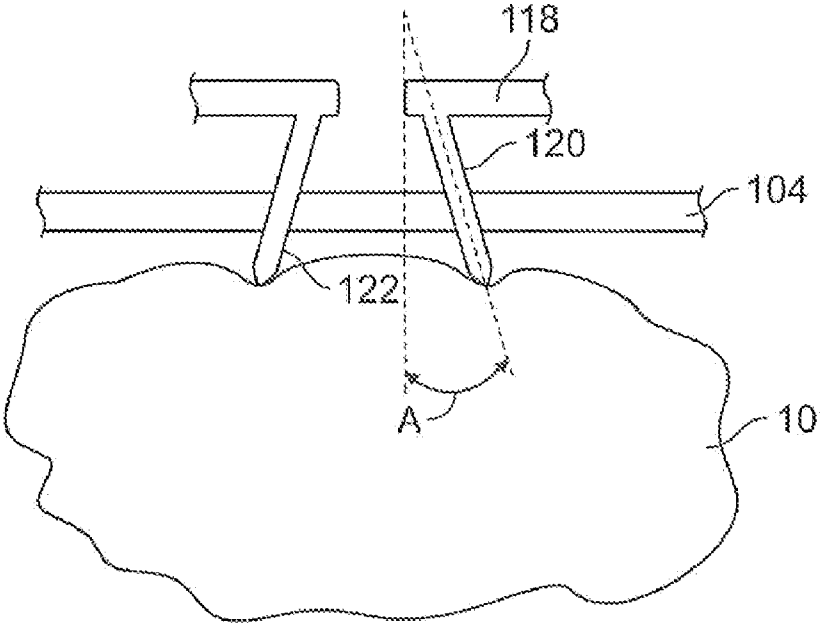

FIG. 5C

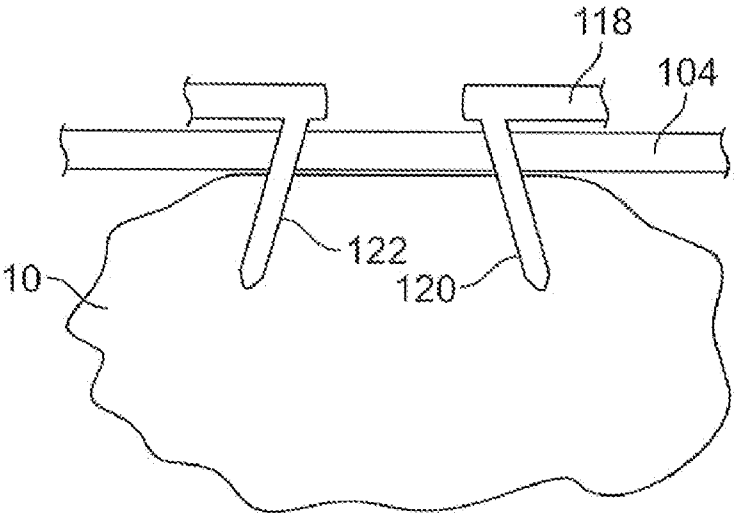

FIG. 5D

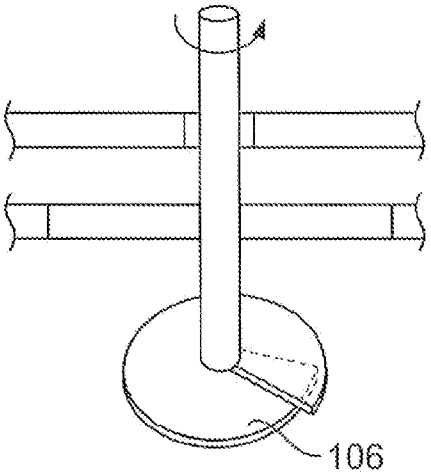

FIG. 6A

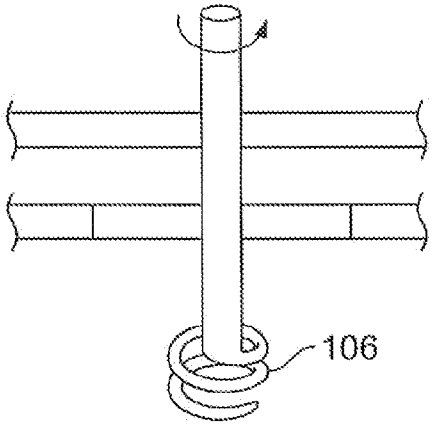

FIG. 6B

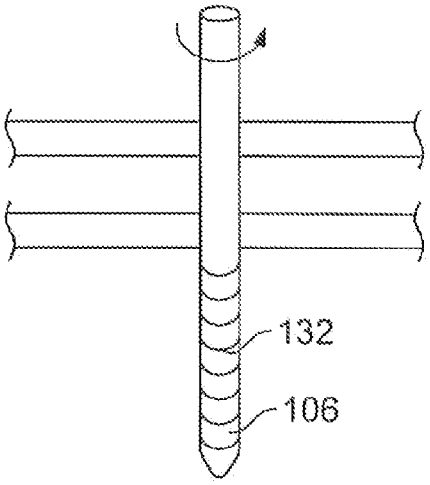

FIG. 6C

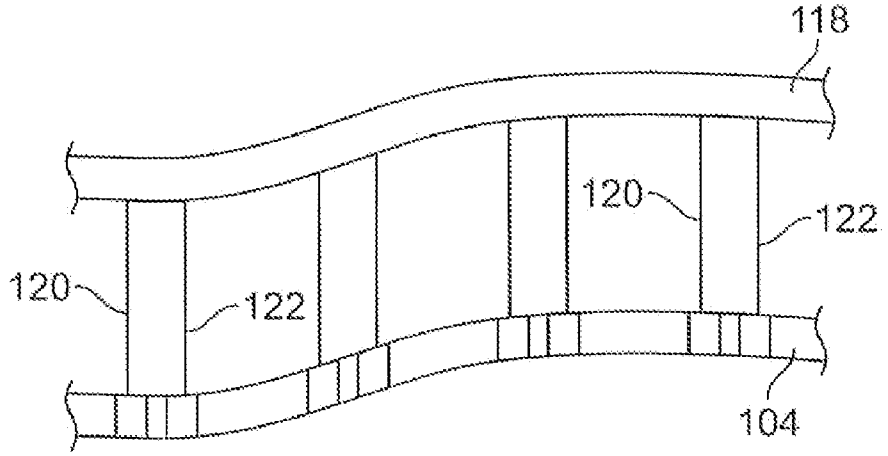

FIG. 7A

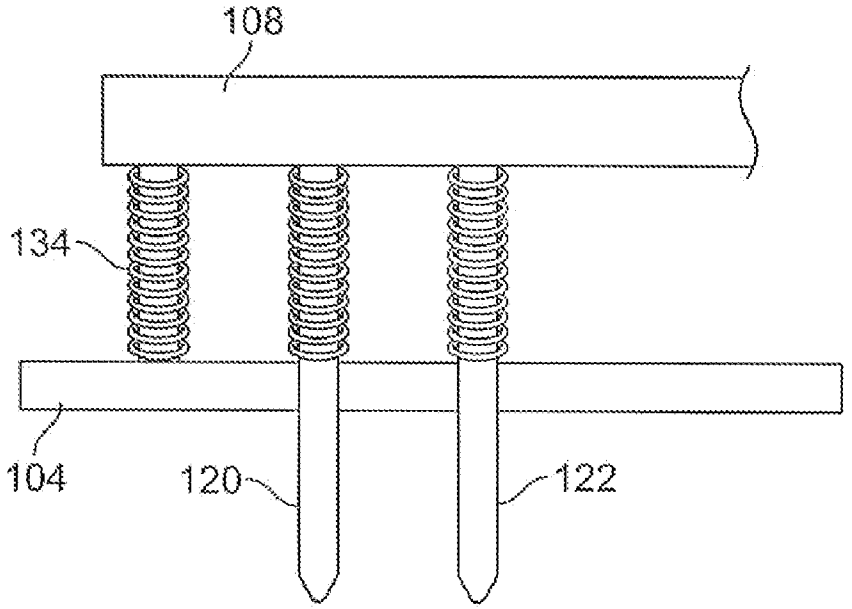

FIG. 7B

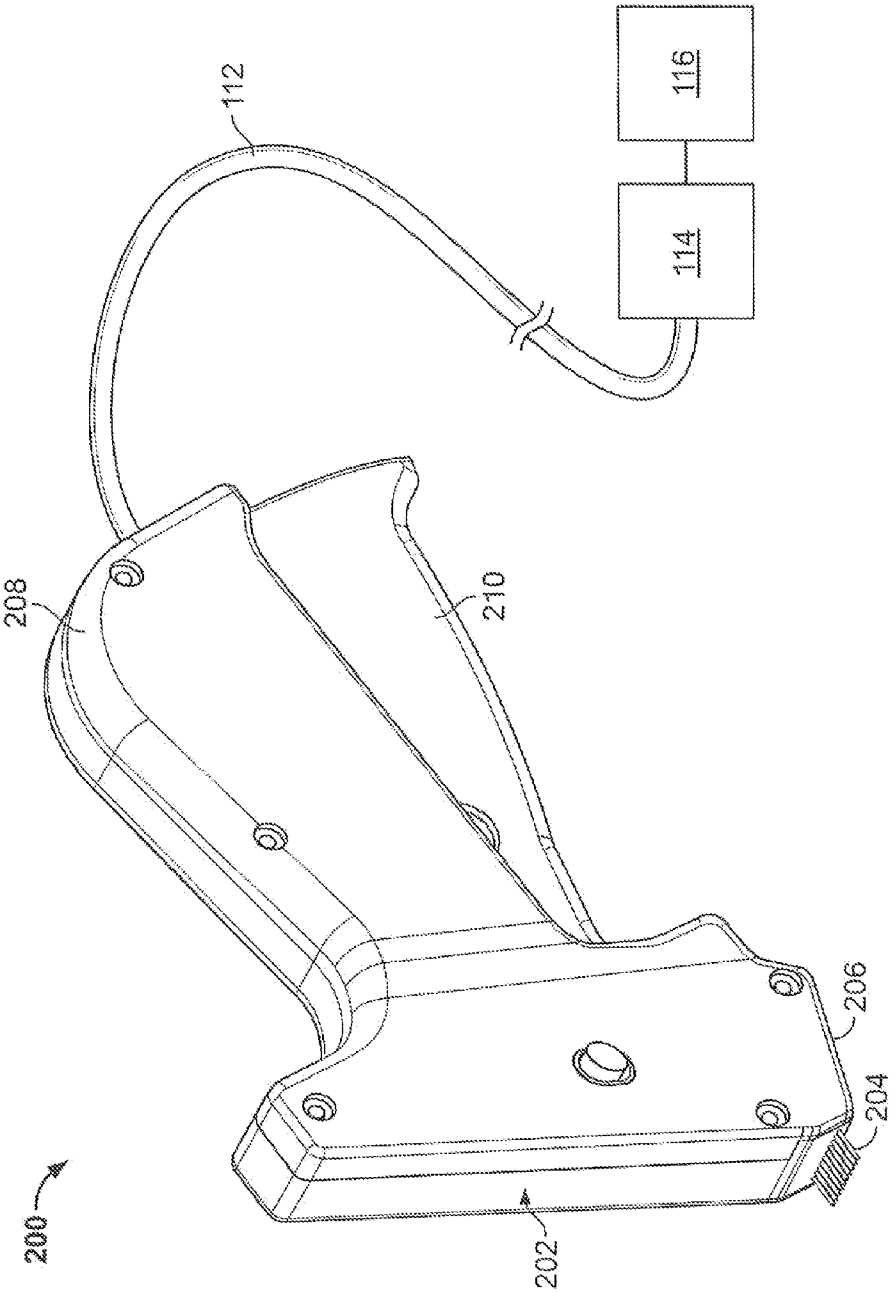

FIG. 8A

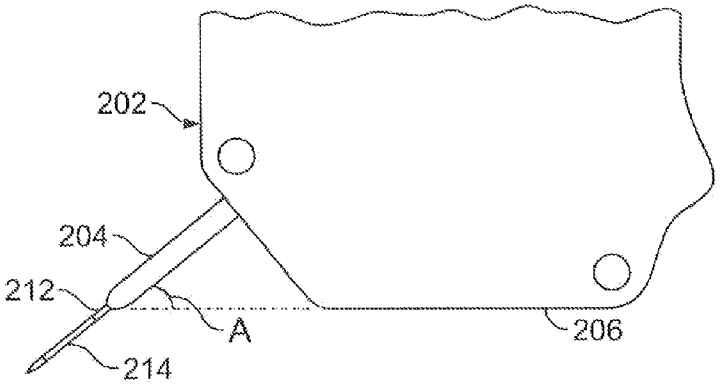

FIG. 8B

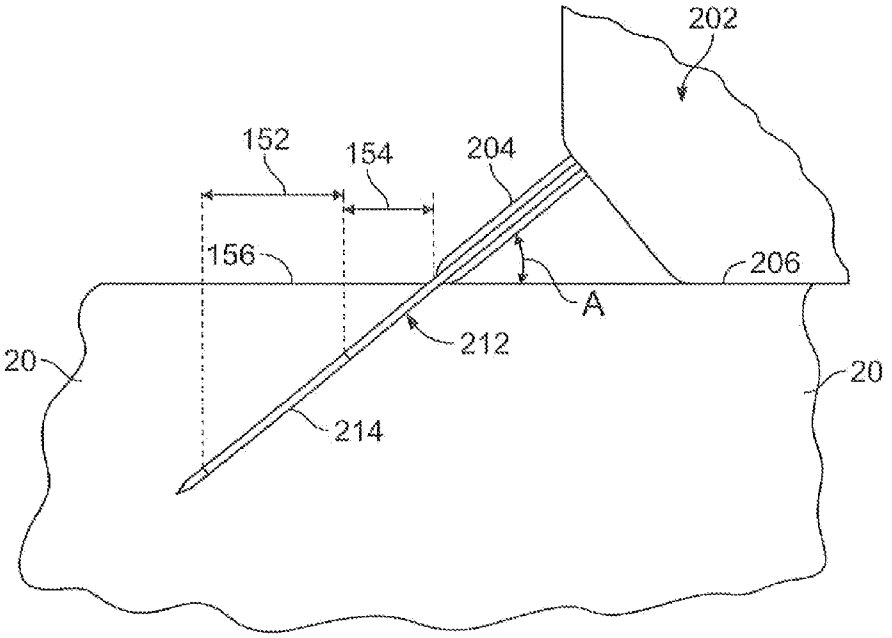

FIG. 8C

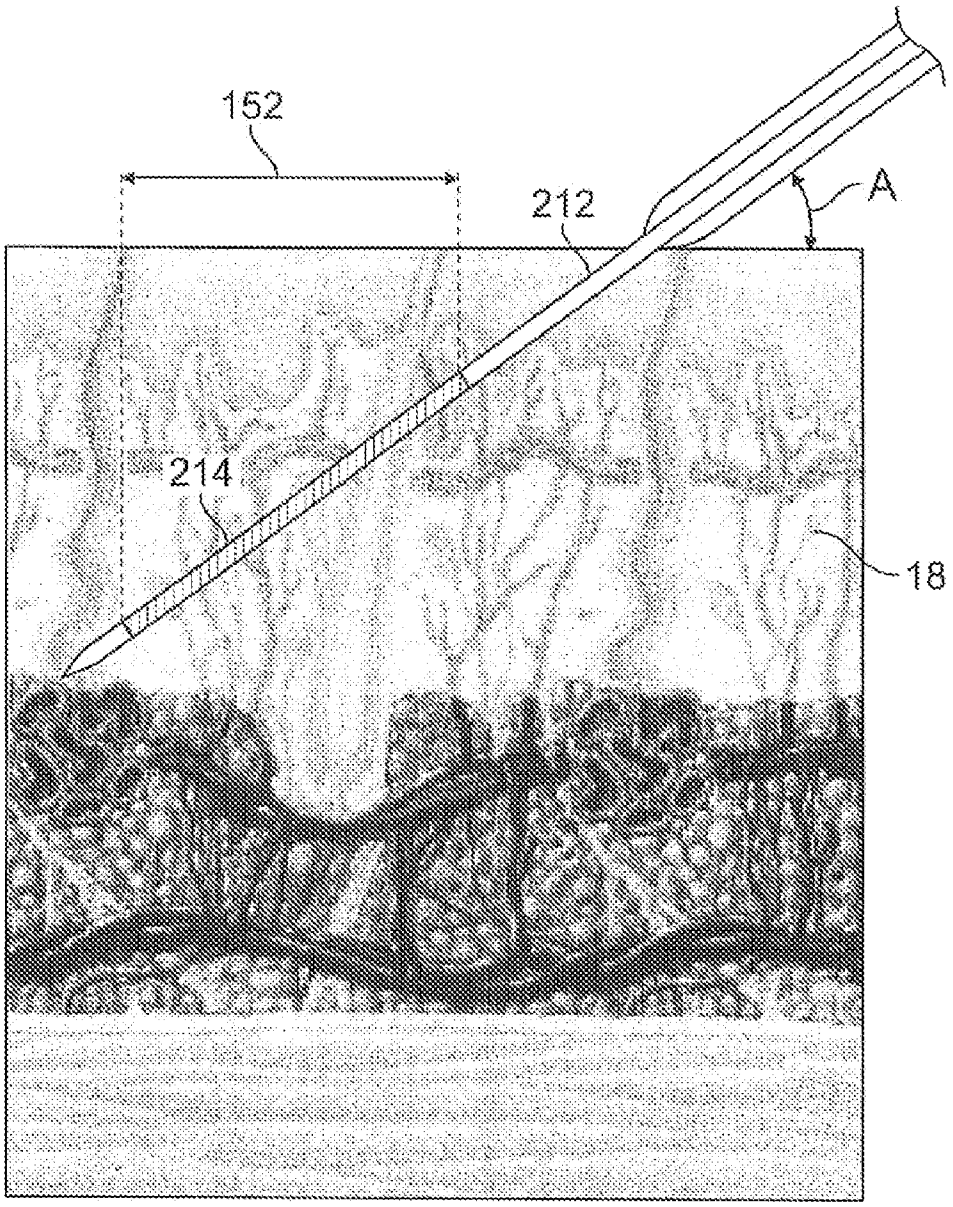

FIG. 8D

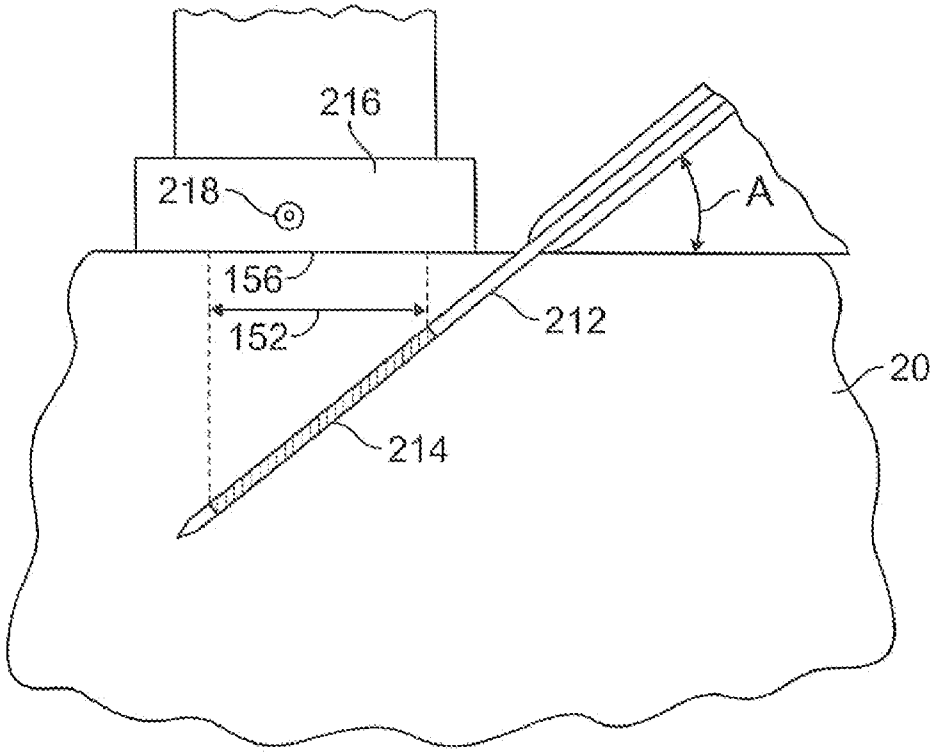

FIG. 8E

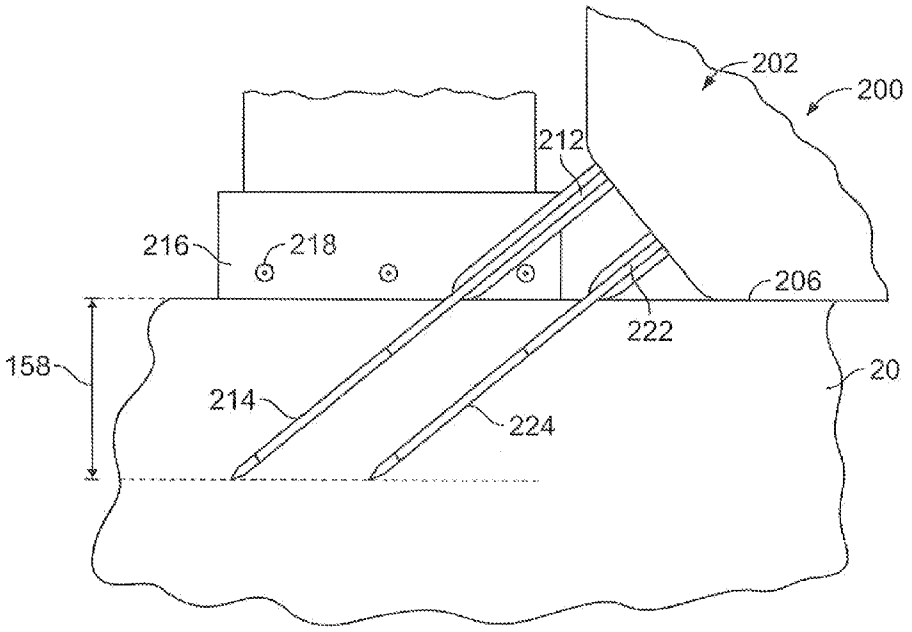
202
200
212
216
218
206
222
158
20
214
224

FIG. 8F

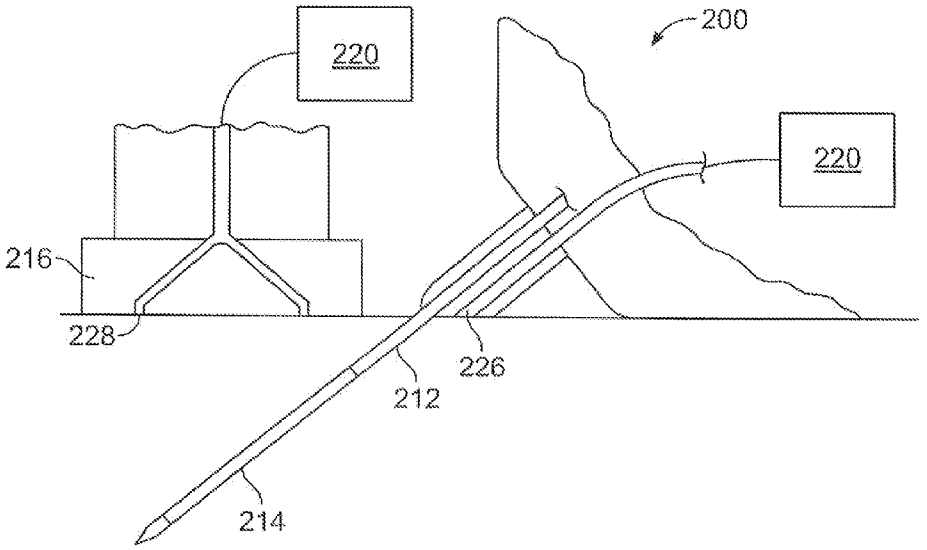
200
220
220
216
228
226
212
214

FIG. 8G

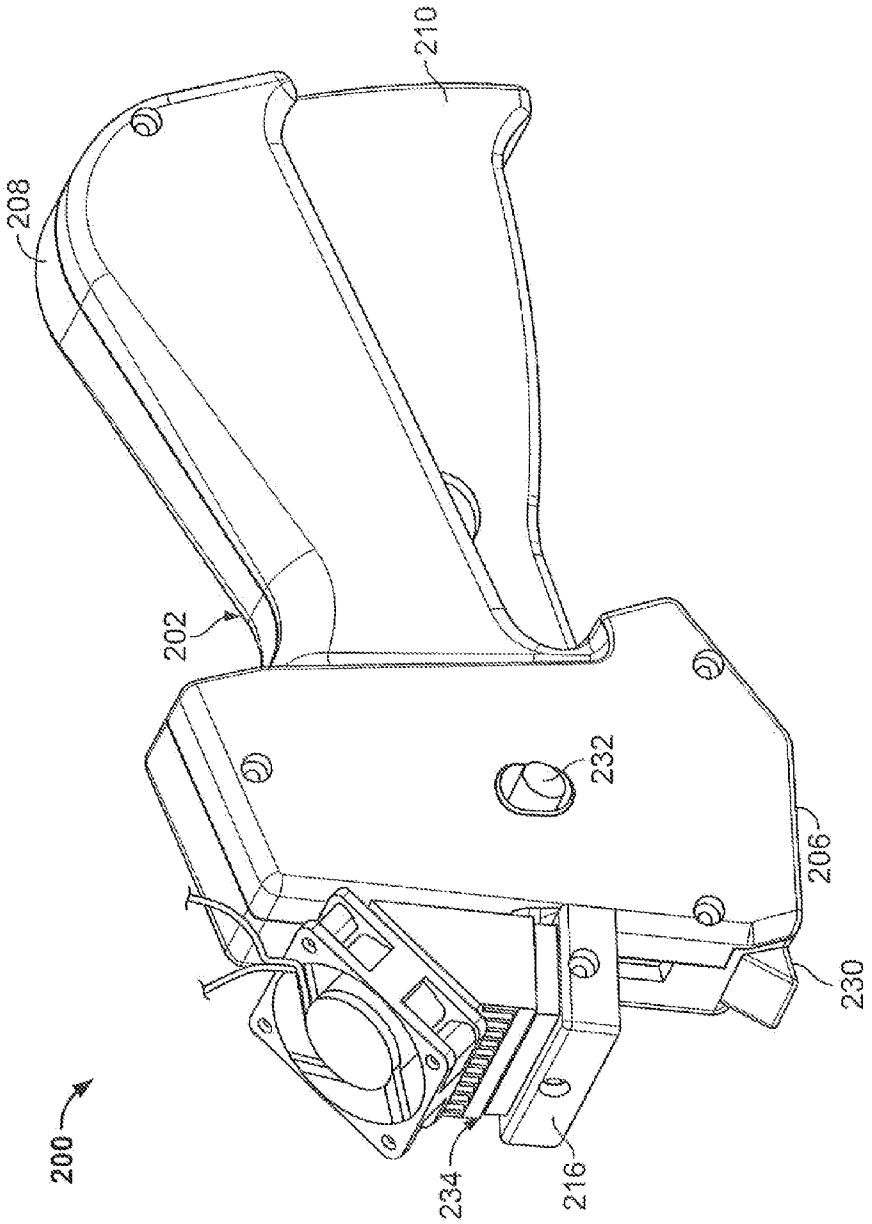

FIG. 9A

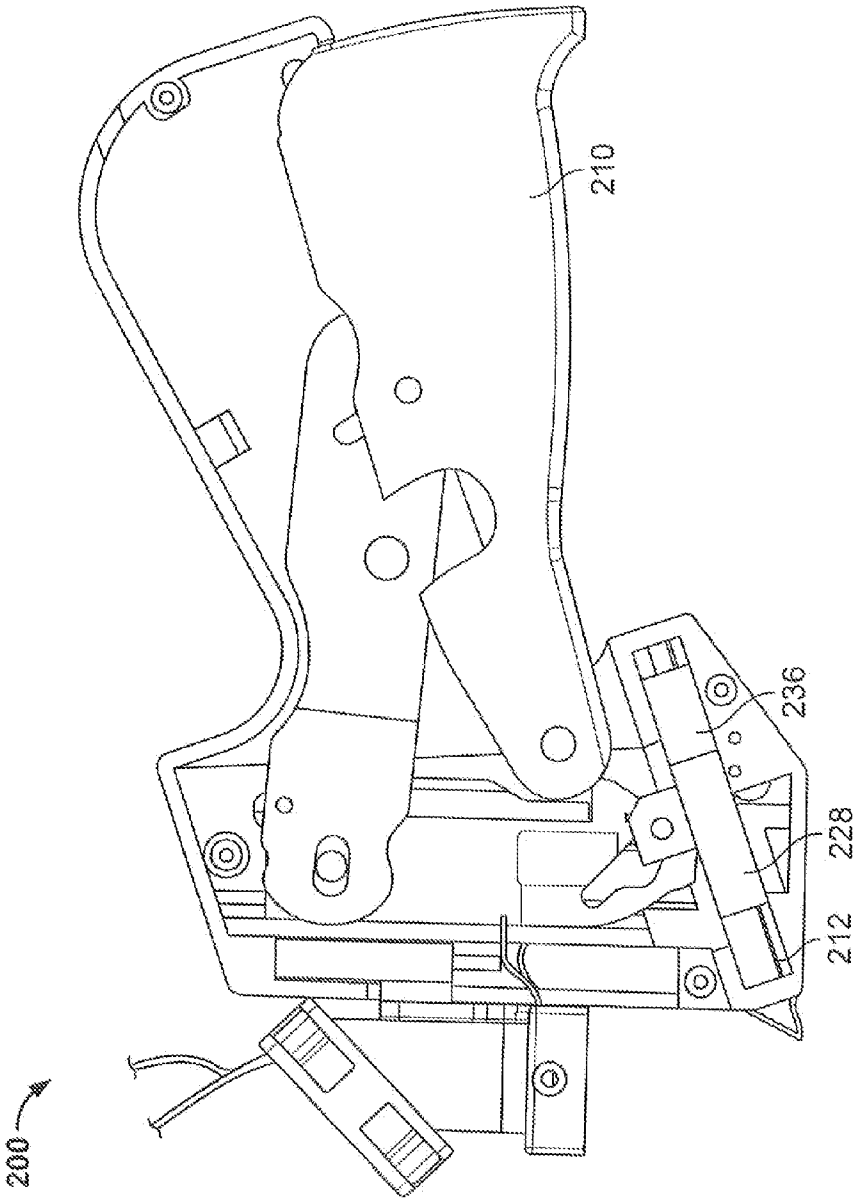

FIG. 9B

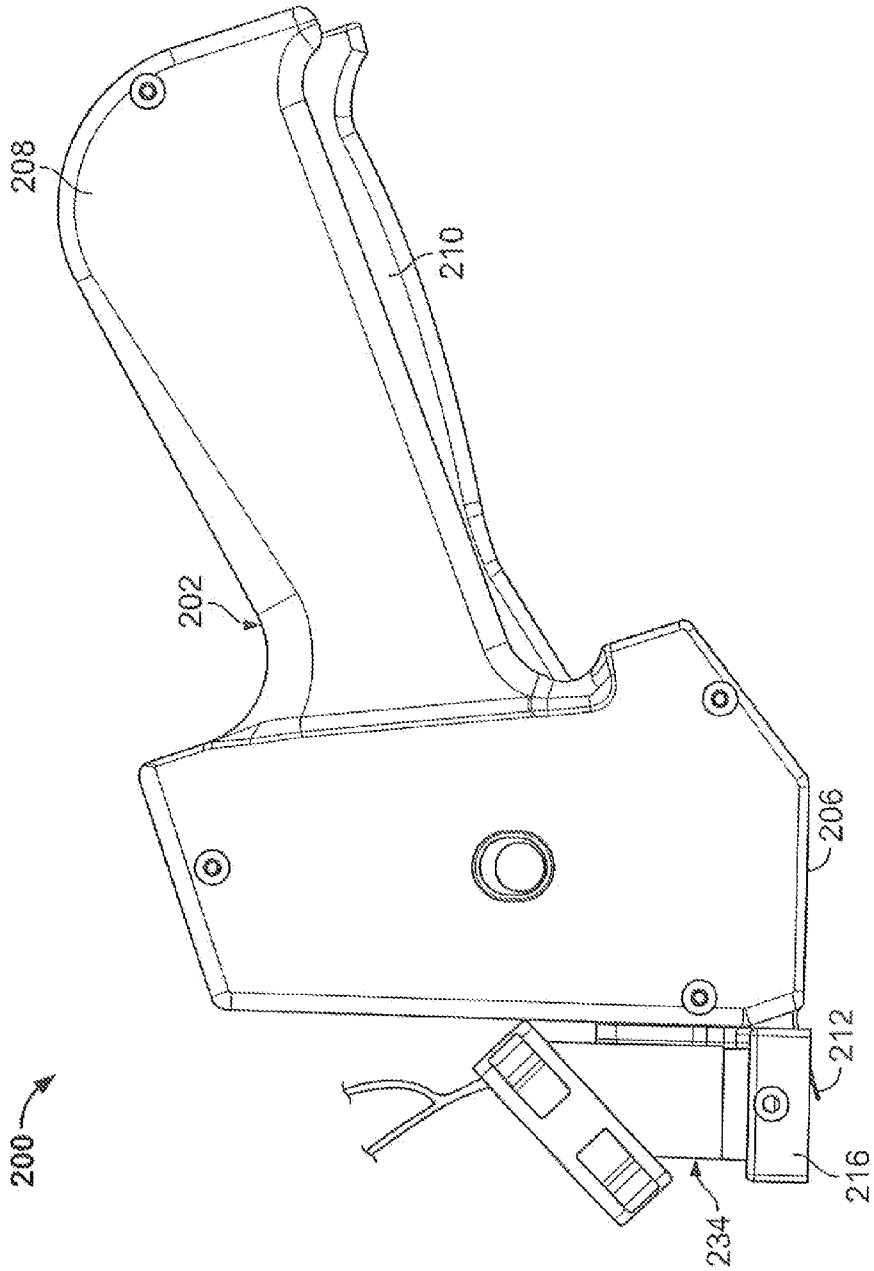

FIG. 9C

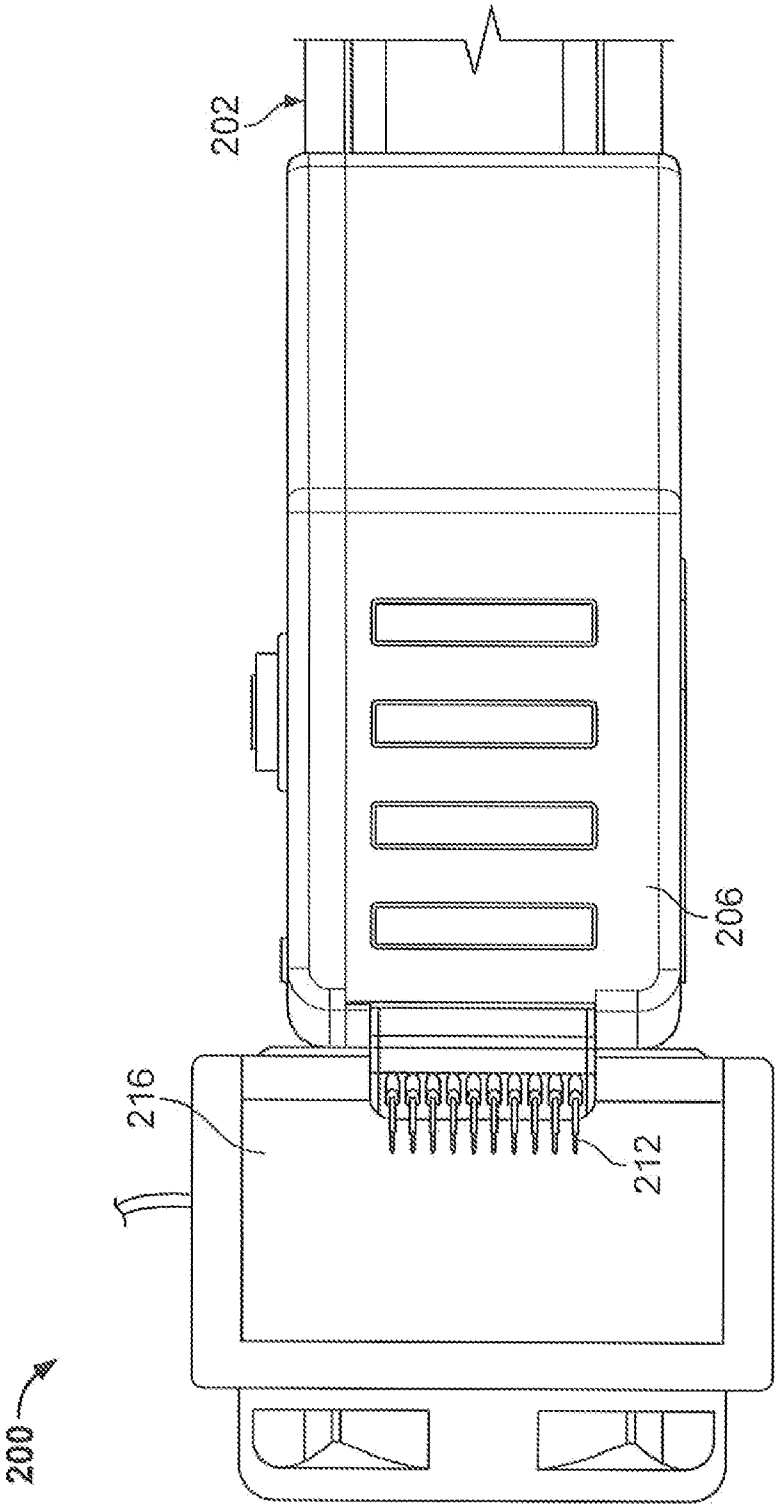

FIG. 9D

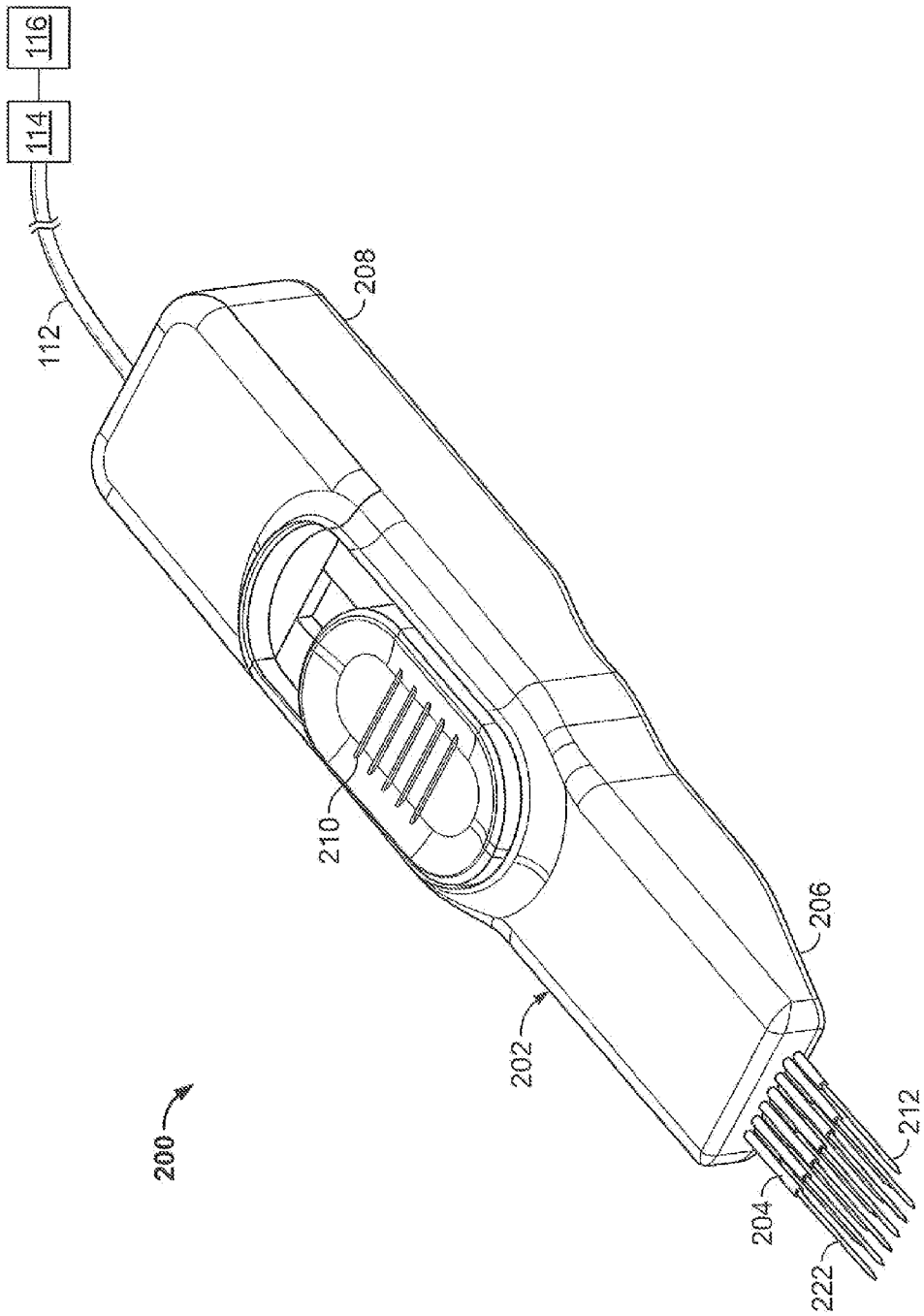

FIG. 10A

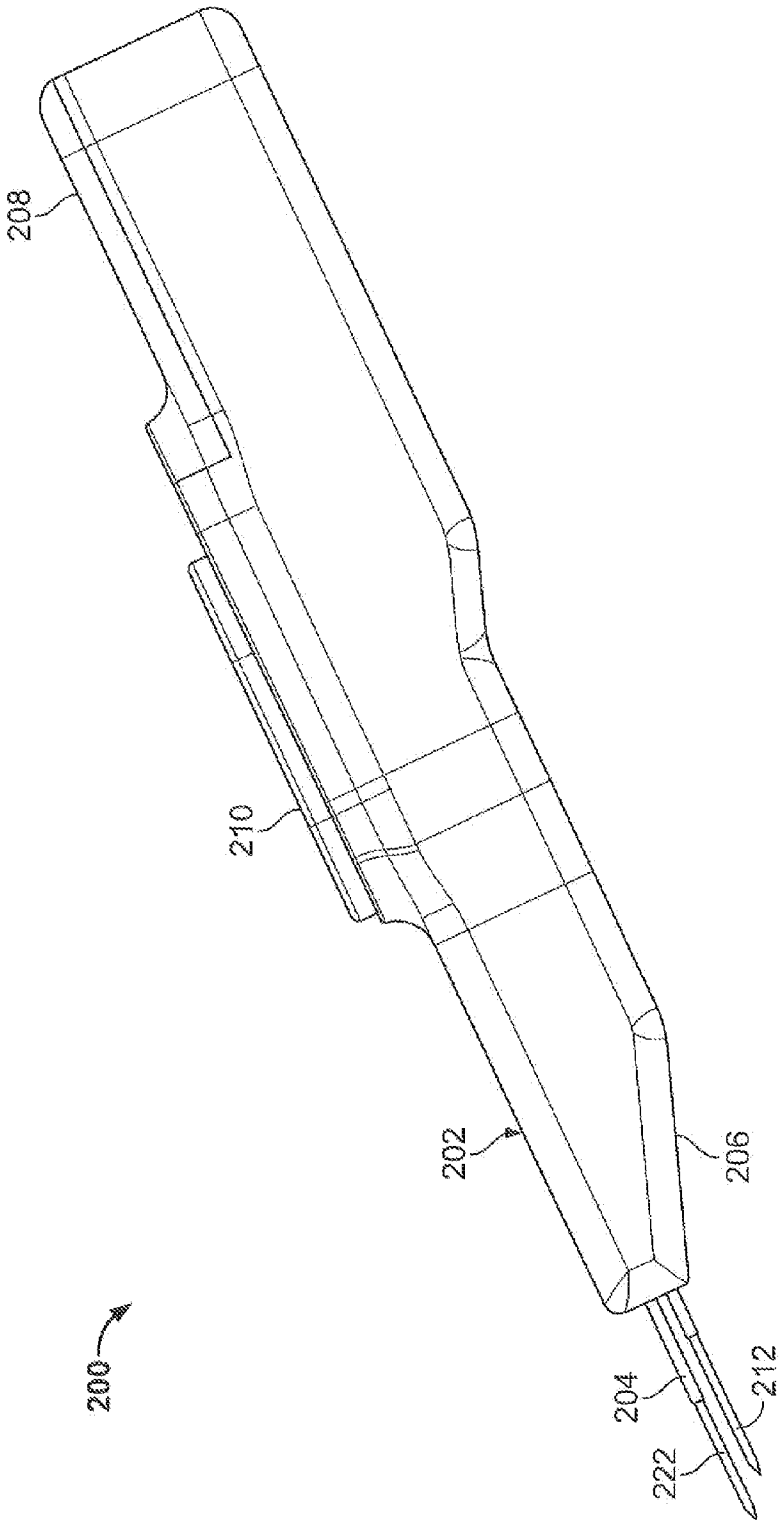

FIG. 10B

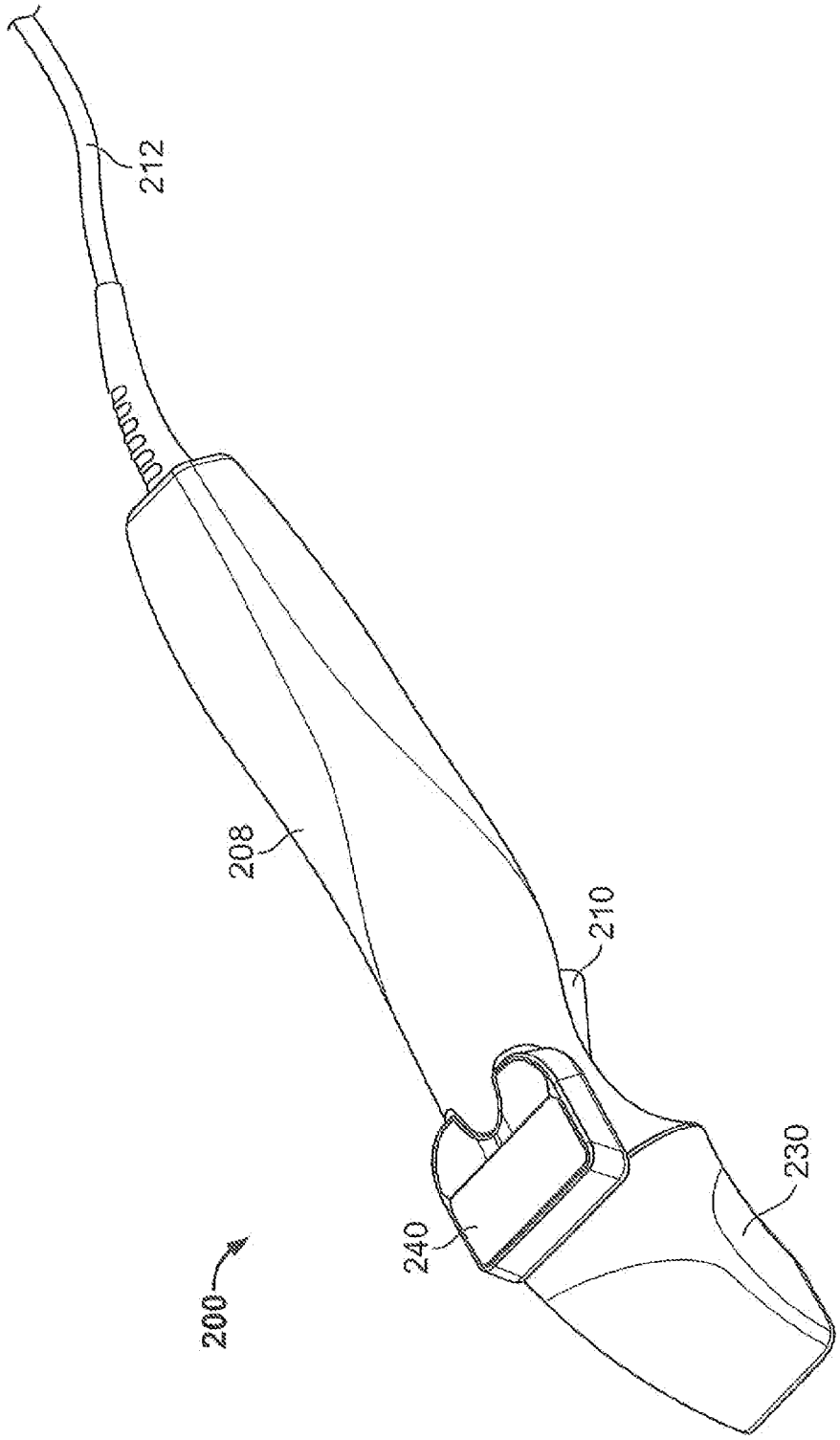

FIG. 11

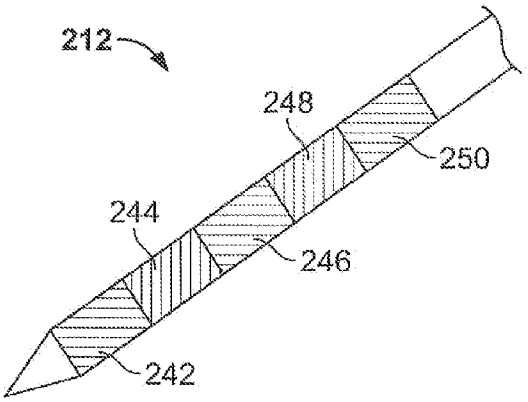

FIG. 12A

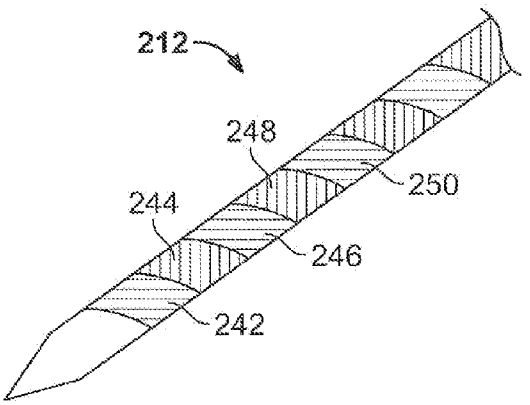

FIG. 12B

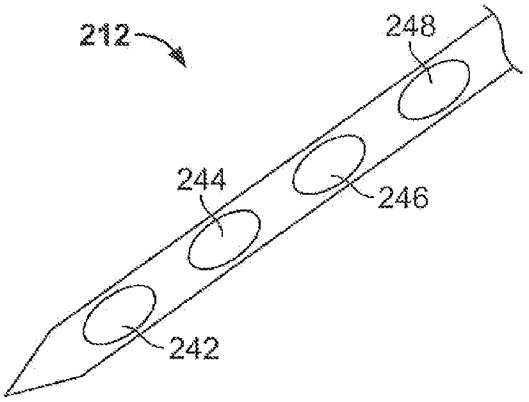

FIG. 12C

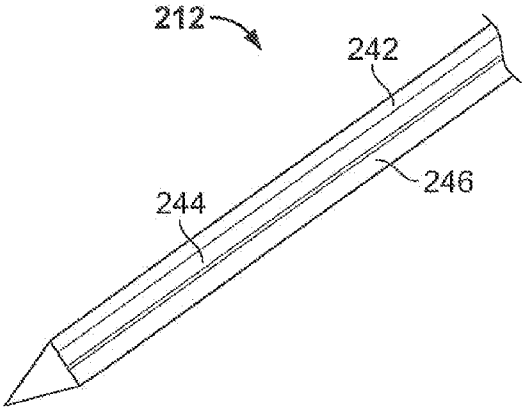

FIG. 12D

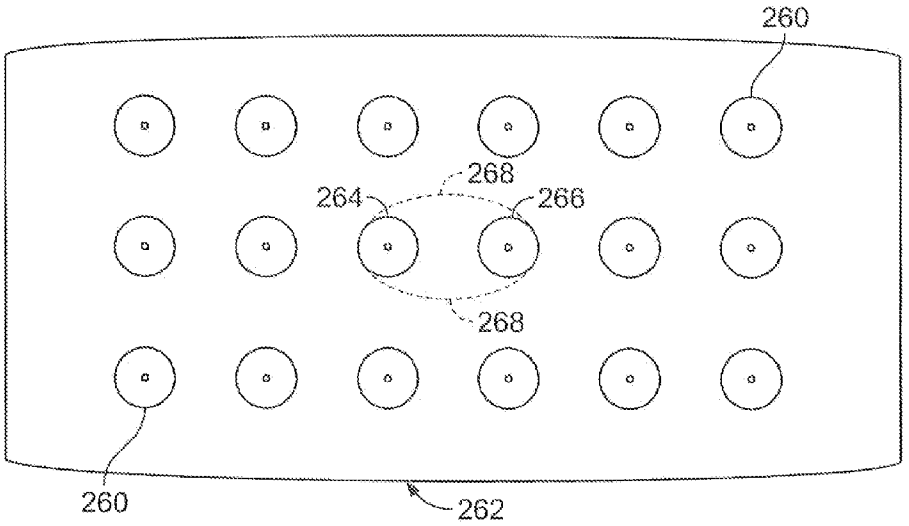

FIG. 13A

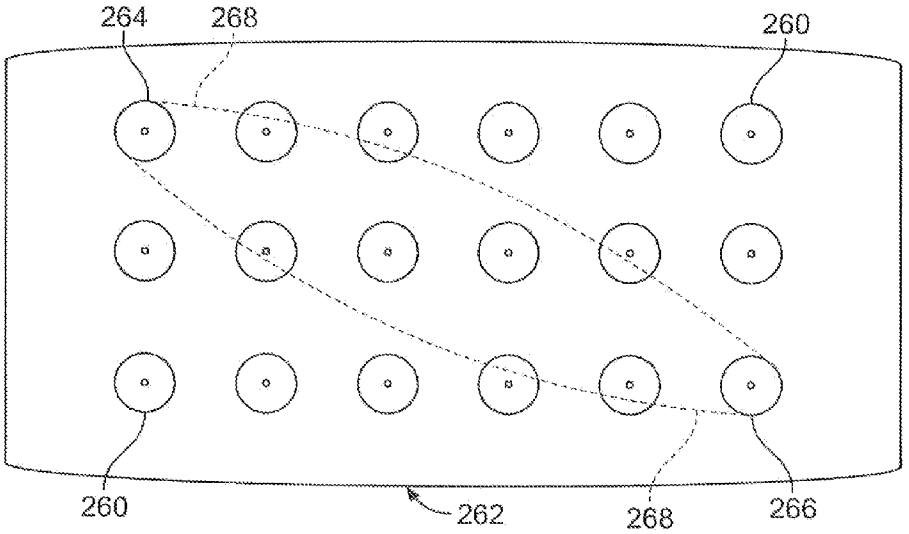

FIG. 13B

METHODS AND DEVICES FOR TREATING TISSUE

BACKGROUND OF THE INVENTION

[0001] The systems and method discussed herein treat tissue in the human body. In a particular variation, systems and methods described below treat cosmetic conditions affecting the skin of various body parts, including face, neck, and other areas traditionally prone to wrinkling, lines, sagging and other distortions of the skin.

[0002] Exposure of the skin to environmental forces can, over time, cause the skin to sag, wrinkle, form lines, or develop other undesirable distortions. Even normal contraction of facial and neck muscles, e.g. by frowning or squinting, can also over time form furrows or bands in the face and neck region. These and other effects of the normal aging process can present an aesthetically unpleasing cosmetic appearance.

[0003] Accordingly, there is well known demand for cosmetic procedures to reduce the visible effects of such skin distortions. There remains a large demand for "tightening" skin to remove sags and wrinkles especially in the regions of the face and neck.

[0004] One method surgically resurfaces facial skin by ablating the outer layer of the skin (from 200 μm to 600 μm), using laser or chemicals. In time, a new skin surface develops. The laser and chemicals used to resurface the skin also irritate or heat the collagen tissue present in the dermis. When irritated or heated in prescribed ways, the collagen tissue partially dissociates and, in doing so, shrinks. The shrinkage of collagen also leads to a desirable "tightened" look. Still, laser or chemical resurfacing leads to prolonged redness of the skin, infection risk, increased or decreased pigmentation, and scarring.

[0005] Lax et al. U.S. Pat. No. 5,458,596 describes the use of radio frequency energy to shrink collagen tissue. This cosmetically beneficial effect can be achieved in facial and neck areas of the body in a minimally intrusive manner, without requiring the surgical removal of the outer layers of skin and the attendant problems just listed.

[0006] Utely et al. U.S. Pat. No. 6,277,116 also teaches a system for shrinking collagen for cosmetically beneficial purposes by using an electrode array configuration.

[0007] However, areas of improvement remain with the previously known systems. In one example, fabrication of an electrode array may cause undesired cross-current paths forming between adjacent electrodes resulting in an increase in the amount of energy applied to tissue.

[0008] In another example, when applying the array to tissue, the medical practitioner experiences a "bed-of-nails". In other words, the number of electrodes and their configuration in the array effectively increases the total surface area of the electrode array. The increase in effective surface area then requires the medical practitioner to apply a greater force to the electrode array in order to penetrate tissue. Such a drawback may create collateral damage as one or more electrode may be placed too far within the skin. Additionally, the patient may experience the excessive force as the medical practitioner increases the applied force to insert the array within tissue.

[0009] Thermage, Inc. of Hayward Calif. also holds patents and sells devices for systems for capacitive coupling of electrodes to deliver a controlled amount of radiofrequency energy. This controlled delivery of RF energy creates an electric field that generates "resistive heating" in the skin to produce cosmetic effects while cooling the epidermis to prevent external burning of the epidermis.

[0010] In such systems that treat in a non-invasive manner, generation of energy to produce a result at the dermis results in unwanted energy passing to the epidermis. Accordingly, excessive energy production creates the risk of unwanted collateral damage to the skin.

[0011] In view of the above, there remains a need for an improved energy delivery system. Such systems may be applied to create improved electrode array delivery system for cosmetic treatment of tissue. In particular, such an electrode array may provide deep uniform heating by applying energy to tissue below the epidermis to causes deep structures in the skin to immediately tighten. Over time, new and remodeled collagen may further produce a tightening of the skin, resulting in a desirable visual appearance at the skin's surface.

SUMMARY OF THE INVENTION

[0012] The invention provides improved systems and methods of systems and methods of achieving the cosmetically beneficial effects of using energy to shrink collagen tissue in the dermis in an effective manner that prevents the energy from affecting the outer layer of skin.

[0013] One aspect of the invention provides systems and methods for applying electromagnetic energy to skin. The systems and methods include a carrier and an array of electrodes on the carrier, which are connectable to a source of electromagnetic energy to apply the electromagnetic energy. The devices and methods described herein can also be used to treat tissue masses such as tumors, varicose veins, or other tissue adjacent to the surface of tissue.

[0014] The devices and methods described herein may provide electrode arrays that penetrate tissue at an oblique angle or at a normal angle as discussed below. In addition, in those variations where the electrode array enters at an oblique angle, the device may include a cooling surface that directly cools the surface area of tissue adjacent to the treated region of tissue. The cooling methods and apparatus described herein may be implemented regardless of whether the electrodes penetrate at an oblique angle or not.

[0015] According to this aspect of the invention, a faceplate on the carrier or treatment unit covers the array of electrodes. Faceplate can be a non-conducting material and may or may not conform to the outer surface of tissue.

[0016] An interior chamber is formed behind the faceplate and contains an electrode plate. The electrode plate can move within the chamber to allow movement of the electrodes through openings in the faceplate. It is noted however, that variations of the invention may or may not have a faceplate and/or an electrode plate.

[0017] Methods described herein include methods for applying energy to tissue located beneath a surface layer of the tissue by providing an energy transfer unit having a faceplate with a plurality of openings and a plurality of electrodes moveable through the faceplate. In operation a medical practitioner can place the faceplate in contact with the surface layer of tissue then draw and maintain the surface layer of tissue against the openings in the faceplate. Subsequently, or simultaneously to this act, the medical practitioner can advance the electrodes through the surface tissue and

into the tissue and apply energy with a portion of the electrode beneath the skin to create a thermal injury to tissue beneath the skin.

[0018] The number of openings may match the number of electrodes. Alternatively, there may be additional openings in the treatment unit to maintain a vacuum with the tissue and/or allow movement of the electrodes within the chamber.

[0019] Variations of the invention include movement of the electrodes by use of a spring. The spring provides a spring force to move the electrodes at a velocity that allows for easier insertion of the electrode array into tissue.

[0020] Alternatively, or in combination, the electrodes may be coupled to an additional source of energy that imparts vibration in the electrodes (e.g., an ultrasound energy generator). The same energy source may be used to generate the thermal effect in the dermis.

[0021] The methods and devices described herein may also use features to facilitate entry of the electrodes into tissue. For example, the surface tissue may be placed in traction prior to advancing electrodes through the surface tissue. The electrodes can comprise a curved shape. Where advancing the curved electrodes through tissue comprises rotating the electrodes into tissue.

[0022] The power supply for use with the systems and methods described herein may comprise a plurality of electrode pairs, each electrode pair comprising a mono-polar or bi-polar configuration. Each electrode pair of the system may be coupled to an independent channel of a power supply or independent power supplies. Such configurations permit improved controlled delivery of energy to the treatment site.

[0023] Another variation that controls delivery of energy may include spacing where each electrode pair at a sufficient distance from an adjacent electrode pair to minimize formation of a cross-current path between adjacent electrode pairs. Moreover, the independent power supply can be configured to energize adjacent electrode pairs at different times.

[0024] Devices according to the principles of the present invention include an electrode array for treating a dermis layer of tissue, the array comprising a faceplate comprising a plurality of openings, a plurality of electrode pairs each pair comprising an active and a return electrode, where the electrode pairs extend through openings in the faceplate, at least one electrode plate carrying the plurality of electrode pairs, where the electrode plate and face plate are moveable relative to each other to allow for axial movement of the electrode pairs through the openings.

[0025] It is expressly intended that, wherever possible, the invention includes combinations of aspects of the various embodiments described herein or even combinations of the embodiments themselves.

BRIEF DESCRIPTION OF THE DRAWINGS

[0026] FIG. **1** shows a representative sectional view of skin and underlying subcutaneous tissue;

[0027] FIG. **2**A shows a sample variation of a system according to the principles of the invention;

[0028] FIG. **2**B illustrates a partial cross-sectional view of an exemplary treatment unit where the electrode array is retained proximal to a faceplate of the device;

[0029] FIGS. **2**C-**2**D respectively illustrates a partial cross sectional view of an exemplary treatment unit after tissue is drawn against the unit and the unit after the electrodes deploy into tissue;

[0030] FIG. **2**E illustrates a variation of a sensor disposed on an electrode;

[0031] FIG. **2**F shows an example of spacing of electrode pairs in the electrode array to minimize current flow between adjacent electrode pairs;

[0032] FIGS. **3**A to **3**B show variations of introducer members that assist in placing electrodes within tissue;

[0033] FIGS. **4**A to **4**C show variations of curved electrodes that pivot or rotate into tissue;

[0034] FIGS. **5**A to **5**D show variations of electrodes placed at oblique angles;

[0035] FIGS. **6**A to **6**C show additional variations of electrode configurations;

[0036] FIGS. **7**A to **7**B show additional modes of contouring the treatment unit to varying skin geometries; and

[0037] FIG. **8**A shows an additional variation of a device having an array of electrodes adjacent to a tissue engaging surface;

[0038] FIG. **8**B shows a magnified view of the electrodes and tissue engaging surface of the device of FIG. **8**A;

[0039] FIGS. **8**C to **8**D show an example of an electrode entering tissue at an oblique angle adjacent to a tissue engaging surface;

[0040] FIG. **8**E to **8**F show cooling surfaces adjacent to the electrodes;

[0041] FIG. **8**G shows a variation of a device having a marking assembly;

[0042] FIGS. **9**A to **9**D show another variation of an electrode device with a cooling system that can be placed adjacent to the electrodes;

[0043] FIGS. **10**A to **10**B show an additional variation of an electrode device;

[0044] FIG. **11** shows a variation of an electrode device having a user interface on a body portion;

[0045] FIGS. **12**A-**12**D illustrate variations of electrodes having varying resistance or impedance along the length of the electrode; and

[0046] FIGS. **13**A to **13**B show an example of an array of electrodes where any number of pairs of electrodes can be triggered to apply therapeutic energy to tissue.

DESCRIPTION OF THE PREFERRED EMBODIMENT

[0047] The systems and method discussed herein treat tissue in the human body. In one variation, the systems and methods treat cosmetic conditions affecting the skin of various body parts, including face, neck, and other areas traditionally prone to wrinkling, lines, sagging and other distortions of the skin. The methods and systems described herein may also have application in other surgical fields apart from cosmetic applications.

[0048] As FIG. **1** shows, the skin **10** covers subcutaneous tissue **12** and muscle tissue **14** of within the body. In the face and neck areas, the skin **10** measures about 2 mm in cross section.

[0049] The skin **10** includes an external, non-vascular covering called the epidermis **16**. In the face and neck regions, the epidermis measures about 100 μm in cross section. The skin **10** also includes a dermis **18** layer that

contains a layer of vascular tissue. In the fade and neck regions, the dermis **18** measures about 1900 μm in cross section.

[0050] The dermis **18** includes a papillary (upper) layer and a reticular (lower) layer. Most of the dermis **18** comprises collagen fibers. However, the dermis also includes various hair bulbs, sweat ducts, and other glands. The subcutaneous tissue **12** region below the dermis **18** contains fat deposits as well as vessels and other tissue.

[0051] In most cases, when applying cosmetic treatment to the skin, it is desirable to deliver energy the dermis layer rather than the epidermis, the subcutaneous tissue region **12** or the muscle **14** tissue. In fact, delivery of energy to the subcutaneous tissue region **12** or muscle **14** may produce pockets or other voids leading to further visible imperfections in the skin of a patient.

[0052] The application of heat to the fibrous collagen structure in the dermis **18** causes the collagen to dissociate and contract along its length. It is believed that such disassociation and contraction occur when the collagen is heated to about 65 degree. C. The contraction of collagen tissue causes the dermis **18** to reduce in size, which has an observable tightening effect. As the collagen contacts, wrinkles, lines, and other distortions become less visible. As a result, the outward cosmetic appearance of the skin **10** improves. Furthermore, the eventual wound healing response may further cause additional collagen production. This latter effect may further serve to tighten the skin **10**.

[0053] FIG. **2**A illustrates a variation of a treatment system according the principles described herein. The treatment system **100** generally includes a treatment unit **102** having a hand-piece **110** (or other member/feature that allows for manipulation of the system to treat tissue **10**). The treatment unit **102** shown includes a faceplate **104** having a plurality of electrodes **106** (generally formed in an array) that extend from openings **108** in the faceplate **104**. The devices may comprise electrode arrays of only a single electrode pair up to considerably larger arrays. Currently, the size of the array is determined by the target region that is intended for treatment. For example, a treatment unit **102** designed for relatively small treatment areas may only have a single pair of electrodes. On the other hand, a treatment unit **102** designed for use on the cheek or neck may have up to 10 electrode pairs. However, estimates on the size of the electrode array are for illustrative purposes only. In addition, the electrodes on any given array may be the same shape and profile. Alternatively, a single array may have electrodes of varying shapes, profiles, and/or sizes depending upon the intended application.

[0054] The electrodes **106** can be fabricated from any number of materials, e.g., from stainless steel, platinum, and other noble metals, or combinations thereof. Additionally, the electrode may be placed on a non-conductive member (such as a polymeric member). In any case, the electrode **106** may be fastened to the electrode plate by various means, e.g., by adhesives, by painting, or by other coating or deposition techniques.

[0055] Additionally, the treatment unit **102** may or may not include an actuator **128** for driving the electrode array **126** from the faceplate **104**. Alternative variations of the system **100** include actuators driven by the control system **114**.

[0056] The number of electrodes **106** in the array may vary as needed for the particular application. Furthermore, the array defined by the electrodes **106** may have any number of shapes or profiles depending on the particular application. As described in additional detail herein, in those variations of the system **100** intended for skin resurfacing, the length of the electrodes **106** is generally selected so that the energy delivery occurs in the dermis layer of the skin **10** while the spacing of electrodes **106** may be selected to minimize flow of current between adjacent pairs of electrodes.

[0057] When treating the skin, it is believed that the dermis should be heated to a predetermined temperature condition, at or about 65 degree C., without increasing the temperature of the epidermis beyond 47 degree C. Since the active area of the electrode designed to remain beneath the epidermis, the present system applies energy to the dermis in a targeted, selective fashion, to dissociate and contract collagen tissue. By attempting to limit energy delivery to the dermis, the configuration of the present system also minimizes damage to the epidermis.

[0058] The system **10** also includes an energy supply unit **114** coupled to the treatment unit **102** via a cable **112** or other means. The energy supply unit **114** may contain the software and hardware required to control energy delivery. Alternatively, the CPU, software and other hardware control systems may reside in the hand piece **110** and/or cable **112**. It is also noted that the cable **112** may be permanently affixed to the supply unit **114** and/or the treatment unit **102**. The energy supply unit may be a RF energy unit. Additional variations of energy supply units may include power supplies to provide thermal energy, ultrasound energy, laser energy, and infrared energy.

[0059] The energy supply unit **114** may also include an input/output (I/O) device that allows the physician to input control and processing variables, to enable the controller **114** to generate appropriate command signals. The I/O device can also receive real time processing feedback information from one or more sensors **98** associated with the device, for processing by the controller **114**, e.g., to govern the application of energy and the delivery of processing fluid. The I/O device may also include a display **54**, to graphically present processing information to the physician for viewing or analysis.

[0060] In some variations, the system **100** may also include an auxiliary unit **116** (where the auxiliary unit may be a vacuum source, fluid source, ultrasound generator, medication source, etc.) Although the auxiliary unit is shown to be connected to the energy supply, variations of the system **100** may include one or more auxiliary units **116** where each unit may be coupled to the power supply **114** and/or the treatment unit **102**.

[0061] FIG. **2**B illustrates a cross sectional view of a variation of a treatment unit **102** according to the systems described herein. As shown, the treatment unit **102** includes the hand piece body **110** that houses the electrode array **126** on an electrode plate **118**. Naturally, the hand piece **110** or treatment unit **102** may have any shape that accommodates ease of use.

[0062] FIG. **2**B also shows the electrode array **126** being withdrawn behind the faceplate **104**. In the illustrated variation, the treatment unit **102** includes a spring release lever or trigger **124**. As described below, the spring release trigger **124** can be used to actuate a spring **130** (a coiled spring or other similar structure) to drive the electrode array **126** through openings **108** in the faceplate **104**. Driving the

electrode array **126** with the spring-force increases the force of the electrodes as they approach tissue and facilitates improved penetration of the tissue by the electrodes. Although the inventive system may not include such a spring force, the absence of such a feature may require the medical practitioner to apply excessive force to the entire treatment unit **102** when trying to insert the electrodes due to a "bed-of-nails" effect.

[0063] FIG. **2**C illustrates the treatment unit **102** as it is placed against tissue **10**. In this variation, a vacuum source (not shown) may be applied to the unit **102** to draw the tissue **10** against the faceplate **104**. Typically, the vacuum pulls the tissue in through the openings **108** on the faceplate **104**. Variations of the device include additional openings in the faceplate in addition to openings that allow passage of the electrodes. This latter configuration permits application of a vacuum as the electrodes penetrate the tissue.

[0064] By drawing tissue against the device or faceplate, the medical practitioner may better gauge the depth of the treatment. For example, given the relatively small sectional regions of the epidermis, dermis, and subcutaneous tissue, if a device is placed over an uneven contour of tissue, one electrode pair may be not be placed at the sufficient depth. Accordingly, application of energy in such a case may cause a burn on the epidermis. Therefore, drawing tissue to the faceplate of the device increases the likelihood of driving the electrodes to a uniform depth in the tissue.

[0065] Although not shown, the electrode plate **118** may contain apertures or other features to allow distal movement of the plate **118** and electrodes **106** during the application of a vacuum.

[0066] FIG. **2**D illustrates deployment of the electrode array **126** into the tissue **10**. Although not shown, in variations of the device suited for cosmetic applications, the length of the electrodes **106** will be chose to place the active region of the electrode (i.e., the region that conducts electricity) within the dermis. Again, the depth of the electrodes may vary depending upon the region of the body intended for treatment. In one variation, the electrodes **106** may be driven into the tissue as far as possible to ensure complete contact between the faceplate **104** and the surface of the skin. Subsequently, the electrode may be withdrawn a predetermined distance to place the active portion of the electrode in the proper location.

[0067] FIG. **2**E illustrates an example of an electrode **106** having a sensor **98**. The sensor may be any device that monitors temperature of the tissue, impedance, or other characteristic. Additionally, more than one sensor **98** may be used on a single electrode, on an electrode array, on the faceplate or any combination thereof.

[0068] In variations of the present system, the electrodes **106** can be configured to individually rotate, vibrate (e.g., via ultrasonic energy), or cycle in an axial direction, where such actions are intended to lower the overall insertion force required by the medical practitioner to place the electrodes within tissue.

[0069] The electrodes **106** are arranged in a pair configuration. In a bi-polar configuration one electrode **120** serves a first pole, while the second electrode **122** serves as the second pole (it is also common to refer to such electrodes as the active and return electrodes). The spacing of electrode pairs **106** is sufficient so that the pair of electrodes **120**, **122** is able to establish a treatment current path therebetween for the treatment of tissue. However, adjacent electrode pairs **106** will be spaced sufficiently to minimize the tendency of current flowing between the adjacent pairs. Typically, each electrode pair **106** is coupled to a separate power supply or to a single power supply having multiple channels for each electrode pair.

[0070] The benefit of such a configuration is that, when compared to conventional treatments, the amount of power required to induce heating in the target tissue is much reduced. For example, because the electrodes are spaced to provide heating across the electrode pairs at the target tissue, each channel of the system may provide 1 watt of energy to produce the desired temperature increase at the site. In contrast, if a treatment system delivered energy over the entire electrode array, a much greater amount of energy is required to generate the desired temperature over the larger surface area of tissue. Moreover, the energy demand is less because the treatment applies energy directly to the target tissue rather than though additional layers of tissue.

[0071] In one variation of the device, it is believed that a desirable spacing of the first and second electrode poles is between 1 and 3 mm, while a desirable spacing of electrode pairs is between 5 and 6 mm. In one example, the described configuration allowed for each independent channel to deliver no more than 1 watt to deliver acceptable tissue treatment results. Obviously, the power supply may be configured to deliver greater amounts of energy as needed depending on the application.

[0072] FIG. **2**F illustrates the electrode array **126** when deployed within tissue **10**. As noted above, variations of the device include electrode pairs **120**, **122** provided in a bi-polar configuration where each pair is coupled to a separate power supply or separate channel of a power supply. As shown, this configuration permits flow of current **132** between the two electrodes in the electrode pair rather than between adjacent pairs. Again, the invention is not limited to such a configuration and may be monopolar, and/or have electrode spacing that permits flow of current between several electrodes on the electrode array.

[0073] The ability to control each electrode pair on a separate channel from the power supply provides additional benefits based on the impedance or other characteristic of the tissue being treated. For example, each electrode pair may include a thermocouple to separately monitor each treatment site; the duration of the energy treatment may be controlled depending on the characteristics of the surrounding tissue; selective electrode pairs may be fired rather than all of the electrode pairs firing at once (e.g., by firing electrode pairs that are located on opposite ends of the electrode plate one can further minimize the chance that a significant amount of current flows between the separate electrode pairs.) Naturally, a number of additional configurations are also available depending on the application. Additional variations of the device may include electrode pairs that are coupled to a single channel of a power supply as well.

[0074] The present systems may deliver energy based upon sensing tissue temperature conditions as a form of active process feedback control. Alternatively, the systems may monitor changes in impedance of the tissue being treated and ultimately stop the treatment when a desired value is obtained. Yet another mode of energy delivery is to provide a total maximum energy over a duration of time.

[0075] As noted herein, temperature or other sensing may be measured beneath the epidermis in the dermis region.

Each probe or electrode may include a sensor or the sensor may be placed on a structure that penetrates the tissue but does not function as an energy delivery electrode. In yet another variation, the sensors may be a vertically stacked array of sensors to provide data along a depth or length of tissue.

[0076] FIG. **3**A illustrates an aspect for use with the variations of the devices described herein. In this example, the electrodes **120**, **122** include an introducer member **134** that places tissue **10** in a state of tension (also called "traction"). In this variation the introducer **134** is located about each opening **108** in the faceplate **104**. However, alternate variations of the device include introducer members placed directly on the electrode.

[0077] As shown, once the introducer member **134** engages tissue **10**, the tissue first elastically deforms as shown. Eventually, the tissue can no longer deflect and is placed in traction by the introducer members **134**. As a result, the electrodes **120**, **122** more readily penetrate the tissue.

[0078] FIG. **3**B illustrates another variation of the introducer member **134** that is tapered inwards toward the electrodes so that the opening at the distal end closely fits around the electrode.

[0079] In those variations of systems according to the present invention, if the electrodes engage the tissue without the introducer members, then the electrodes themselves may cause plastic deformation of the surface tissue. Such an occurrence increases the force a medical practitioner must apply to the device to deploy the electrodes in tissue.

[0080] FIG. **4**A shows another variation of an aspect for use with variations of the inventive device where the electrodes **120**, **122** in the array have a curved or arcuate profile. When actuated, the electrodes **120**, **122** rotate into the tissue **10**. Such a configuration may rely on a cam type mechanism (e.g., where the electrode plate and electrode rely on a cam-follower type motion to produce rotation of the electrodes).

[0081] The electrodes **120**, **122** may have a curved shape similar to that of suture needles, and/or may be fabricated from a shape memory alloy that is set in a desired curve. As shown in FIG. **4**B, as the electrodes **120**, **122** rotate into tissue, the rotational movement substantially causes a transverse force within the tissue rather than a normal force to the tissue. Accordingly, there is less tissue deformation as the electrodes penetrate the tissue allowing for ease of insertion.

[0082] FIG. **4**B illustrates the first and second electrodes **120**, **122** within tissue. The depth of insertion of these electrodes may be controlled by selecting a proper combination of electrode length and radius of curvature.

[0083] FIG. **4**C illustrates another variation of curved electrodes. In this variation, the electrodes may be configured to overlap. Such overlap results in the active electrode area being close in proximity to better control the current path between electrodes.

[0084] FIG. **5**A shows another electrode configuration for use with variations of the inventive device. As illustrated, the electrodes **120**, **122** may be placed at an oblique angle A relative to the face plate **104** or treatment unit **102**. FIG. **5**A illustrates the condition as the electrodes **120**, **122** approach the tissue **10**. FIG. **5**B shows the electrodes **120**, **122** being advanced towards each other as are placed in tissue **10**. The angle of the electrodes **120**, **122** creates a lateral or transverse force on the tissue **10** that serves to place a portion of the tissue in a state of traction.

[0085] FIG. **5**C shows a variation in which the electrodes **120**, **122** approach the tissue at an oblique angle A but where the electrodes are directed away from one another. Again, this configuration provides an opposing force on the tissue **10** between the electrodes as the electrodes **120**, **122** penetrate the tissue. FIG. **5**D shows the electrodes after they are inserted. Again, such a configuration reduces the force required to place the electrodes within tissue.

[0086] In the above configuration, it may be necessary to have one or more electrode plates **104** as an electrode moves along two or more dimensions. However, various additional configurations may be employed to produce the desired effects.

[0087] FIGS. **6**A-**6**C illustrate additional variations of electrodes **106** for use within the current devices. In these cases, the electrode **106** rotates as it penetrates tissue. FIG. **6**A shows a rotating blade-type configuration where part or all of the blade may have an exposed conductive surface for establishing a current path. Alternatively, a single blade may have both the poles of the circuit such that the electrode pair is on a single electrode.

[0088] FIG. **6**B illustrates a cork-screw or helical type electrode. FIG. **6**C shows an electrode **106** having a threaded portion **132**.

[0089] Variations of the present device may include treatment units having features to allow for treatment of contoured surfaces. For example, FIG. **7**A illustrates a contoured faceplate **104**. The contour of the faceplate **104** may be selected depending on the intended area of treatment. For example, a medical practitioner may have a range of contoured surfaces and could choose one depending on the shape of patient's face. In the illustrated variation, the electrode plate **118** may also be contoured (e.g., to match the faceplate or otherwise). As shown, the electrodes **120**, **122** can be sized such that a uniform length extends beyond the faceplate. However, variations also include electrodes having varying lengths that extend from the faceplate.

[0090] FIG. **7**B illustrates a variation having a double spring configuration. The first spring **134** is placed between the faceplate **104** and the electrode plate **118**. One or more additional springs are placed on the electrodes **120**, **122**. Again, such a configuration assists in placing the faceplate **104** against tissue as well as adjusting for contours in the skin surface.

[0091] FIG. **8**A illustrates another variation of a treatment unit **200** for use in accordance with the principles discussed herein. In this variation, the unit **200** includes a body portion **202** from which a cannula or introducer member **204** extend at an oblique angle relative to a tissue engagement surface **206**. As described below, the ability to insert the electrodes (not shown) into the tissue at an oblique angle increases the treatment area and allows for improved cooling at the tissue surface. Although the variation only shows a single array of introducers for electrodes, variations of the invention may include multiple arrays of electrodes. In addition, the devices and systems described below may be combined with the features described herein to allow for improved penetration of tissue. The devices of the present invention may have an angle A of 15 degrees. However, the angle may be anywhere from ranging between 5 and 85 degrees.

[0092] Although the introducer member **204** is shown as being stationary, variations of the device include introducer

members that are slidable on the electrodes. For example, to ease insertion of the electrode, the electrode may be advanced into the tissue. After the electrode is in the tissue, the introducer member slides over the electrode to a desired location. Typically, the introducer member is insulated and effectively determines the active region of the electrode. In another variation using RF energy, the introducer member may have a return electrode on its tip. Accordingly, after it advances into the tissue, application of energy creates current path between the electrode and the return electrode on the introducer.

[0093] The body **202** of the electrode device **200** may also include a handle portion **208** that allows the user to manipulate the device **200**. In this variation, the handle portion **208** includes a lever or lever means **210** that actuates the electrodes into the tissue (as discussed in further detail below).

[0094] As discussed above, the electrode device **200** can be coupled to a power supply **114** with or without an auxiliary unit **116** via a connector or coupling member **112**. In some variations of the device, a display or user interface can be located on the body of the device **200** as discussed below.

[0095] FIG. **8**B illustrates a partial side view of the electrodes **212** and tissue engaging surface **206** of the electrode device of FIG. **8**A. As shown, the electrodes **212** extend from the device **200** through the cannula **204**. In alternate variations, the electrodes can extend directly from the body of the device or through extensions on the device.

[0096] As shown, the electrodes **212** are advanceable from the body **202** (in this case through the introducers **204**) in an oblique angle A as measured relative to the tissue engagement surface **206**. The tissue engagement surface **206** allows a user to place the device on the surface of tissue and advance the electrodes **212** to the desired depth of tissue. Because the tissue engagement surface **206** provides a consistent starting point for the electrodes, as the electrodes **212** advance from the device **202** they are driven to a uniform depth in the tissue.

[0097] For instance, without a tissue engagement surface, the electrode **212** may be advanced too far or may not be advanced far enough such that they would partially extend out of the skin. As discussed above, either case presents undesirable outcomes when attempting to treat the dermis layer for cosmetic affects. In cases where the device is used for tumor ablation, inaccurate placement may result in insufficient treatment of the target area.

[0098] FIG. **8**C illustrates a magnified view of the electrode entering tissue **20** at an oblique angle A with the tissue engaging surface **206** resting on the surface of the tissue **20**. As is shown, the electrode **212** can include an active area **214**. Generally, the term "active area" refers to the part of the electrode through which energy is transferred to or from the tissue. For example, the active area could be a conductive portion of an electrode, it can be a resistively heated portion of the electrode, or even comprise a window through which energy transmits to the tissue. Although this variation shows the active area **214** as extending over a portion of the electrode, variations of the device include electrodes **212** having larger or smaller active areas **214**.

[0099] In any case, because the electrodes **212** enter the tissue at an angle A, the resulting region of treatment **152**, corresponding to the active area **214** of the electrode is larger than if the needle were driven perpendicular to the tissue surface. This configuration permits a larger treatment area with fewer electrodes **212**. In addition, the margin for error of locating the active region **214** in the desired tissue region is greater since the length of the desired tissue region is greater at angle A than if the electrode were deployed perpendicularly to the tissue.

[0100] As noted herein, the electrodes **212** may be inserted into the tissue in either a single motion where penetration of the tissue and advancement into the tissue are part of the same movement or act. However, variations include the use of a spring mechanism or impact mechanism to drive the electrodes **212** into the tissue. Driving the electrodes **212** with such a spring-force increases the momentum of the electrodes as they approach tissue and facilitates improved penetration into the tissue. As shown below, variations of the devices discussed herein may be fabricated to provide for a dual action to insert the electrodes. For example, the first action may comprise use of a spring or impact mechanism to initially drive the electrodes to simply penetrate the tissue. Use of the spring force or impact mechanism to drive the electrodes may overcome the initial resistance in puncturing the tissue. The next action would then be an advancement of the electrodes so that they reach their intended target site. The impact mechanism may be spring driven, fluid driven or via other means known by those skilled in the art. One possible configuration is to use an impact or spring mechanism to fully drive the electrodes to their intended depth.

[0101] FIG. **8**D illustrates an example of the benefit of oblique entry when the device is used to treat the dermis **18**. As shown, the length of the dermis **18** along the active region **214** is greater than a depth of the dermis **18**. Accordingly, when trying to insert the electrode in a perpendicular manner, the shorter depth provides less of a margin for error when trying to selectively treat the dermis region **18**.

[0102] Inserting the electrode at angle A also allows for direct cooling of the surface tissue. As shown in FIG. **8**C, the area of tissue on the surface **156** that is directly adjacent or above the treated region **152** (i.e., the region treated by the active area **214** of the electrode **212**) is spaced from the entry point by a distance or gap **154**. This gap **154** allows for direct cooling of the entire surface **156** adjacent to the treated region **152** without interference by the electrode or the electrode mounting structure. In contrast, if the electrode were driven perpendicularly to the tissue surface, then cooling must occur at or around the perpendicular entry point.

[0103] FIG. **8**E illustrates one example of a cooling surface **216** placed on body structure or tissue **20**. As shown, the electrode **212** enters at an oblique angle A such that the active region **214** of the electrode **212** is directly adjacent or below the cooling surface **216**. In certain variations, the cooling surface may extend to the entry point (or beyond) of the electrode **212**. However, it is desirable to have the cooling surface **216** over the electrode's active region **214** because the heat generated by the active region **212** will be greatest at the surface **156**. In some variations, devices and methods described herein may also incorporate a cooling source in the tissue engagement surface.

[0104] The cooling surface **216** may be any cooling mechanism known, by those skilled in the art. For example, it may be a manifold type block having liquid or gas flowing through for convective cooling. Alternatively, the cooling surface **216** may be cooled by a thermoelectric cooling device (such as a fan or a Peltier-type cooling device). In such a case, the cooling may be driven by energy from the

electrode device thus eliminating the need for additional fluid supplies. One variation of a device includes a cooling surface **216** having a temperature detector **218** (thermocouple, RTD, optical measurement, or other such temperature measurement device) placed within the cooling surface. The device may have one or more temperature detectors **218** placed anywhere throughout the cooling surface **216** or even at the surface that contacts the tissue.

[0105] In one application, the cooling surface **216** is maintained at or near body temperature. Accordingly, as the energy transfer occurs causing the temperature of the surface **156** to increase, contact between the cooling surface **216** and the tissue **20** shall cause the cooling surface to increase in temperature as the interface reaches a temperature equilibrium. Accordingly, as the device's control system senses an increase in temperature of the cooling surface **216** additional cooling can be applied thereto via increased fluid flow or increased energy supplied to the Peltier device.

[0106] While the cooling surface may comprise any commonly known thermally conductive material, metal, or compound (e.g., copper, steel, aluminum, etc.). Variations of the devices described herein may incorporate a translucent or even transparent cooling surface. In such cases, the cooling device will be situated so that it does not obscure a view of the surface tissue above the region of treatment.

[0107] In one variation, the cooling surface can include a single crystal aluminum oxide (Al_2O_3). The benefit of the single crystal aluminum oxide is a high thermal conductivity optical clarity, ability to withstand a large temperature range, and the ability to fabricate the single crystal aluminum oxide into various shapes. A number of other optically transparent or translucent substances could be used as well (e.g., diamond, other crystals or glass).

[0108] FIG. **8**F illustrates another aspect for use with variations of the devices and methods described herein. In this variation, the device **200** includes two arrays of electrodes **212**, **222**. As shown, the first plurality **212** is spaced evenly apart from and parallel to the second plurality **222** of electrodes. In addition, as shown, the first set of electrodes **212** has a first length while the second set of electrodes **222** has a second length, where the length of each electrode is chosen such that the sets of electrodes **212**, **222** extend into the tissue **20** by the same vertical distance or length **158**. Although only two arrays of electrodes are shown, variations of the invention include any number of arrays as required by the particular application. In some variations, the lengths of the electrodes **212**, **222** are the same. However, the electrodes will be inserted or advanced by different amounts so that their active regions penetrate a uniform amount into the tissue. As shown, the cooling surface may include more than one temperature detecting element **218**.

[0109] FIG. **8**F also illustrates a cooling surface **216** located above the active regions **214**, **224** of the electrodes. In such a variation, it may be necessary for one or more of the electrode arrays to pass through a portion of the cooling surface **216**. Alternative variations of the device include electrodes that pass through a portion of the cooling device (such as the Peltier device described below).

[0110] FIG. **8**G shows an aspect for use with methods and devices of the invention that allows marking of the treatment site. As shown, the device **200** may include one or more marking lumens **226**, **228** that are coupled to a marking ink **220**. During use, a medical practitioner may be unable to see areas once treated. The use of marking allows the practitioner to place a mark at the treatment location to avoid excessive treatments. As shown, a marking lumen **226** may be placed proximate to the electrode **212**. Alternatively, or in combination, marking may occur at or near the cooling surface **216** since the cooling surface is directly above the treated region of tissue. The marking lumens may be combined with or replaced by marking pads. Furthermore, any type of medically approved dye may be used to mark. Alternatively, the dye may comprise a substance that is visible under certain wavelengths of light. Naturally, such a feature permits marking and visualization by the practitioner given illumination by the proper light source but prevents the patient from seeing the dye subsequent to the treatment.

[0111] FIG. **9**A illustrates a variation of a device **200** that may incorporate the aspects described herein. As shown, the device **200** includes a body portion **202** having a handle **208** and an actuating trigger or lever **210**. The device **200** couples power supply and other necessary auxiliary components though they are not illustrated. In this variation, the electrodes may be placed behind an electrode covering **230**. The covering **230** may be purely cosmetic or may function as the introducers discussed above. In the illustrated variation, the cooling surface **216** is coupled to a Peltier cooling device **234**. Although the cooling surface **216** is shown as being retracted from the tissue engagement surface **206**, the cooling surface may be lowered when necessary to maintain the surface tissue during treatment. As noted above, variations of the device may include an impact means to drive the electrodes into tissue. In this variation, the device **200** includes a reset knob **232** so that the practitioner may re-engage the impact mechanism or spring mechanism between treatments. Alternatively, the reset-knob may be configured to withdraw the electrodes from the tissue and into the device after treatment.

[0112] FIG. **9**B illustrates a cross-sectional side view of the device **200** of FIG. **9**A. As shown, the lever **210** is coupled to an electrode base or electrode plate **228** to drive the electrodes **212** into tissue. In this variation, the actuating assembly also includes an impact mechanism **236** that, at least, initially drives the electrodes **212** into tissue to overcome the resistance when penetrating the surface of tissue.

[0113] FIG. **9**C illustrates a side view of the device **200** of FIG. **9**A when the cooling surface **216** is parallel to the tissue engaging surface **206** and directly above the electrodes **212** when advanced from the device body **202**. In this variation, the electrodes **212** at least partially extend through the cooling surface **216**. However, the cooling surface **216** is still able to make direct contact with a surface of tissue directly above the active area of the electrodes.

[0114] FIG. **9**C also shows a Peltier cooling device **234** coupled to the cooling surface **216**. As noted herein, any number of cooling sources may be used. However, in this variation, the Peltier cooling device **234** eliminates the need for a fluid source. In some cases, the cooling device **234** can be powered using the same power supply that energizes the electrodes **212**. Such a configuration provides a more compact design that is easier for a medical practitioner to manipulate.

[0115] FIG. **9**D illustrates a bottom view of the device **200** of FIG. **9**C. As shown the electrodes **212** directly below the cooling surface **216** when extended from the body of the device **202**.

[0116] FIG. **10**A illustrates another variation of an electrode device **200**. In this variation, the lever **210** or actuator

is on the top of the handle portion **208**. The lever **210** may be manually operated in that the medical practitioner advances the lever **210** to advance the electrodes **212** into tissue. Alternatively, or in combination a spring mechanism or even a source of compressed gas (stored in the body **202** or coupled via a connector **112**) may be used to drive the electrodes **212** from the introducers **204** and into the tissue.

[0117] FIG. **10**B illustrates a side view of the device **200** of FIG. **10**A. As shown, the tissue engaging surface **206** is parallel to the ends of the introducers **204**. Accordingly, to deliver the electrodes **212**, **222** to a uniform depth, the lengths of the electrodes **212**, **222** may vary accordingly.

[0118] FIG. **11** shows a variation of a device **200** having additional aspects for combination with the methods and devices described herein. As shown, the device **200** may include an electrode covering **230** to shield the electrodes from damage or view. In the latter case, hiding the electrodes from view may be desirable for additional patient comfort. FIG. **11** also illustrates a user interface **240**. The user interface **240** may display such information as whether the system is ready for treatment, the temperature of the cooling surface, the duration of the particular treatment, the number of treatments or any other information regarding the procedure or patient.

[0119] The variations in FIGS. **10**A-**11** are shown without a cooling surface. However, incorporating cooling surfaces with the respective device bodies is within the scope of this disclosure.

[0120] FIGS. **12**A-**12**D illustrate variations of electrodes for use with the systems and methods described herein. Depending upon the application, it may be desirable to provide an electrode **212** that has a variable resistance along the active region of the electrode **212**. FIGS. **12**A-**12**D illustrate a partial example of such electrodes. As shown in FIGS. **12**A and **12**B, an electrode may have concentric or spiral bands that create varying ranges of impedance **242**, **244**, **246**, **248**, and **250** along the electrode **212**. In addition, as shown in FIG. **12**C, the electrode **212** may have regions **242**, **244**, **246**, and **248** along the electrode of varying resistance. FIG. **12**D illustrates a similar concept where the regions of resistance **242**, **244**, **246** run in longitudinal stripes along the electrode **212**. These configurations may be fabricated through spraying, dipping, plating, anodizing, plasma treating, electro-discharge, chemical applications, etching, etc.

[0121] FIGS. **13**A-**13**B illustrate examples of system configurations that can be incorporated into any conventional electrode array or into the devices described above using RF energy. As shown, in this example the electrode array **262** comprises a 3×6 array of electrode. Each electrode in the array **262** is configured to energize separately. This configuration provides the ability of any given pair of electrodes to form a circuit for treating tissue. In one example, in the variation of FIG. **13**A, the power supply energizes adjacent electrode pairs **264**, **266**. This configuration generates the smallest treatment area in the electrode array **262**. FIG. **13**B illustrates a situation where the farthest electrode pairs **264**, **266** within the array **262** are triggered to form a current path **268**. One benefit of this configuration is that a single electrode array may form a number of patterns based on various combinations of pairs that may be formed in the array. The array may be able to provide a denser treatment or more uniform tissue heating. The treatment can deliver targeted therapy to key areas of tissue. In one variation, the electrode array may trigger various pairs sequentially during a single insertion.

[0122] Although the systems described herein may be used by themselves, the invention includes the methods and devices described above in combination with moisturizer, ointments, etc. that increase the resistivity of the epidermis. Accordingly, prior to the treatment, the medical practitioner can prepare the patient by increasing the resistivity of the epidermis. During the treatment, because of the increased resistivity of the epidermis, energy would tend to flow in the dermis.

[0123] The above variations are intended to demonstrate the various examples of embodiments of the methods and devices of the invention. It is understood that the embodiments described above may be combined or the aspects of the embodiments may be combined in the claims.

1. A method for applying energy to tissue located beneath a surface layer of the tissue comprising:
- providing an energy transfer unit comprising a faceplate having a plurality of openings and a plurality of electrodes moveable through the faceplate;
- placing the faceplate in contact with the surface layer;
- drawing and maintaining the surface layer of tissue against the openings in the faceplate;
- advancing the electrodes through the surface tissue and into the tissue;
- applying energy with a portion of the electrode beneath the skin to create a thermal injury to tissue beneath the skin.

2. The method of claim **1**, where drawing and maintaining the surface layer of tissue against the openings in the faceplate comprises drawing a vacuum through the openings.

3. The method of claim **1**, where the each electrode extends through one opening.

4. The method of claim **1**, where the electrodes are mounted on an electrode plate, where the electrode plate is proximally spaced from the faceplate.

5. The method of claim **4**, further comprising withdrawing the electrodes proximally to the faceplate prior to placing the faceplate in contact with the surface layer and, advancing the electrodes through the tissue comprises advancing the electrodes distally to the faceplate and into the tissue.

6. The method of claim **5**, further comprising spring loading the faceplate such that advancing the electrode through the tissue comprises advancing the electrodes through the tissue using a spring-force.

7. The method of claim **4**, further comprising inducing a vibration in the electrode as the electrodes advance through tissue.

8. The method of claim **7**, where inducing a vibration in the electrodes comprises applying ultrasound energy to the electrodes.

9. The method of claim **4**, further comprising placing a portion of the surface tissue in traction prior to advancing electrodes through the surface tissue.

10. The method of claim **9**, where each electrode extends through an opening in an introducer member, where pressing the introducer member against the surface tissue places the surface tissue in traction.

11. The method of claim **9**, where adjacent electrodes are placed at an oblique angle such that as the electrodes engage tissue, the tissue is placed in traction.

12. The method of claim **2**, where the electrodes comprise a curved shape, and where advancing the electrodes comprise rotating the electrodes into tissue.

13. The method of claim **12**, further comprising advancing the electrodes into tissue until at least one pair of electrodes overlaps in a substantially horizontal manner within the tissue.

14. The method of claim **4**, where placing the faceplate in contact with the surface layer comprises applying placing the faceplate against the surface layer with sufficient force to substantially flatten the surface layer; and where advancing the electrodes comprises advancing the electrodes until the electrode plate contacts the faceplate, and subsequently withdrawing the electrode plate a predetermined distance.

15. The method of claim **1**, where the plurality of electrodes comprise a plurality of electrode pairs, each electrode pair comprising an active and return electrode, and where each electrode pair is coupled to an independent channel of a power supply.

16. The method of claim **15**, where each electrode pair is spaced a sufficient distance from an adjacent electrode pair to minimize formation of a cross-current path between adjacent electrode pairs.

17. The method of claim **16**, where each active and return electrode is spaced sufficiently close to form a treatment-current path between active and return electrodes and minimizes formation of the cross-current path between adjacent electrode pairs.

18. The method of claim **17**, where spacing between active and return electrodes is between 1 and 3 mm, and spacing between adjacent electrode pairs is at least 5 mm.

19. The method of claim **15**, where each independent channel of the power supply provides no more than 1 watt of energy.

20. The method of claim **15**, where the power supply is configured to energize adjacent electrode pairs at different times.

21. The method of claim **15**, where the power supply is configured to prevent energizing any electrode pair until the electrodes advance distally to the faceplate.

22. The method of claim **1**, where the electrode comprise helical shaped electrodes and where advancing the electrodes through the surface tissue and into the tissue comprises rotating the helical electrode into the tissue.

23. The method of claim **22**, where the helical shaped electrode comprises a helical blade.

24. A method for applying energy to tissue located beneath a surface layer of the tissue comprising:

providing an energy transfer unit comprising an array of electrodes adjacent to the surface layer;

placing a portion of the surface layer that is adjacent to each electrode in a state of traction;

advancing at least one of the electrodes through the surface layer;

applying energy to at least one of the electrodes to create a thermal injury to tissue beneath the surface layer.

25. The method of claim **24**, where the energy transfer unit further comprises a faceplate having a plurality of openings, where the array of electrodes is moveable through the openings.

26. The method of claim **25**, where the electrode array is mounted on an electrode plate, where the electrode plate is proximally spaced from the faceplate.

27. The method of claim **25**, further comprising withdrawing the electrodes proximally to the faceplate prior to placing the faceplate in contact with the surface layer and, advancing the electrodes through the tissue comprises advancing the electrodes distally to the faceplate and into the tissue.

28. The method of claim **25**, further comprising spring loading the faceplate such that advancing the electrode through the tissue comprises advancing the electrodes through the tissue using a spring-force.

29. The method of claim **25**, further comprising inducing a vibration in the electrodes as the electrodes advance through tissue.

30. The method of claim **29**, where inducing a vibration in the electrodes comprises applying ultrasound energy to the electrodes.

31. The method of claim **24**, where each electrode extends through an opening in an introducer member, where pressing the introducer member against the surface layer places the surface layer in traction.

32. The method of claim **24**, where adjacent electrodes are placed at an oblique angle such that as the electrodes engage tissue, the tissue is placed in traction.

33. The method of claim **24**, where the electrode array comprises a plurality of electrode pairs, each electrode pair comprising an active and return electrode, and where each electrode pair is coupled to an independent channel of a power supply.

34. The method of claim **33**, where each electrode pair is spaced a sufficient distance from an adjacent electrode pair to minimize formation of a cross-current path between adjacent electrode pairs.

35. The method of claim **33**, where each active and return electrode is spaced sufficiently close to form formation of a treatment-current path between active and return electrodes and minimizes formation of the cross-current path between adjacent electrode pairs.

36. The method of claim **35**, where spacing between active and return electrodes is between 1 and 3 mm, and spacing between adjacent electrode pairs is at least 5 mm.

37. The method of claim **33**, where each independent channel of the power supply provides no more than 1 watt of energy.

38. The method of claim **33**, where the power supply is configured to energize adjacent electrode pairs at different times.

39. The method of claim **33**, where the power supply is configured to prevent energizing any electrode pair until the electrodes advance distally to the faceplate.

40. An electrode array for treating a dermis layer of tissue, the array comprising:

a faceplate comprising a plurality of openings;

a plurality of electrode pairs each pair comprising an active and a return electrode, where the electrode pairs extend through openings in the faceplate;

at least one electrode plate carrying the plurality of electrode pairs, where the electrode plate and face plate are moveable relative to each other to allow for axial movement of the electrode pairs through the openings.

41. The electrode array of claim **40**, further comprising a power supply having a plurality of independent channels where each channel is adapted to be coupled to one electrode pair.

42. The electrode array of claim **41**, where the power supply is configured to energize adjacent electrode pairs at different times.

43. The electrode array of claim **41**, where each independent channel of the power supply provides no more than 1 watt of energy to each electrode pair.

44. The electrode array of claim **41**, further comprising a vacuum source fluidly coupled to the openings, such that upon the application of a vacuum and when the faceplates in contact with an epidermis, the epidermis is drawn and maintained against the faceplate.

45. The electrode array of claim **41**, where each electrode is moveable through an opening in an introducer member, where pressing the introducer member against the surface tissue places the surface tissue in traction.

46. The electrode array of claim **41**, where adjacent electrodes are placed at an oblique angle such that as the electrodes engage tissue, the tissue is placed in traction.

47. The electrode array of claim **41**, where the active and return electrodes comprise a curved shape, such that upon rotation, the electrode pairs may penetrate tissue.

48. The electrode array of claim **47**, further comprising advancing the electrodes into tissue until at least one pair of electrodes overlaps in a substantially horizontal manner within the tissue.

49. The electrode array of claim **47**, where each electrode pair is spaced a sufficient distance from an adjacent electrode pair to minimize formation of a cross-current path between adjacent electrode pairs.

50. The electrode array of claim **49**, where each active and return electrode is spaced sufficiently close to form a treatment-current path between active and return electrodes and minimizes formation of the cross-current path between adjacent electrode pairs.

51. The electrode array of claim **50**, where spacing between active and return electrodes is between 1 and 3 mm, and spacing between adjacent electrode pairs is at least 5 mm.

52. The electrode array of claim **41**, where each independent channel of the power supply provides no more than 1 watt of energy.

53. The electrode array of claim **41**, where the power supply is configured to energize adjacent electrode pairs at different times.

54. The electrode array of claim **41**, where the power supply is configured to prevent energizing any electrode pair until the electrodes advance distally to the faceplate.

55.-**118**. (canceled)

* * * * *