Instrument Valves and Manifolds

SCHNEIDER Armaturen

Hook-ups

Technical Explanations

Hook-ups for pressure measurement

- mounted directly to the process line
- remote mounting

Hook-ups for differential pressure measurement

- mounted directly to the process line
- remote mounting

Hook-ups for level measurement

Accessory kits

Preface

Technical Explanations **1**

Hook-ups
PD

Pressure instruments mounted directly to the process line

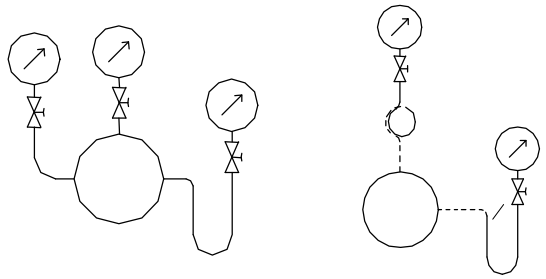

2

Hook-ups
PR

Pressure instruments mounted to racks or in enclosures etc.

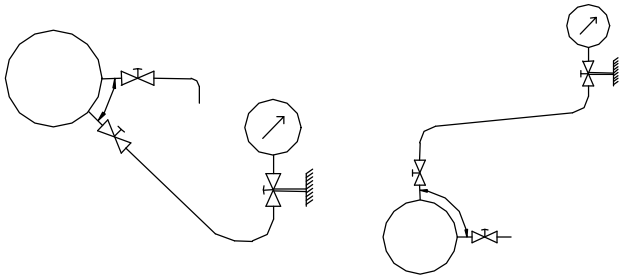

3

Hook-ups
DPD

Differential pressure instruments mounted directly to the process line

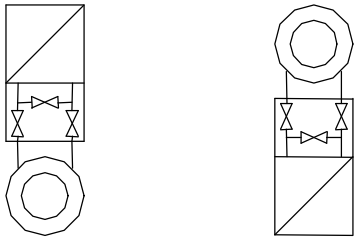

4

Hook-ups
DPR

Differential pressure instruments mounted to racks or in enclosures etc.

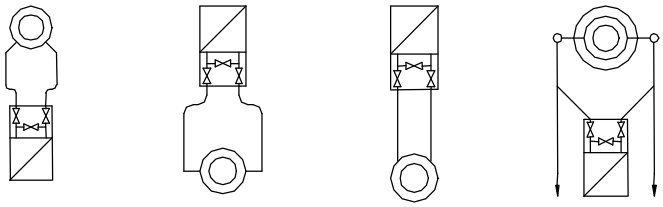

5

Hook-ups
F

Level measurements

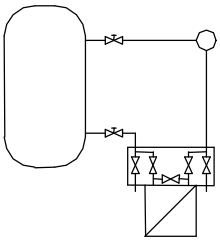

6

Appendix **7**

1. Preface

Dear user

ARMATURENFABRIK FRANZ SCHNEIDER GmbH & Co. KG tries to make work easier for the user of our products and wants to give advice on planning and project work.

That is why we put together for you a selection of hook-ups which are typical from our point of view.

The individual sheets are structured in such a way that you can take the information you need about the relevant products and the mounting accessory required for your particular application.

Beyond these "typical cases", there are of course numerous other variants possible.

If the range of application shown here doesn't meet your special requirements, or if your marginal conditions demand a modified starting-point for the solution as shown in the illustration, we will be pleased to help you elaborating the hook-ups that meet your requirements one hundred per cent or we will elaborate the hook-ups for you.

Please contact:

National sales	Mr. Rüter	Tel.: +49 (0)7133/101-146 Fax: +49 (0)7133/101-148 E-Mail: H.Rueter@AS-Schneider.com
International sales	Mr. U. Frank	Tel.: +49 (0)7133/101-129 Fax: +49 (0)7133/101-180 E-Mail: U.Frank@AS-Schneider.com

ARMATURENFABRIK FRANZ SCHNEIDER GmbH & Co. KG plans to enlarge these hook-ups step by step according to the continously growing experience, i. e. we will insert newly-gained knowledge in the hook-ups on hand at irregular intervals and we will add new examples for application to this catalogue.

If you are interested in receiving regular information on the topic

- Alteration Service and New Hook-ups -

please take out and fill in the enclosed service page and send / fax it back to us.

The hook-ups are also available on CD-ROM or via Internet:

http://www.AS-Schneider.com

We wish you a successful application.

Axel Müller Director Instrumentation Division

Petitioner's Exhibit 1006 Page 3 of 94

1. Technical Explanations

The various hook-ups are arranged as follows:

Pressure Measurement

Pressure instruments mounted directly to the process line (PD)

Pressure instruments mounted to racks or in enclosures etc. (PR)

Condition of fluid inside process line

P D G 01

- **P** = Pressure
- **D** = Direct Mounting
- **G** = Gas
- **L** = Liquid
- **S** = Steam
- **01** = Consecutive Number

P R L 01

- **P** = Pressure
- **R** = Remote Mounting
- **G** = Gas
- **L** = Liquid
- **S** = Steam
- **01** = Consecutive Number

Condition of fluid inside process line	**liquid**		**gas**	
Condition of fluid in elbow 90° / syphon	liquid	completely vapourized	gas, partly condensed	completely liquefied
Hook-up PD **Pressure instruments mounted directly to the process line**	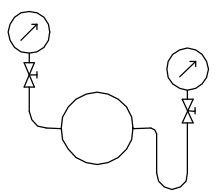	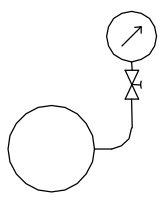	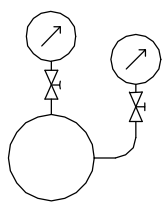	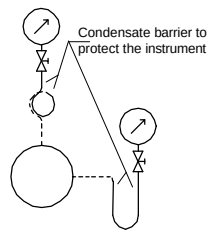
Condition of fluid inside impulse line	liquid	completely vapourized	gas, partly condensed	completely liquefied
Hook-up PR **Pressure instruments mounted to racks or in enclosures etc.**	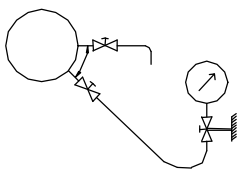	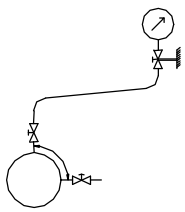	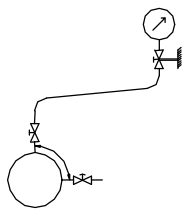	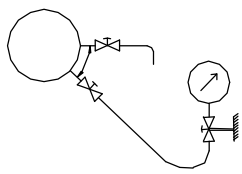
Example	water	liquefied gas	humid gas	vapour

Differential Pressure Measurement

Differential pressure instruments mounted directly to the process line (DPD)

Differential pressure instruments mounted to racks or in enclosures etc. (DPR)

Condition of fluid inside process line

DP D S 01

DP = Differential Pressure

D = Direct Mounting

G = Gas
L = Liquid
S = Steam

01 = Consecutive Number

DP R G/L 01

DP = Differential Pressure

R = Remote Mounting

G = Gas
L = Liquid
S = Steam

01 = Consecutive Number

Condition of fluid inside process line	**liquid**		**gas**	
Condition of fluid inside impulse line	liquid	completely vapourized	gas, partly condensed	completely liquefied
Hook-up DP	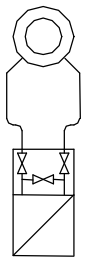	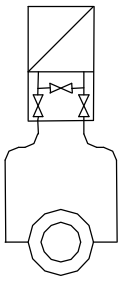	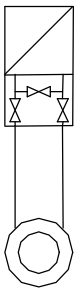	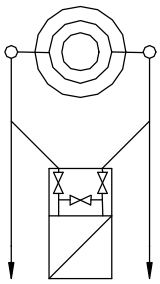
Example	water	liquefied gas	humid gas	vapour

We treat the following methods of differential pressure measurement:

- Flow measurement
- Differential pressure measurement (e. g. determination of differential pressure between 2 pipe lines)
- Level measurement (F01...)

These standard materials are included in the tables of the hook-ups:

Material	Material No.	Alloy Type / Steel Grade	UNS-No.
Brass	CW614N (2.0401)	Cu Zn 39 Pb 3	
	CW617N (2.0402)	Cu Zn 40 Pb 2	
Steel	1.0460	P250GH (C 22.8)	
	1.5415	16 Mo 3 (15 Mo 3)	
	1.7335	13 Cr Mo 4-5 (13 Cr Mo 4 4)	
	1.7380	10 Cr Mo 9-10	
Stainless steel	1.4571	X6 Cr Ni Mo Ti 17-12-2 / AISI 316Ti	S 31635
	1.4404	X2 Cr Ni Mo 17-12-2 / AISI 316L	S 31603

In case the a. m. standard materials do not fit the requirements, we supply the products in the following special materials (among others):

Material No.	Alloy Type / Steel Grade	UNS-No.
1.4439	X2 Cr Ni Mo N 17-13-5	
1.4539	X1 Ni Cr Mo Cu 25-20-5	N 08904
1.4541	X6 Cr Ni Ti 18-10	S 32100
1.4462	Duplex / X2 Cr Ni Mo N 22-5-3	S 31803
	Superduplex	S 32750 / S 32760
2.4360	Monel® 400 / Ni Cu 30 Fe	N 04400
2.4819	Hastelloy® C-276 / Ni Mo 16 Cr 15 W	N 10276
2.4610	Hastelloy® C-4 / Ni Mo 16 Cr 16 Ti	N 06455
	Titanium Gr. 2	R 50400
	6 Mo / 254SMO®	S 31254

Registered trademarks:

Hastelloy® is a registered trademark of Haynes International.
KEL-F® is a registered trademark of 3M Co.
Monel® is a registered trademark of International Nickel Company.
Perbunan® is a registered trademark of Bayer AG.
254SMO® is a registered trademark of AVESTA.

Subject to technical alterations.

Service Page

Reply to:

ARMATURENFABRIK
FRANZ SCHNEIDER GmbH & Co. KG
Bahnhofsplatz 12

74226 Nordheim

Tel.:	Switchboard	+49 (0)7133/101-0
	Sales Department	+49 (0)7133/101-129
Fax:		**+49 (0)7133/101-180**

Please send:

☐ Registration for "Alteration Service and New Hook-ups"

☐ Hook-ups on CD-ROM

My address:

Name: _____ Tel.: _____

Dept./Position:_____ Fax:_____

Company:

Stamp

_____
Date / Signature

Hook-ups
PD

Pressure instruments
mounted directly
to the process line

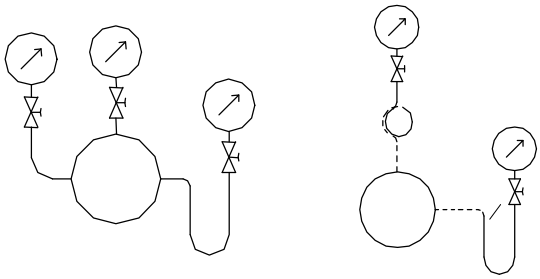

2

SCHNEIDER Armaturen	Hook-up:	Pressure Measurement	PDG01
	Condition of Fluid:	Gas	
	Max. Operating Pressure:	PB 400 bar	01/02

2

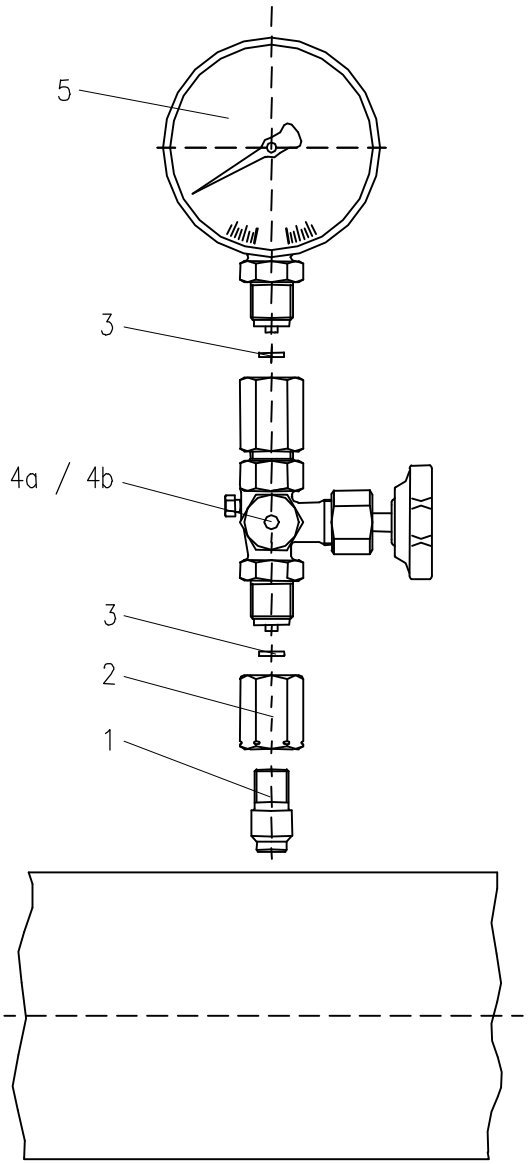

* different material

Pos.	Qty.	Designation	Part no. Brass	Part no. Steel	Part no. Stainless steel	Remark
1	1	Pressure tap	S006.07.103/St*	S006.07.103	S006.07.203	
2	1	Adjusting nut DIN 16 283	S006.00.000	S006.00.100	S006.00.200	
3	2	Sealing washer DIN EN 837-1	S006.03.003/Cu*	S006.03.003/Cu* *alternative* S006.03.004/Fe*	S006.03.007	
4a	1	Pressure gauge valve DIN 16 270 form A, without test connection male / female G 1/2	S004.16.000	S004.16.100	S004.16.200	
4b	1	Pressure gauge valve DIN 16 271 form A, with test connection male / female G 1/2	S004.17.000	S004.17.100	S004.17.200	
5	1	Instrument				

© This drawing is the exclusive property of ARMATURENFABRIK FRANZ SCHNEIDER GmbH & Co. KG. Without their consent it may not be reproduced or given to third parties.

SCHNEIDER Armaturen	Hook-up:	Pressure Measurement Valves with DVGW - Registration	PDG02
	Condition of Fluid:	Gas	
	Max. Operating Pressure:	PB 100 bar	01/02

2

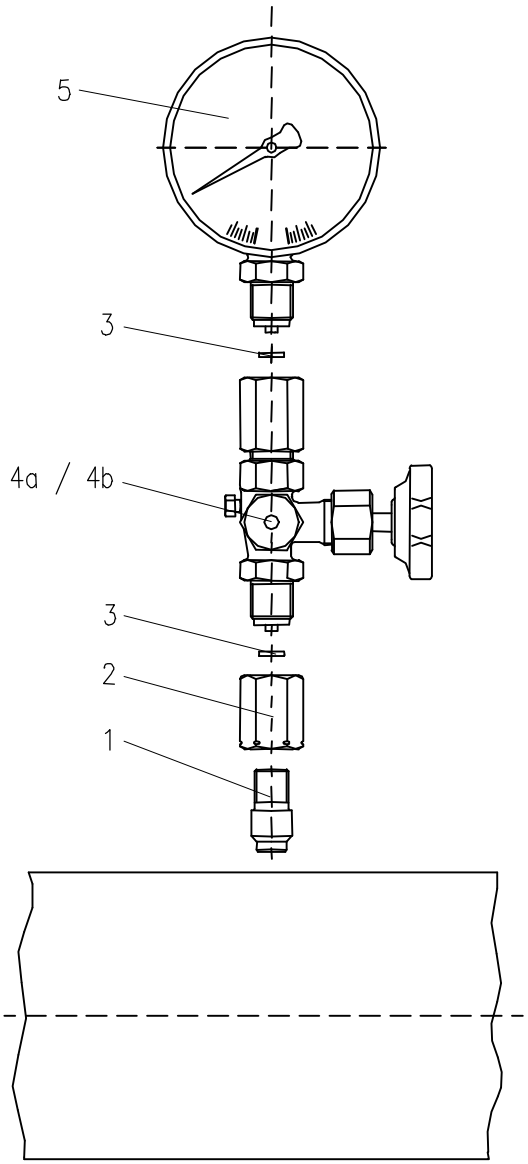

* different material

Pos.	Qty.	Designation	Part no. Brass	Part no. Steel	Part no. Stainless steel	Remark
1	1	Pressure tap	S006.07.103/St*	S006.07.103	S006.07.203	
2	1	Adjusting nut DIN 16 283	S006.00.000	S006.00.100	S006.00.200	
3	2	Sealing washer DIN EN 837-1 *alternative* with O-ring sealing	S006.03.003/Cu* S006.03.080.03	S006.03.003/Cu* *alternative* S006.03.004/Fe* S006.03.180.03	S006.03.007 S006.03.280.03	
4a	1	Pressure gauge valve sim. DIN 16 270 form A, without test connection male / female G 1/2 with DVGW - registration	S004.26.000	S004.26.100	S004.26.200	
4b	1	Pressure gauge valve sim. DIN 16 271 form A, with test connection male / female G 1/2 with DVGW - registration	S004.27.000	S004.27.100	S004.27.200	
5	1	Instrument				

© This drawing is the exclusive property of ARMATURENFABRIK FRANZ SCHNEIDER GmbH & Co. KG. Without their consent it may not be reproduced or given to third parties.

© This drawing is the exclusive property of ARMATURENFABRIK FRANZ SCHNEIDER GmbH & Co. KG. Without their consent it may not be reproduced or given to third parties.

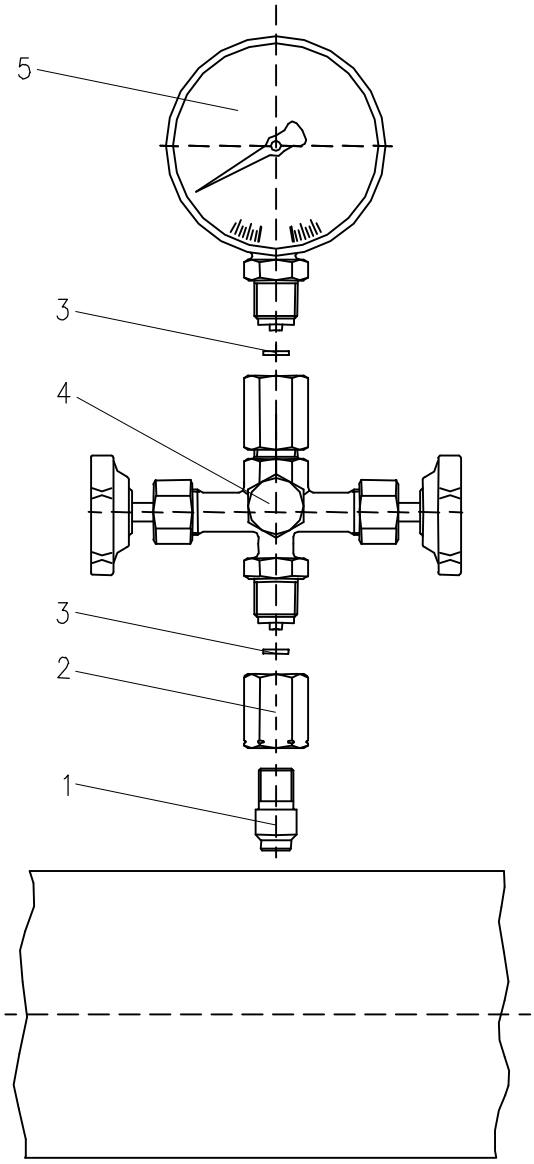

* different material

Pos.	Qty.	Designation	Part no.			Remark
			Brass	Steel	Stainless steel	
1	1	Pressure tap	S006.07.103/St*	S006.07.103	S006.07.203	
2	1	Adjusting nut DIN 16 283	S006.00.000	S006.00.100	S006.00.200	
3	2	Sealing washer DIN EN 837-1	S006.03.003/Cu*	S006.03.003/Cu* *alternative* S006.03.004/Fe*	S006.03.007	
4	1	Pressure gauge valve DIN 16 272 form A, with test connection male / female G 1/2	S004.60.000	S004.60.100	S004.60.200	
5	1	Instrument				

SCHNEIDER Armaturen	**Hook-up:**	**Pressure Measurement** **Valves with DVGW - Registration**	PDG04
	Condition of Fluid:	**Gas**	
	Max. Operating Pressure :	**PB 100 bar**	01/02

2

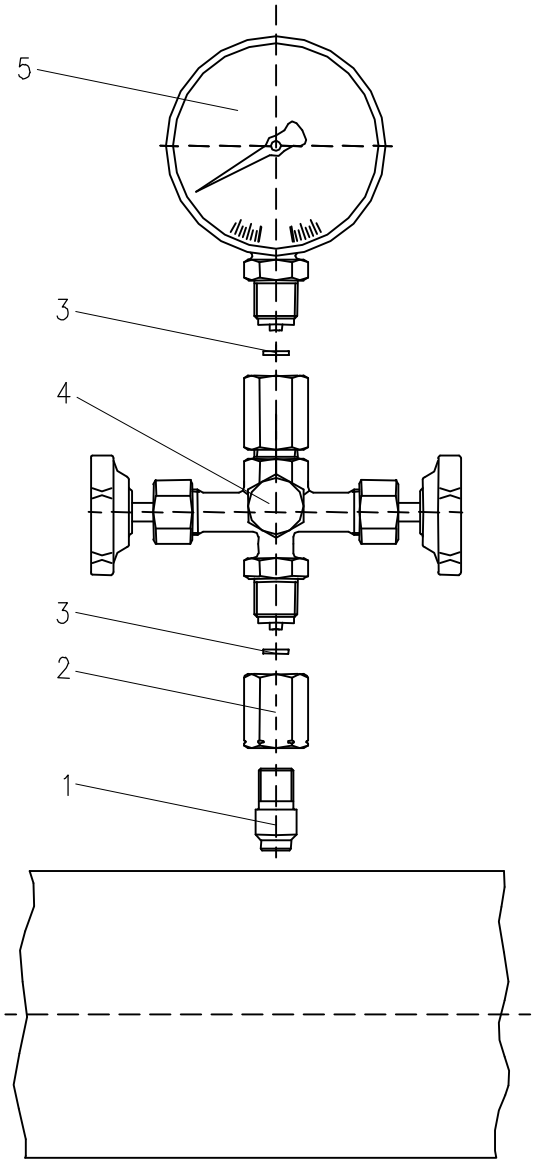

* different material

Pos.	Qty.	Designation	Part no.			Remark
			Brass	Steel	Stainless steel	
1	1	Pressure tap	S006.07.103/St*	S006.07.103	S006.07.203	
2	1	Adjusting nut DIN 16 283	S006.00.000	S006.00.100	S006.00.200	
3	2	Sealing washer DIN EN 837-1 *alternative* with O-ring sealing	S006.03.003/Cu* S006.03.080.03	S006.03.003/Cu* *alternative* S006.03.004/Fe* S006.03.180.03	S006.03.007 S006.03.280.03	
4	1	Pressure gauge valve sim. DIN 16 272 form A, with test connection male / female G 1/2 with DVGW - registration	S004.80.000	S004.80.100	S004.80.200	
5	1	Instrument				

© This drawing is the exclusive property of ARMATURENFABRIK FRANZ SCHNEIDER GmbH & Co. KG. Without their consent it may not be reproduced or given to third parties.

SCHNEIDER Armaturen	**Hook-up:** **Pressure Measurement** **Condition of Fluid:** **Gas** **Max. Operating Pressure:** **PB 420 bar**	PDG05 01/02

2

© This drawing is the exclusive property of ARMATURENFABRIK FRANZ SCHNEIDER GmbH & Co. KG. Without their consent it may not be reproduced or given to third parties.

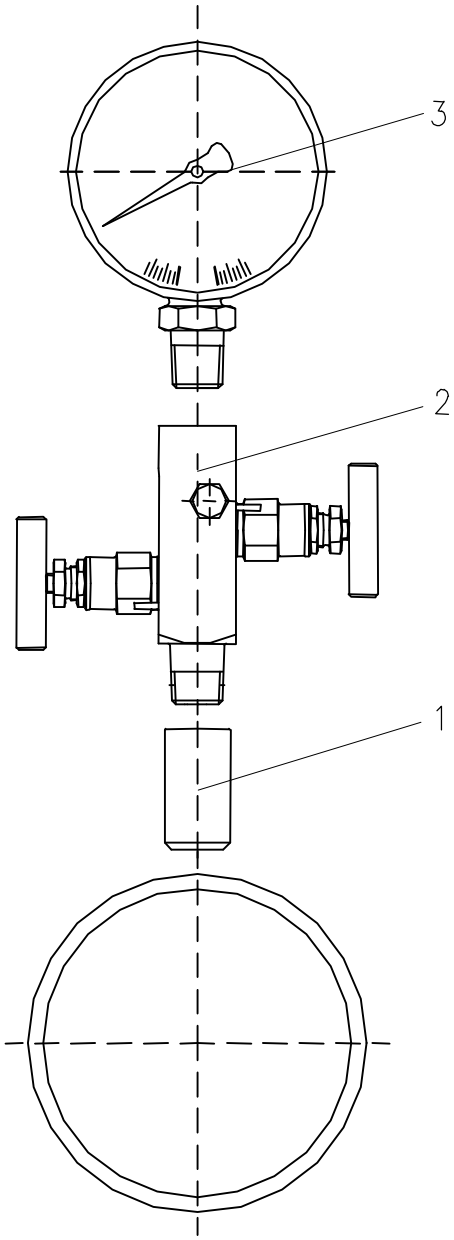

Pos.	Qty.	Designation	Part no.		Remark
			Steel	Stainless steel	
1	1	Pressure tap			
2	1	Block and bleed valve PN 420 male / female 1/2-14 NPT	N354.60.101.05	N354.60.401.05	
3	1	Instrument			

SCHNEIDER Armaturen	Hook-up:	Pressure Measurement Valves with DVGW - Registration	PDG06
	Condition of Fluid:	Gas	01/02
	Max. Operating Pressure:	PB 100 bar	

2

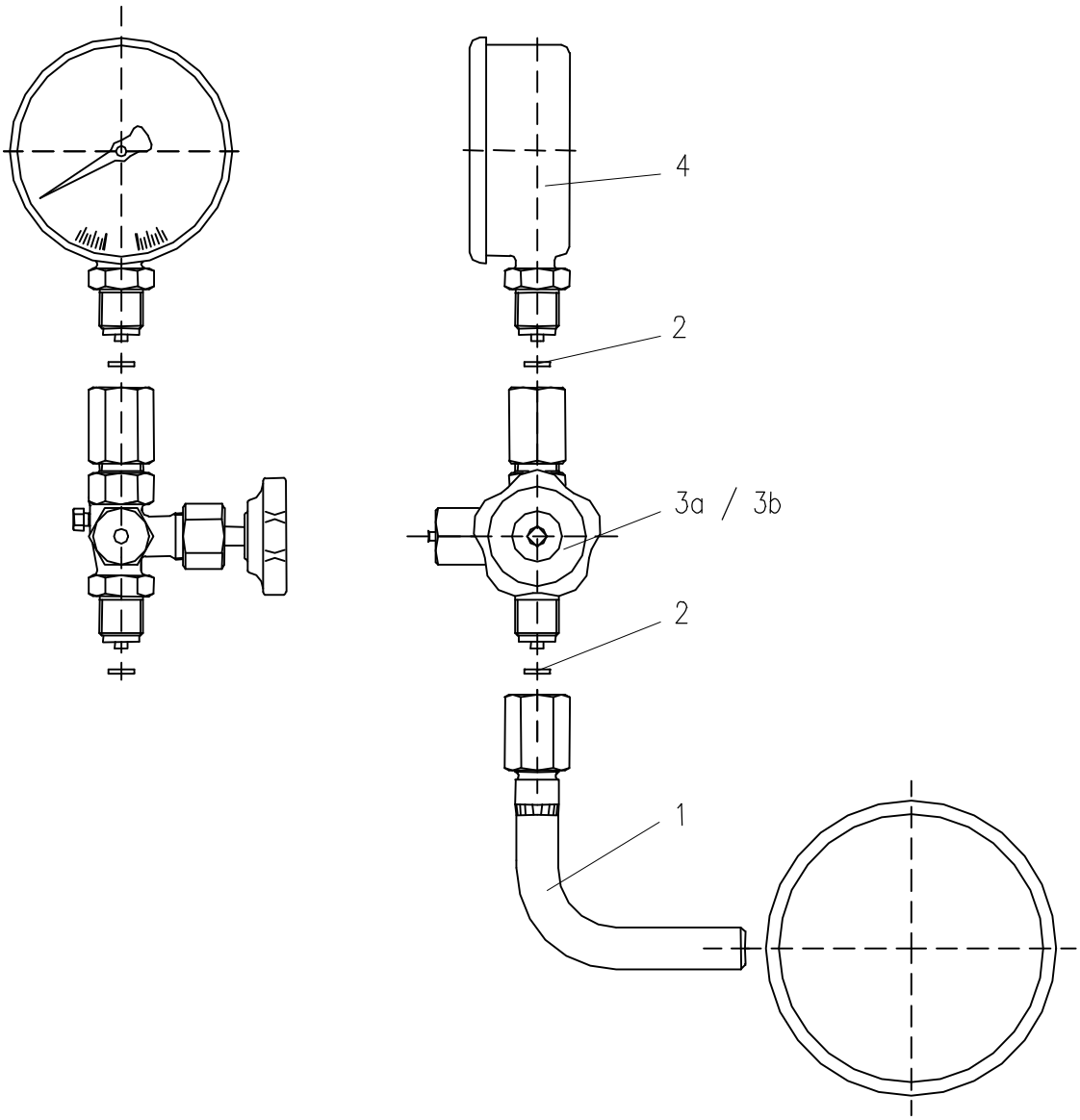

*different material

Pos.	Qty.	Designation	Part no. Brass	Part no. Steel	Part no. Stainless steel	Remark
1	1	Elbow 90°	S006.17.100.02/St*	S006.17.100.02	S006.17.200.02	
2	2	Sealing washer DIN EN 837-1 *alternative* with O-ring sealing	S006.03.003/Cu* S006.03.080.03	S006.03.003/Cu* *alternative* S006.03.004/Fe* S006.03.180.03	S006.03.007 S006.03.280.03	
3a	1	Pressure gauge valve sim. DIN 16 270 form A, without test connection male / female G 1/2 with DVGW - registration	S004.26.000	S004.26.100	S004.26.200	
3b	1	Pressure gauge valve sim. DIN 16 271 form A, with test connection male / female G 1/2 with DVGW - registration	S004.27.000	S004.27.100	S004.27.200	
4	1	Instrument				

© This drawing is the exclusive property of ARMATURENFABRIK FRANZ SCHNEIDER GmbH & Co. KG. Without their consent it may not be reproduced or given to third parties.

SCHNEIDER Armaturen	Hook-up:	Pressure Measurement Valves with DVGW - Registration	PDG07
	Condition of Fluid:	Gas	01/02
	Max. Operating Pressure:	PB 100 bar	

2

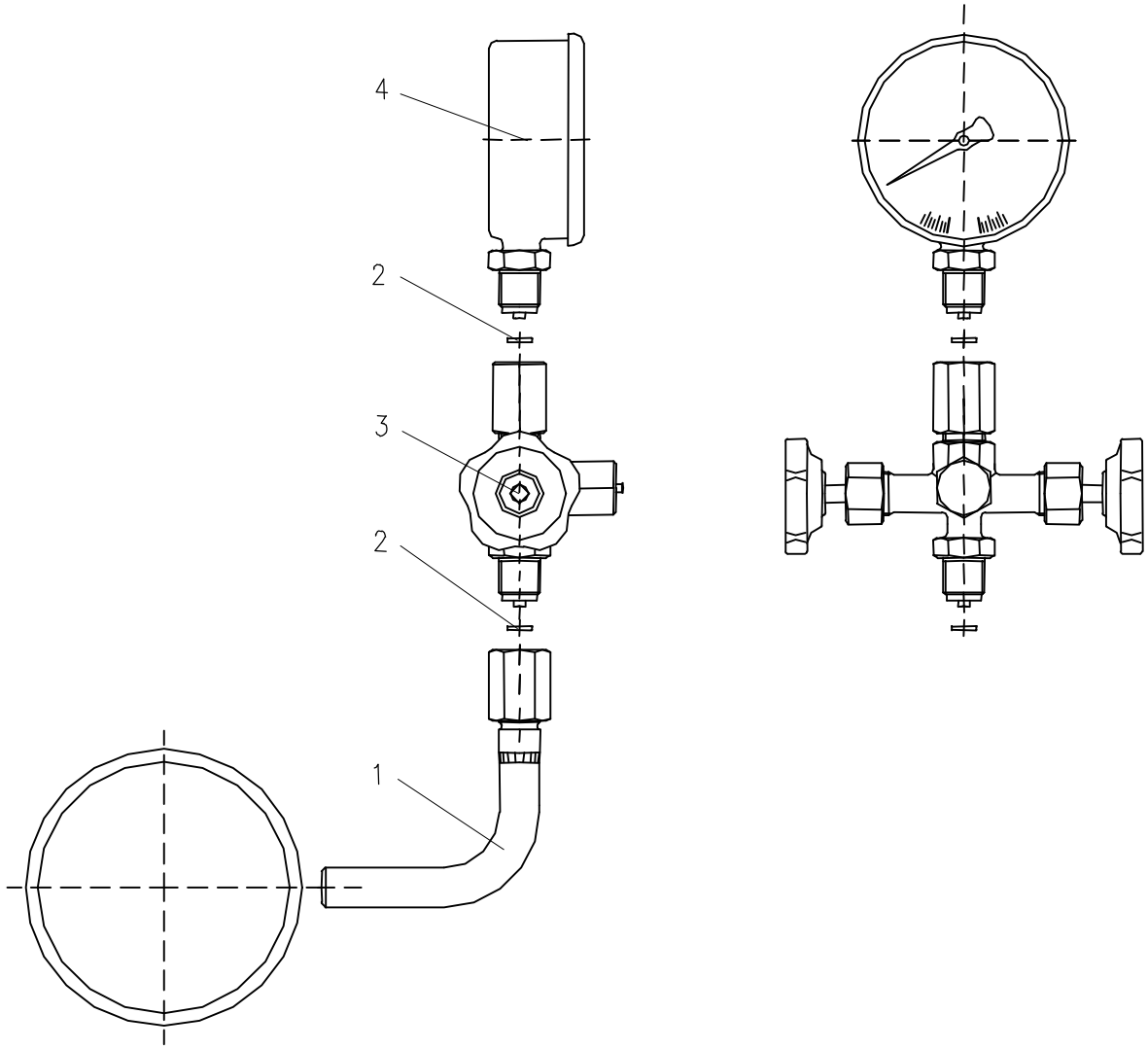

© This drawing is the exclusive property of ARMATURENFABRIK FRANZ SCHNEIDER GmbH & Co. KG. Without their consent it may not be reproduced or given to third parties.

* different material

Pos.	Qty.	Designation	Part no.			Remark
			Brass	Steel	Stainless steel	
1	1	Elbow 90°	S006.17.100.02/St*	S006.17.100.02	S006.17.200.02	
2	2	Sealing washer DIN EN 837-1 *alternative* with O-ring sealing	S006.03.003/Cu* S006.03.080.03	S006.03.003/Cu* *alternative* S006.03.004/Fe* S006.03.180.03	S006.03.007 S006.03.280.03	
3	1	Pressure gauge valve sim. DIN 16 272 form A, with test connection male / female G 1/2 with DVGW - registration	S004.80.000	S004.80.100	S004.80.200	
4	1	Instrument				

SCHNEIDER Armaturen	Hook-up: **Pressure Measurement** Condition of Fluid: **Gas** Max. Operating Pressure: **PB 400 bar**	PDG08 01/02

2

© This drawing is the exclusive property of ARMATURENFABRIK FRANZ SCHNEIDER GmbH & Co. KG. Without their consent it may not be reproduced or given to third parties.

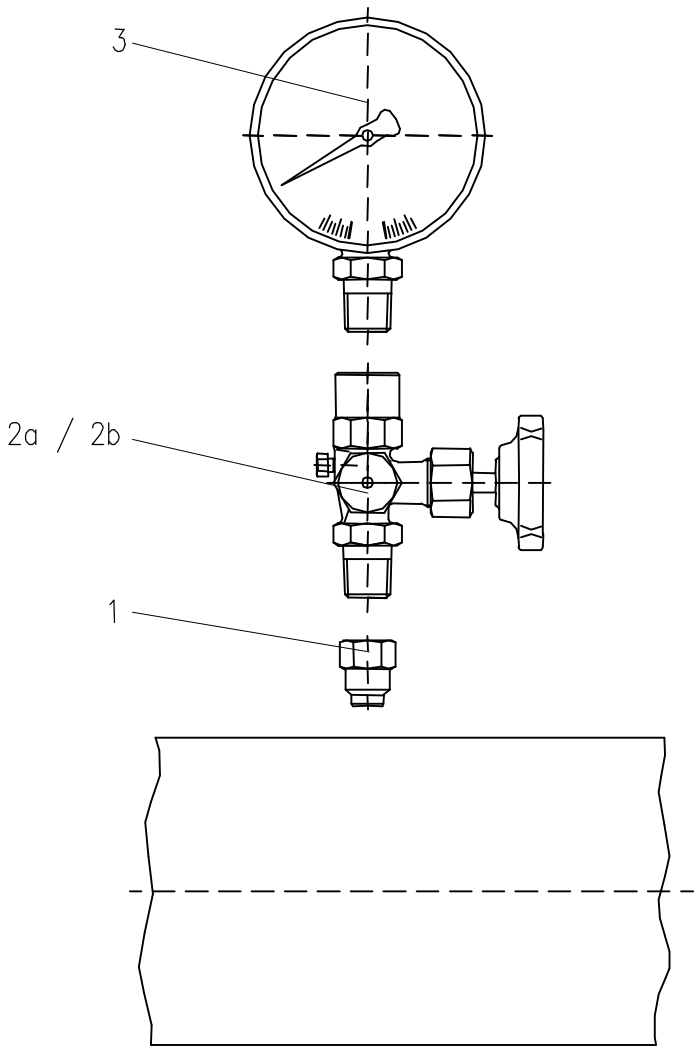

Pos.	Qty.	Designation	Part no.		Remark
			Steel	Stainless steel	
1	1	Pressure tap outlet: female 1/2-14 NPT	S006.07.104.02	S006.07.204.02	
2a	1	Pressure gauge valve sim. DIN 16 270 form A, without test connection male / female 1/2-14 NPT	S004.16.183	S004.16.283	
2b	1	Pressure gauge valve sim. DIN 16 271 form A, with test connection M 20 x 1,5 male / female 1/2-14 NPT	S004.17.135.02	S004.17.235.02	
3	1	Instrument			

SCHNEIDER Armaturen	**Hook-up:** **Pressure Measurement** **Condition of Fluid:** **Gas** **Max. Operating Pressure:** **150 to 2.500 lbs**	PDG09 01/02

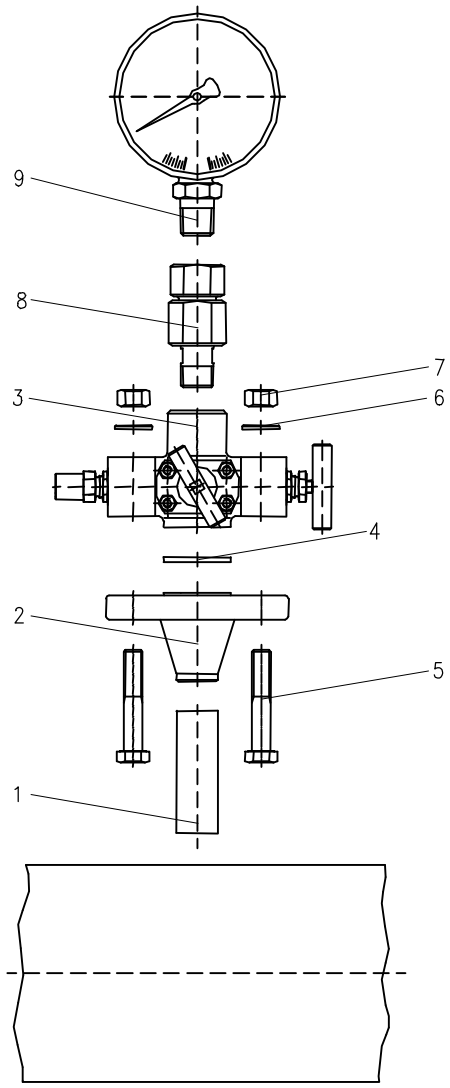

Pos.	Qty.	Designation	Part no. Stainless steel	Remark
1	1	Pressure tap		
2	1	Welding neck flange acc. to ANSI B 16.5		
3	1	Process Monoflange sizes: 1/2" to 2" nominal bore pressure rating: 150 to 2.500 lbs acc. to ANSI B 16.5 OS&Y primary isolation valve outlet: female 1/2-14 NPT (e. g.) Model: Block Block and bleed Double block and bleed	 S60... S61... S62...	
4	1	Sealing		
5		Hexagon head cap screw		
6		Washer		
7		Hexagon nut		
8	1	Swivel gauge adaptor male / female 1/2-14 NPT	S007.45.206.15	
9	1	Instrument		

© This drawing is the exclusive property of ARMATURENFABRIK FRANZ SCHNEIDER GmbH & Co. KG. Without their consent it may not be reproduced or given to third parties.

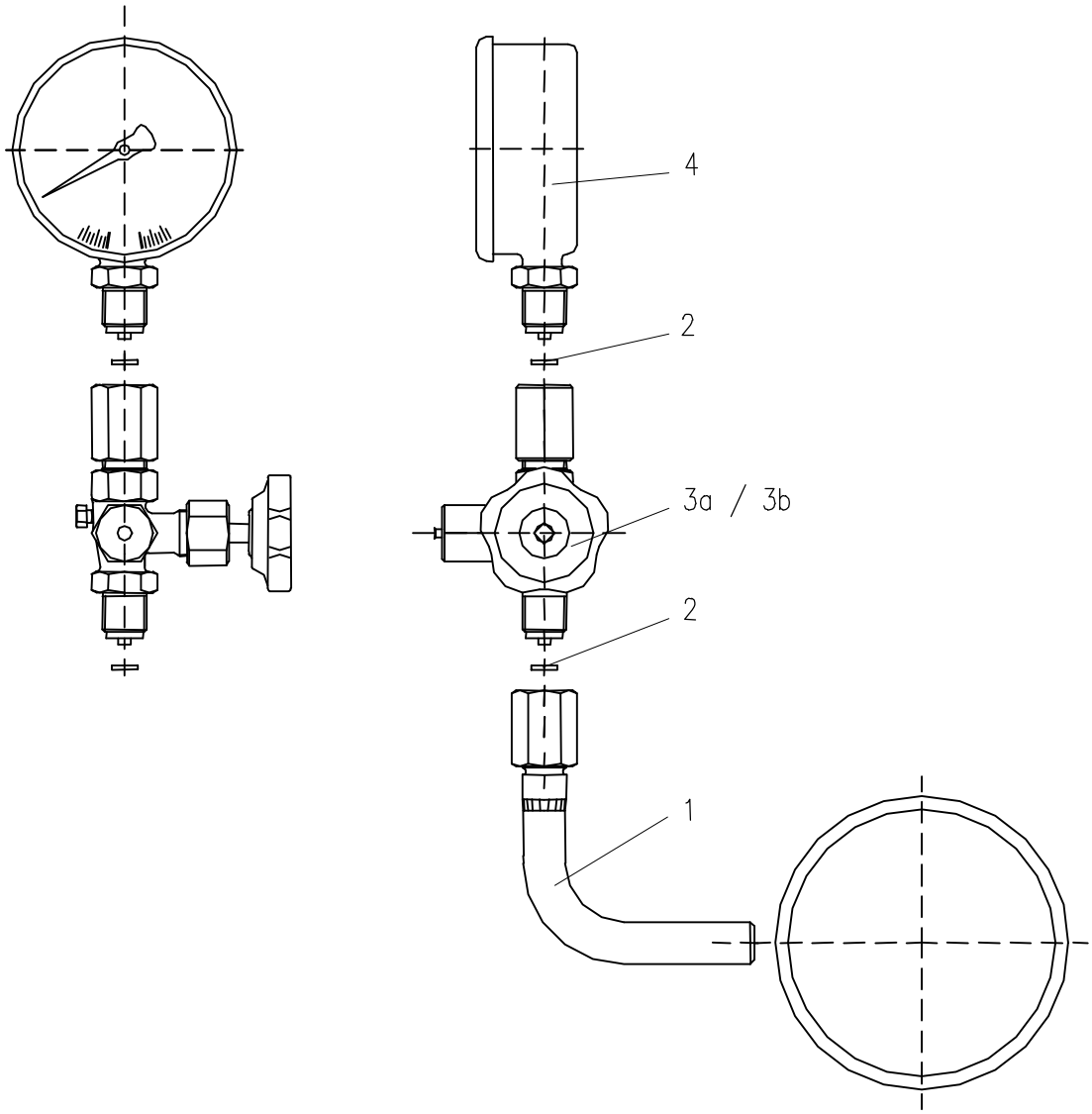

* different material

Pos.	Qty.	Designation	Part no. Brass	Part no. Steel	Part no. Stainless steel	Remark
1	1	Elbow 90°	S006.17.100.02/St*	S006.17.100.02	S006.17.200.02	
2	2	Sealing washer DIN EN 837-1	S006.03.003/Cu*	S006.03.003/Cu* *alternative* S006.03.004/Fe*	S006.03.007	
3a	1	Pressure gauge valve DIN 16 270 form A, with test connection male / female G 1/2	S004.16.000	S004.16.100	S004.16.200	
3b	1	Pressure gauge valve DIN 16 271 form A, without test connection male / female G 1/2	S004.17.000	S004.17.100	S004.17.200	
4	1	Instrument				

© This drawing is the exclusive property of ARMATURENFABRIK FRANZ SCHNEIDER GmbH & Co. KG. Without their consent it may not be reproduced or given to third parties.

© This drawing is the exclusive property of ARMATURENFABRIK FRANZ SCHNEIDER GmbH & Co. KG. Without their consent it may not be reproduced or given to third parties.

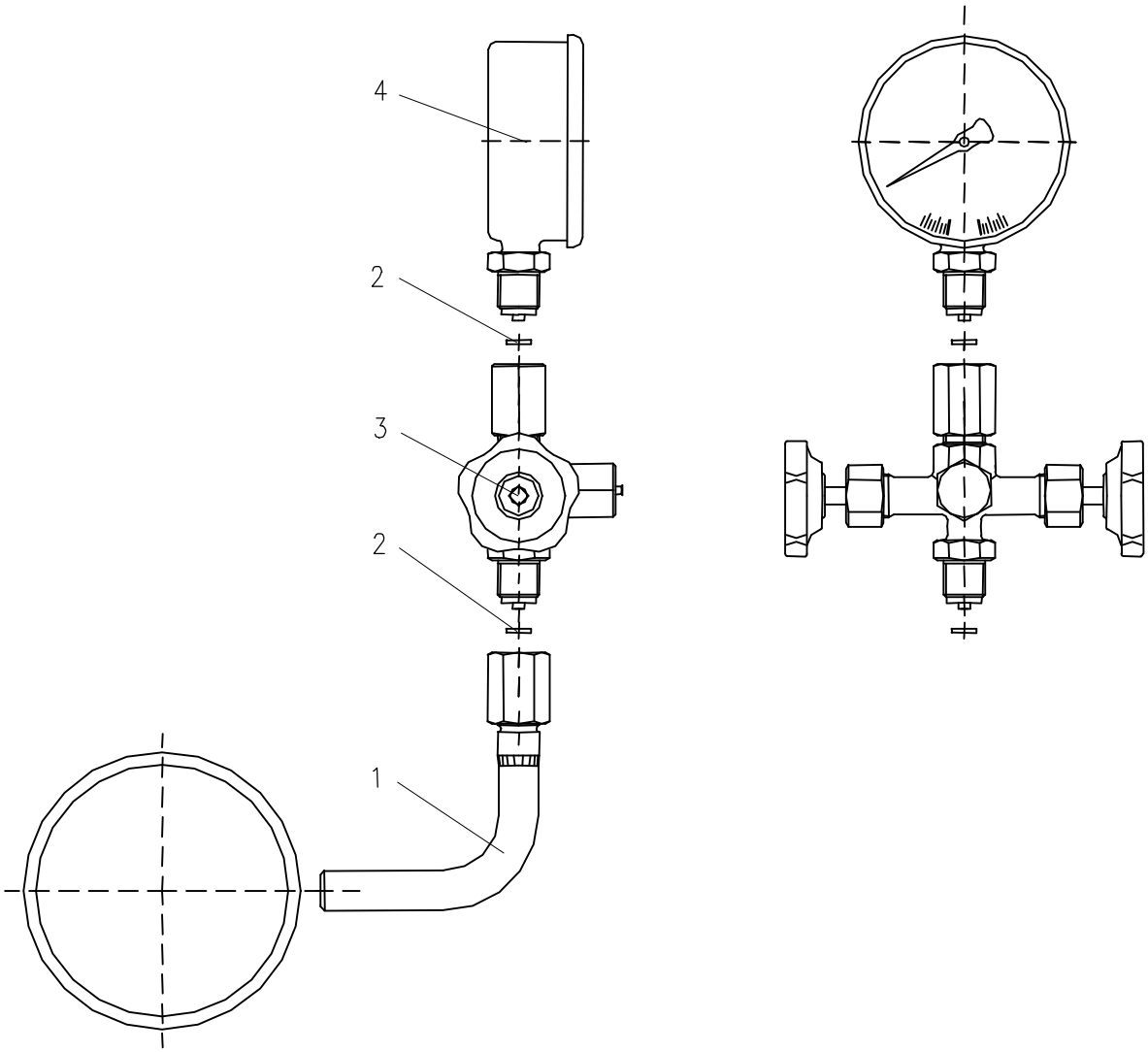

* different material

Pos.	Qty.	Designation	Part no.			Remark
			Brass	Steel	Stainless steel	
1	1	Elbow 90°	S006.17.100.02/St*	S006.17.100.02	S006.17.200.02	
2	2	Sealing washer DIN EN 837-1	S006.03.003/Cu*	S006.03.003/Cu* *alternative* S006.03.004/Fe*	S006.03.007	
3	1	Pressure gauge valve DIN 16 272 form A, with test connection male / female G 1/2	S004.60.000	S004.60.100	S004.60.200	
4	1	Instrument				

© This drawing is the exclusive property of ARMATURENFABRIK FRANZ SCHNEIDER GmbH & Co. KG. Without their consent it may not be reproduced or given to third parties.

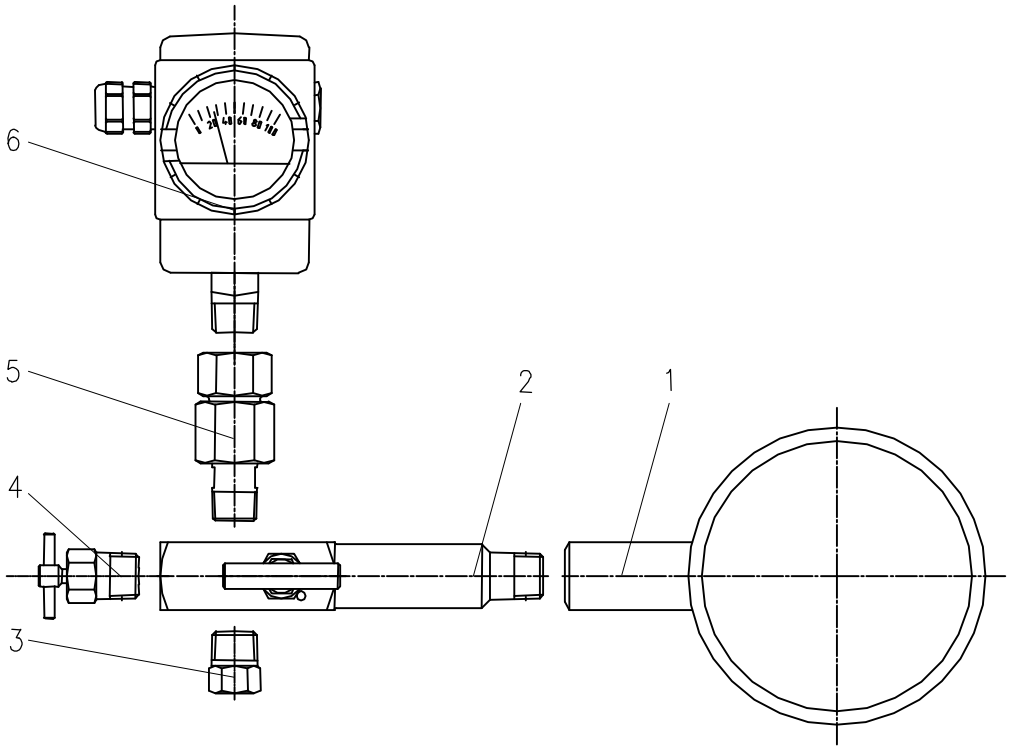

Pos.	Qty.	Designation	Part no. Stainless steel	Remark
1	1	Pressure tap		
2	1	Multiport valve PN 420 with extended body male / female 1/2-14 NPT	N354.17.427.02	
3	1	Screw plug 1/2-14 NPT	S006.14.441.03	
4	1	Vent valve 1/2-14 NPT	S312.09.405.14	
5	1	Swivel gauge adaptor male / female 1/2-14 NPT	S007.45.206.15	
6	1	Instrument		

© This drawing is the exclusive property of ARMATURENFABRIK FRANZ SCHNEIDER GmbH & Co. KG. Without their consent it may not be reproduced or given to third parties.

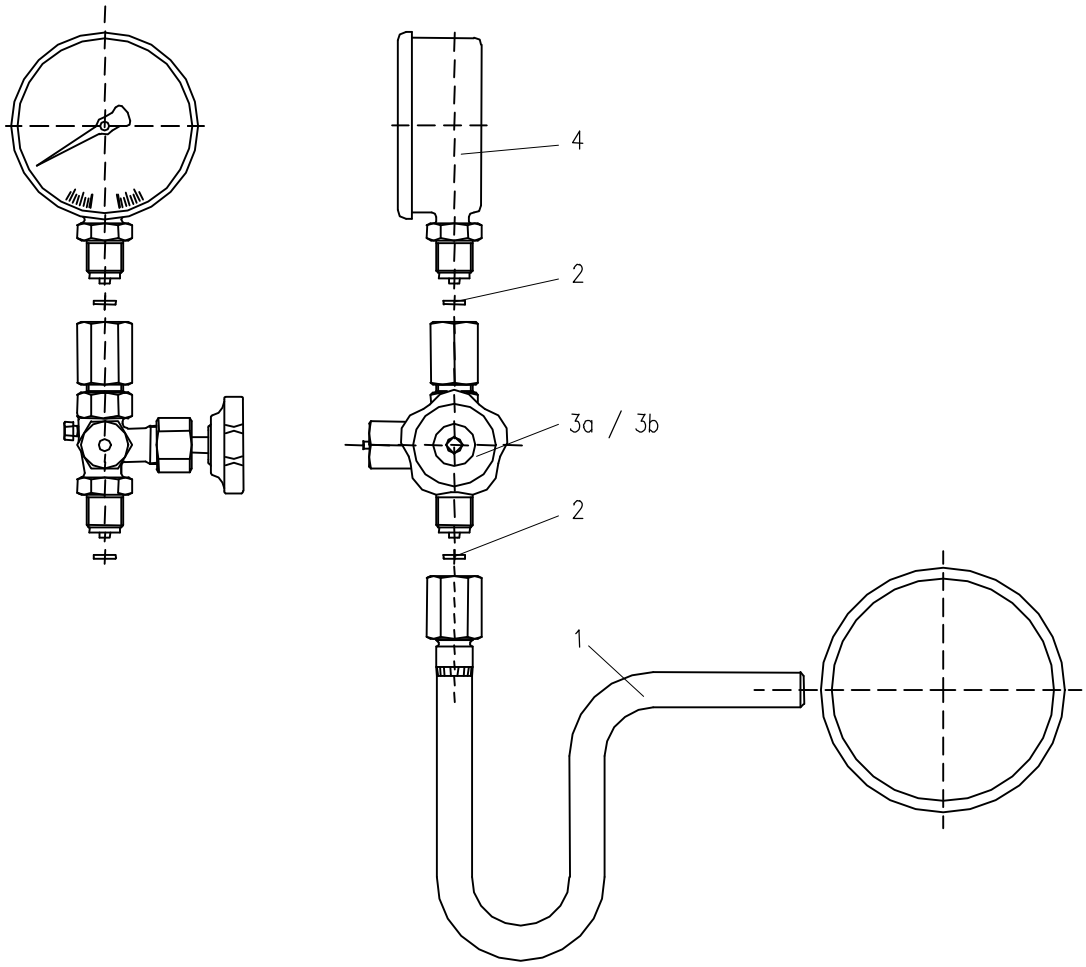

* different material

Pos.	Qty.	Designation	Part no. Steel	Part no. Stainless steel	Remark
1	1	Water syphon	S006.07.110.05	S006.07.210.05	
2	2	Sealing washer DIN EN 837-1	S006.03.003/Cu* *alternative* S006.03.004/Fe*	S006.03.007	
3a	1	Pressure gauge valve DIN 16 270 form A, without test connection male / female G 1/2	S004.16.100	S004.16.200	
3b	1	Pressure gauge valve DIN 16 271 form A, with test connection male / female G 1/2	S004.17.100	S004.17.200	
4	1	Instrument			

© This drawing is the exclusive property of ARMATURENFABRIK FRANZ SCHNEIDER GmbH & Co. KG. Without their consent it may not be reproduced or given to third parties.

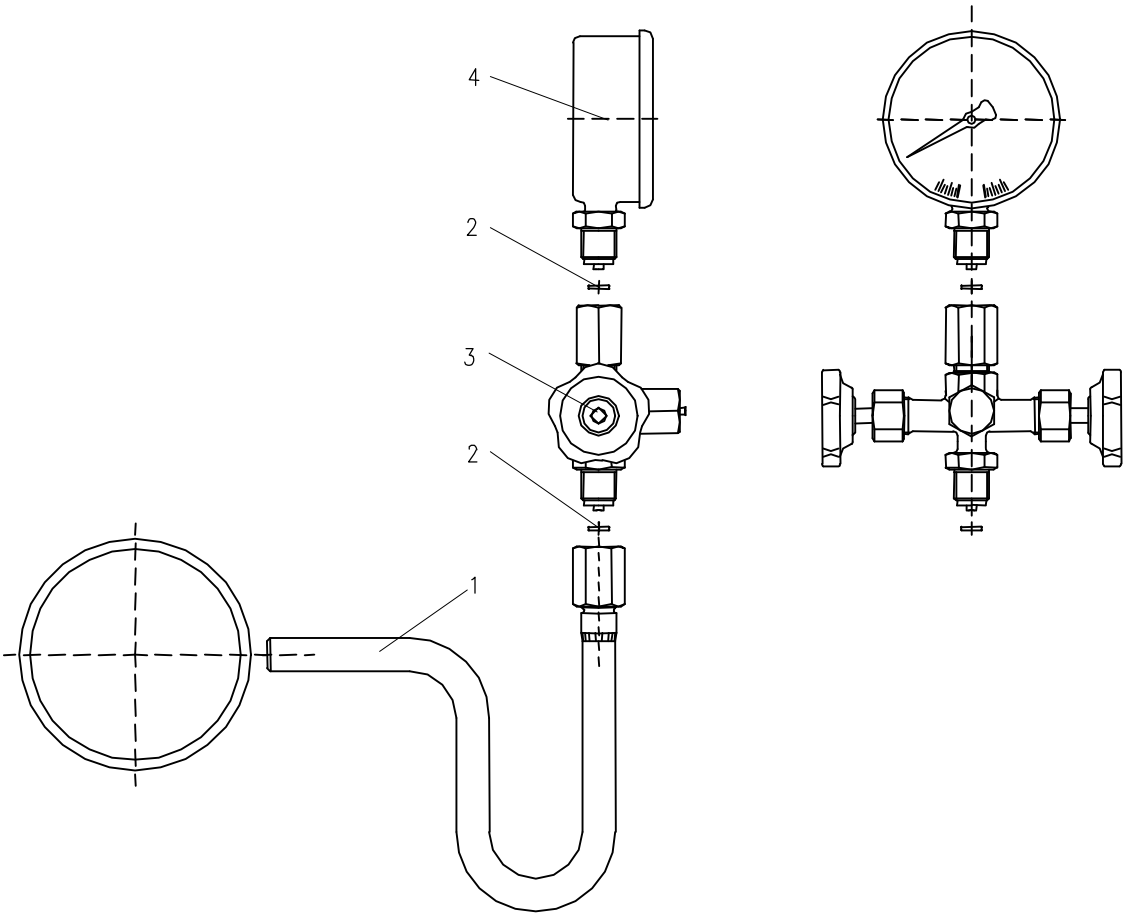

* different material

Pos.	Qty.	Designation	Part no.		Remark
			Steel	Stainless steel	
1	1	Water syphon	S006.07.110.05	S006.07.210.05	
2	2	Sealing washer DIN EN 837-1	S006.03.003/Cu* *alternative* S006.03.004/Fe*	S006.03.007	
3	1	Pressure gauge valve DIN 16 272 form A, with test connection male / female G 1/2	S004.60.100	S004.60.200	
4	1	Instrument			

© This drawing is the exclusive property of ARMATURENFABRIK FRANZ SCHNEIDER GmbH & Co. KG. Without their consent it may not be reproduced or given to third parties.

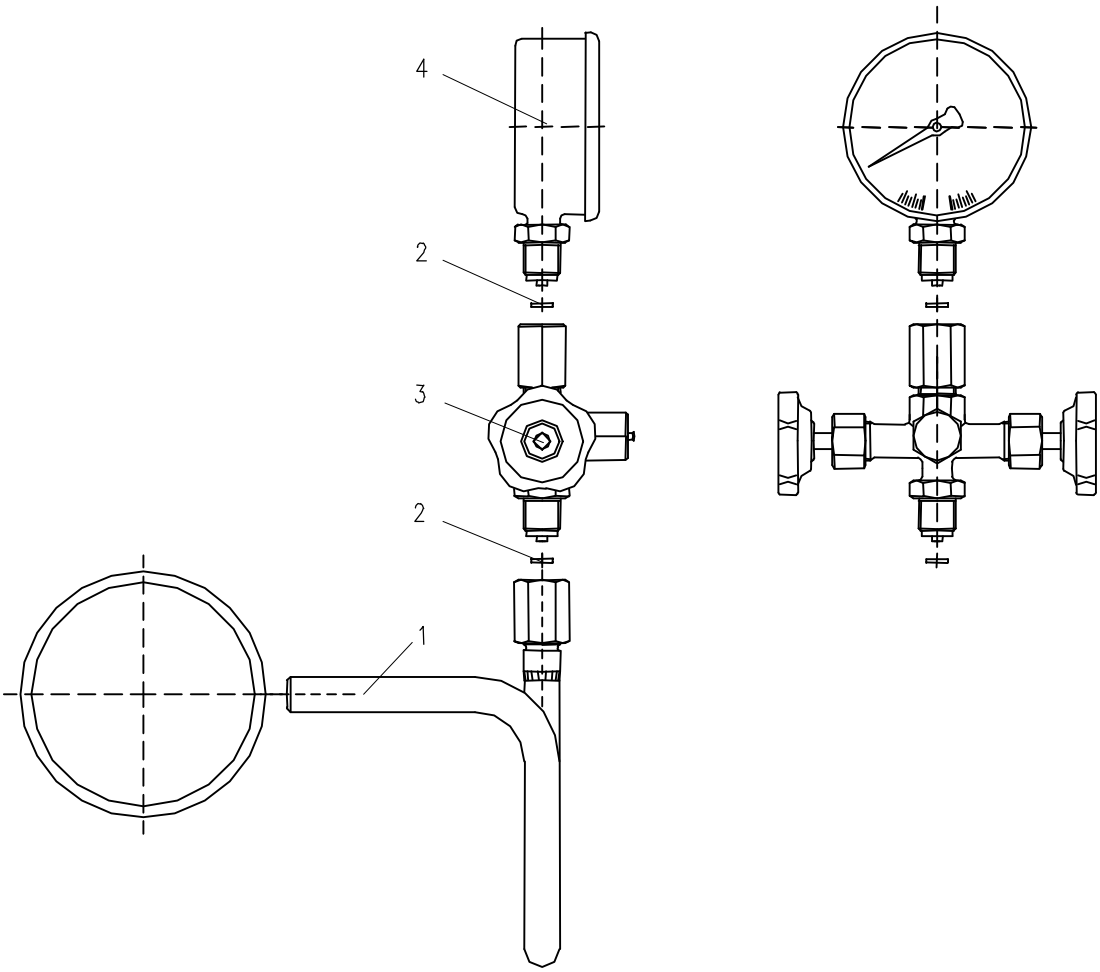

* different material

Pos.	Qty.	Designation	Part no.		Remark
			Steel	Stainless steel	
1	1	Water syphon DIN 16 282 form B	S006.07.110	S006.07.210	
2	2	Sealing washer DIN EN 837-1	S006.03.003/Cu* *alternative* S006.03.004/Fe*	S006.03.007	
3	1	Pressure gauge valve DIN 16 272 form A, with test connection male / female G 1/2	S004.60.100	S004.60.200	
4	1	Instrument			

© This drawing is the exclusive property of ARMATURENFABRIK FRANZ SCHNEIDER GmbH & Co. KG. Without their consent it may not be reproduced or given to third parties.

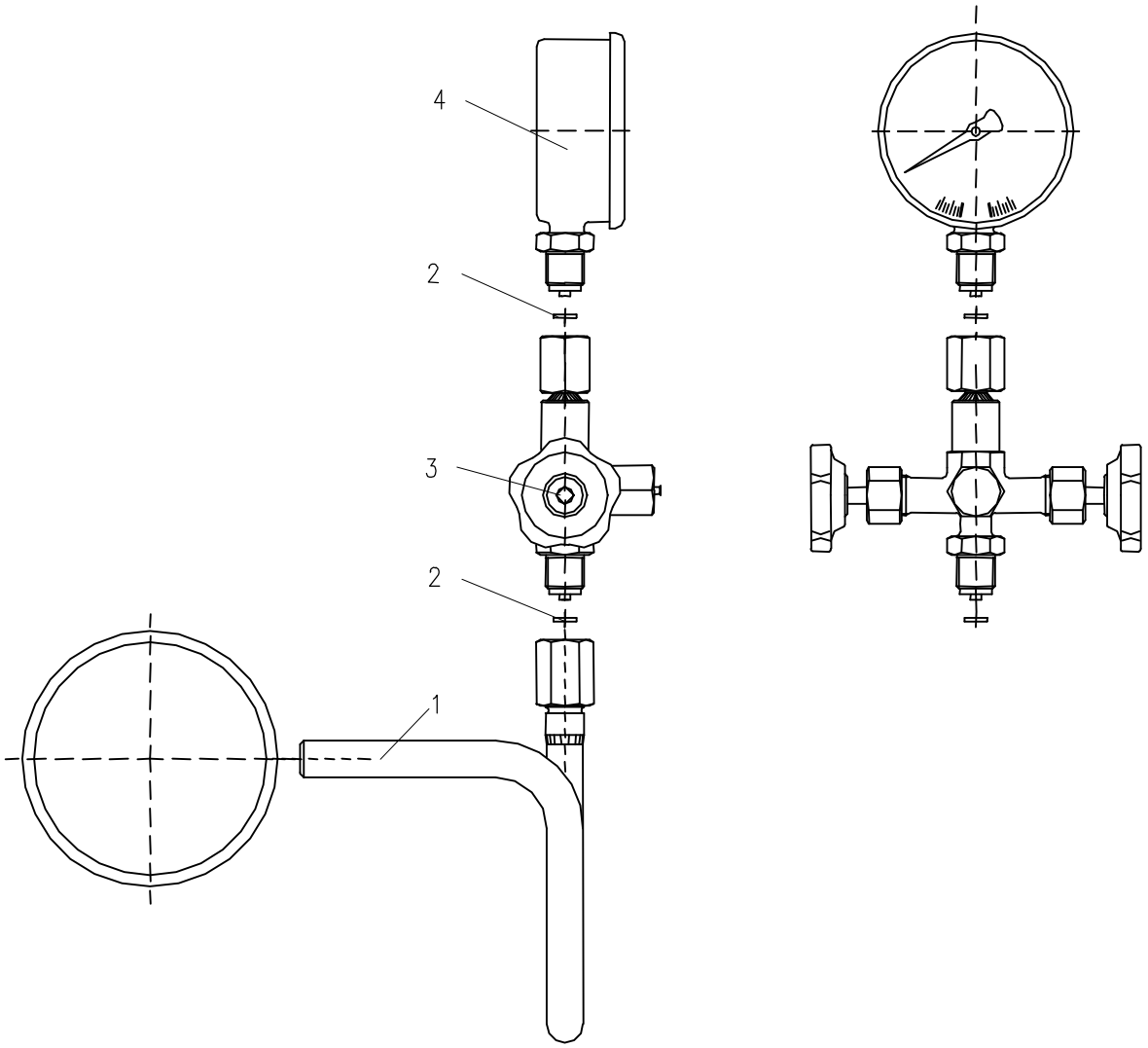

* different material

Pos.	Qty.	Designation	Part no. Steel	Part no. Stainless steel	Remark
1	1	Water syphon DIN 16 282 form B	S006.07.110	S006.07.210	
2	2	Sealing washer DIN EN 837-1	S006.03.003/Cu* *alternative* S006.03.004/Fe*	S006.03.007	
3	1	Pressure gauge valve DIN 16 272 form B, with test connection male / turning nut G 1/2	S004.60.120	S004.60.220	
4	1	Instrument			

© This drawing is the exclusive property of ARMATURENFABRIK FRANZ SCHNEIDER GmbH & Co. KG. Without their consent it may not be reproduced or given to third parties.

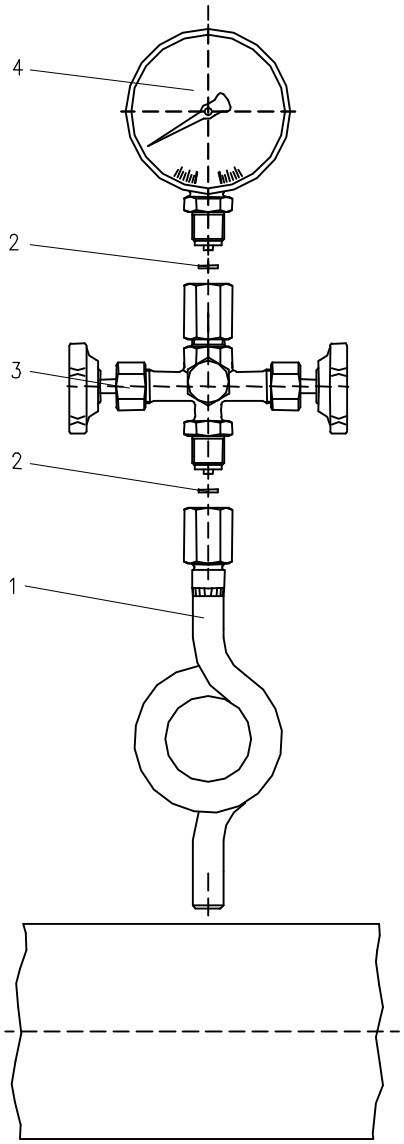

* different material

Pos.	Qty.	Designation	Part no.		Remark
			Steel	Stainless steel	
1	1	Water syphon DIN 16 282 form D	S006.08.110	S006.08.210	
2	2	Sealing washer DIN EN 837-1	S006.03.003/Cu* *alternative* S006.03.004/Fe*	S006.03.007	
3	1	Pressure gauge valve DIN 16 272 form A, with test connection male / female G 1/2	S004.60.100	S004.60.200	
4	1	Instrument			

© This drawing is the exclusive property of ARMATURENFABRIK FRANZ SCHNEIDER GmbH & Co. KG. Without their consent it may not be reproduced or given to third parties.

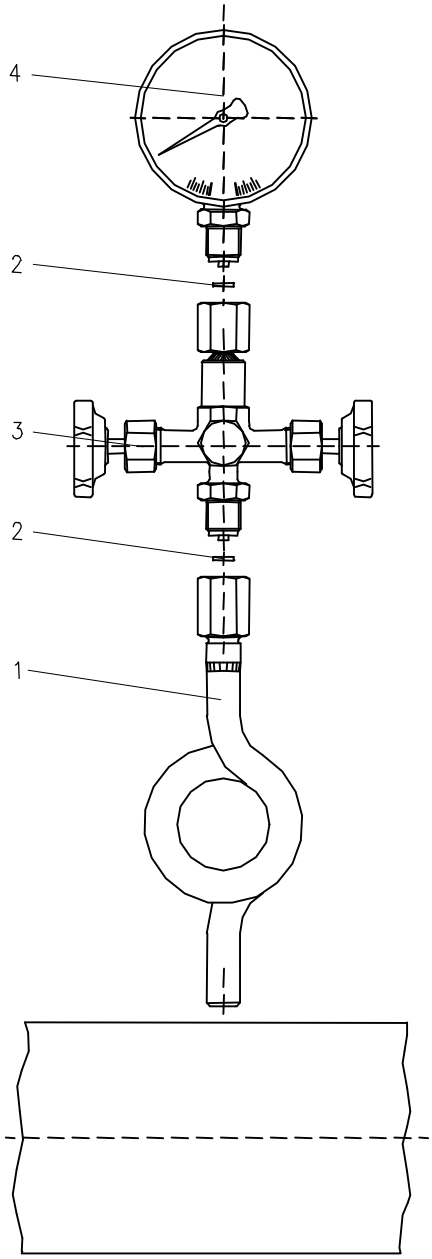

* different material

Pos.	Qty.	Designation	Part no.		Remark
			Steel	Stainless steel	
1	1	Water syphon DIN 16 282 form D	S006.08.110	S006.08.210	
2	2	Sealing washer DIN EN 837-1	S006.03.003/Cu* *alternative* S006.03.004/Fe*	S006.03.007	
3	1	Pressure gauge valve DIN 16 272 form B, with test connection male / turning nut G 1/2	S004.60.120	S004.60.220	
4	1	Instrument			

SCHNEIDER Armaturen	Hook-up: **Pressure Measurement** Condition of Fluid: **Steam** Max. Operating Pressure: **PB 400 bar**	PDS03 01/02

2

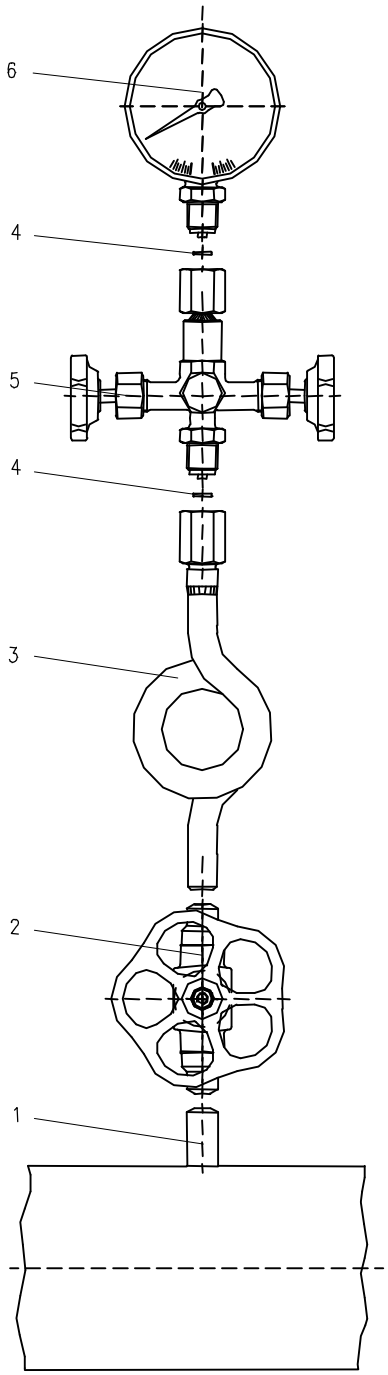

© This drawing is the exclusive property of ARMATURENFABRIK FRANZ SCHNEIDER GmbH & Co. KG. Without their consent it may not be reproduced or given to third parties.

* different material

Pos.	Qty.	Designation	Part no. Steel	Part no. Stainless steel	Remark
1	1	Pressure tap Ø 21,3 x 3,6	S007.56.602.15	S007.56.202.15	
2	1	Primary isolation valve Ø 21,3 x 3,6	S340.11.612.01	S340.11.212.01	
3	1	Water syphon DIN 16 282 form D	S006.08.611.04	S006.08.211.04	
4	2	Sealing washer DIN EN 837-1	S006.03.004/Fe*	S006.03.007	
5	1	Pressure gauge valve DIN 16 272 form B, with test connection male / turning nut G 1/2	S004.60.120	S004.60.220	
6	1	Instrument			

© This drawing is the exclusive property of ARMATURENFABRIK FRANZ SCHNEIDER GmbH & Co. KG. Without their consent it may not be reproduced or given to third parties.

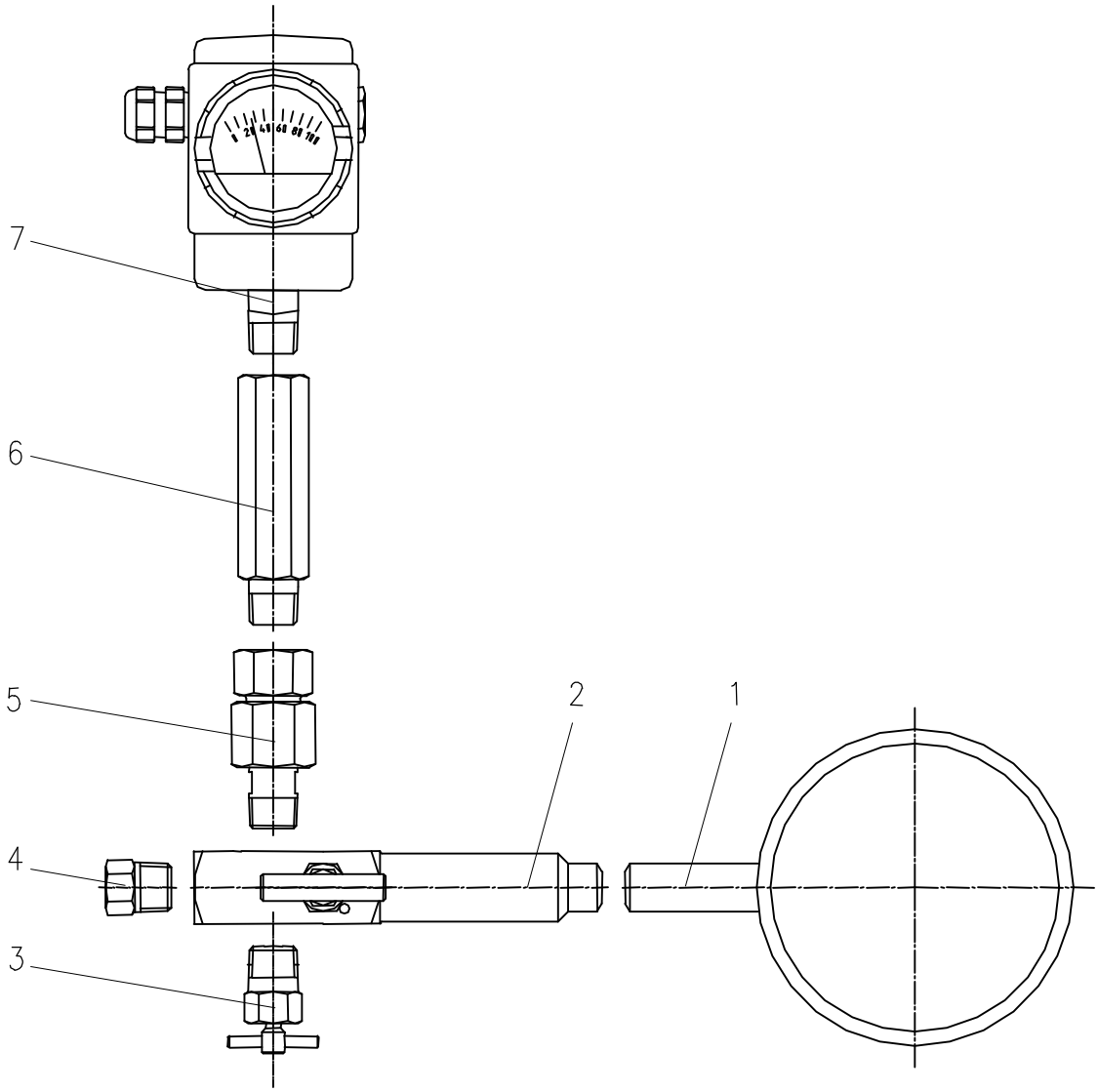

Pos.	Qty.	Designation	Part no. Stainless steel	Remark
1	1	Pressure tap		
2	1	Multiport valve PN 420 with extended body weld end / female 1/2-14 NPT	N354.17.427.0120	
3	1	Vent valve 1/2-14 NPT	S312.09.405.14	
4	1	Screw plug 1/2-14 NPT	S006.14.441.03	
5	1	Swivel gauge adaptor male / female 1/2-14 NPT	S007.45.206.15	
6	1	Gauge syphon	S006.47.203.05	
7	1	Instrument		

Hook-ups
PR

Pressure instruments mounted to racks or in enclosures etc.

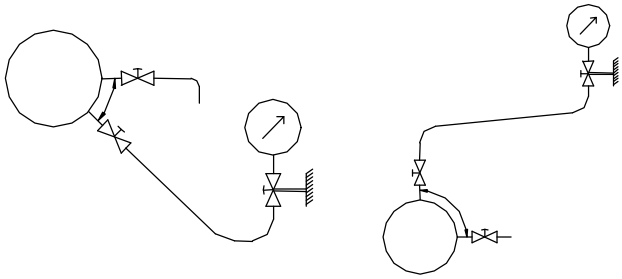

3

SCHNEIDER Armaturen	**Hook-up:** **Pressure Measurement** **Condition of Fluid:** **Steam (e. g. Air / Flue Gas)** **Max. Operating Pressure:** **PB 100 bar**	PRG01 01/02

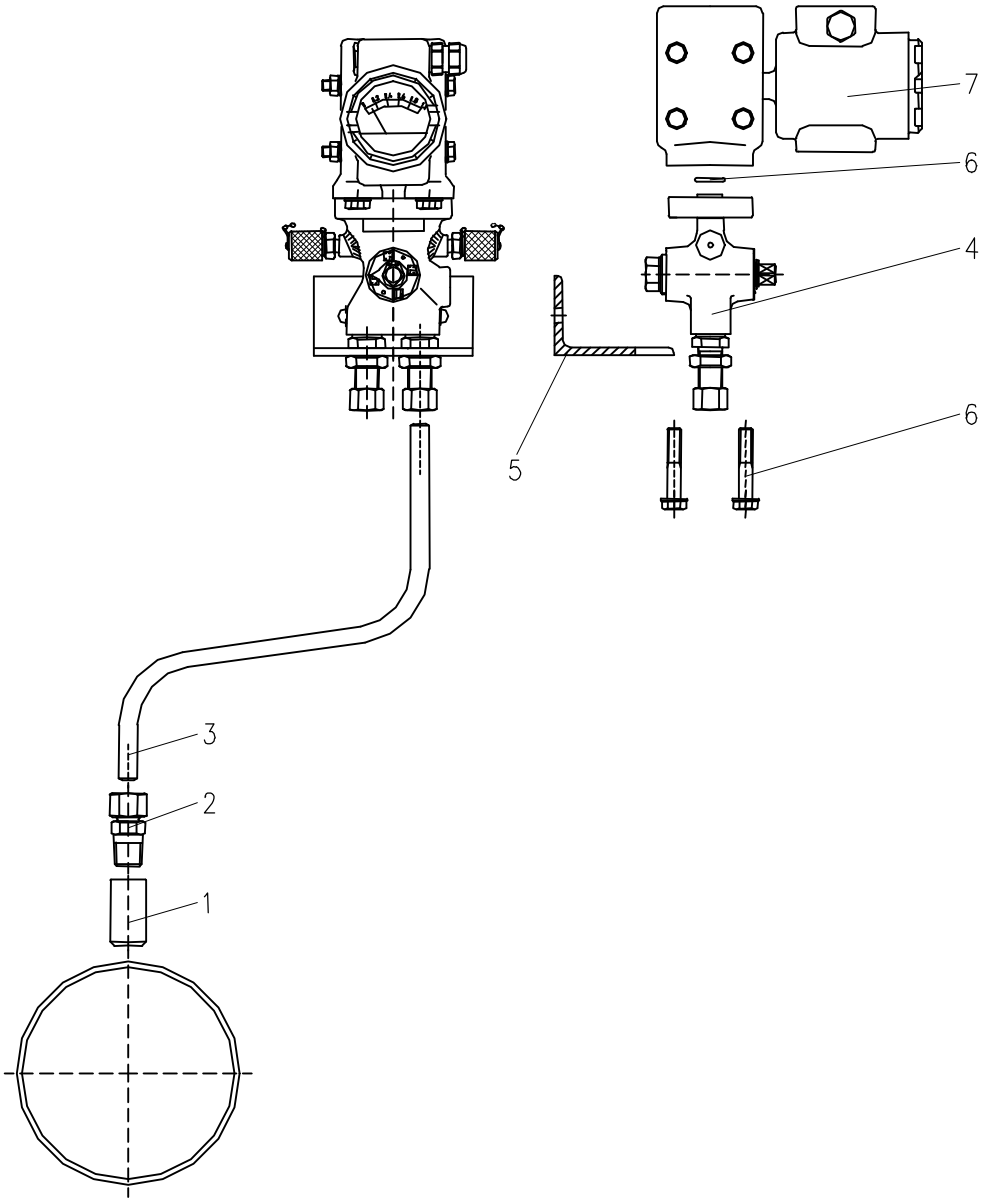

Pos.	Qty.	Designation	Part no.		Remark
			Steel	Stainless steel	
1	1	Pressure tap outlet: female G 3/8			
2	1	Male connector G 3/8 / tube fitting 12S	510055	520102	
3	1	Impulse line Ø 12			
4	1	Multi-way cock PN 100 with test connection (quick coupling)	S345.06.102.26	S345.06.202.27	
5	1	Mounting bracket	S006.42.103.04	S006.42.203.04	
6	1	Accessory kit consisting of: screws and seal rings	catalogue page 8.00 - see appendix A1		
7	1	Instrument			

© This drawing is the exclusive property of ARMATURENFABRIK FRANZ SCHNEIDER GmbH & Co. KG. Without their consent it may not be reproduced or given to third parties.

SCHNEIDER Armaturen	**Hook-up:** **Pressure Measurement** **Condition of Fluid:** **Gas** **Max. Operating Pressure:** **PB 400 bar**	PRG02 01/02

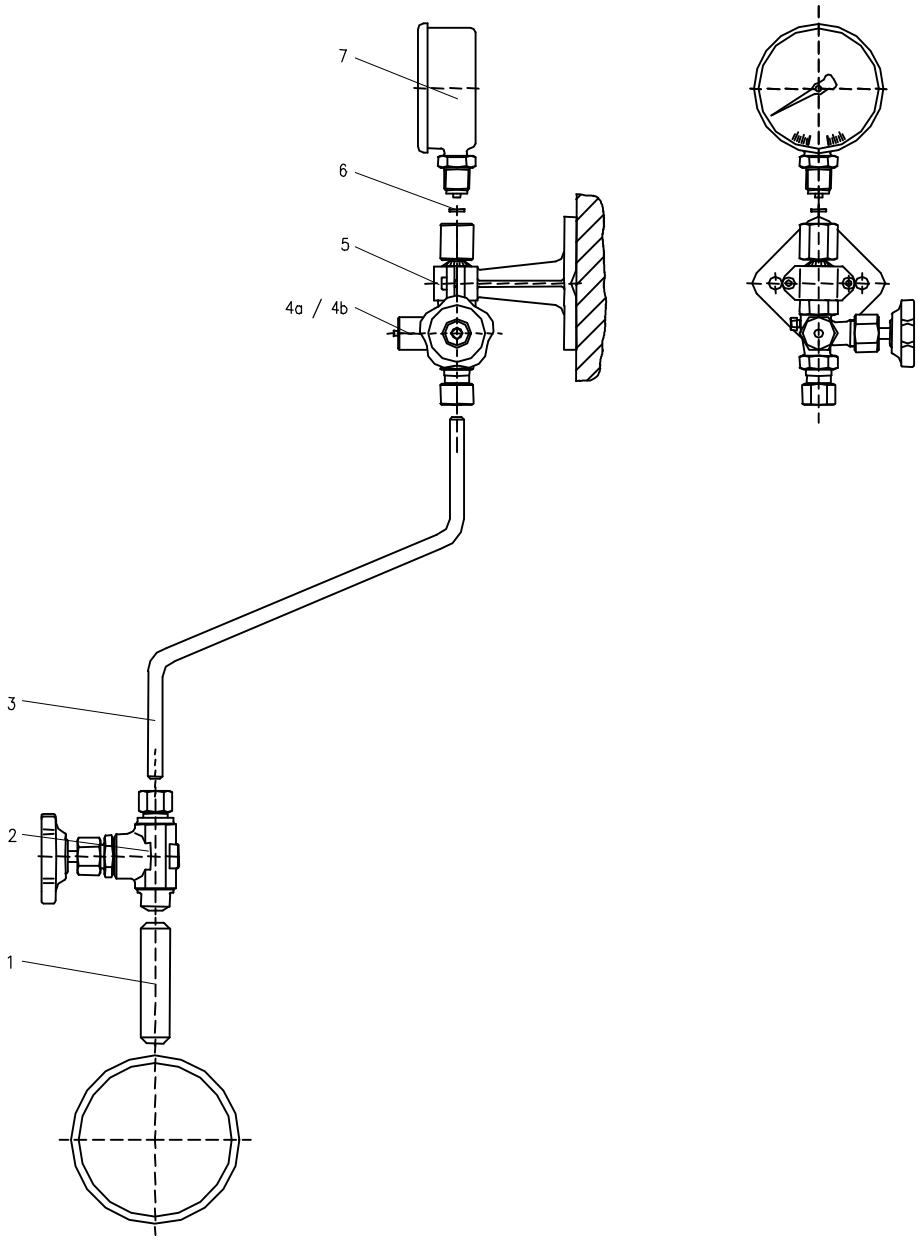

* different material

Pos.	Qty.	Designation	Part no. Steel	Part no. Stainless steel	Remark
1	1	Pressure tap outlet: weld end Ø 21,3			
2	1	Primary isolation valve PN 400 DN 8 Ø 21,3 x Ø 12,2 / tube fitting 12S	S350.05.130	S350.05.230	
3	1	Impulse line Ø 12			
4a	1	Pressure gauge valve DIN 16 270 form B, without test connection tube fitting 12S / turning nut G 1/2	S004.16.120.13	S004.16.220.13	
4b	1	Pressure gauge valve DIN 16 271 form B, with test connection tube fitting 12S / turning nut G 1/2	S004.17.120.13	S004.17.220.13	
5	1	Pressure gauge support DIN 16 281-A *alternative* Pressure gauge support DIN 16 281-H	S006.12.110 S006.12.115/Alu*	S006.12.110 S006.12.115/Alu*	
6	1	Sealing washer DIN EN 837-1	S006.03.004/Fe*	S006.03.007	
7	1	Instrument			

© This drawing is the exclusive property of ARMATURENFABRIK FRANZ SCHNEIDER GmbH & Co. KG. Without their consent it may not be reproduced or given to third parties.

SCHNEIDER Armaturen	**Hook-up:**	**Pressure Measurement** **Valves with DVGW - Registration**	PRG03
	Condition of Fluid:	**Gas**	
	Max. Operating Pressure:	**PB 100 bar**	01/02

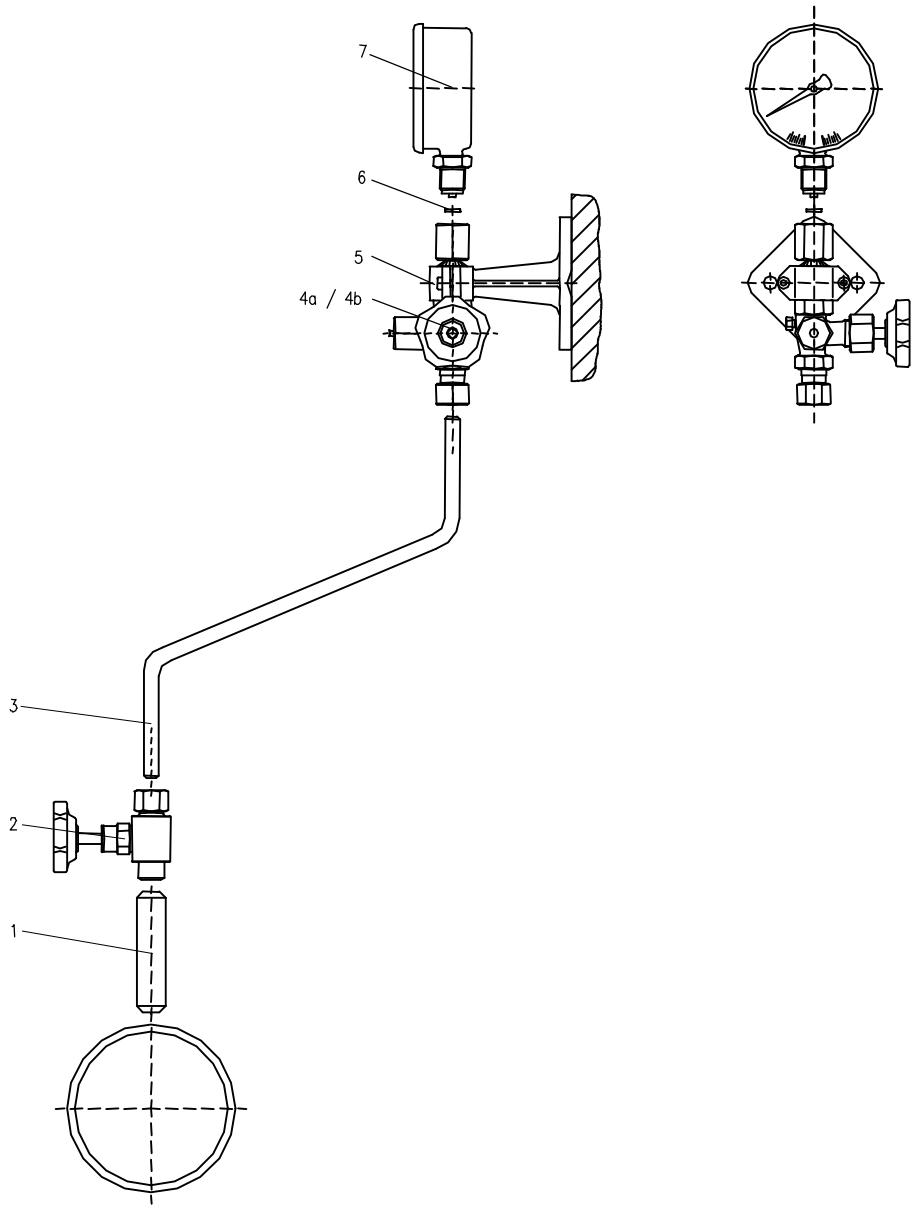

* different material

Pos.	Qty.	Designation	Part no. Steel	Part no. Stainless steel	Remark
1	1	Pressure tap outlet: weld end Ø 21,3			
2	1	Primary isolation valve PN 100 DN 5 Ø 21,3 x 3,2 / tube fitting 12S DVGW - registration in preparation	N334.05.130.08	N334.05.230.08	
3	1	Impulse line Ø 12			
4a	1	Pressure gauge valve sim. DIN 16 270 form B, without test connection tube fitting 12S / turning nut G 1/2 with DVGW - registration	S004.26.120.13	S004.26.220.13	
4b	1	Pressure gauge valve sim. DIN 16 271 form B, with test connection tube fitting 12S / turning nut G 1/2 with DVGW - registration	S004.27.120.13	S004.27.220.13	
5	1	Pressure gauge support DIN 16 281-A *alternative* Pressure gauge support DIN 16 281-H	S006.12.110 S006.12.115/Alu*	S006.12.110 S006.12.115/Alu*	
6	1	Sealing washer DIN EN 837-1 *alternative* with O-ring sealing	S006.03.004/Fe* S006.03.180.03	S006.03.007 S006.03.280.03	
7	1	Instrument			

© This drawing is the exclusive property of ARMATURENFABRIK FRANZ SCHNEIDER GmbH & Co. KG. Without their consent it may not be reproduced or given to third parties.

Hook-up:	**Pressure Measurement**	PRG04
Condition of Fluid:	**Gas**	
Max. Operating Pressure:	**PB 400 bar**	01/02

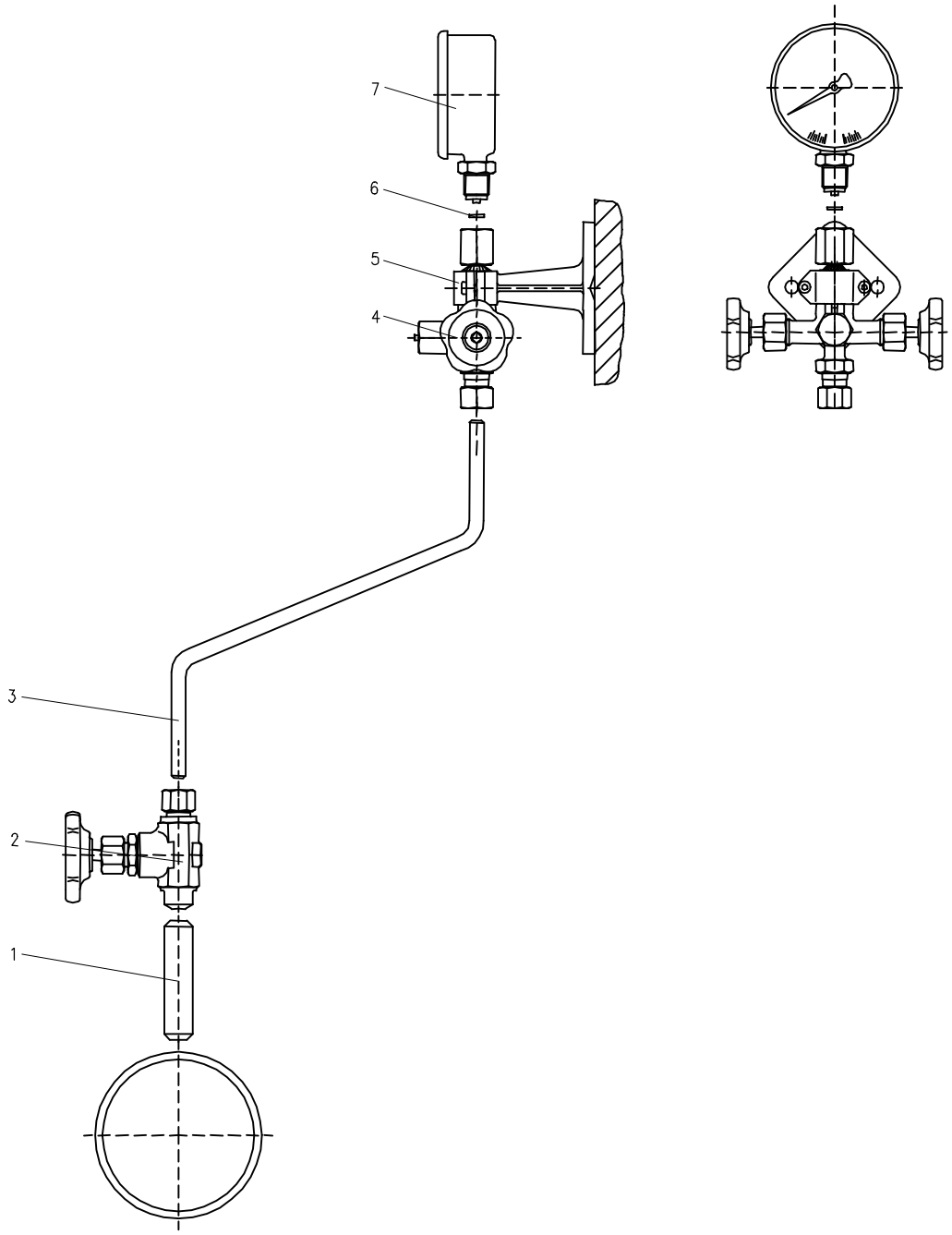

* different material

Pos.	Qty.	Designation	Part no. Steel	Part no. Stainless steel	Remark
1	1	Pressure tap outlet: weld end Ø 21,3			
2	1	Primary isolation valve PN 400 DN 8 Ø 21,3 x Ø 12,2 / tube fitting 12S	S350.05.130	S350.05.230	
3	1	Impulse line Ø 12			
4	1	Pressure gauge valve DIN 16 272 form B, with test connection tube fitting 12S / turning nut G 1/2	S004.60.120.13	S004.60.220.13	
5	1	Pressure gauge support DIN 16 281-A *alternative* Pressure gauge support DIN 16 281-H	S006.12.110 S006.12.115/Alu*	S006.12.110 S006.12.115/Alu*	
6	1	Sealing washer DIN EN 837-1	S006.03.004/Fe*	S006.03.007	
7	1	Instrument			

© This drawing is the exclusive property of ARMATURENFABRIK FRANZ SCHNEIDER GmbH & Co. KG. Without their consent it may not be reproduced or given to third parties.

Armaturenfabrik Franz Schneider GmbH & Co.KG • D-74226 Nordheim • Germany • Tel. 07133/101-0 • Fax 07133/101-180

SCHNEIDER Armaturen	**Hook-up:**	**Pressure Measurement** **Valves with DVGW - Registration**	PRG05
	Condition of Fluid:	**Gas**	
	Max. Operating Pressure:	**PB 100 bar**	01/02

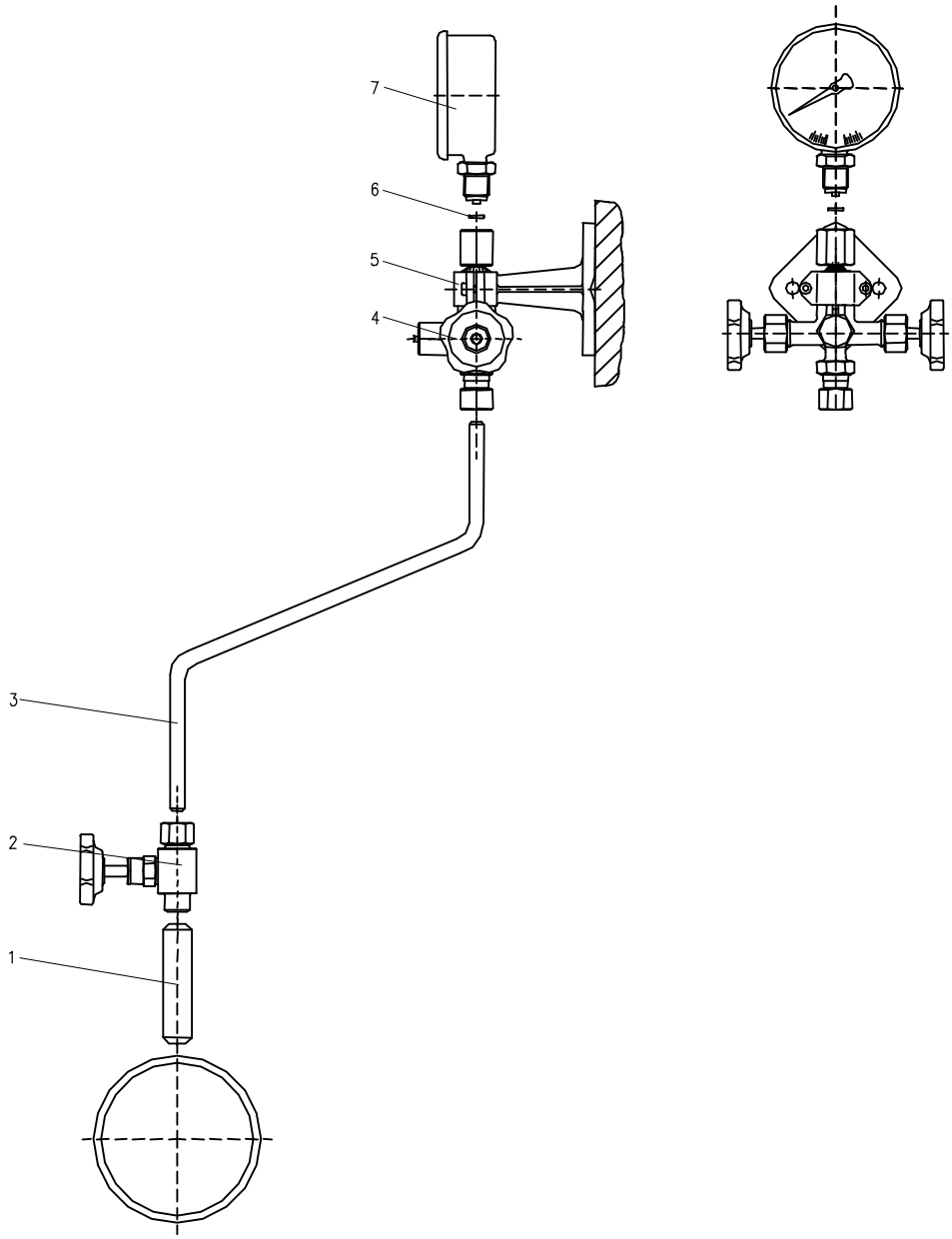

* different material

Pos.	Qty.	Designation	Part no. Steel	Part no. Stainless steel	Remark
1	1	Pressure tap outlet: weld end Ø 21,3			
2	1	Primary isolation valve PN 100 DN 5 Ø 21,3 x 3,2 / tube fitting 12S DVGW - registration in preparation	N334.05.130.08	N334.05.230.08	
3	1	Impulse line Ø 12			
4	1	Pressure gauge valve sim. DIN 16 272 form B, with test connection tube fitting 12S / turning nut G 1/2 with DVGW - registration	S004.80.120.13	S004.80.220.13	
5	1	Pressure gauge support DIN 16 281-A *alternative* Pressure gauge support DIN 16 281-H	S006.12.110 S006.12.115/Alu*	S006.12.110 S006.12.115/Alu*	
6	1	Sealing washer DIN EN 837-1 *alternative* with O-ring sealing	S006.03.004/Fe* S006.03.180.03	S006.03.007 S006.03.280.03	
7	1	Instrument			

© This drawing is the exclusive property of ARMATURENFABRIK FRANZ SCHNEIDER GmbH & Co. KG. Without their consent it may not be reproduced or given to third parties.

SCHNEIDER Armaturen	**Hook-up:**	**Pressure Measurement**	PRG06
	Condition of Fluid:	**Gas**	
	Max. Operating Pressure:	**PB 400 bar**	01/02

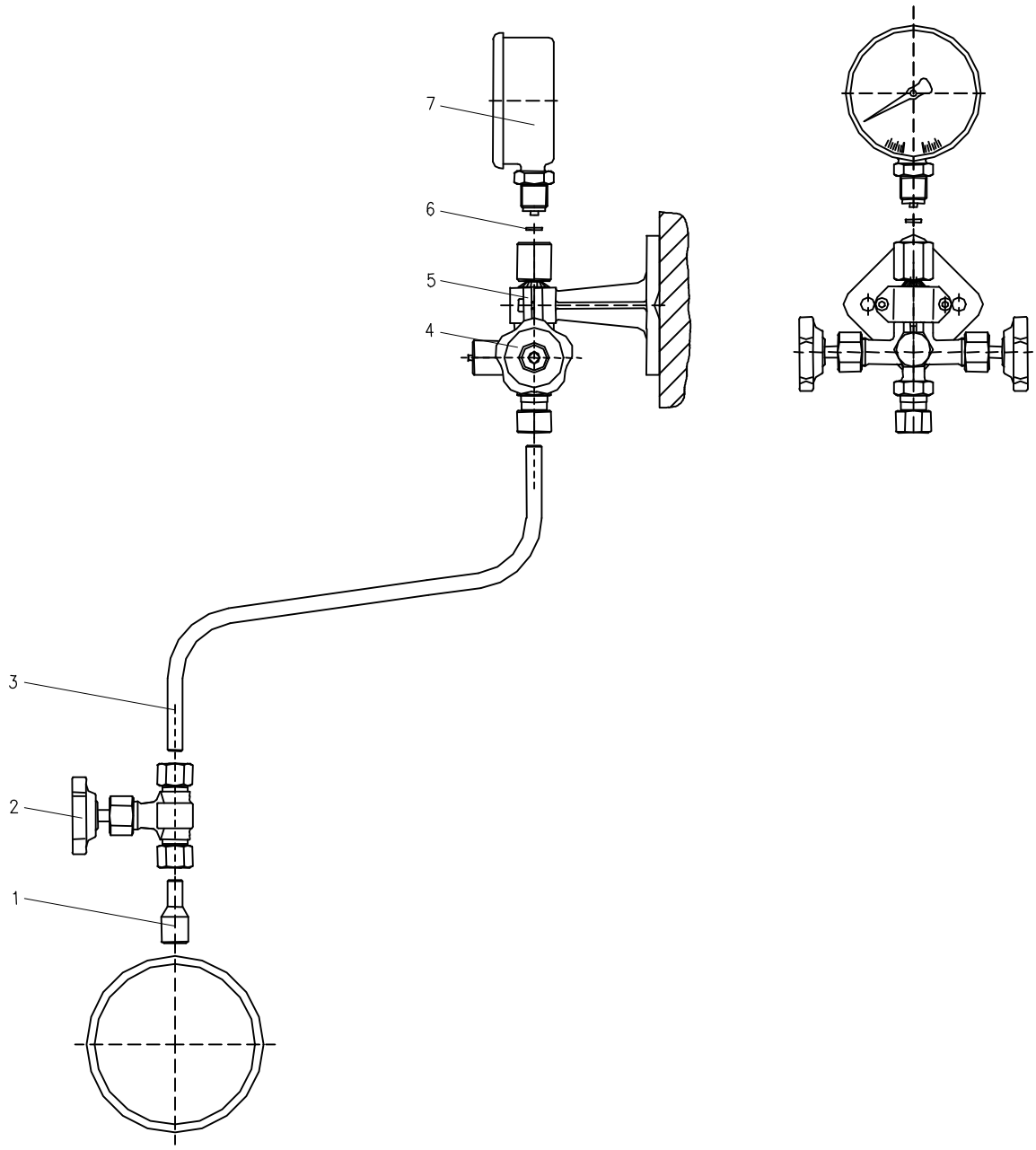

* different material

Pos.	Qty.	Designation	Part no. Steel	Part no. Stainless steel	Remark
1	1	Pressure tap outlet: weld end Ø 12			
2	1	Primary isolation valve PN 400 both sides tube fitting 12S	S338.03.100	S338.03.200	
3	1	Impulse line Ø 12			
4	1	Pressure gauge valve DIN 16 272 form B, with test connection tube fitting 12S / turning nut G 1/2	S004.60.120.13	S004.60.220.13	
5	1	Pressure gauge support DIN 16 281-A *alternative* Pressure gauge support DIN 16 281-H	S006.12.110 S006.12.115/Alu*	S006.12.110 S006.12.115/Alu*	
6	1	Sealing washer DIN EN 837-1	S006.03.004/Fe*	S006.03.007	
7	1	Instrument			

© This drawing is the exclusive property of ARMATURENFABRIK FRANZ SCHNEIDER GmbH & Co. KG. Without their consent it may not be reproduced or given to third parties.

SCHNEIDER Armaturen	**Hook-up:**	**Pressure Measurement** **Valves with DVGW - Registration**	PRG07
	Condition of Fluid:	**Gas**	01/02
	Max. Operating Pressure:	**PB 100 bar**	

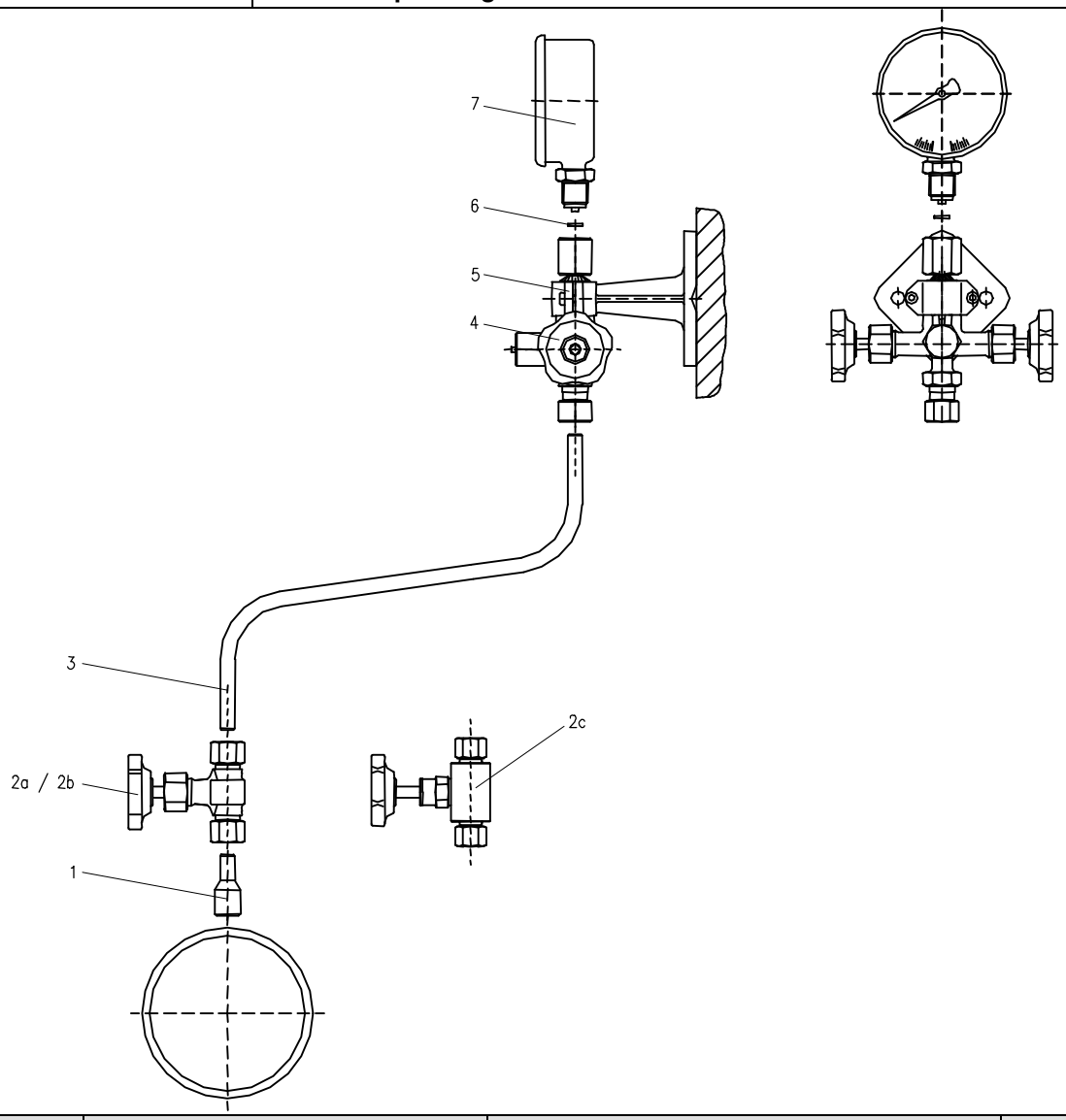

* different material

Pos.	Qty.	Designation	Part no. Steel	Part no. Stainless steel	Remark
1	1	Pressure tap outlet: weld end Ø 12			
2a	1	Primary isolation valve PN 100 both sides tube fitting 12S with DVGW - registration	S338.34.100.02		
2b	1	Primary isolation valve PN 100 both sides tube fitting 12S galvanized steel with DVGW - registration	S338.34.100.0283		
2c	1	Primary isolation valve PN 100 both sides tube fitting 12L DVGW - registration in preparation	N334.01.104	N334.01.204	
3	1	Impulse line Ø 12			
4	1	Pressure gauge valve sim. DIN 16 272 form B, with test connection tube fitting 12S / turning nut G 1/2 with DVGW - registration	S004.80.120.13	S004.80.220.13	
5	1	Pressure gauge support DIN 16 281-A *alternative* Pressure gauge support DIN 16 281-H	S006.12.110 S006.12.115/Alu*	S006.12.110 S006.12.115/Alu*	
6	1	Sealing washer DIN EN 837-1 *alternative* with O-ring sealing	S006.03.004/Fe* S006.03.180.03	S006.03.007 S006.03.280.03	
7	1	Instrument			

© This drawing is the exclusive property of ARMATURENFABRIK FRANZ SCHNEIDER GmbH & Co. KG. Without their consent it may not be reproduced or given to third parties.

Armaturenfabrik Franz Schneider GmbH & Co.KG • D-74226 Nordheim • Germany • Tel. 07133/101-0 • Fax 07133/101-180

SCHNEIDER Armaturen	**Hook-up:** **Pressure Measurement** **Condition of Fluid:** **Gas** **Max. Operating Pressure:** **PB 400 bar**	PRG08 01/02

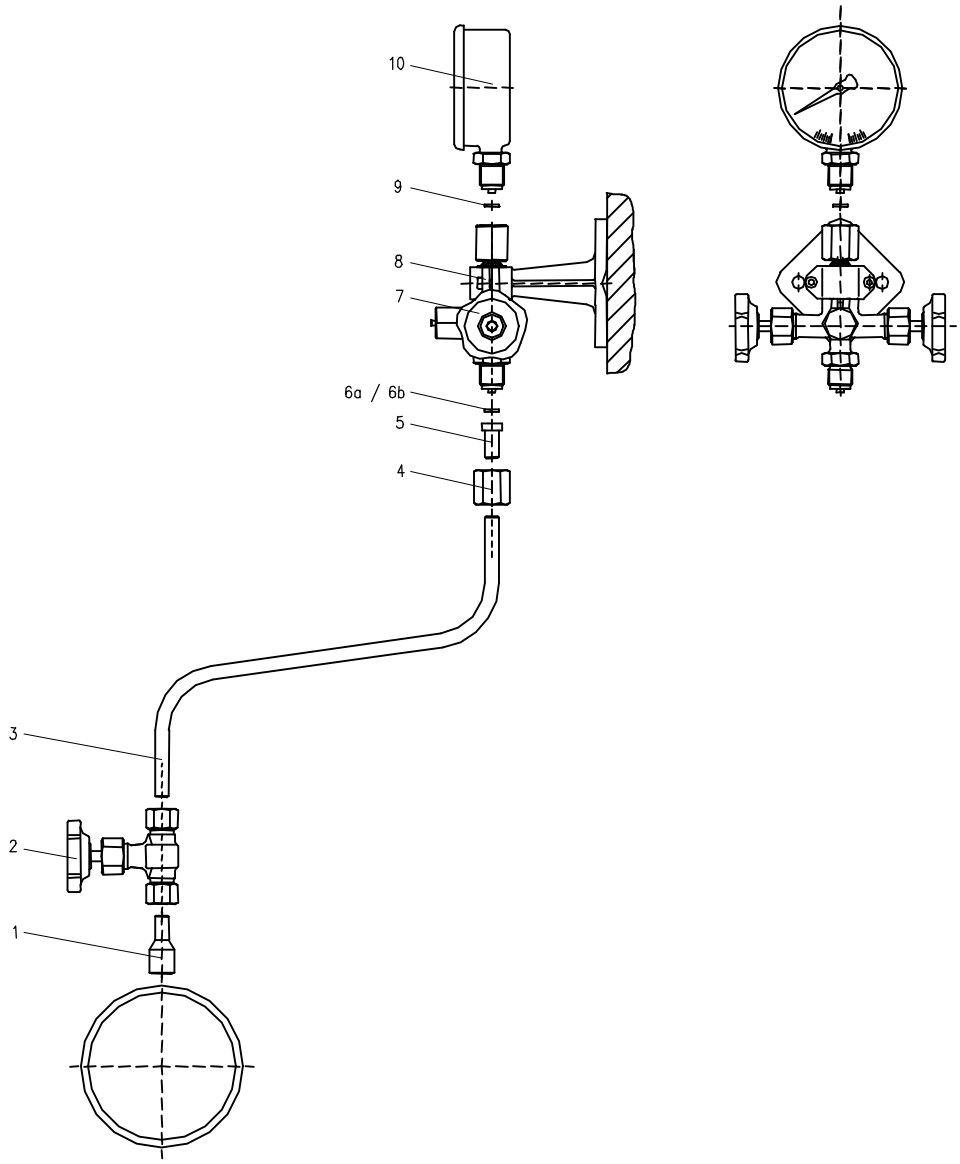

* different material

Pos.	Qty.	Designation	Part no. Steel	Part no. Stainless steel	Remark
1	1	Pressure tap outlet: weld end Ø 12			
2	1	Primary isolation valve PN 400 both sides tube fitting 12S	S338.03.100	S338.03.200	
3	1	Impulse line Ø 12			
4	1	Union nut Ø 12	S006.01.100	S006.01.200	
5	1	Nipple Ø 12	S006.02.100	S006.02.200	
6a	1	Sealing washer DIN EN 837-1	S006.03.004/Fe*	S006.03.007	
6b	1	Sealing washer DIN EN 837-1	S006.03.003/Cu*		
		Pos. 4, 5, 6a as accessory kit	S007.45.102.01	S007.45.202.01	
		Pos. 4, 5, 6b as accessory kit	S007.45.102.0103		
7	1	Pressure gauge valve DIN 16 272 form B, with test connection male / turning nut G 1/2	S004.60.120	S004.60.220	
8	1	Pressure gauge support DIN 16 281-A *alternative* Pressure gauge support DIN 16 281-H	S006.12.110 S006.12.115/Alu*	S006.12.110 S006.12.115/Alu*	
9	1	Sealing washer DIN EN 837-1	S006.03.004/Fe*	S006.03.007	
10	1	Instrument			

© This drawing is the exclusive property of ARMATURENFABRIK FRANZ SCHNEIDER GmbH & Co. KG. Without their consent it may not be reproduced or given to third parties.

Armaturenfabrik Franz Schneider GmbH & Co.KG • D-74226 Nordheim • Germany • Tel. 07133/101-0 • Fax 07133/101-180

SCHNEIDER Armaturen	**Hook-up:**	**Pressure Measurement** **Valves with DVGW - Registration**	PRG09
	Condition of Fluid:	**Gas**	
	Max. Operating Pressure:	**PB 100 bar**	01/02

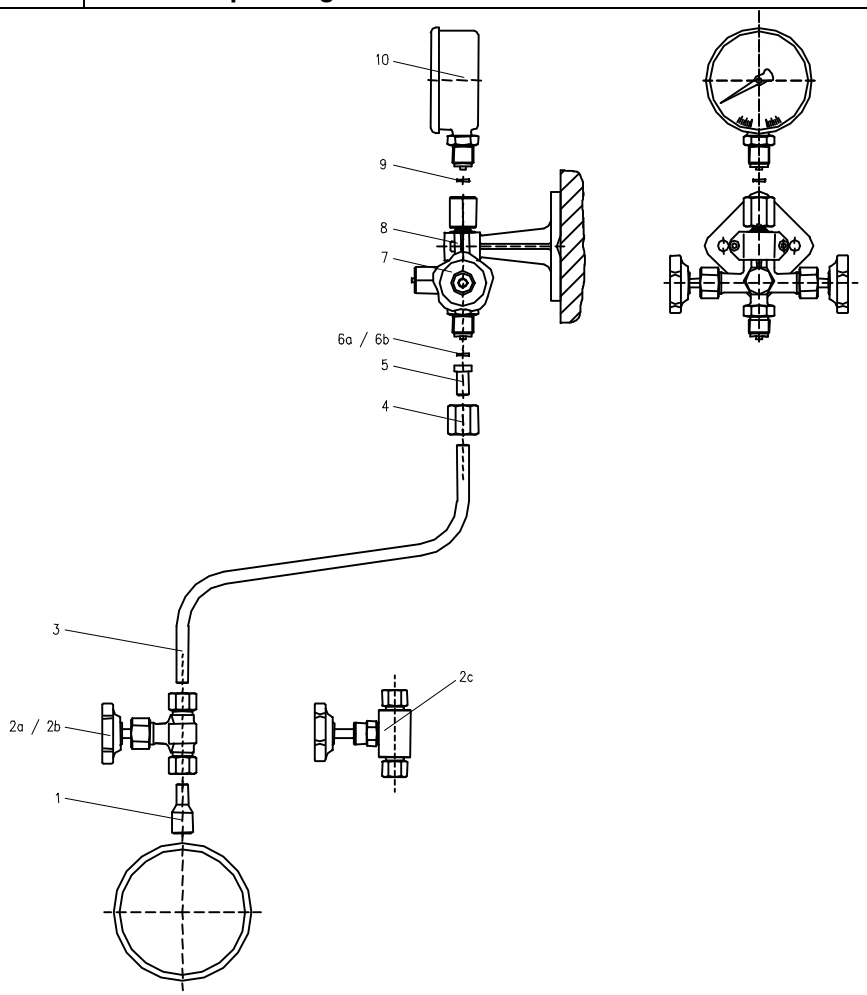

* different material

Pos.	Qty.	Designation	Part no. Steel	Part no. Stainless steel	Remark
1	1	Pressure tap outlet: weld end Ø 12			
2a	1	Primary isolation valve PN 100 both sides tube fitting 12S with DVGW - registration	S338.34.100.02		
2b	1	Primary isolation valve PN 100 both sides tube fitting 12S, galvanized steel with DVGW - registration	S338.34.100.0283		
2c	1	Primary isolation valve PN 100 both sides tube fitting 12L DVGW - registration in preparation	N334.01.104	N334.01.204	
3	1	Impulse line Ø 12			
4	1	Union nut Ø 12	S006.01.100	S006.01.200	
5	1	Nipple Ø 12	S006.02.100	S006.02.200	
6a	1	Sealing washer DIN EN 837-1	S006.03.004/Fe*	S006.03.007	
6b	1	Sealing washer DIN EN 837-1	S006.03.003/Cu*		
		Pos. 4, 5, 6a as accessory kit	S007.45.102.01	S007.45.202.01	
		Pos. 4, 5, 6b as accessory kit	S007.45.102.0103		
7	1	Pressure gauge valve sim. DIN 16 272 form B, with test connection male / turning nut G 1/2 with DVGW - registration	S004.80.120	S004.80.220	
8	1	Pressure gauge support DIN 16 281-A *alternative* Pressure gauge support DIN 16 281-H	S006.12.110 S006.12.115/Alu*	S006.12.110 S006.12.115/Alu*	
9	1	Sealing washer DIN EN 837-1 alternative with O-ring sealing	S006.03.004/Fe* S006.03.180.03	S006.03.007 S006.03.280.03	
10	1	Instrument			

© This drawing is the exclusive property of ARMATURENFABRIK FRANZ SCHNEIDER GmbH & Co. KG. Without their consent it may not be reproduced or given to third parties.

Armaturenfabrik Franz Schneider GmbH & Co.KG • D-74226 Nordheim • Germany • Tel. 07133/101-0 • Fax 07133/101-180

SCHNEIDER Armaturen	Hook-up:	Pressure Measurement	PRG10
	Condition of Fluid:	Gas	01/02
	Max. Operating Pressure:	PB 420 bar	

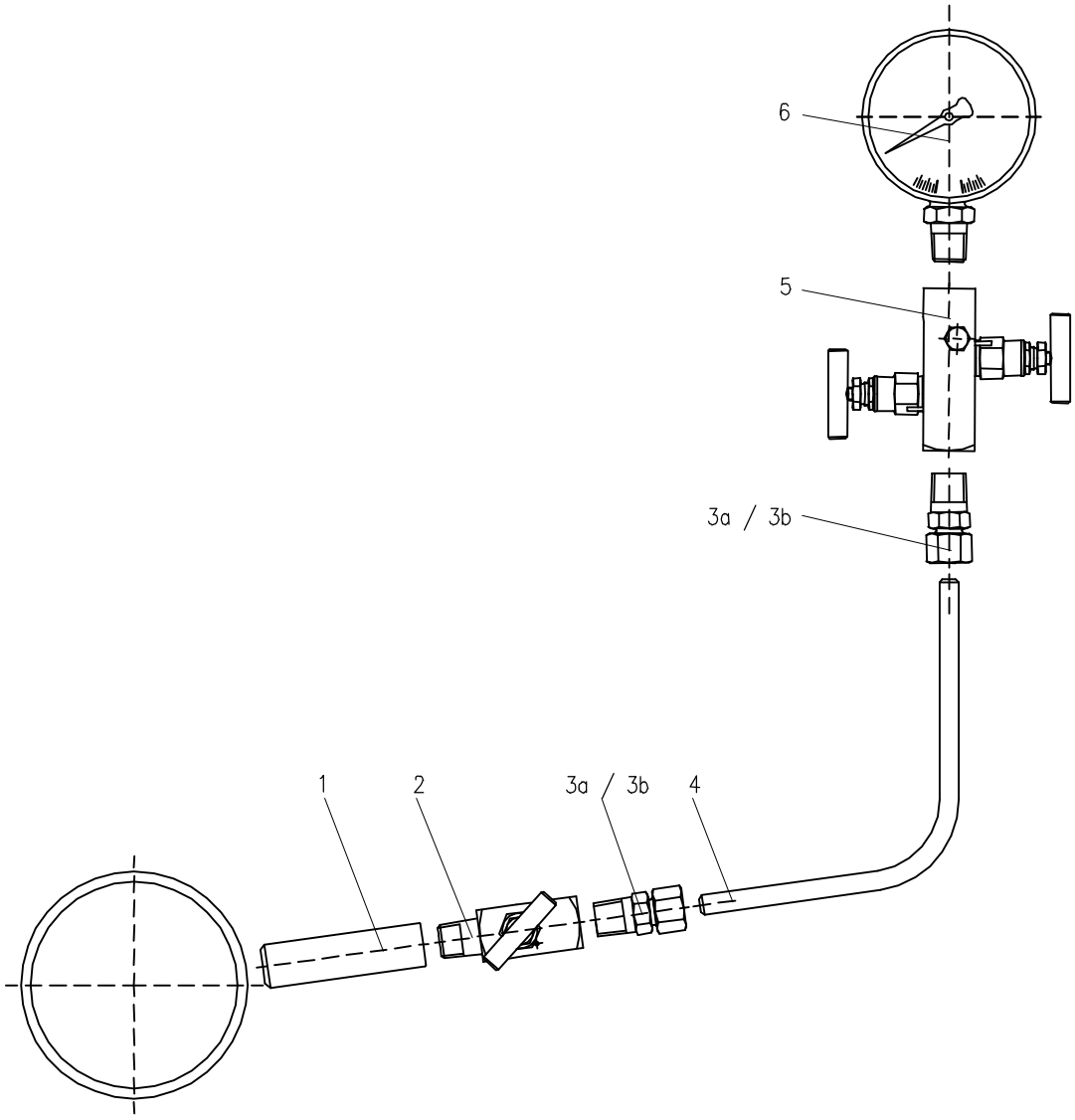

Pos.	Qty.	Designation	Part no. Steel	Part no. Stainless steel	Remark
1	1	Pressure tap outlet: female 1/2-14 NPT			
2	1	Primary isolation valve PN 420 male / female 1/2-14 NPT	N354.07.101.05	N354.07.401.05	
3a	2	Male connector 1/2-14 NPT / tube fitting 12S	S007.53.108.05	S007.53.208.05	
3b	2	Male connector 1/2-14 NPT / twin ferrule compression ends Ø 12	choice of customer		
4	1	Impulse line Ø 12			
5	1	Block and bleed valve PN 420 female / female 1/2-14 NPT	N354.60.109.05	N354.60.409.05	
6	1	Instrument			

© This drawing is the exclusive property of ARMATURENFABRIK FRANZ SCHNEIDER GmbH & Co. KG. Without their consent it may not be reproduced or given to third parties.

SCHNEIDER Armaturen	Hook-up:	Pressure Measurement	PRG11
	Condition of Fluid:	Gas	01/02
	Max. Operating Pressure:	PB 420 bar	

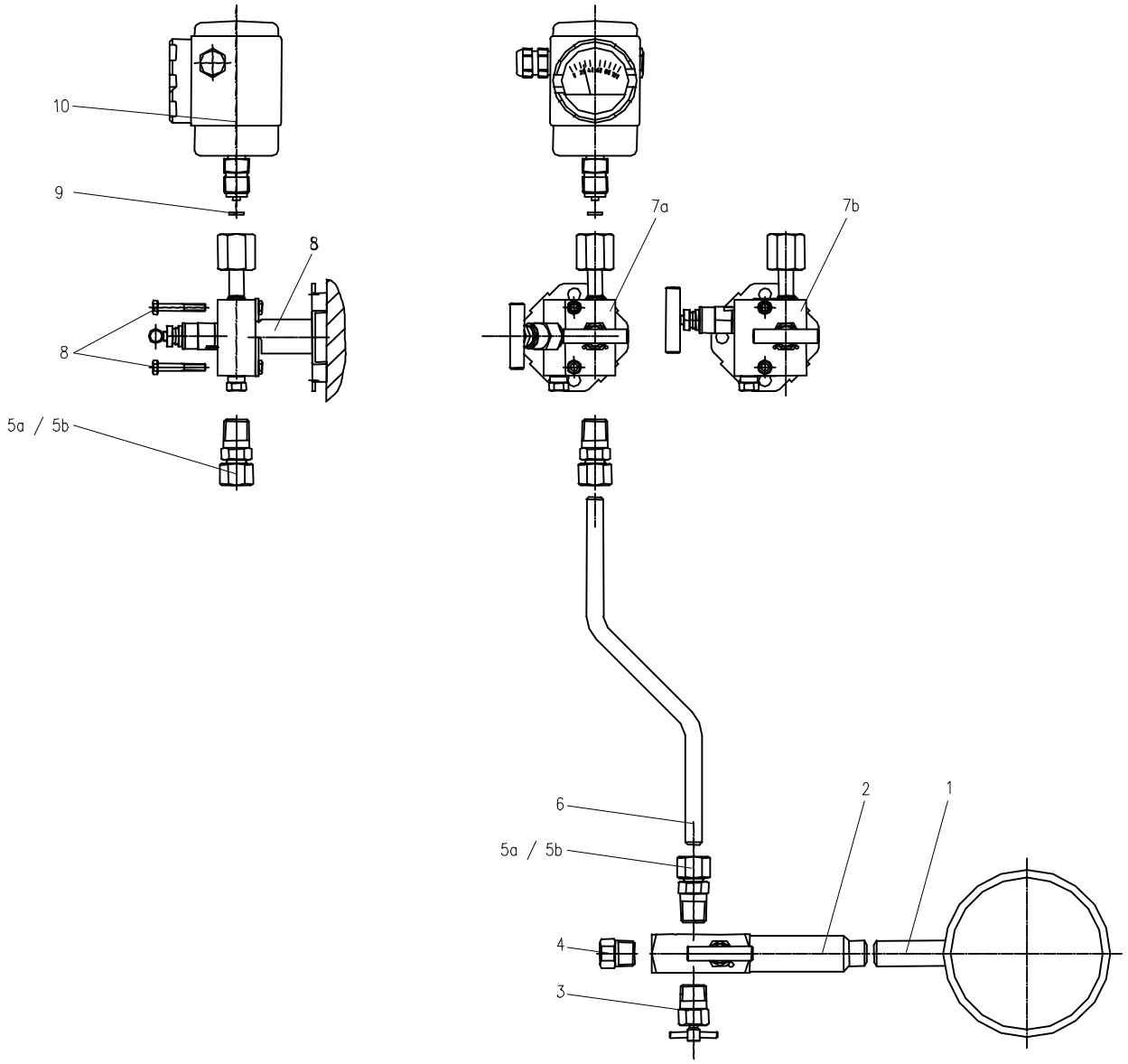

Pos.	Qty.	Designation	Part no. Stainless steel	Remark
1	1	Pressure tap		
2	1	Multiport valve PN 420 with extended body weld end / female 1/2-14 NPT	N354.17.427.01	
3	1	Vent valve 1/2-14 NPT	S312.09.405.14	
4	1	Screw plug 1/2-14 NPT	S006.14.441.03	
5a	2	Male connector 1/2-14 NPT / tube fitting 12S	S007.53.208.05	
5b	2	Male connector 1/2-14 NPT / twin ferrule compression ends Ø 12	choice of customer	
6	1	Impulse line Ø 12		
7a	1	2 valve manifold PN 420 female 1/2-14 NPT / turning nut G 1/2	N342.44.483.22	
7b	1	2 valve manifold PN 420 female 1/2-14 NPT / turning nut G 1/2	N342.44.483.02	
8	1	Accessory kit consisting of: mounting bracket and hexagon head cap screw M 6 x 40	S006.12.216.58	
9	1	Sealing washer DIN EN 837-1	S006.03.007	
10	1	Instrument		

© This drawing is the exclusive property of ARMATURENFABRIK FRANZ SCHNEIDER GmbH & Co. KG. Without their consent it may not be reproduced or given to third parties.

SCHNEIDER Armaturen	**Hook-up:**	**Pressure Measurement**	PRG12
	Condition of Fluid:	**Gas**	01/02
	Max. Operating Pressure:	**PB 420 bar**	

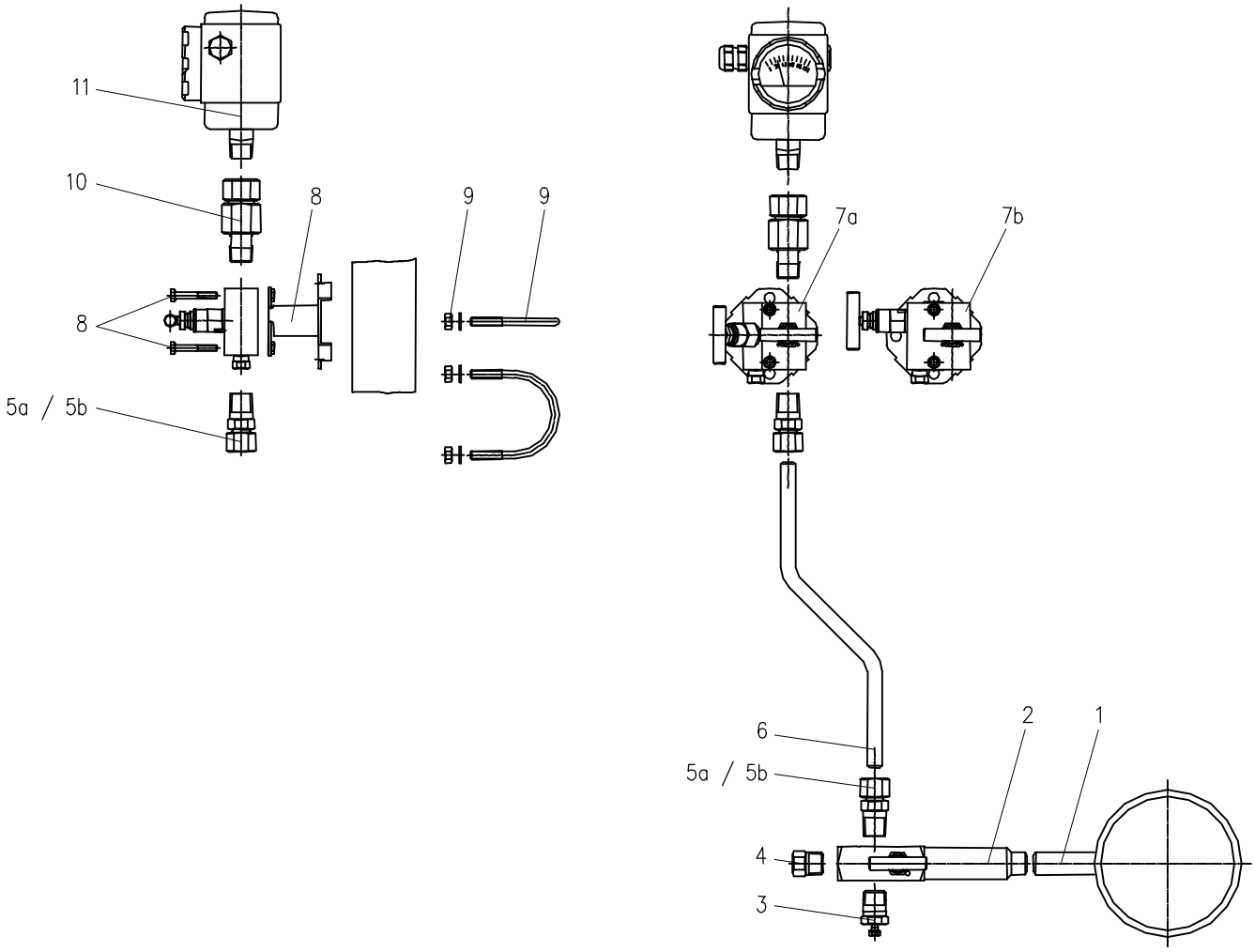

Pos.	Qty.	Designation	Part no. Stainless steel	Remark
1	1	Pressure tap		
2	1	Multiport valve PN 420 with extended body weld end / female 1/2-14 NPT	N354.17.427.01	
3	1	Screw plug 1/2-14 NPT	S006.14.441.03	
4	1	Vent valve 1/2-14 NPT	S312.09.405.04	
5a	2	Male connector 1/2-14 NPT / tube fitting 12S	S007.53.208.05	
5b	2	Male connector 1/2-14 NPT / twin ferrule compression ends Ø 12	choice of customer	
6	1	Impulse line Ø 12		
7a	1	2 valve manifold PN 420 female / female 1/2-14 NPT	N342.44.483.01	
7b	1	2 valve manifold PN 420 female / female 1/2-14 NPT	N342.44.483.21	
8	1	Accessory kit consisting of: mounting bracket and hexagon head cap screw M 6 x 40	S006.12.216.58	
9	1	Accessory kit for mounting on a 2" pipe consisting of: 'U' bolt, nuts and washers	S006.42.205	
10	1	Swivel gauge adaptor male / female 1/2-14 NPT	S007.45.206.05 *alternative* S007.45.206.15	
11	1	Instrument		

© This drawing is the exclusive property of ARMATURENFABRIK FRANZ SCHNEIDER GmbH & Co. KG. Without their consent it may not be reproduced or given to third parties.

Hook-up:	**Pressure Measurement**	PRL01
Condition of Fluid:	**Liquid**	01/02
Max. Operating Pressure:	**PB 400 bar**	

3

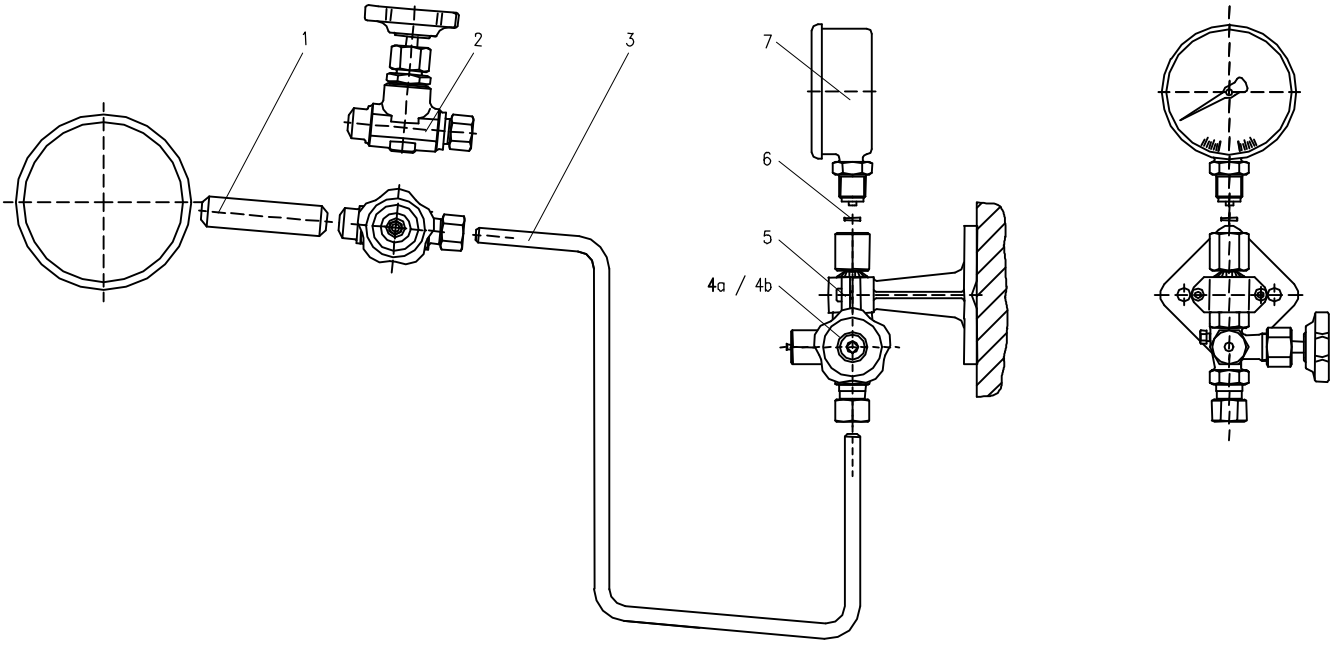

* different material

Pos.	Qty.	Designtion	Part no. Steel	Part no. Stainless steel	Remark
1	1	Pressure tap outlet: weld end Ø 24 x 7,1	S007.56.602.01	S007.56.202.01	
2	1	Primary isolation valve PN 400 DN 8 Ø 24 x 7,1 / tube fitting12S	S350.05.130.09	S350.05.230.09	
3	1	Impulse line Ø 12			
4a	1	Pressure gauge valve DIN 16 270 form B, without test connection tube fitting 12S / turning nut G 1/2	S004.16.120.13	S004.16.220.13	
4b	1	Pressure gauge valve DIN 16 271 form B, with test connection tube fitting 12S / turning nut G 1/2	S004.17.120.13	S004.17.220.13	
5	1	Pressure gauge support DIN 16 281-A *alternative* Pressure gauge support DIN 16 281-H	S006.12.110 S006.12.115/Alu*	S006.12.110 S006.12.115/Alu*	
6	1	Sealing washer DIN EN 837-1	S006.03.004Fe*	S006.03.007	
7	1	Instrument			

© This drawing is the exclusive property of ARMATURENFABRIK FRANZ SCHNEIDER GmbH & Co. KG. Without their consent it may not be reproduced or given to third parties.

SCHNEIDER Armaturen	**Hook-up:** **Pressure Measurement** **Condition of Fluid:** **Liquid** **Max. Operating Pressure:** **PB 400 bar**	PRL02 01/02

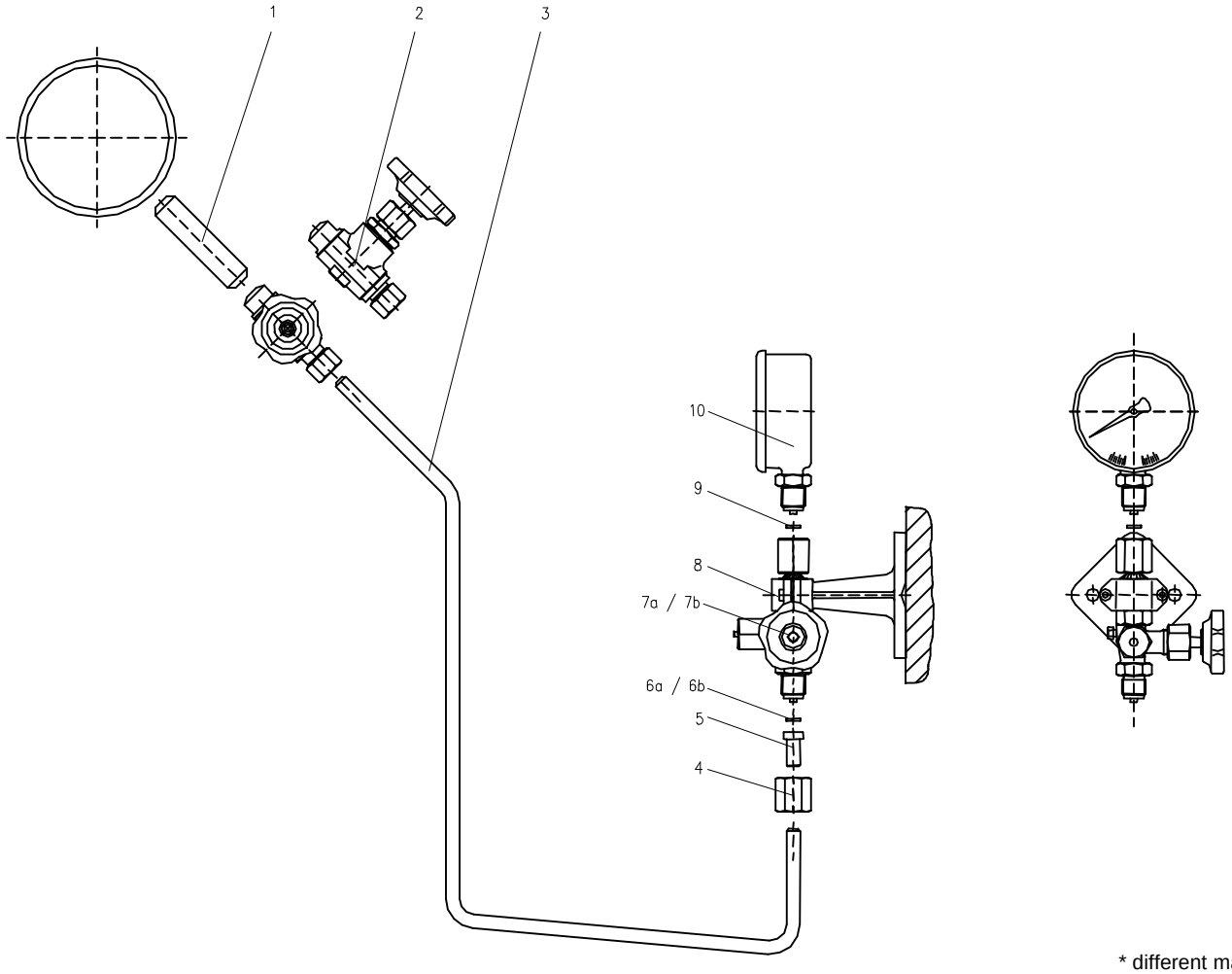

* different material

Pos.	Qty.	Designation	Part no. Steel	Part no. Stainless steel	Remark
1	1	Pressure tap outlet: weld end Ø 24 x 7,1	S007.56.602.01	S007.56.202.01	
2	1	Primary isolation valve PN 400 DN 8 Ø 24 x 7,1 / tube fitting 12S	S350.05.130.09	S350.05.230.09	
3	1	Impulse line Ø 12			
4	1	Union nut Ø 12	S006.01.100	S006.01.200	
5	1	Nipple Ø 12	S006.02.100	S006.02.200	
6a	1	Sealing washer DIN EN 837-1	S006.03.004/Fe*	S006.03.007	
6b	1	Sealing washer DIN EN 837-1	S006.03.003/Cu*		
		Pos. 4, 5, 6a as accessory kit	S007.45.102.01	S007.45.202.01	
		Pos. 4, 5, 6b as accessory kit	S007.45.102.0103		
7a	1	Pressure gauge valve DIN 16 270 form B, without test connection male / turning nut G 1/2	S004.16.120	S004.16.220	
7b	1	Pressure gauge valve DIN 16 271 form B, with test connection male / turning nut G 1/2	S004.17.120	S004.17.220	
8	1	Pressure gauge support DIN 16 281-A *alternative* Pressure gauge support DIN 16 281-H	S006.12.110 S006.12.115/Alu*	S006.12.110 S006.12.115/Alu*	
9	1	Sealing washer DIN EN 837-1	S006.03.004/Fe*	S006.03.007	
10	1	Instrument			

© This drawing is the exclusive property of ARMATURENFABRIK FRANZ SCHNEIDER GmbH & Co. KG. Without their consent it may not be reproduced or given to third parties.

Armaturenfabrik Franz Schneider GmbH & Co.KG • D-74226 Nordheim • Germany • Tel. 07133/101-0 • Fax 07133/101-180

SCHNEIDER Armaturen	**Hook-up:** **Pressure Measurement** **Condition of Fluid:** **Liquid** **Max. Operating Pressure:** **PB 400 bar**	PRL03 01/02

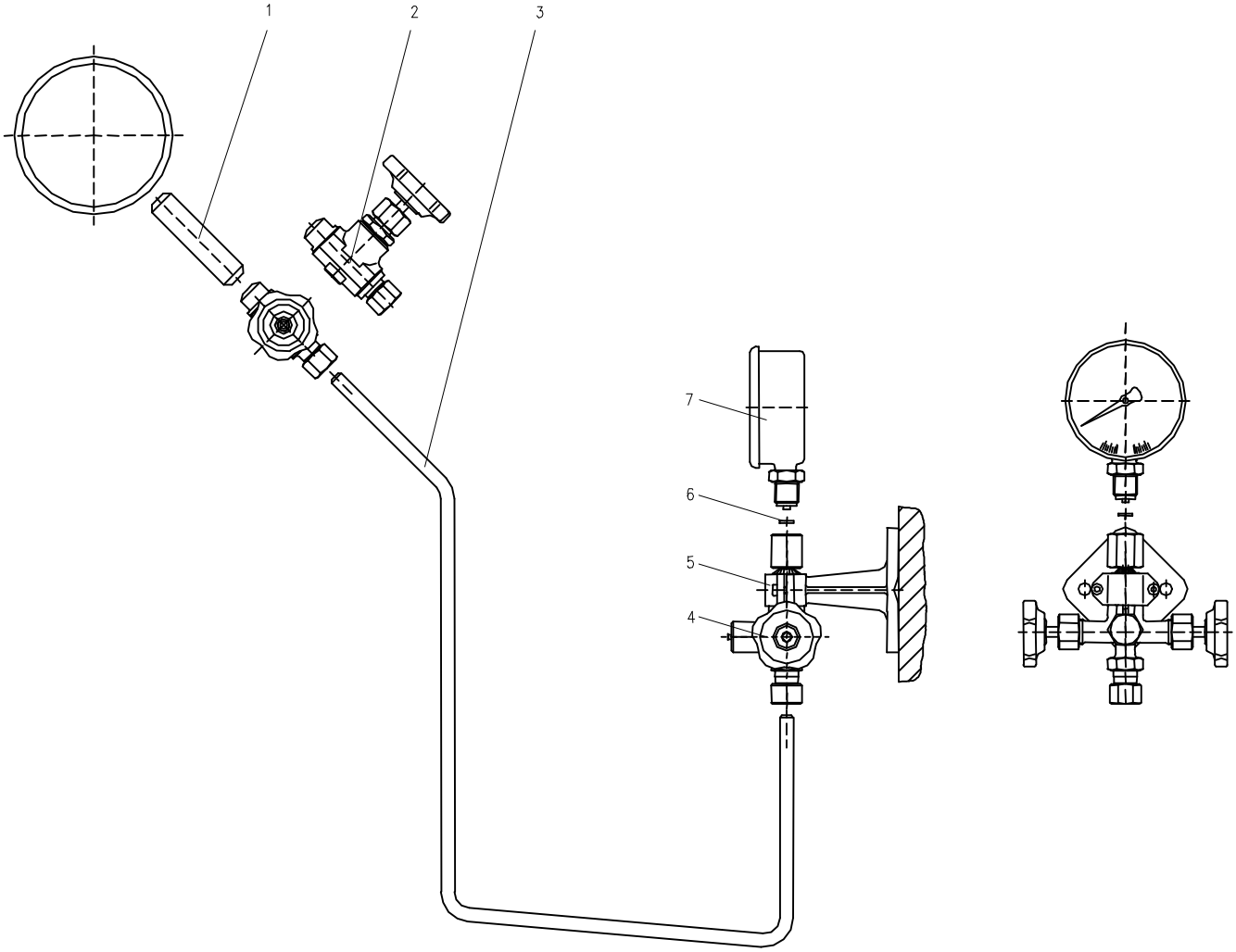

* different material

Pos.	Qty.	Designation	Part no. Steel	Part no. Stainless steel	Remark
1	1	Pressure tap outlet: weld end Ø 24 x 7,1	S007.56.602.01	S007.56.202.01	
2	1	Primary isolation valve PN 400 DN 8 Ø 24 x 7,1 / tube fitting 12S	S350.05.130.09	S350.05.230.09	
3	1	Impulse line Ø 12			
4	1	Pressure gauge valve DIN 16 272 form B, with test connection tube fitting 12S / turning nut G 1/2	S004.60.120.13	S004.60.220.13	
5	1	Pressure gauge support DIN 16 281-A *alternative* Pressure gauge support DIN 16 281-H	S006.12.110 S006.12.115/Alu*	S006.12.110 S006.12.115/Alu*	
6	1	Sealing washer DIN EN 837-1	S006.03.004/Fe*	S006.03.007	
7	1	Instrument			

© This drawing is the exclusive property of ARMATURENFABRIK FRANZ SCHNEIDER GmbH & Co. KG. Without their consent it may not be reproduced or given to third parties.

SCHNEIDER Armaturen	**Hook-up:** **Pressure Measurement** **Condition of Fluid:** **Liquid** **Max. Operating Pressure:** **PB 400 bar**	PRL04 01/02

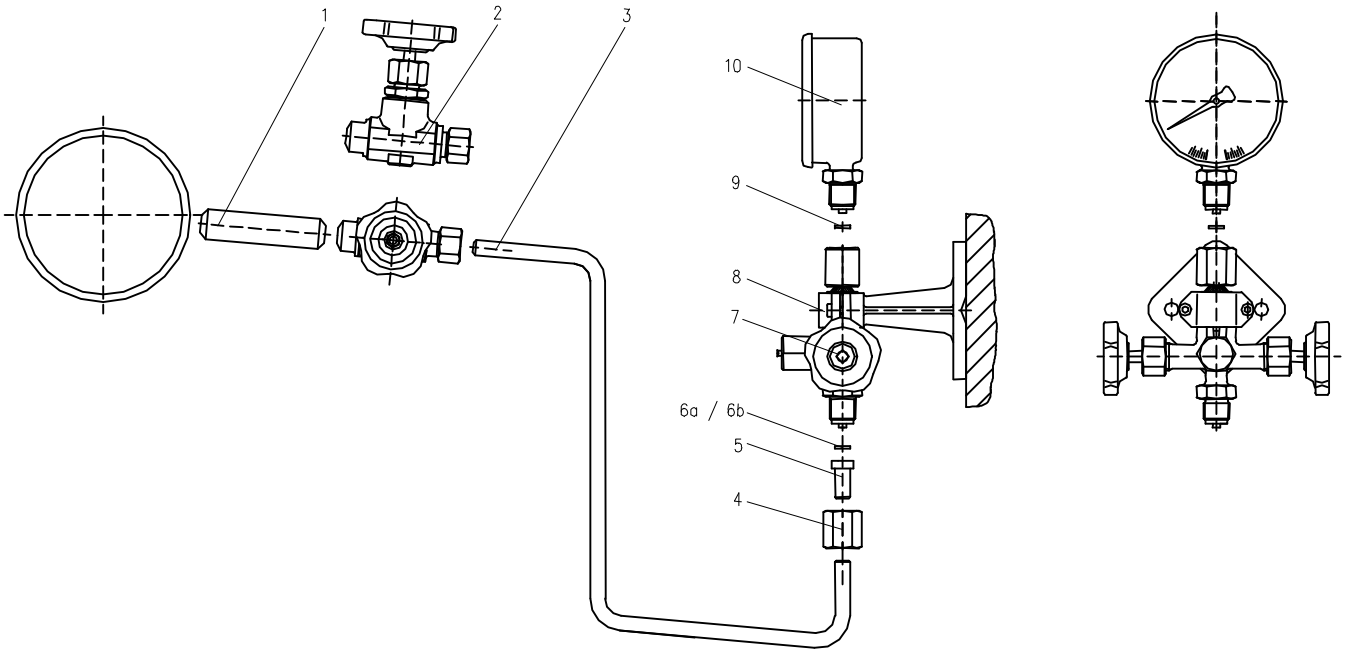

* different material

Pos.	Qty.	Designation	Part no. Steel	Part no. Stainless steel	Remark
1	1	Pressure tap outlet: weld end Ø 24 x 7,1	S007.56.602.01	S007.56.202.01	
2	1	Primary isolation valve PN 400 DN 8 Ø 24 x 7,1 / tube fitting 12S	S350.05.130.09	S350.05.230.09	
3	1	Impulse line Ø 12			
4	1	Union nut Ø 12	S006.01.100	S006.01.200	
5	1	Nipple Ø 12	S006.02.100	S006.02.200	
6a	1	Sealing washer DIN EN 837-1	S006.03.004/Fe*	S006.03.007	
6b	1	Sealing washer DIN EN 837-1	S006.03.003/Cu*		
		Pos. 4, 5, 6a as accessory kit	S007.45.102.01	S007.45.202.01	
		Pos. 4, 5, 6b as accessory kit	S007.45.102.0103		
7	1	Pressure gauge valve DIN 16 272 form B, with test connection male / turning nut G 1/2	S004.60.120	S004.60.220	
8	1	Pressure gauge support DIN 16 281-A *alternative* Pressure gauge support DIN 16 281-H	S006.12.110 S006.12.115/Alu*	S006.12.110 S006.12.115/Alu*	
9	1	Sealing washer DIN EN 837-1	S006.03.004/Fe*	S006.03.007	
10	1	Instrument			

© This drawing is the exclusive property of ARMATURENFABRIK FRANZ SCHNEIDER GmbH & Co. KG. Without their consent it may not be reproduced or given to third parties.

SCHNEIDER Armaturen	**Hook-up:** **Pressure Measurement** **Condition of Fluid:** **Liquid or Steam** **Max. Operating Pressure:** **PB 250 bar**	PRL/S01 01/02

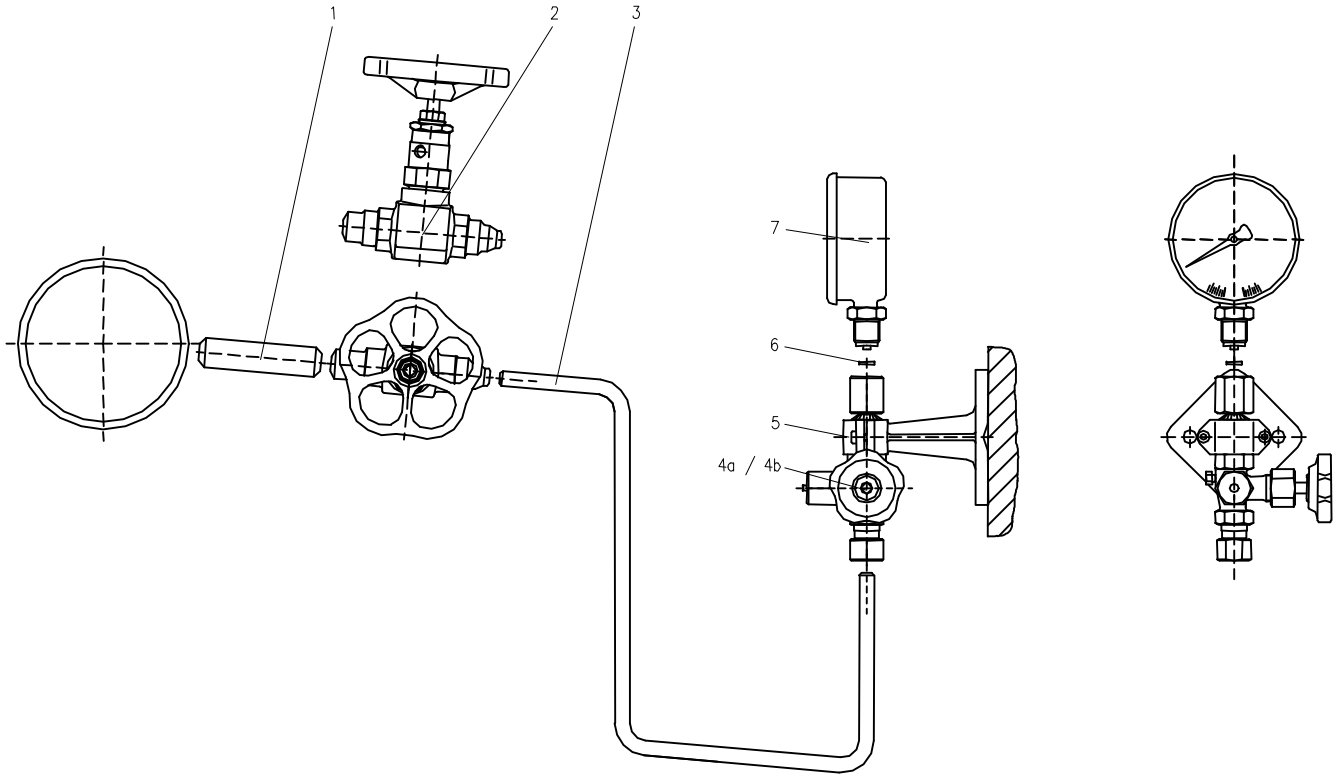

* different material

Pos.	Qty.	Designation	Part no. Steel	Part no. Stainless steel	Remark
1	1	Pressure tap outlet: weld end Ø 21,3 x 3,2			
2	1	Primary isolation valve PN 250 with external stem thread Ø 21,3 x 3,2 / Ø 12 x 1,5	S340.11.612.16	S340.11.212.16	
3	1	Impulse line Ø 12			
4a	1	Pressure gauge valve DIN 16 270 form B, without test connection tube fitting 12S / turning nut G 1/2	S004.16.120.13	S004.16.220.13	
4b	1	Pressure gauge valve DIN 16 271 form B, with test connection tube fitting 12S / turning nut G 1/2	S004.17.120.13	S004.17.220.13	
5	1	Pressure gauge support DIN 16 281-A *alternative* Pressure gauge support DIN 16 281-H	S006.12.110 S006.12.115/Alu*	S006.12.110 S006.12.115/Alu*	
6	1	Sealing washer DIN EN 837-1	S006.03.004/Fe*	S006.03.007	
7	1	Instrument			

© This drawing is the exclusive property of ARMATURENFABRIK FRANZ SCHNEIDER GmbH & Co. KG. Without their consent it may not be reproduced or given to third parties.

SCHNEIDER Armaturen	**Hook-up:** **Pressure Measurement** **Condition of Fluid:** **Liquid or Steam** **Max. Operating Pressure:** **PB 400 bar**	PRL/S02 01/02

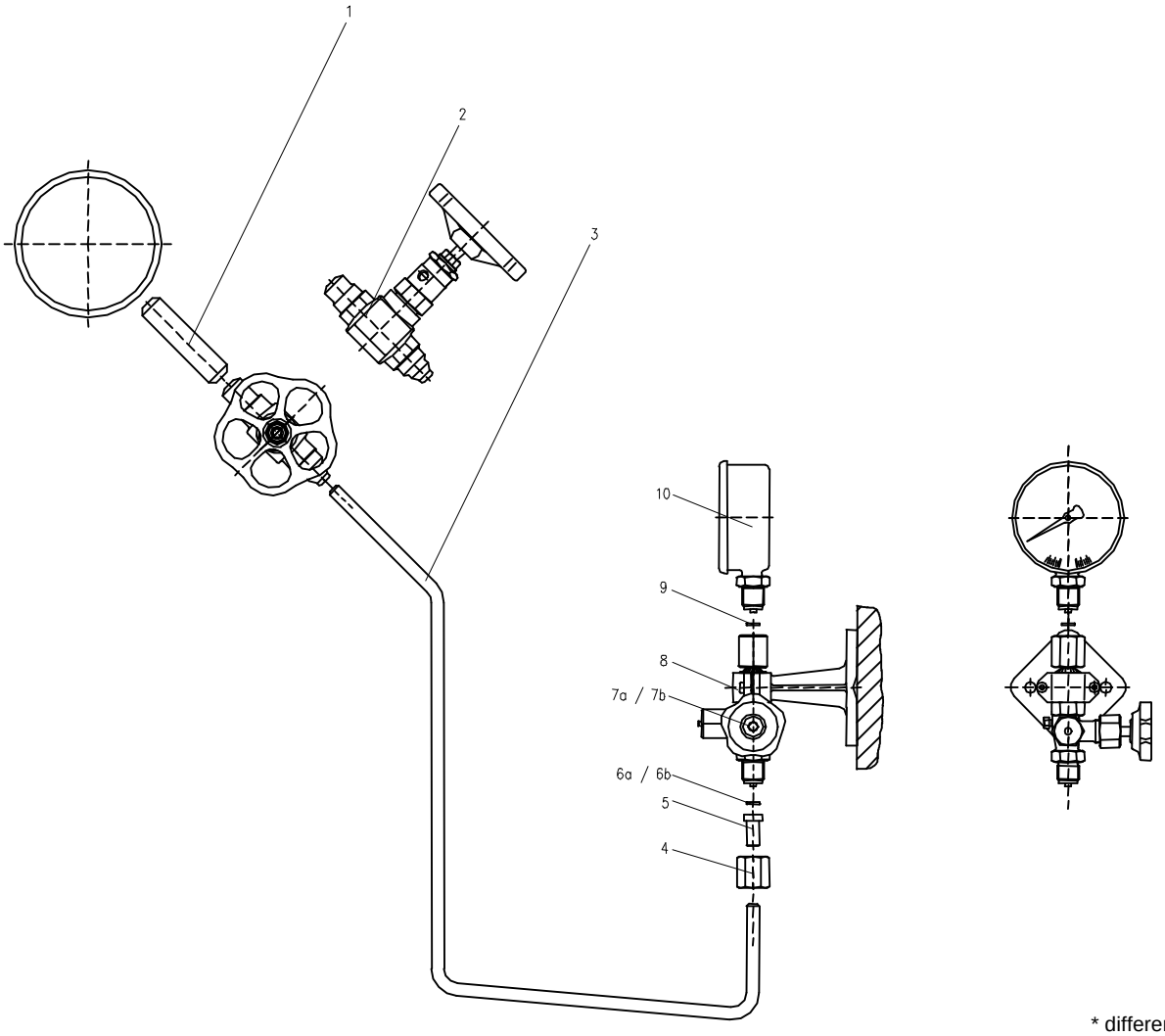

* different material

Pos.	Qty.	Designation	Part no. Steel	Part no. Stainless steel	Remark
1	1	Pressure tap outlet: weld end Ø 24 x 7,1	S007.56.600.66	S007.56.200.66	
2	1	Primary isolation valve PN 500 DN 8 with external stem thread Ø 24 x 7,1 / Ø 14 x 2,5	S340.11.636.40	S340.11.236.40	
3	1	Impulse line Ø 14			
4	1	Union nut Ø 14	S006.01.107	S006.01.207	
5	1	Nipple Ø 14	S006.02.117	S006.02.217	
6a	1	Sealing washer DIN EN 837-1	S006.03.004/Fe*	S006.03.007	
6b	1	Sealing washer DIN EN 837-1	S006.03.003/Cu*		
		Pos. 4, 5, 6a as accessory kit	S007.45.102.02	S007.45.202.02	
		Pos. 4, 5, 6b as accessory kit	S007.45.102.0203		
7a	1	Pressure gauge valve DIN 16 270 form B, without test connection male / turning nut G 1/2	S004.16.120	S004.16.220	
7b	1	Pressure gauge valve DIN 16 271 form B, with test connection male / turning nut G 1/2	S004.17.120	S004.17.220	
8	1	Pressure gauge support DIN 16 281-A *alternative* Pressure gauge support DIN 16 281-H	S006.12.110 S006.12.115/Alu*	S006.12.110 S006.12.115/Alu*	
9	1	Sealing washer DIN EN 837-1	S006.03.004/Fe*	S006.03.007	
10	1	Instrument			

© This drawing is the exclusive property of ARMATURENFABRIK FRANZ SCHNEIDER GmbH & Co. KG. Without their consent it may not be reproduced or given to third parties.

Armaturenfabrik Franz Schneider GmbH & Co.KG • D-74226 Nordheim • Germany • Tel. 07133/101-0 • Fax 07133/101-180

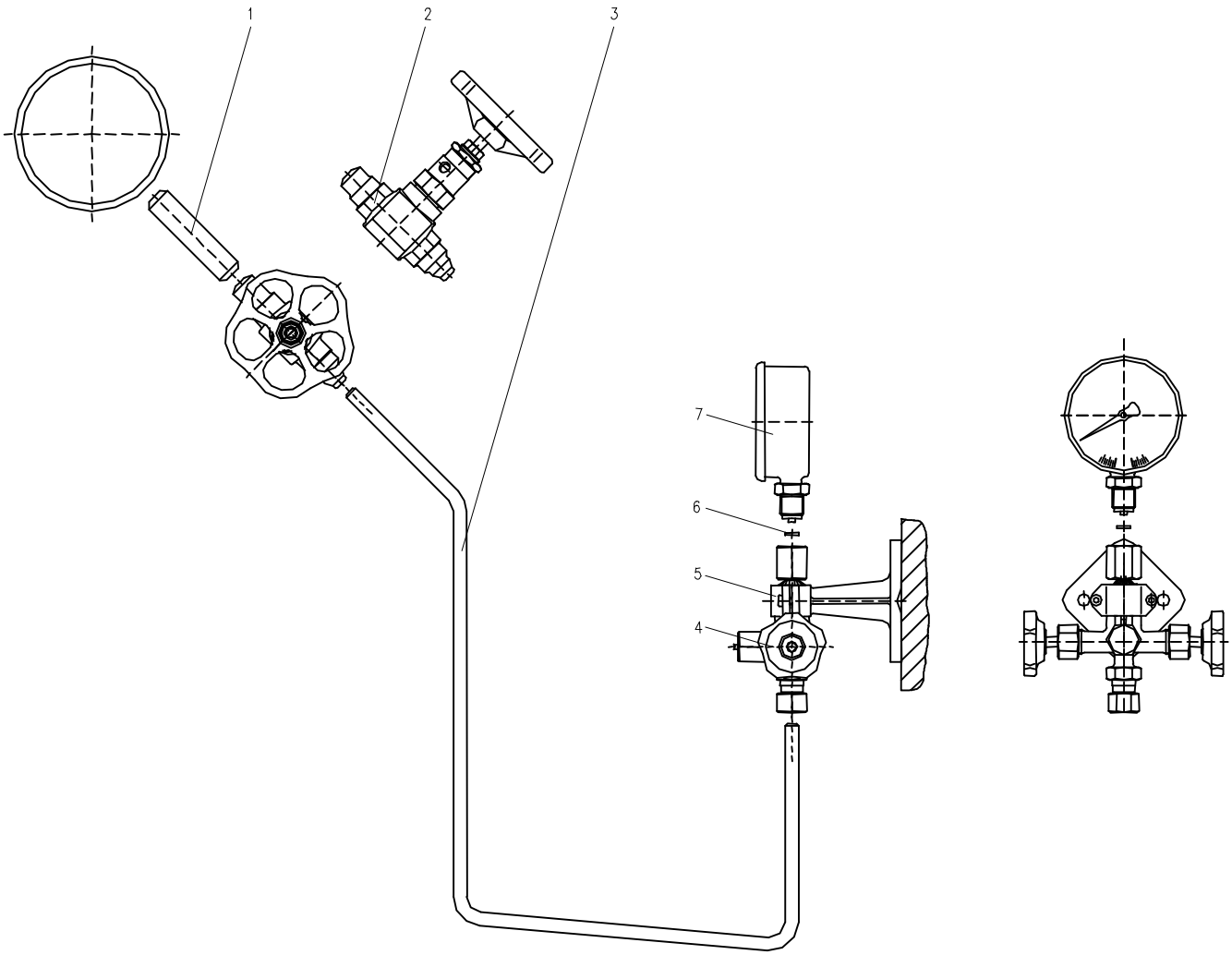

* different material

Pos.	Qty.	Designation	Part no. Steel	Part no. Stainless steel	Remark
1	1	Pressure tap outlet: weld end Ø 21,3 x 3,2			
2	1	Primary isolation valve PN 250 with external stem thread Ø 21,3 x 3,2 / Ø 12 x 1,5	S340.11.612.16	S340.11.212.16	
3	1	Impulse line Ø 12			
4	1	Pressure gauge valve DIN 16 272 form B, with test connection tube fitting 12S / turning nut G 1/2	S004.60.120.13	S004.60.220.13	
5	1	Pressure gauge support DIN 16 281-A *alternative* Pressure gauge support DIN 16 281-H	S006.12.110 S006.12.115/Alu*	S006.12.110 S006.12.115/Alu*	
6	1	Sealing washer DIN EN 837-1	S006.03.004/Fe*	S006.03.007	
7	1	Instrument			

© This drawing is the exclusive property of ARMATURENFABRIK FRANZ SCHNEIDER GmbH & Co. KG. Without their consent it may not be reproduced or given to third parties.

SCHNEIDER Armaturen	Hook-up:	Pressure Measurement	PRL/S04
	Condition of Fluid:	Liquid or Steam	01/02
	Max. Operating Pressure:	PB 400 bar	

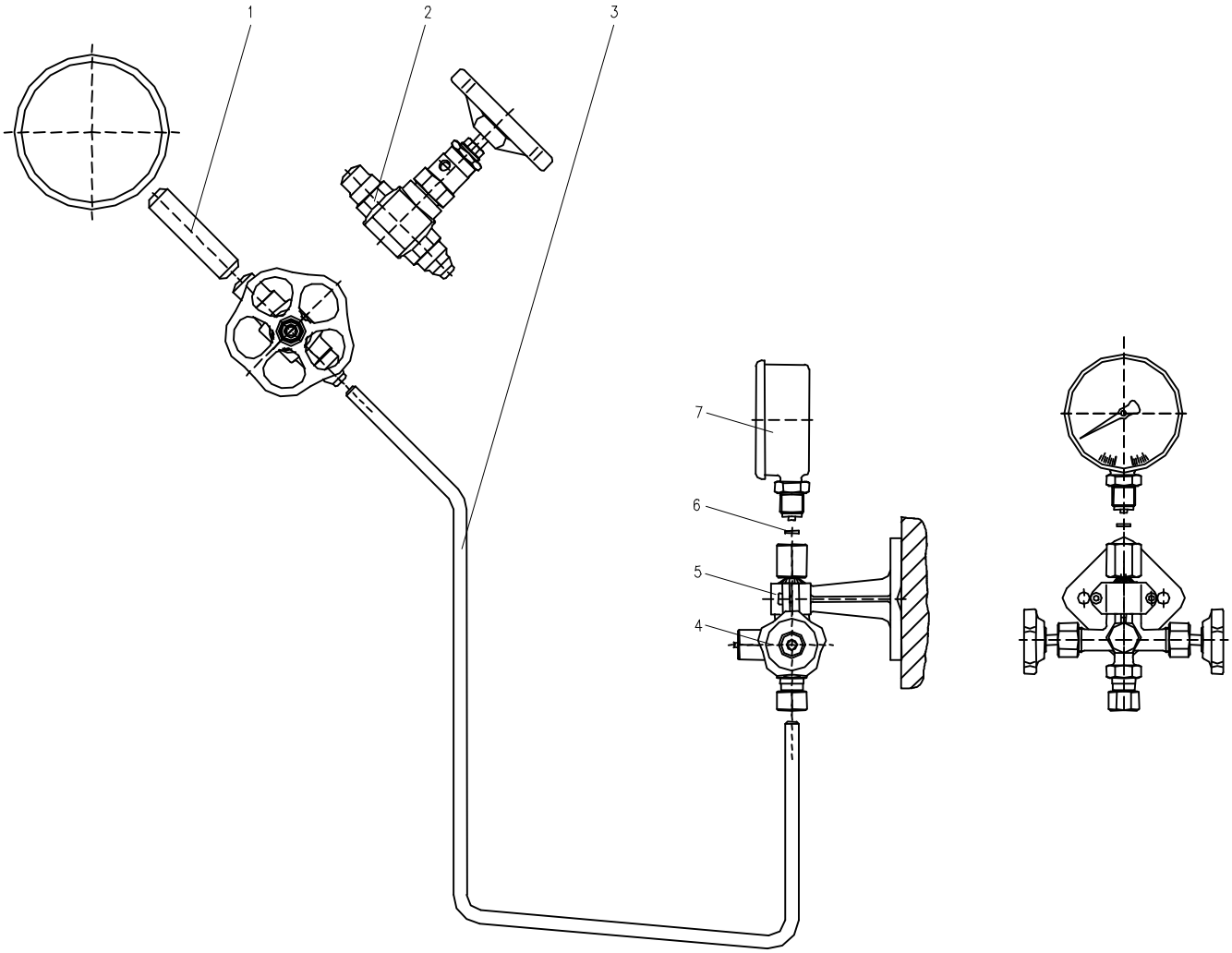

* different material

Pos.	Qty.	Designation	Part no. Steel	Part no. Stainless steel	Remark
1	1	Pressure tap outlet: weld end Ø 24 x 7,1			
2	1	Primary isolation valve PN 500 DN 8 with external stem thread Ø 24 x 7,1 / Ø 14 x 2,5	S340.11.636.40	S340.11.236.40	
3	1	Impulse line Ø 14			
4	1	Pressure gauge valve DIN 16 272 form B, with test connection tube fitting 14S / turning nut G 1/2	S004.60.124.13	S004.60.224.13	
5	1	Pressure gauge support DIN 16 281-A *alternative* Pressure gauge support DIN 16 281-H	S006.12.110 S006.12.115/Alu*	S006.12.110 S006.12.115/Alu*	
6	1	Sealing washer DIN EN 837-1	S006.03.004/Fe*	S006.03.007	
7	1	Instrument			

© This drawing is the exclusive property of ARMATURENFABRIK FRANZ SCHNEIDER GmbH & Co. KG. Without their consent it may not be reproduced or given to third parties.

Hook-up:	**Pressure Measurement**	PRL/S05
Condition of Fluid:	**Liquid or Steam**	01/02
Max. Operating Pressure:	**PB 400 bar**	

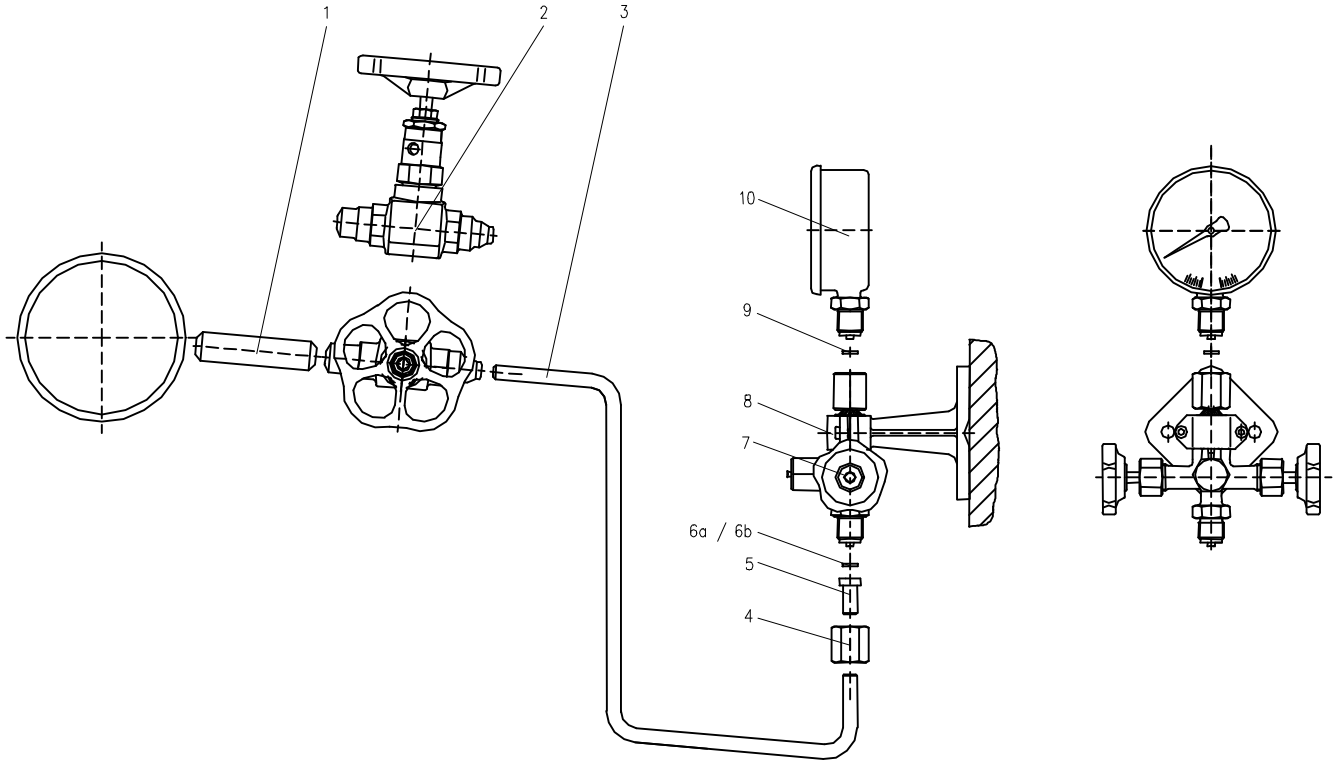

* different material

Pos.	Qty.	Designation	Part no. Steel	Part no. Stainless steel	Remark
1	1	Pressure tap outlet: weld end Ø 24 x 7,1			
2	1	Primary isolation valve PN 500 DN 8 with external stem thread Ø 24 x 7,1 / Ø 14 x 2,5	S340.11.636.40	S340.11.236.40	
3	1	Impulse line Ø 14			
4	1	Union nut Ø 14	S006.01.107	S006.01.207	
5	1	Nipple Ø 14	S006.02.117	S006.02.217	
6a	1	Sealing washer DIN EN 837-1	S006.03.004/Fe*	S006.03.007	
6b	1	Sealing washer DIN EN 837-1	S006.03.003/Cu*		
		Pos. 4, 5, 6a as accessory kit	S007.45.102.02	S007.45.202.02	
		Pos. 4, 5, 6b as accessory kit	S007.45.102.0203		
7	1	Pressure gauge valve DIN 16 272 form B, with test connection male / turning nut G 1/2	S004.60.120	S004.60.220	
8	1	Pressure gauge support DIN 16 281-A *alterntaive* Pressure gauge support DIN 16 281-H	S006.12.110 S006.12.115/Alu*	S006.12.110 S006.12.115/Alu*	
9	1	Sealing washer DIN EN 837-1	S006.03.004/Fe*	S006.03.007	
10	1	Instrument			

© This drawing is the exclusive property of ARMATURENFABRIK FRANZ SCHNEIDER GmbH & Co. KG. Without their consent it may not be reproduced or given to third parties.

Hook-ups
DPD

Differential pressure instruments mounted directly to the process line

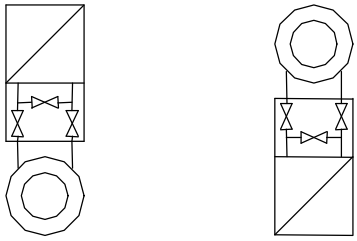

4

© This drawing is the exclusive property of ARMATURENFABRIK FRANZ SCHNEIDER GmbH & Co. KG. Without their consent it may not be reproduced or given to third parties.

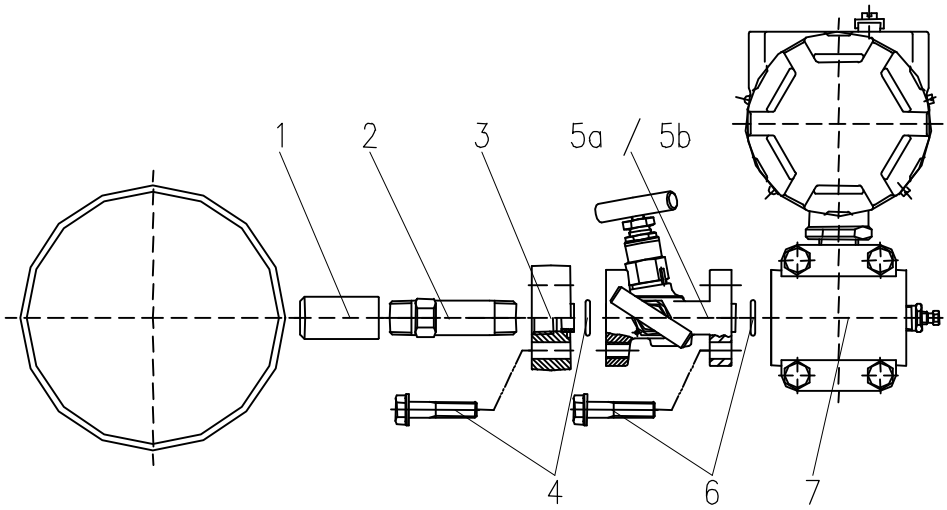

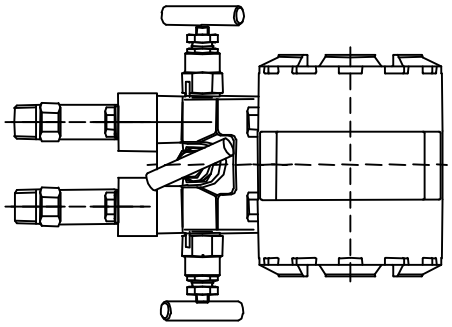

Pos.	Qty.	Designation	Part no. Stainless steel	Remark
1	2	Pressure tap		
2	2	Hex nipple		
3	2	Oval flange	S006.19.456.22	
4	1	Accessory kit consisting of: screws and seal rings	catalogue page 8.00 - see appendix A1	
5a	1	3 valve manifold PN 420 inlet: DIN 19 213-A with 7/16-20 UNF thread test / vent: female 1/4-18 NPT	N542.46.490.01	
5b	1	3 valve manifold PN 420 inlet: DIN 19 213-A with 7/16-20 UNF thread without test connection	N542.46.491.01	
6	1	Accessory kit consisting of: screws and seal rings	catalogue page 8.00 - see appendix A1	
7	1	Instrument		

Hook-ups
DPR

Differential pressure instruments mounted to racks or in enclosures etc.

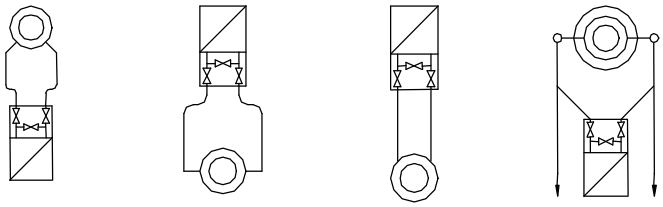

5

SCHNEIDER Armaturen	Hook-up:	Differential Pressure Measurement	DPRG01
	Condition of Fluid:	Gas	
	Max. Operating Pressure:	PB 100 bar	01/02

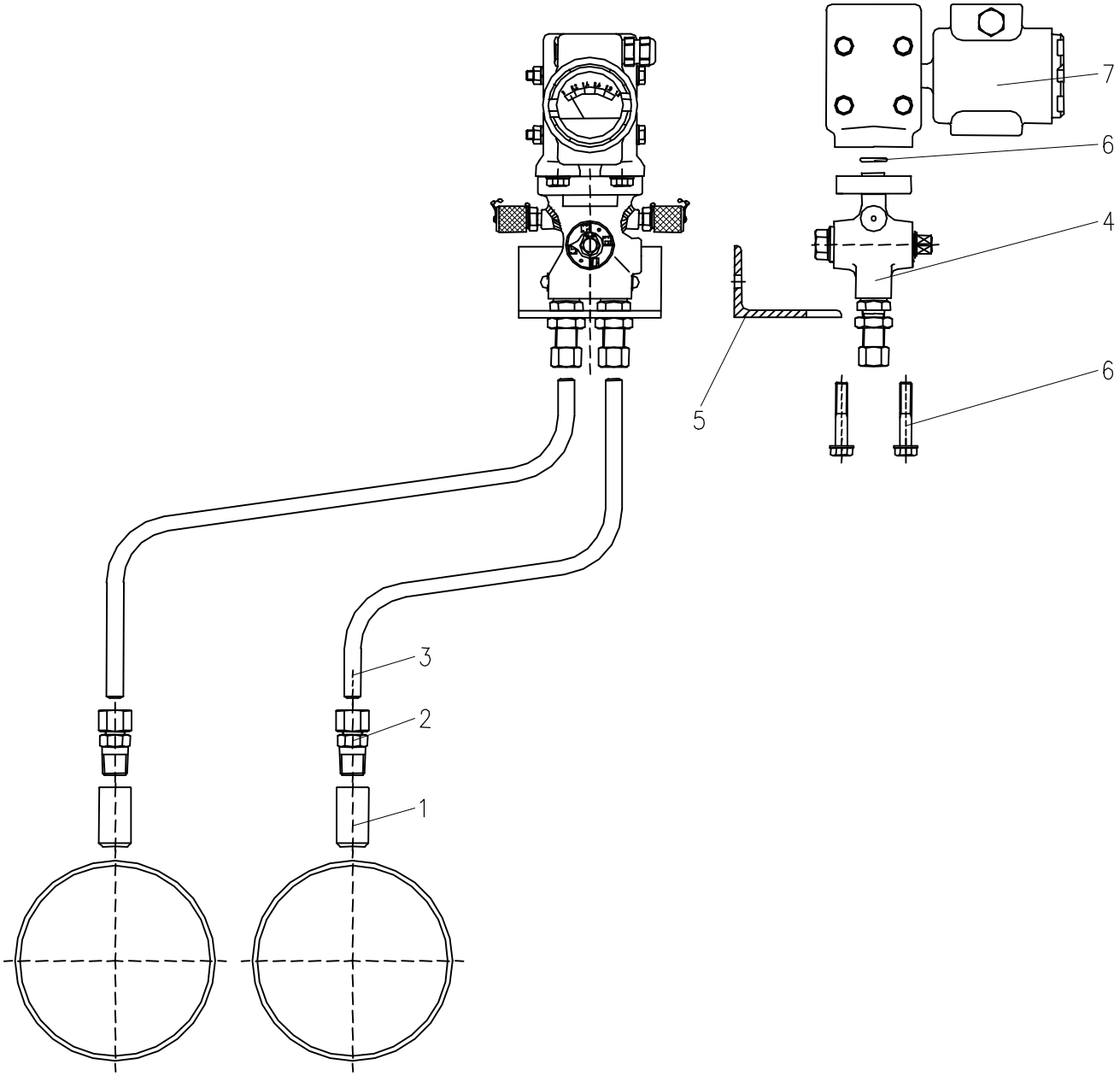

Pos.	Qty.	Designation	Part no. Steel	Part no. Stainless steel	Remark
1	1	Pressure tap			
2	2	Male connector G 3/8 / tube fitting 12S	510055	520102	
3	2	Impulse line Ø 12			
4	1	Multi-way cock PN 100 with test connection (quick coupling)	S345.06.102.26	S345.06.202.27	
5	1	Mounting bracket	S006.42.103.04	S006.42.203.04	
6	1	Accessory kit consisting of: screws and seal rings	catalogue page 8.00 - see appendix A1		
7	1	Instrument			

© This drawing is the exclusive property of ARMATURENFABRIK FRANZ SCHNEIDER GmbH & Co. KG. Without their consent it may not be reproduced or given to third parties.

SCHNEIDER Armaturen	**Hook-up:** **Flow Measurement** **Condition of Fluid:** **Gas** **Max. Operating Pressure:** **PB 400 bar**	DPRG02 01/02

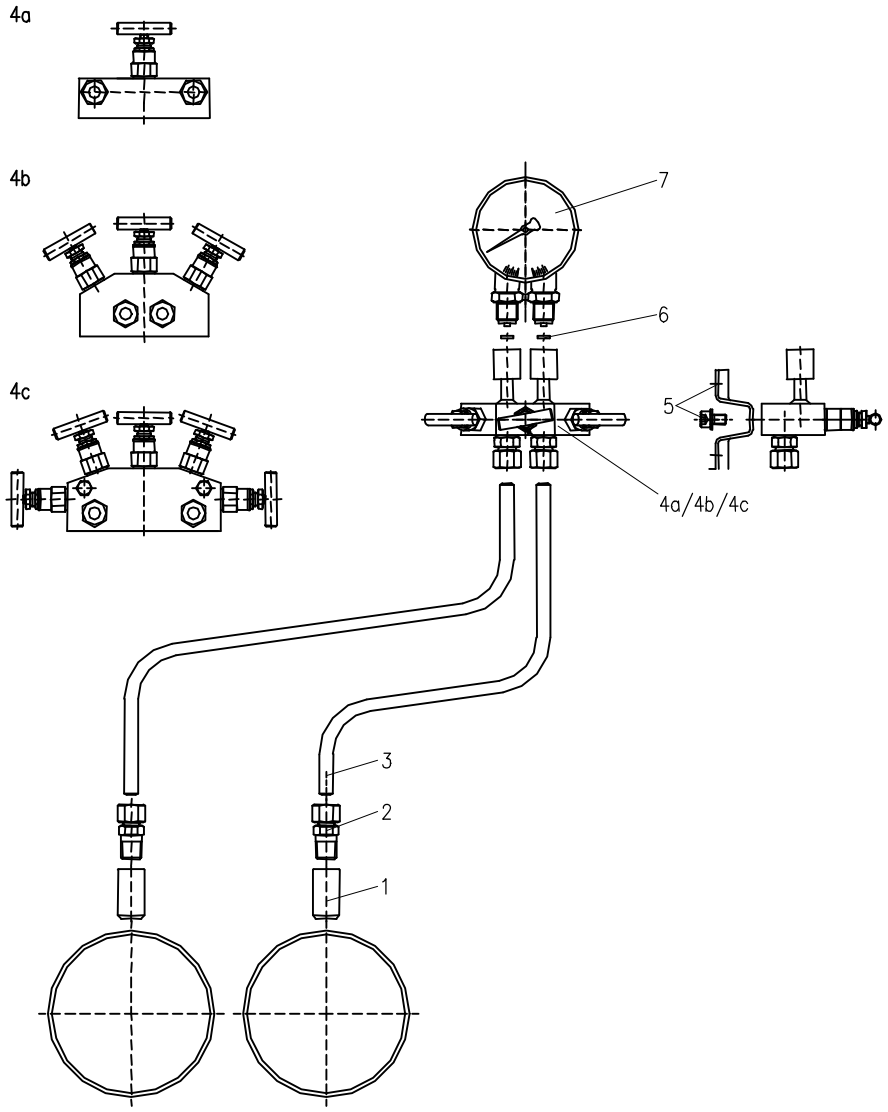

* different material

Pos.	Qty.	Designation	Part no. Steel	Part no. Stainless steel	Remark
1	1	Pressure tap			
2	2	Male connector G 3/8 / tube fitting 12S	510055	520102	
3	2	Impulse line Ø 12			
4a	1	1 valve manifold PN 400 tube fitting 12S / turning nut G 1/2 Distance: 37 mm 54 mm 100 mm	 N342.33.141.01 N342.33.141.02 N342.33.141.03	 N342.33.241.01 N342.33.241.02 N342.33.241.03	
4b	1	3 valve manifold PN 400 tube fitting 12S / turning nut G 1/2 Distance: 37 mm 54 mm 100 mm	 N342.31.141.01 N342.31.141.02 N342.31.141.03	 N342.31.241.01 N342.31.241.02 N342.31.241.03	
4c	1	5 valve manifold PN 400 tube fitting 12S / turning nut G 1/2 Distance: 37 mm 54 mm 100 mm	 N342.32.141.01 N342.32.141.02 N342.32.141.03	 N342.32.241.01 N342.32.241.02 N342.32.241.03	
5	1	Accessory kit consisting of: mounting bracket, screws and washers	S006.42.100.02	S006.42.200.02	
6	1	Sealing washer	S006.03.004/Fe*	S006.03.007	
7	1	Instrument			

© This drawing is the exclusive property of ARMATURENFABRIK FRANZ SCHNEIDER GmbH & Co. KG. Without their consent it may not be reproduced or given to third parties.

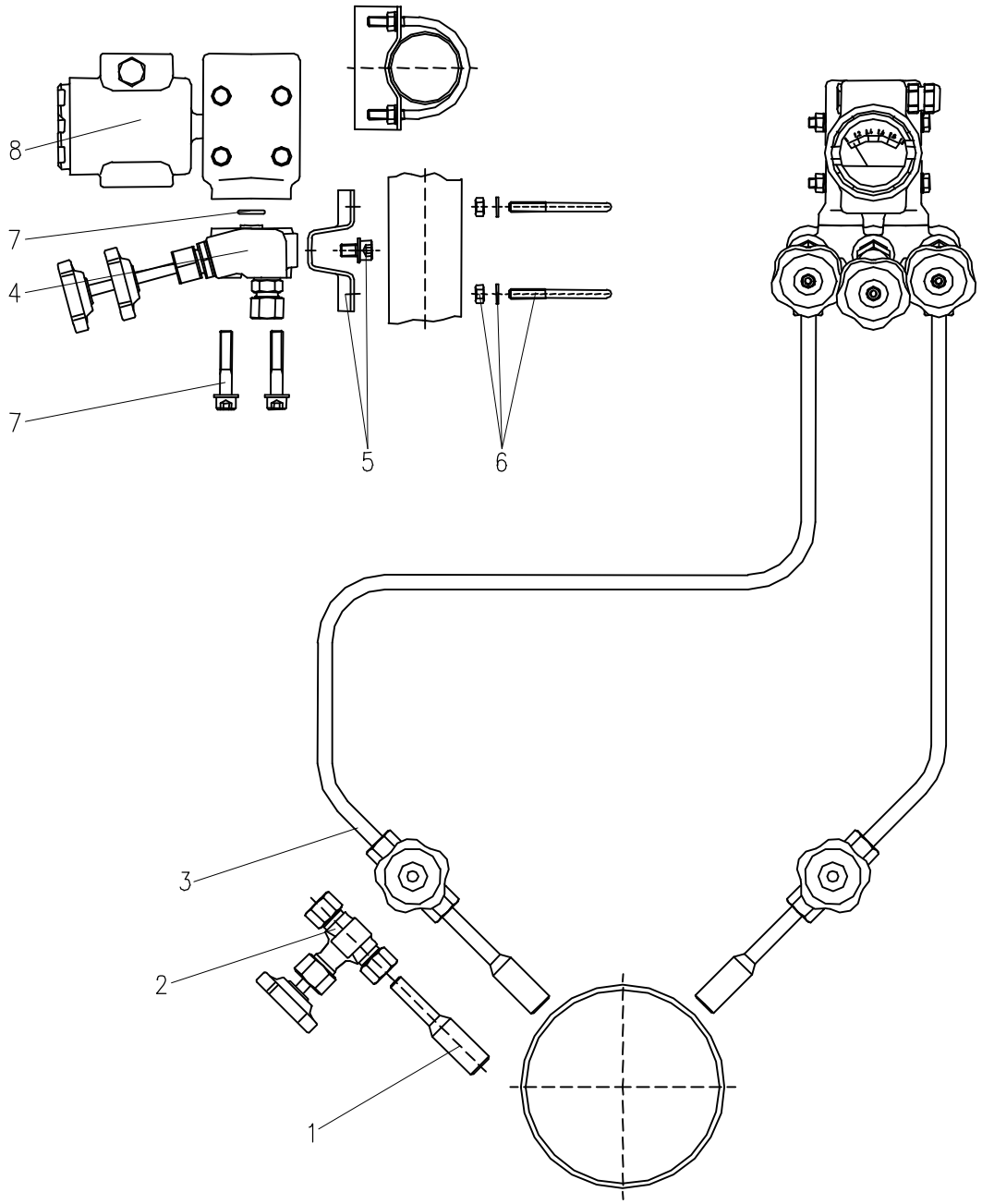

Pos.	Qty.	Designation	Part no. Steel	Part no. Stainless steel	Remark
1	1	Pressure tap			
2	2	Primary isolation valve PN 250 both sides tube fitting 12L	S338.03.150	S338.03.250	
3	2	Impulse line Ø 12			
4	1	3 valve manifold PN 100 inlet: tube fitting 12L	S341.36.103	S341.36.203	
5	1	Accessory kit consisting of: mounting bracket, screws and washers	S006.42.100.02	S006.42.200.02	
6	2	Accessory kit for mounting on 2" NB pipe consisting of: 'U' bolt, washers and nuts	S006.42.105	S006.42.205	
7	1	Accessory kit consisting of: screws, washers and seal rings	catalogue page 8.00 - see appendix A1		
8	1	Instrument			

SCHNEIDER Armaturen	**Hook-up:** **Flow Measurement** **Condition of Fluid:** **Gas** **Max. Operating Pressure:** **PB 160 bar**	DPRG04 01/02

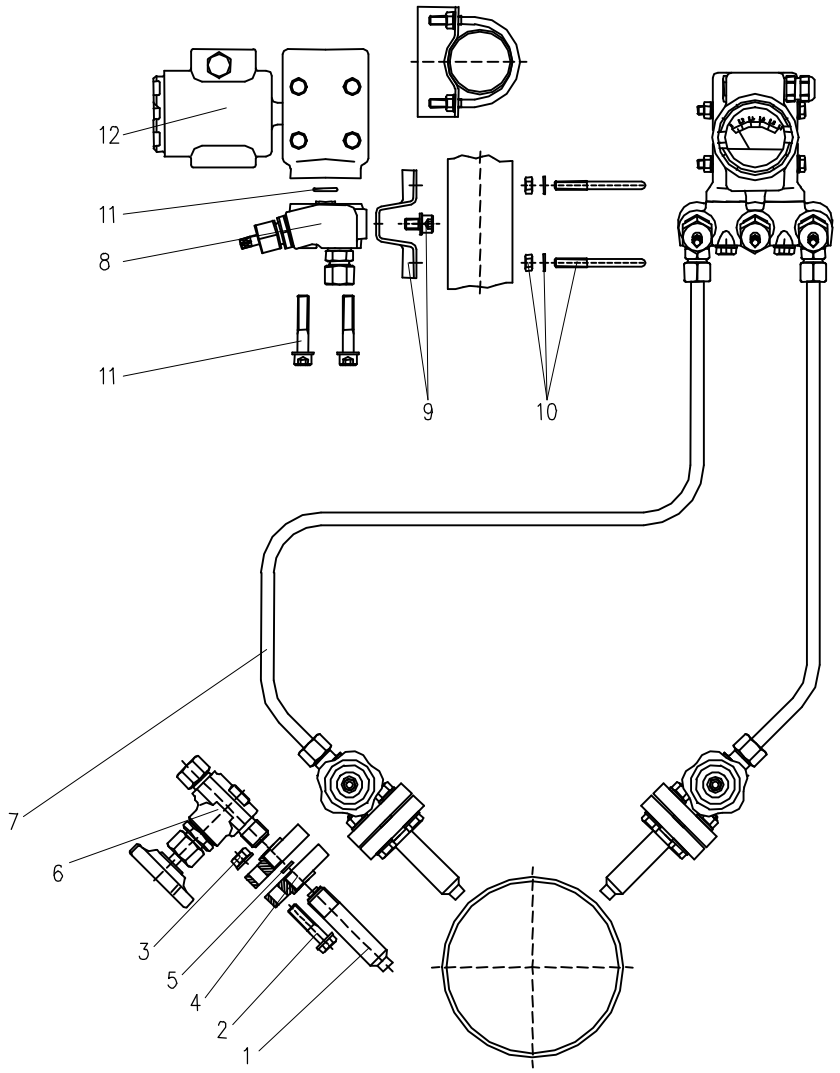

* different material

Pos.	Qty.	Designation	Part no. Steel	Part no. Stainless steel	Remark
1	1	Pressure tap G 1/2, form V, DIN 19 207	6779915	6779916	
2	8	Hexagon head cap screw M 10 x 45	510209	S006.32.210.45	
3	8	Hexagon nut M 10	510034	S006.26.210.17	
4	4	Threaded flange DIN 19 207, G 1/2	S006.21.117	S006.21.217	
5	2	Sealing washer DIN 19 207	S006.23.211/1.4571*	S006.23.211	
6	2	Primary isolation valve PN 160 G 1/2, form R, DIN 19 207 / tube fitting 12S	S350.07.114.06	S350.07.214.06	
7	2	Impulse line Ø 12			
8	1	3 valve manifold PN 400 inlet: tube fitting 12S	S541.36.125	S541.36.225	
9	1	Accessory kit consisting of: mounting bracket, screws and washers	S006.42.100.02	S006.42.200.02	
10	2	Accessory kit for mounting on 2" NB pipe consisting of: 'U' bolt, washers and nuts	S006.42.105	S006.42.205	
11	1	Accessory kit consisting of: screws, washers and seal rings	catalogue page 8.00 - see appendix A1		
12	1	Instrument			

© This drawing is the exclusive property of ARMATURENFABRIK FRANZ SCHNEIDER GmbH & Co. KG. Without their consent it may not be reproduced or given to third parties.

SCHNEIDER Armaturen	**Hook-up:** **Flow Measurement** **Condition of Fluid:** **Gas** **Max. Operating Pressure:** **PB 400 bar**	DPRG05 01/02

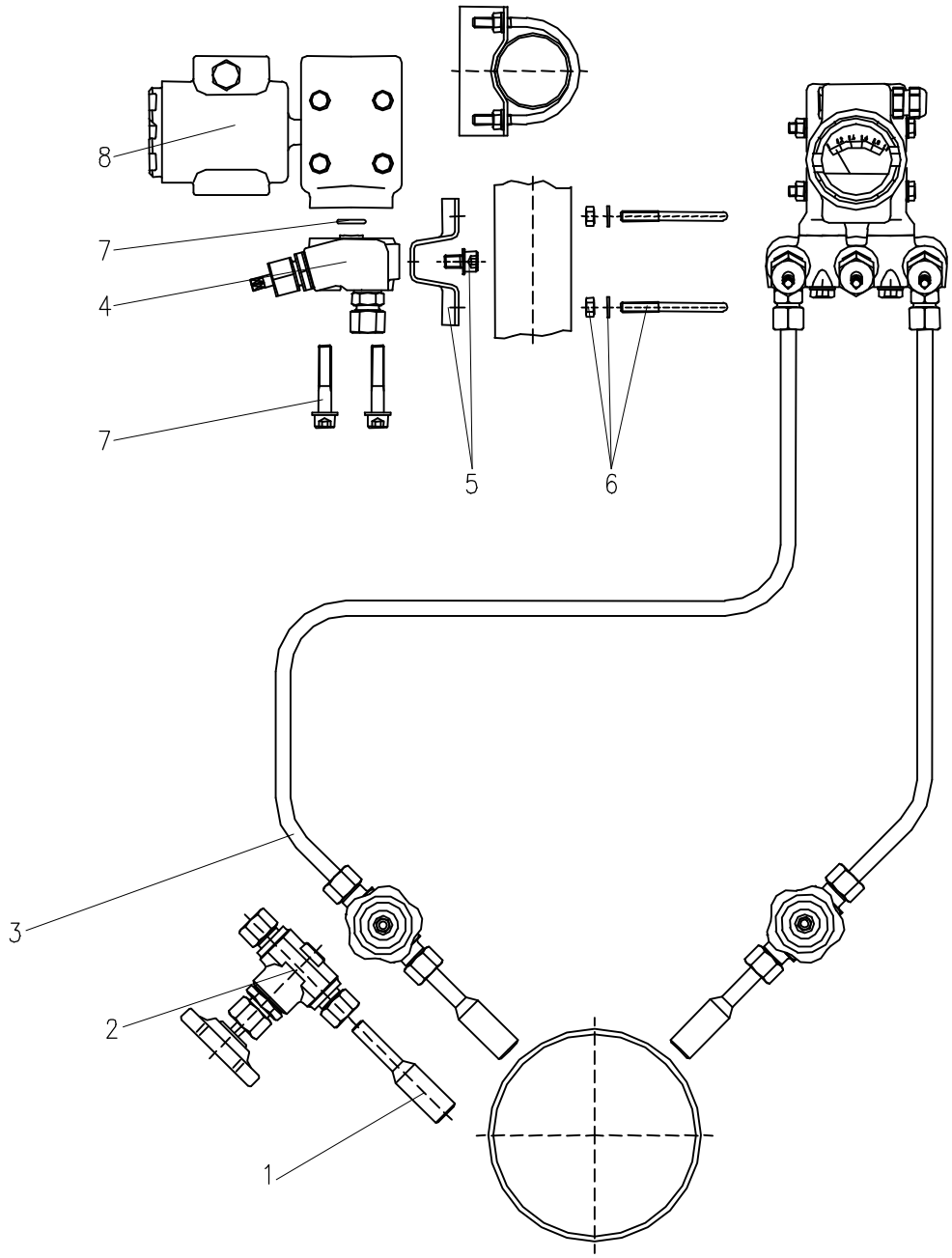

Pos.	Qty.	Designation	Part no. Steel	Part no. Stainless steel	Remark
1	1	Pressure tap			
2	2	Primary isolation valve PN 400 both sides tube fitting 12S	S350.01.114	S350.01.214	
3	2	Impulse line Ø 12			
4	1	3 valve manifold PN 400 inlet: tube fitting 12S	S541.36.125	S541.36.225	
5	1	Accessory kit consisting of: mounting bracket, screws and washers	S006.42.100.02	S006.42.200.02	
6	2	Accessory kit for mounting on 2" NB pipe consisting of: 'U' bolt, washers and nuts	S006.42.105	S006.42.205	
7	1	Accessory kit consisting of: screws, washers and seal rings	catalogue page 8.00 - see appendix A1		
8	1	Instrument			

© This drawing is the exclusive property of ARMATURENFABRIK FRANZ SCHNEIDER GmbH & Co. KG. Without their consent it may not be reproduced or given to third parties.

SCHNEIDER Armaturen	Hook-up:	Flow Measurement	DPRG06
	Condition of Fluid:	Gas	01/02
	Max. Operating Pressure:	PB 420 bar	

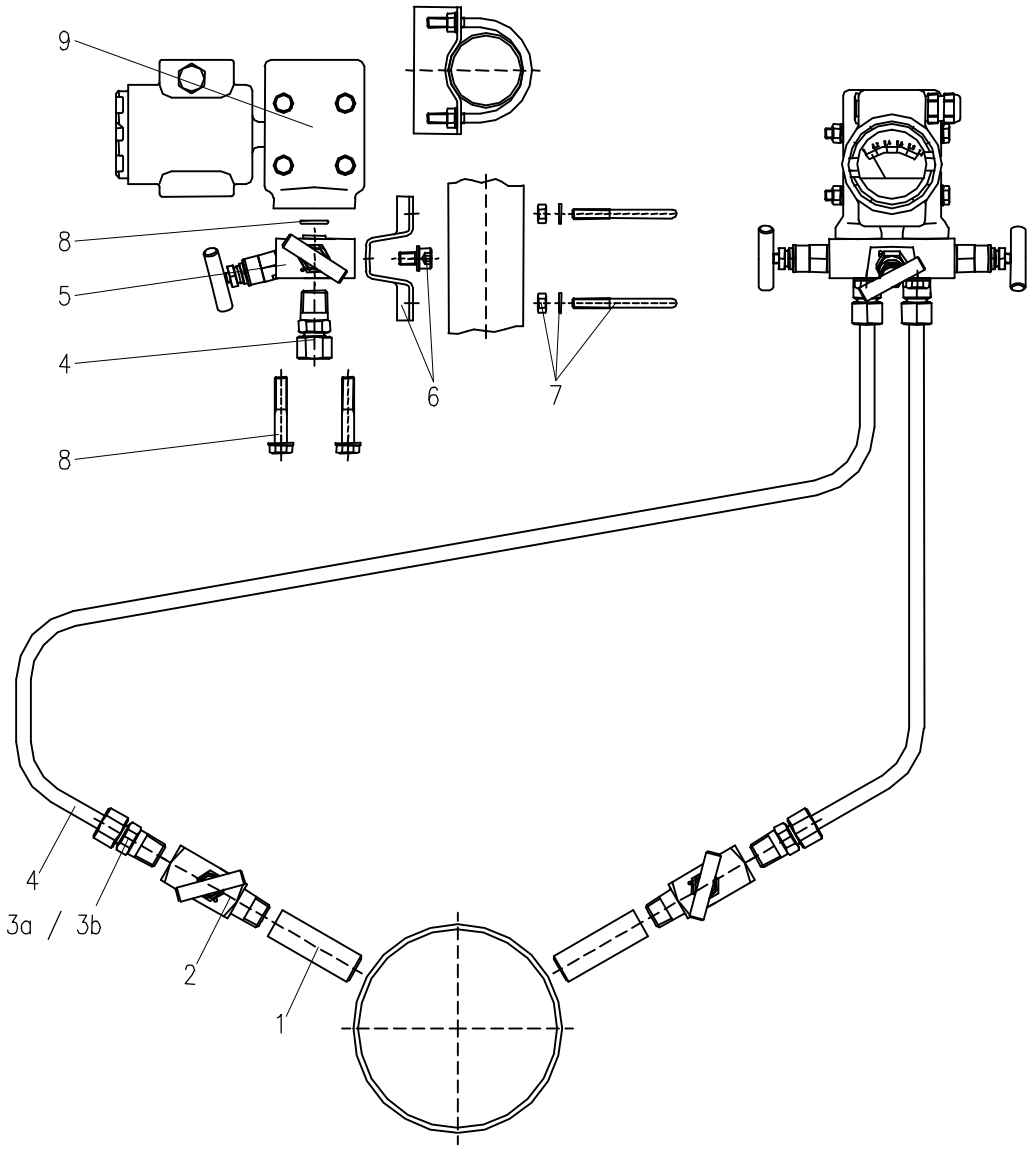

Pos.	Qty.	Designation	Part no. Steel	Part no. Stainless steel	Remark
1	1	Pressure tap			
2	2	Primary isolation valve PN 420 male / female 1/2-14 NPT	N354.07.101.05	N354.07.401.05	
3a	4	Male connector 1/2-14 NPT / tube fitting 12S	S007.53.108.05	S007.53.208.05	
3b	4	Male connector 1/2-14 NPT / twin ferrule compression ends Ø 12	choice of customer		
4	2	Impulse line Ø 12			
5	1	3 valve manifold PN 420 inlet: female 1/2-14 NPT	N542.39.181.01	N542.39.481.01	
6	1	Accessory kit consisting of: mounting bracket, screws and washers	S006.42.100.02	S006.42.200.02	
7	2	Accessory kit for mounting on 2" NB pipe consisting of: 'U' bolt, washers and nuts	S006.42.105	S006.42.205	
8	1	Accessory kit consisting of: screws and seal rings	catalogue page 8.00 - see appendix A1		
9	1	Instrument			

© This drawing is the exclusive property of ARMATURENFABRIK FRANZ SCHNEIDER GmbH & Co. KG. Without their consent it may not be reproduced or given to third parties.

SCHNEIDER Armaturen	**Hook-up:** **Flow Measurement** **Condition of Fluid:** **Gas** **Max. Operating Pressure:** **PB 420 bar**	DPRG07 01/02

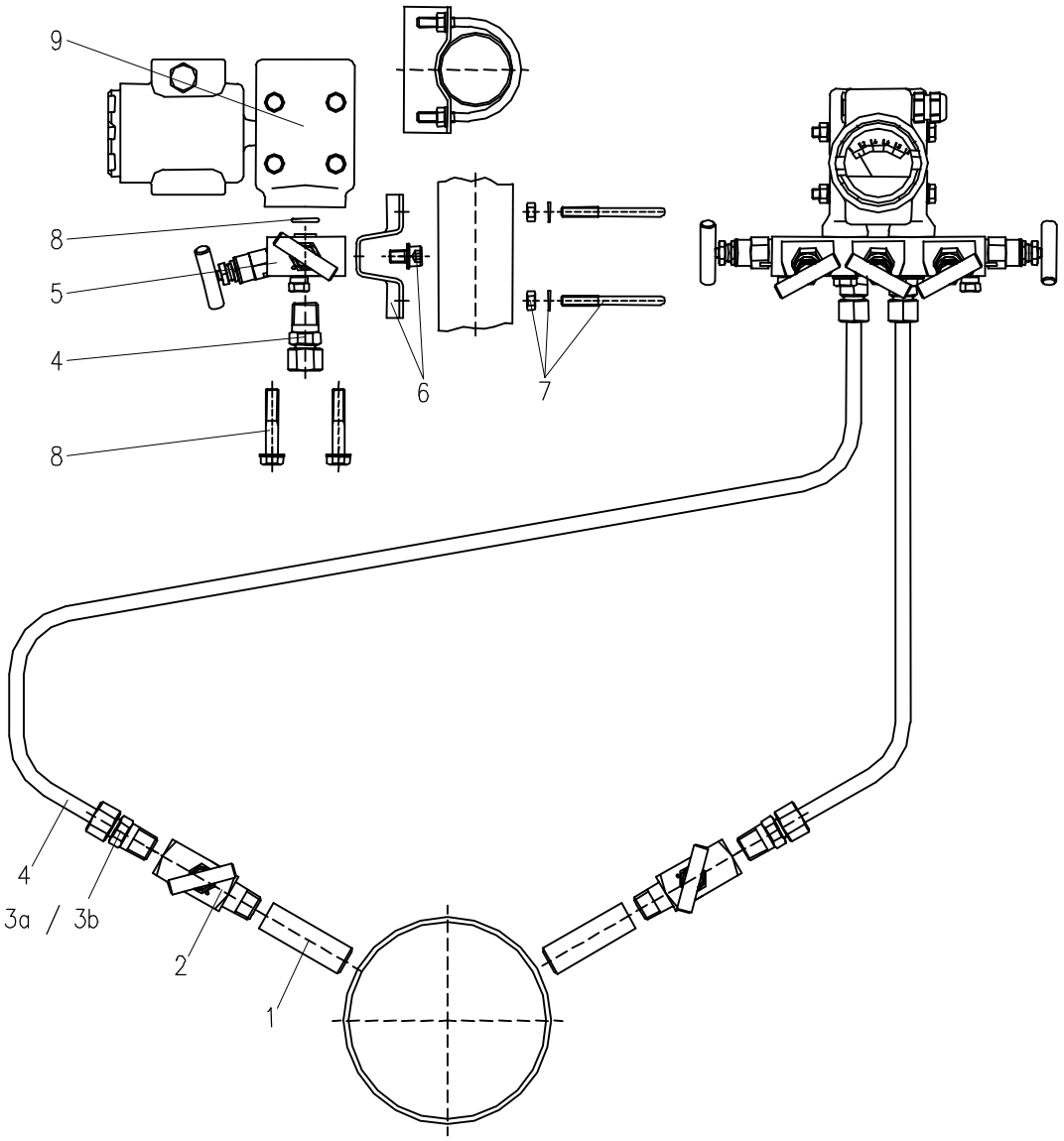

Pos.	Qty.	Designation	Part no. Steel	Part no. Stainless steel	Remark
1	1	Pressure tap			
2	2	Primary isolation valve PN 420 male / female 1/2-14 NPT	N354.07.101.05	N354.07.401.05	
3a	4	Male connector 1/2-14 NPT / tube fitting 12S	S007.53.108.05	S007.53.208.05	
3b	4	Male connector 1/2-14 NPT / twin ferrule compression ends Ø 12	choice of customer		
4	2	Impulse line Ø 12			
5	1	5 valve manifold PN 420 inlet: female 1/2-14 NPT	N542.48.180.01	N542.48.480.01	
6	1	Accessory kit consisting of: mounting bracket, screws and washers	S006.42.100.02	S006.42.200.02	
7	2	Accessory kit for mounting on 2" NB pipe consisting of: 'U' bolt, washers and nuts	S006.42.105	S006.42.205	
8	1	Accessory kit consisting of: screws and seal rings	catalogue page 8.00 - see appendix A1		
9	1	Instrument			

© This drawing is the exclusive property of ARMATURENFABRIK FRANZ SCHNEIDER GmbH & Co. KG. Without their consent it may not be reproduced or given to third parties.

SCHNEIDER Armaturen	**Hook-up:** **Flow Measurement** **Condition of Fluid:** **Gas** **Max. Operating Pressure:** **PB 420 bar**	DPRG08 01/02

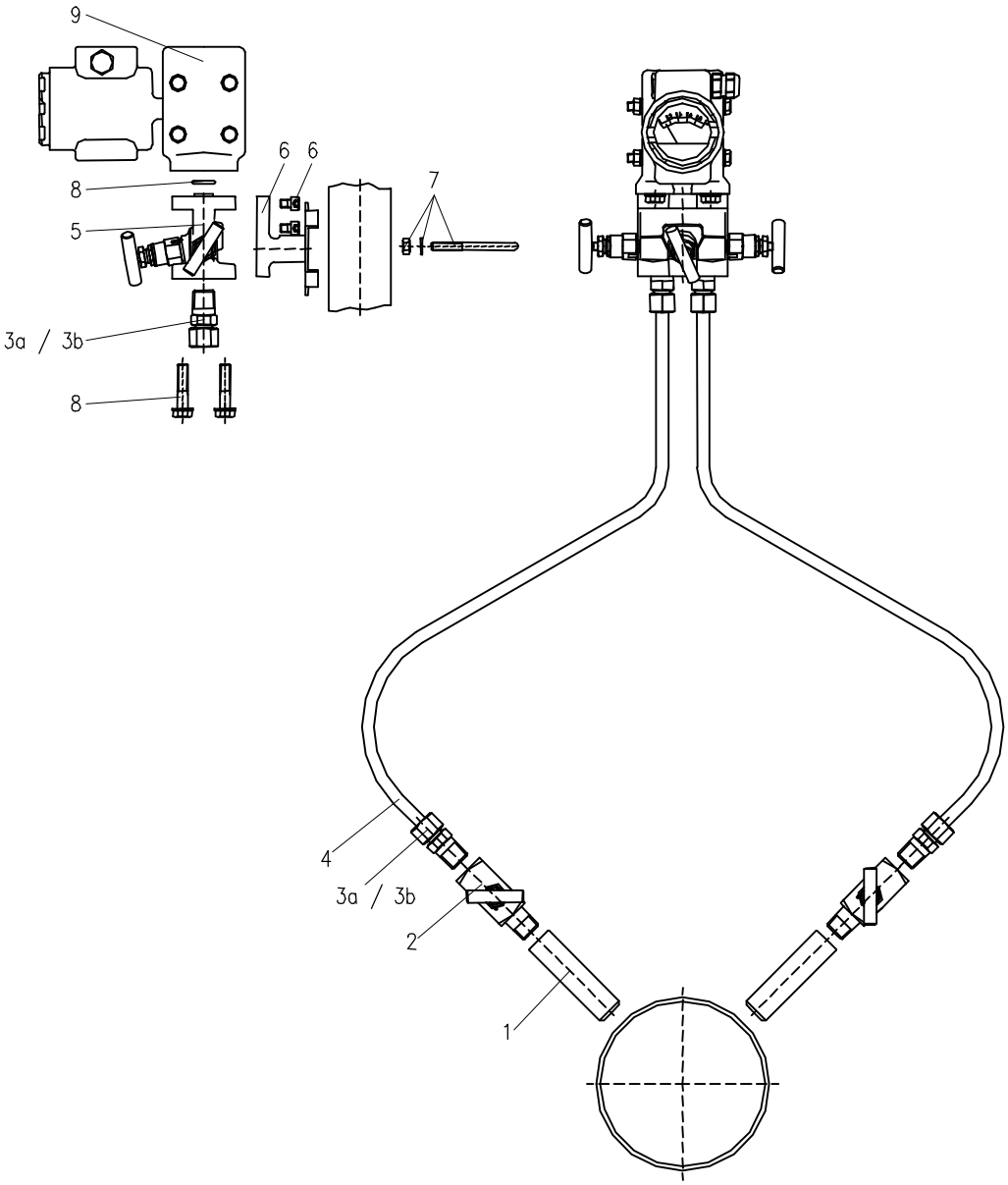

* different material

Pos.	Qty.	Designation	Part no. Steel	Part no. Stainless steel	Remark
1	1	Pressure tap			
2	2	Primary isolation valve PN 420 male / female 1/2-14 NPT	N354.07.101.05	N354.07.401.05	
3a	4	Male connector 1/2-14 NPT / tube fitting 12S	S007.53.108.05	S007.53.208.05	
3b	4	Male connector 1/2-14 NPT / twin ferrule compression ends Ø 12	choice of customer		
4	2	Impulse line Ø 12			
5	1	3 valve manifold PN 420 inlet: female 1/2-14 NPT	N542.46.181.01	N542.46.481.01	
6	1	Accessory kit consisting of: mounting bracket and socket head cap screws M 8 x 10	S006.12.216.60/A2*	S006.12.216.60	
7	1	Accessory kit consisting of: 'U' bolt, nuts and washers	S006.42.105	S006.42.205	
8	1	Accessory kit consisting of: screws and seal rings	catalogue page 8.00 - see appendix A1		
9	1	Instrument			

© This drawing is the exclusive property of ARMATURENFABRIK FRANZ SCHNEIDER GmbH & Co. KG. Without their consent it may not be reproduced or given to third parties.

SCHNEIDER Armaturen	Hook-up: **Flow Measurement** Condition of Fluid: **Gas** Max. Operating Pressure: **PB 420 bar**	DPRG09 01/02

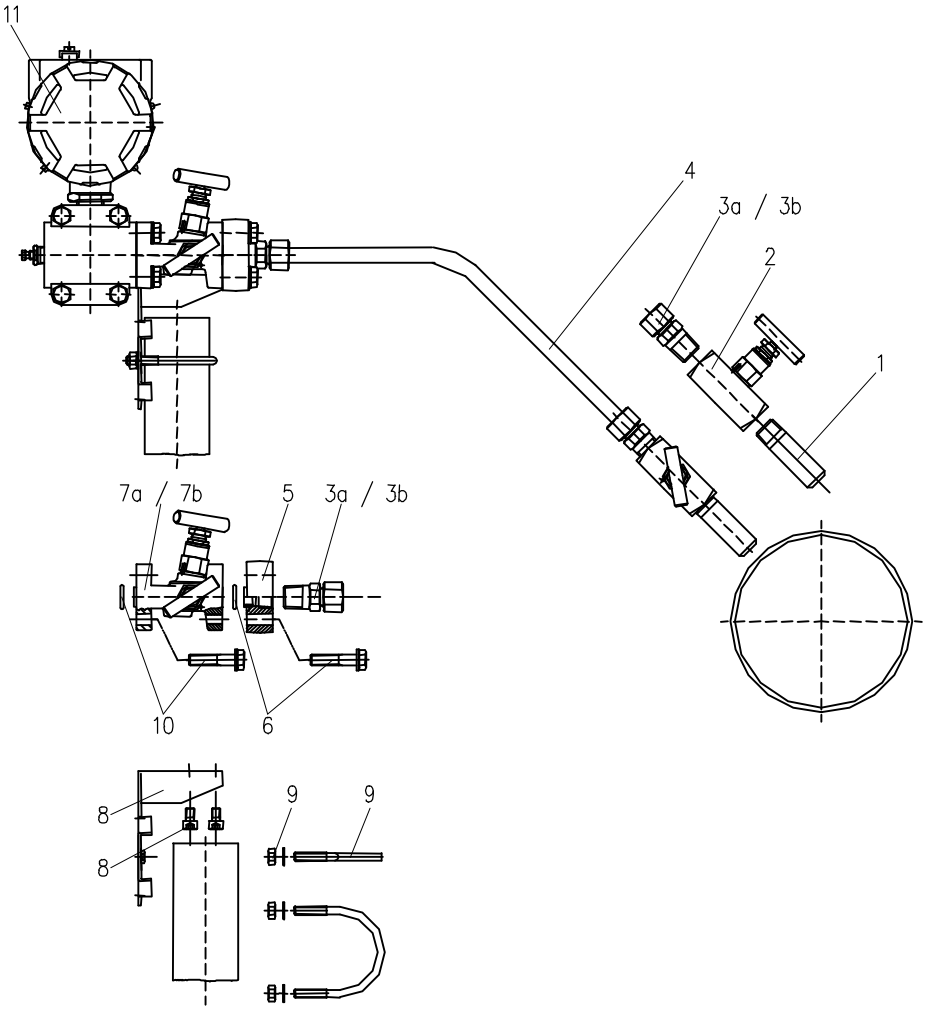

* different material

Pos.	Qty.	Designation	Part no. Steel	Part no. Stainless steel	Remark
1	2	Pressure tap			
2	2	Primary isolation valve PN 420 female / female 1/2-14 NPT	N354.03.101.05	N354.03.401.05	
3a	4	Male connector 1/2-14 NPT / tube fitting 12S	S007.53.108.05	S007.53.208.05	
3b	4	Male connector 1/2-14 NPT / twin ferrule compression ends Ø 12	choice of customer		
4	2	Impulse line Ø 12			
5	2	Oval flange, female 1/2-14 NPT	S006.19.156.22	S006.19.456.22	
6	1	Accessory kit consisting of: screws and seal rings	catalogue page 8.00 - see appendix A1		
7a	1	3 valve manifold PN 420 inlet: DIN 19 213-A with 7/16-20 UNF thread test / vent: female 1/4-18 NPT	N542.46.190.01	N542.46.490.01	
7b	1	3 valve manifold PN 420 inlet: DIN 19 213-A with 7/16-20 UNF thread without test connection	N542.46.191.01	N542.46.491.01	
8	1	Accessory kit consisting of: mounting bracket and socket head cap screws M 8 x 10	S006.12.216.61/A2*	S006.12.216.61	
9	1	Accessory kit consisting of: 'U' bolt, nuts and washers	S006.42.105	S006.42.205	
10	1	Accessory kit consisting of: screws and seal rings	catalogue page - see appendix A1		
11	1	Instrument			

© This drawing is the exclusive property of ARMATURENFABRIK FRANZ SCHNEIDER GmbH & Co. KG. Without their consent it may not be reproduced or given to third parties.

SCHNEIDER Armaturen	**Hook-up:** **Flow Measurement** **Condition of Fluid:** **Gas** **Max. Operating Pressure:** **PB 420 bar**	DPRG10 01/02

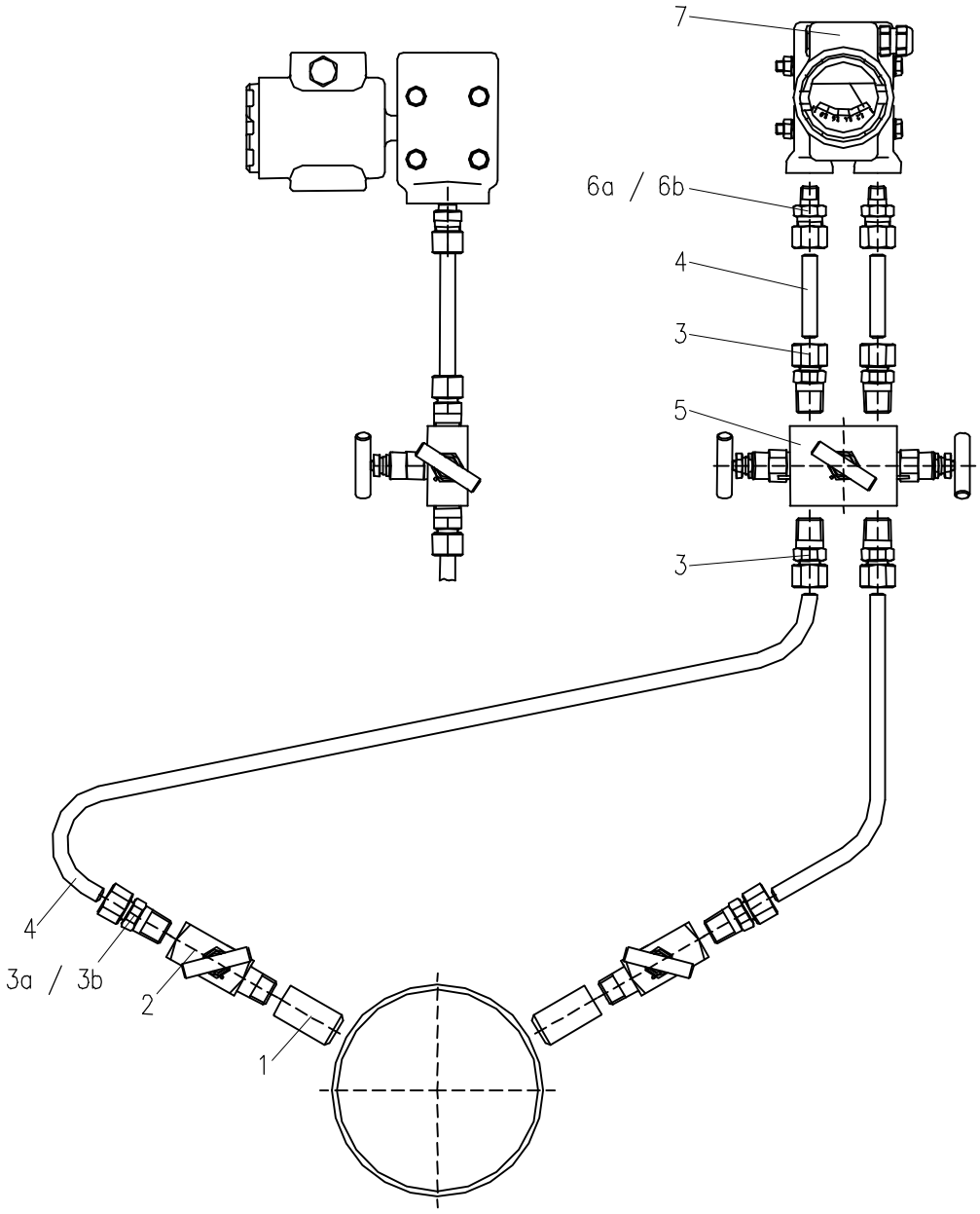

Pos.	Qty.	Designation	Part no. Steel	Part no. Stainless steel	Remark
1	1	Pressure tap			
2	2	Primary isolation valve PN 420 male / female 1/2-14 NPT	N354.07.101.05	N354.07.401.05	
3a	6	Male connector 1/2-14 NPT / tube fitting 12S	S007.53.108.05	S007.53.208.05	
3b	6	Male connector 1/2-14 NPT / twin ferrule compression ends Ø 12	choice of customer		
4	2	Impulse line Ø 12			
5	1	3 valve manifold PN 420 both sides female 1/2-14 NPT	N342.41.184.01	N342.41.484.01	
6a	2	Male connector 1/4-18 NPT / tube fitting 12S	S007.53.108.03	S007.53.208.03	
6b	2	Male connector 1/4-18 NPT / twin ferrule compression ends Ø 12	choice of customer		
7	1	Instrument			

© This drawing is the exclusive property of ARMATURENFABRIK FRANZ SCHNEIDER GmbH & Co. KG. Without their consent it may not be reproduced or given to third parties.

SCHNEIDER Armaturen	**Hook-up:** **Flow Measurement** **Condition of Fluid:** **Gas** **Max. Operating Pressure:** **PB 420 bar**	DPRG11 01/02

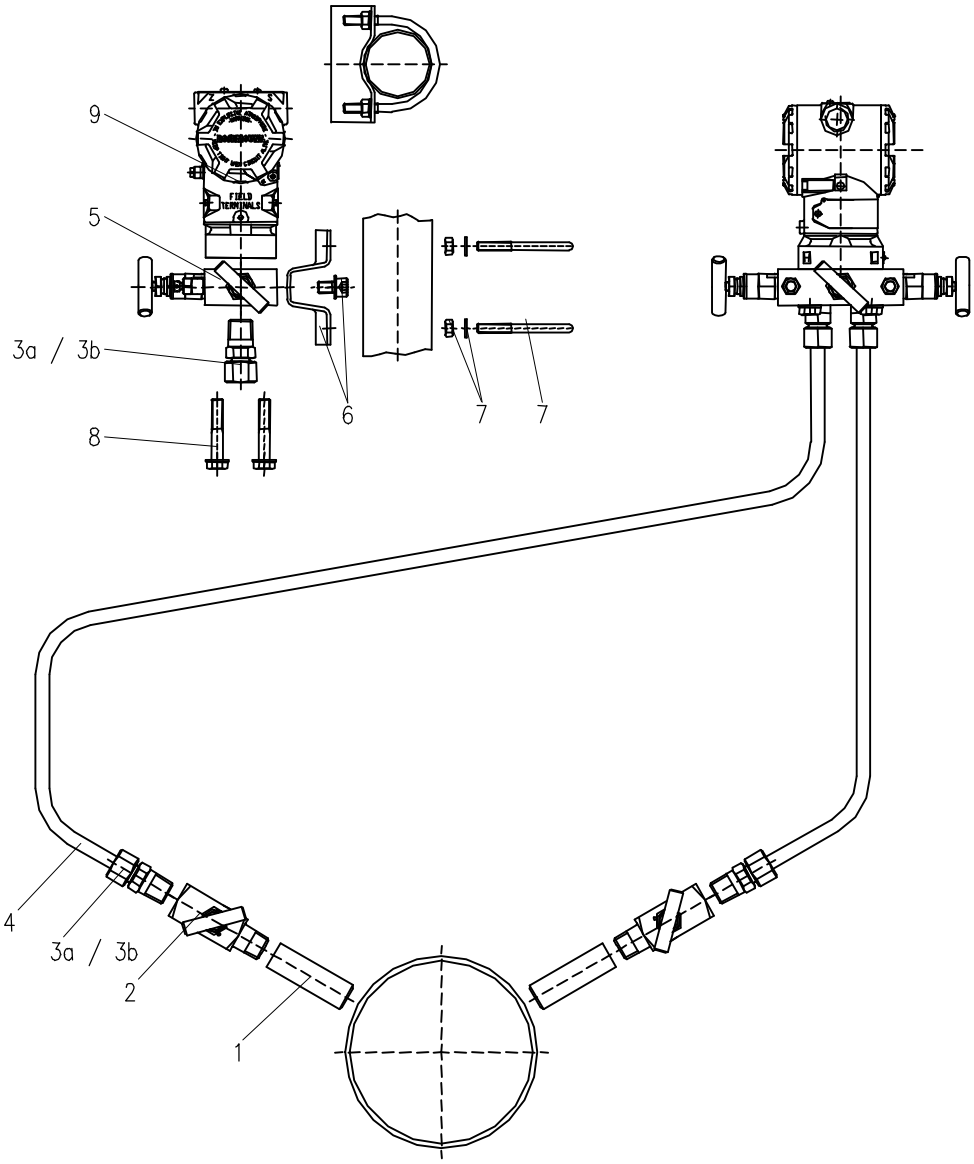

* different material

Pos.	Qty.	Designation	Part no. Stainless steel	Remark
1	1	Pressure tap		
2	2	Primary isolation valve PN 420 male / female 1/2-14 NPT	N354.07.401.05	
3a	4	Male connector 1/2-14 NPT / tube fitting 12S	S007.53.208.05	
3b	4	Male connector 1/2-14 NPT / twin ferrule compression ends Ø 12	choice of customer	
4	2	Impulse line Ø 12		
5	1	3 valve manifold PN 420 inlet: female 1/2-14 NPT	N542.39.492.02	
6	1	Accessory kit consisting of: mounting bracket, screws and washers	S006.42.200.02	
7	2	Accessory kit for mounting on 2" NB pipe consisting of: 'U' bolt, washers and nuts	S006.42.205	
8	4	Hexagon head cap screw 7/16-20 UNF x 2"	S006.33.166.20/St*	
9	1	Instrument incl. seal ring	Fisher Rosemount Type 3051	

© This drawing is the exclusive property of ARMATURENFABRIK FRANZ SCHNEIDER GmbH & Co. KG. Without their consent it may not be reproduced or given to third parties.

SCHNEIDER Armaturen	**Hook-up:** **Flow Measurement** **Condition of Fluid:** **Liquid** **Max. Operating Pressure:** **PB 100 bar**	DPRL01 01/02

© This drawing is the exclusive property of ARMATURENFABRIK FRANZ SCHNEIDER GmbH & Co. KG. Without their consent it may not be reproduced or given to third parties.

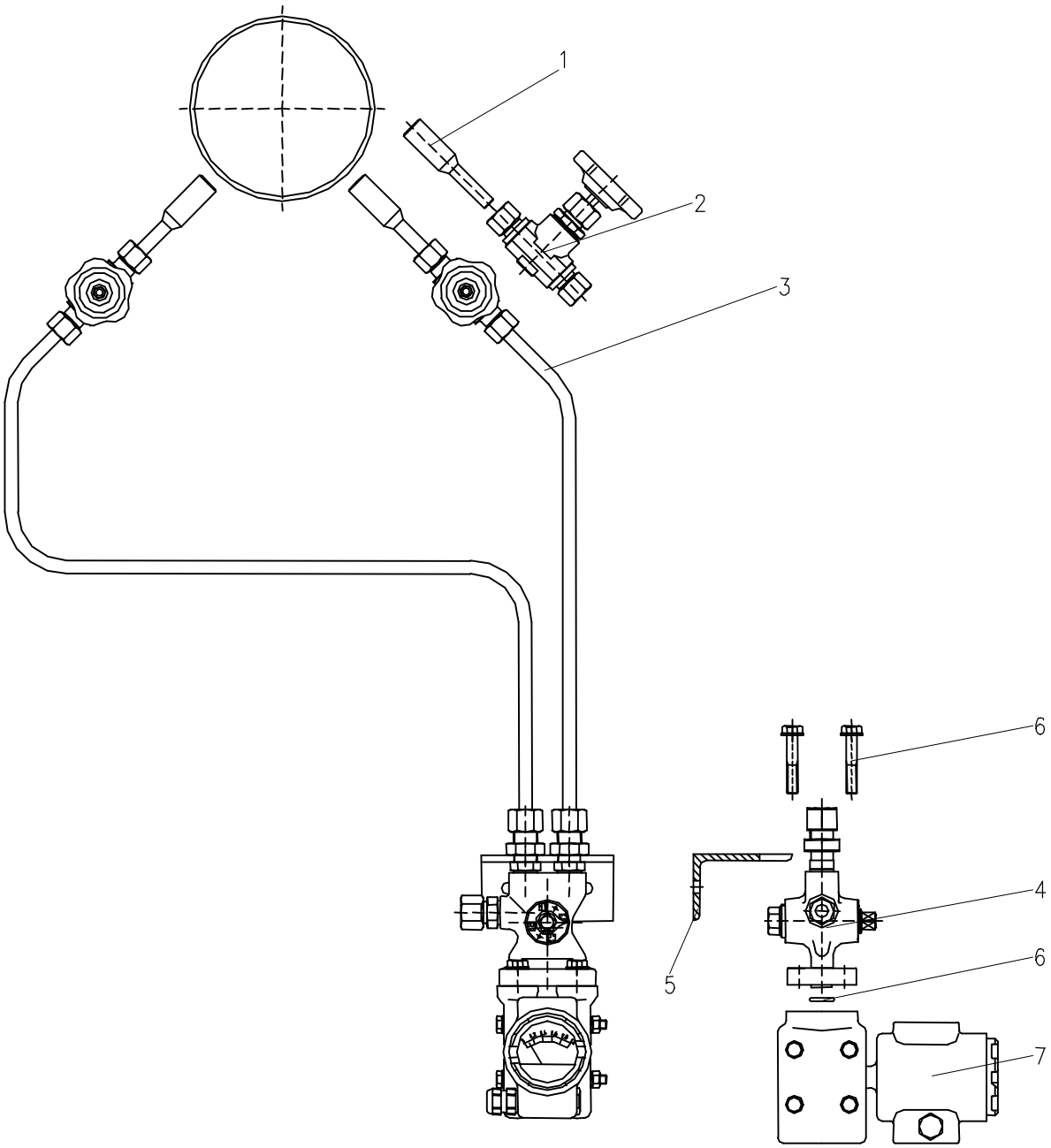

Pos.	Qty.	Designation	Part no. Steel	Part no. Stainless steel	Remark
1	1	Pressure tap			
2	2	Primary isolation valve PN 250 both sides tube fitting 12L	S350.01.104	S350.01.204	
3	2	Impulse line Ø 12			
4	1	Multi-way cock PN 100 bulkhead male connection 12L	S345.06.102.02	S345.06.202.02	
5	1	Mounting bracket	S006.42.103.04	S006.42.203.04	
6	1	Accessory kit consisting of: screws, washers and seal rings	catalogue page 8.00 - see appendix A1		
7	1	Instrument			

SCHNEIDER Armaturen	Hook-up: **Flow Measurement** Condition of Fluid: **Liquid** Max. Operating Pressure: **PB 100 bar**	DPRL02 01/02

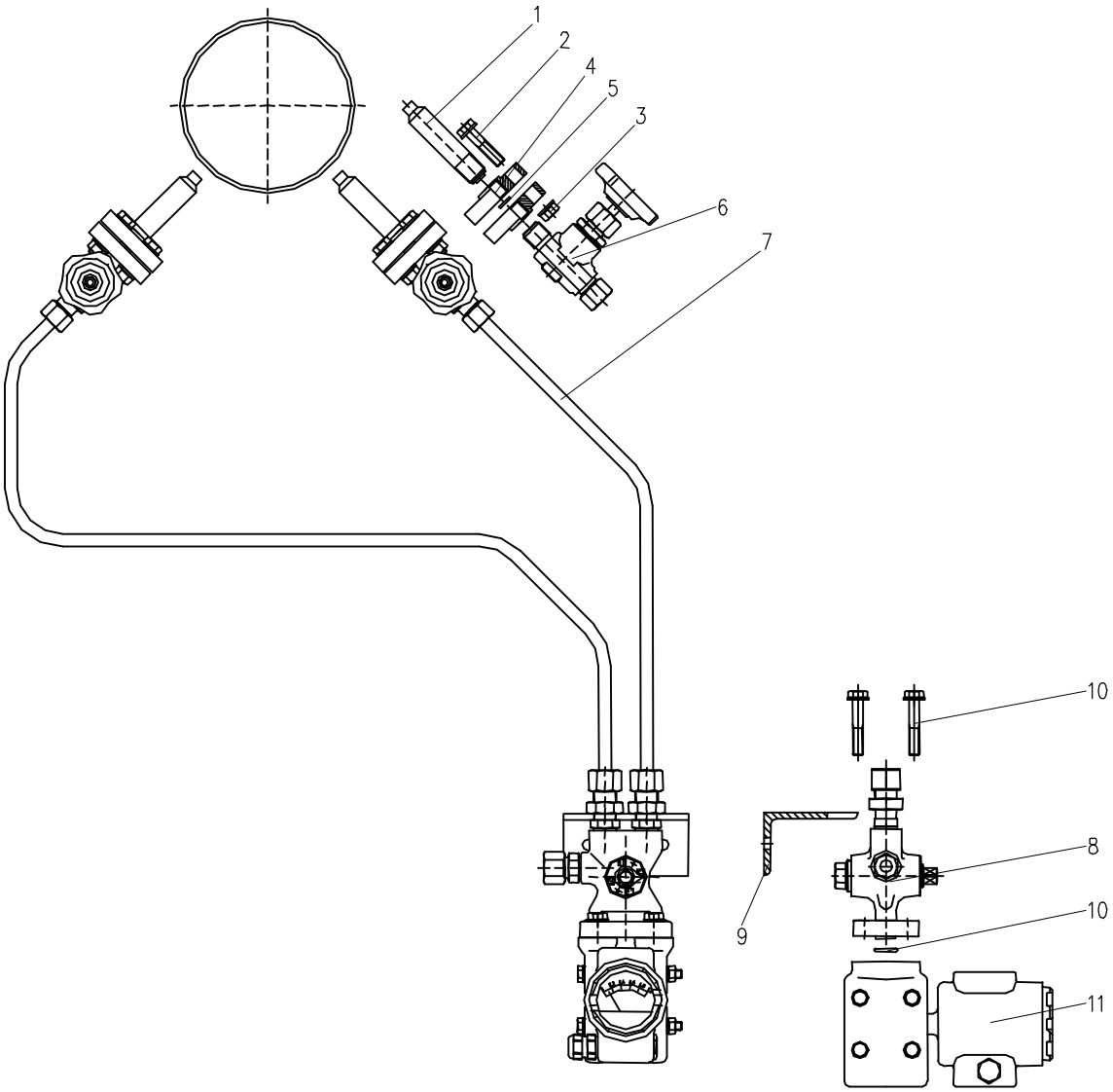

* different material

Pos.	Qty.	Designation	Part no. Steel	Part no. Stainless steel	Remark
1	1	Pressure tap G 1/2, form V, DIN 19 207	6779915	6779916	
2	8	Hexagon head cap screw M 10 x 45	510209	S006.32.210.45	
3	8	Hexagon nut M 10	510034	S006.26.210.17	
4	4	Threaded flange DIN 19 207, G 1/2	S006.21.117	S006.21.217	
5	2	Sealing washer DIN 19 207	S006.23.211/1.4571*	S006.23.211	
6	2	Primary isolation valve PN 160 G 1/2, form R, DIN 19 207 / tube fitting 12S	S350.07.114.06	S350.07.214.06	
7	2	Impulse line Ø 12			
8	1	Multi-way cock PN 100 bulkhead male connection 12L	S345.06.102.02	S345.06.202.02	
9	1	Mounting bracket	S006.42.103.04	S006.42.203.04	
10	1	Accessory kit consisting of: screws, washers and seal rings	catalogue page 8.00 - see appendix A1		
11	1	Instrument			

© This drawing is the exclusive property of ARMATURENFABRIK FRANZ SCHNEIDER GmbH & Co. KG. Without their consent it may not be reproduced or given to third parties.

SCHNEIDER Armaturen	Hook-up: **Flow Measurement** Condition of Fluid: **Liquid** Max. Operating Pressure: **PB 100 bar**	DPRL03 01/02

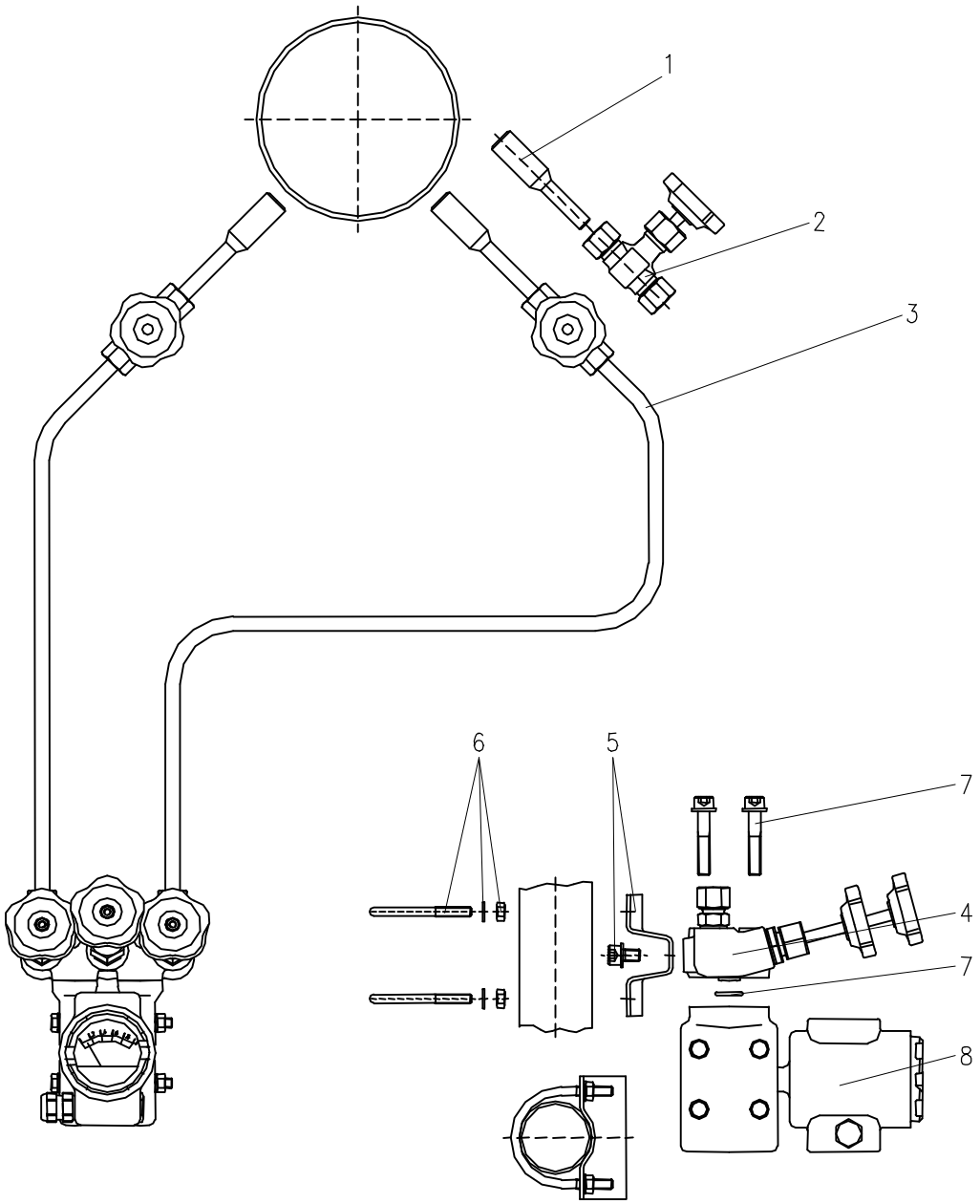

Pos.	Qty.	Designation	Part no. Steel	Part no. Stainless steel	Remark
1	1	Pressure tap			
2	2	Primary isolation valve PN 250 both sides tube fitting 12L	S338.03.150	S338.03.250	
3	2	Impulse line Ø 12			
4	1	3 valve manifold PN 100 inlet: tube fitting 12L	S341.36.103	S341.36.203	
5	1	Accessory kit consisting of: mounting bracket, screws and washers	S006.42.100.02	S006.42.200.02	
6	2	Accessory kit for mounting on 2" NB pipe consisting of: 'U' bolt, washers and nuts	S006.42.105	S006.42.205	
7	1	Accessory kit consisting of: screws, washers and seal rings	catalogue page 8.00 - see appendix A1		
8	1	Instrument			

© This drawing is the exclusive property of ARMATURENFABRIK FRANZ SCHNEIDER GmbH & Co. KG. Without their consent it may not be reproduced or given to third parties.

SCHNEIDER Armaturen	**Hook-up:** **Flow Measurement** **Condition of Fluid:** **Liquid** **Max. Operating Pressure:** **PB 160 bar**	DPRL04 01/02

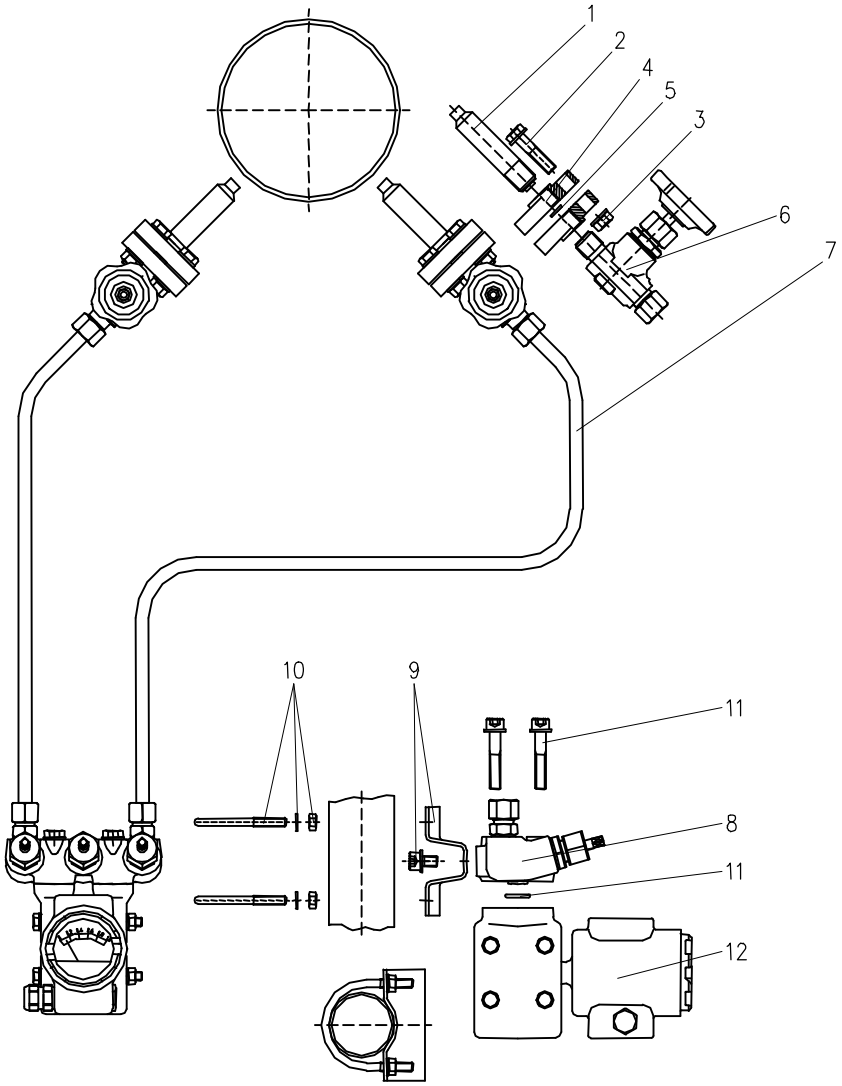

* different material

Pos.	Qty.	Designation	Part no. Steel	Part no. Stainless steel	Remark
1	1	Pressure tap G 1/2, form V, DIN 19 207	6779915	6779916	
2	8	Hexagon head cap screw M 10 x 45	510209	S006.32.210.45	
3	8	Hexagon nut M 10	510034	S006.26.210.17	
4	4	Threaded flange DIN 19 207, G 1/2	S006.21.117	S006.21.217	
5	2	Sealing washer DIN 19 207	S006.23.211/1.4571*	S006.23.211	
6	2	Primary isolation valve PN 160 G 1/2, form R, DIN 19 207 / tube fitting 12S	S350.07.114.06	S350.07.214.06	
7	2	Impulse line Ø 12			
8	1	3 valve manifold PN 400 inlet: tube fitting 12S	S541.36.125	S541.36.225	
9	1	Accessory kit consisting of: mounting bracket, screws and washers	S006.42.100.02	S006.42.200.02	
10	2	Accessory kit for mounting on 2" NB pipe consisting of: 'U' bolt, washers and nuts	S006.42.105	S006.42.205	
11	1	Accessory kit consisting of: screws, washers and seal rings	catalogue page 8.00 - see appendix A1		
12	1	Instrument			

© This drawing is the exclusive property of ARMATURENFABRIK FRANZ SCHNEIDER GmbH & Co. KG. Without their consent it may not be reproduced or given to third parties.

SCHNEIDER Armaturen	Hook-up: **Flow Measurement** Condition of Fluid: **Liquid** Max. Operating Pressure: **PB 400 bar**	DPRL05 01/02

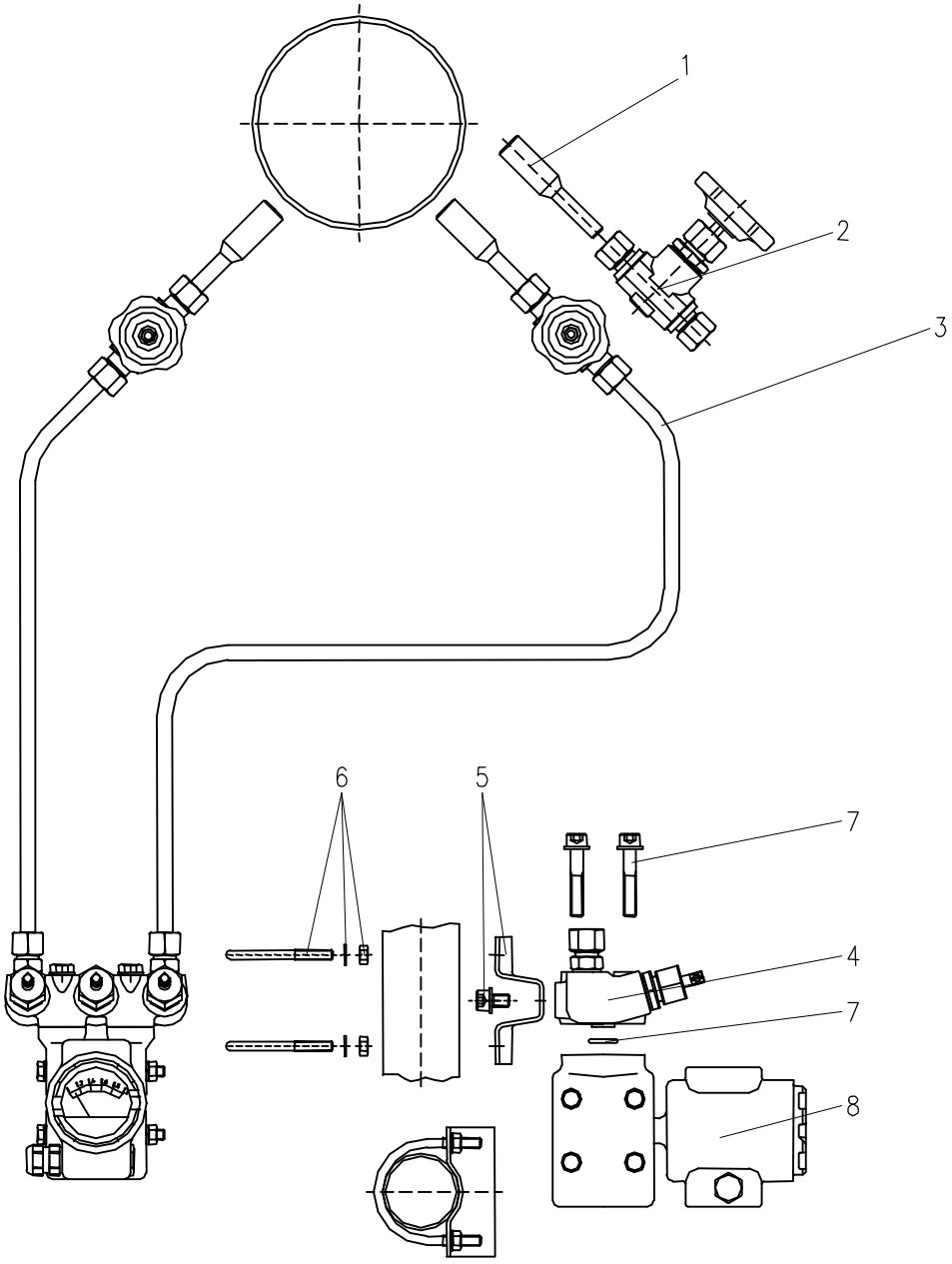

Pos.	Qty.	Designation	Part no. Steel	Part no. Stainless steel	Remark
1	1	Pressure tap			
2	2	Primary isolation valve PN 400 both sides tube fitting 12S	S350.01.114	S350.01.214	
3	2	Impulse line Ø 12			
4	1	3 valve manifold PN 400 inlet: tube fitting 12S	S541.36.125	S541.36.225	
5	1	Accessory kit consisting of: mounting bracket, screws and washers	S006.42.100.02	S006.42.200.02	
6	2	Accessory kit for mounting on 2" NB pipe consisting of: 'U' bolt, washers and nuts	S006.42.105	S006.42.205	
7	1	Accessory kit consisting of: screws, washers and seal rings	catalogue page 8.00 - see appendix A1		
8	1	Instrument			

© This drawing is the exclusive property of ARMATURENFABRIK FRANZ SCHNEIDER GmbH & Co. KG. Without their consent it may not be reproduced or given to third parties.

SCHNEIDER Armaturen	**Hook-up:** **Flow Measurement** **Condition of Fluid:** **Liquid** **Max. Operating Pressure:** **PB 400 bar**	DPRL06 01/02

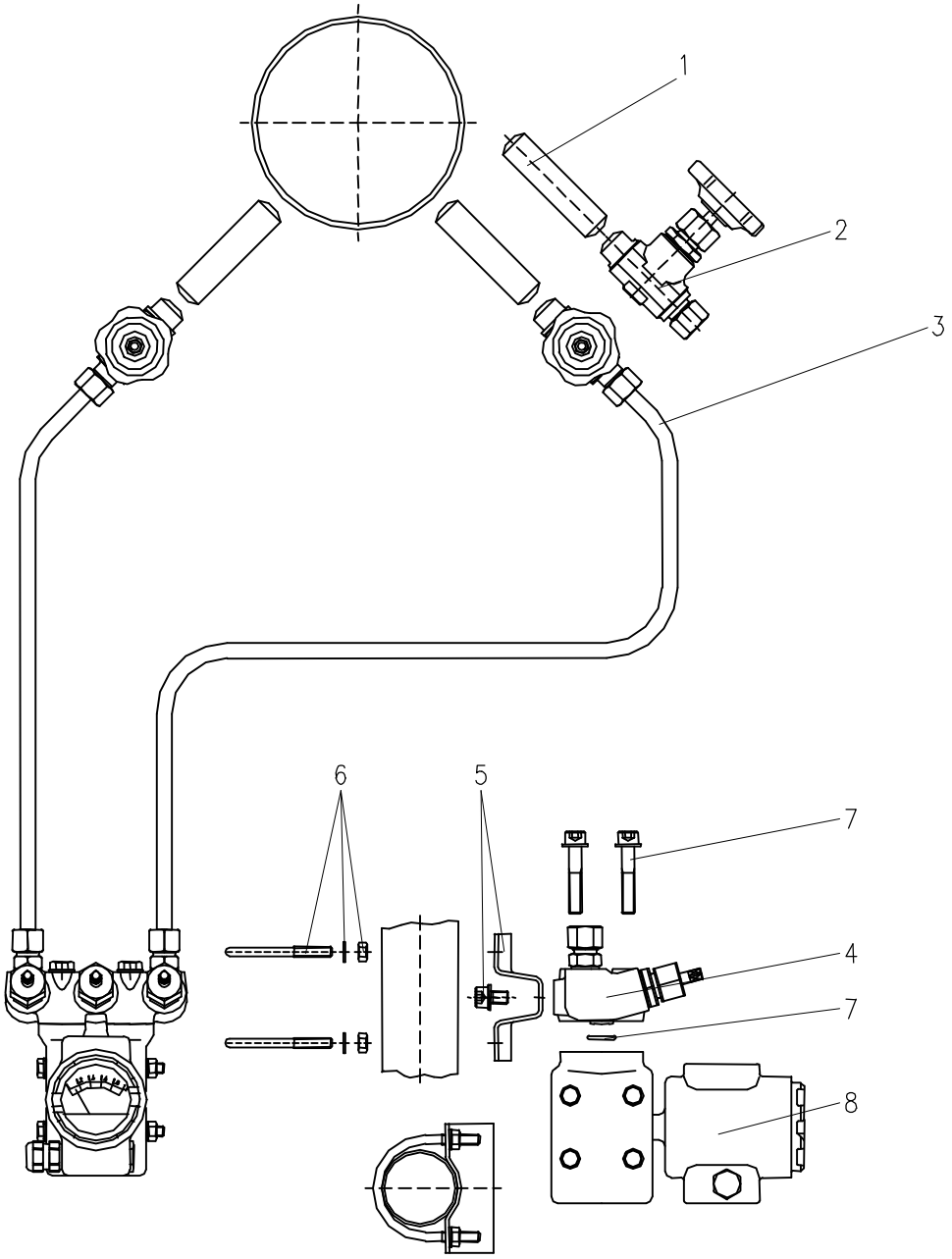

Pos.	Qty.	Designation	Part no. Steel	Part no. Stainless steel	Remark
1	1	Pressure tap outlet: weld end Ø 24 x 7,1	S007.56.602.01	S007.56.202.01	
2	2	Primary isolation valve PN 400 Ø 24 x 7,1 / tube fitting 12S	S350.05.130.09	S350.05.230.09	
3	2	Impulse line Ø 12			
4	1	3 valve manifold PN 400 inlet: tube fitting 12S	S541.36.125	S541.36.225	
5	1	Accesscory kit consisting of: mounting bracket, screws and washers	S006.42.100.02	S006.42.200.02	
6	2	Accessory kit for mounting on 2" NB pipe consisting of: 'U' bolt, washers and nuts	S006.42.105	S006.42.205	
7	1	Accessory kit consisting of: screws, washers and seal rings	catalogue page 8.00 - see appendix A1		
8	1	Instrument			

© This drawing is the exclusive property of ARMATURENFABRIK FRANZ SCHNEIDER GmbH & Co. KG. Without their consent it may not be reproduced or given to third parties.

SCHNEIDER Armaturen	**Hook-up:** **Flow Measurement** **Condition of Fluid:** **Liquid** **Max. Operating Pressure:** **PB 160 bar**	DPRL07 01/02

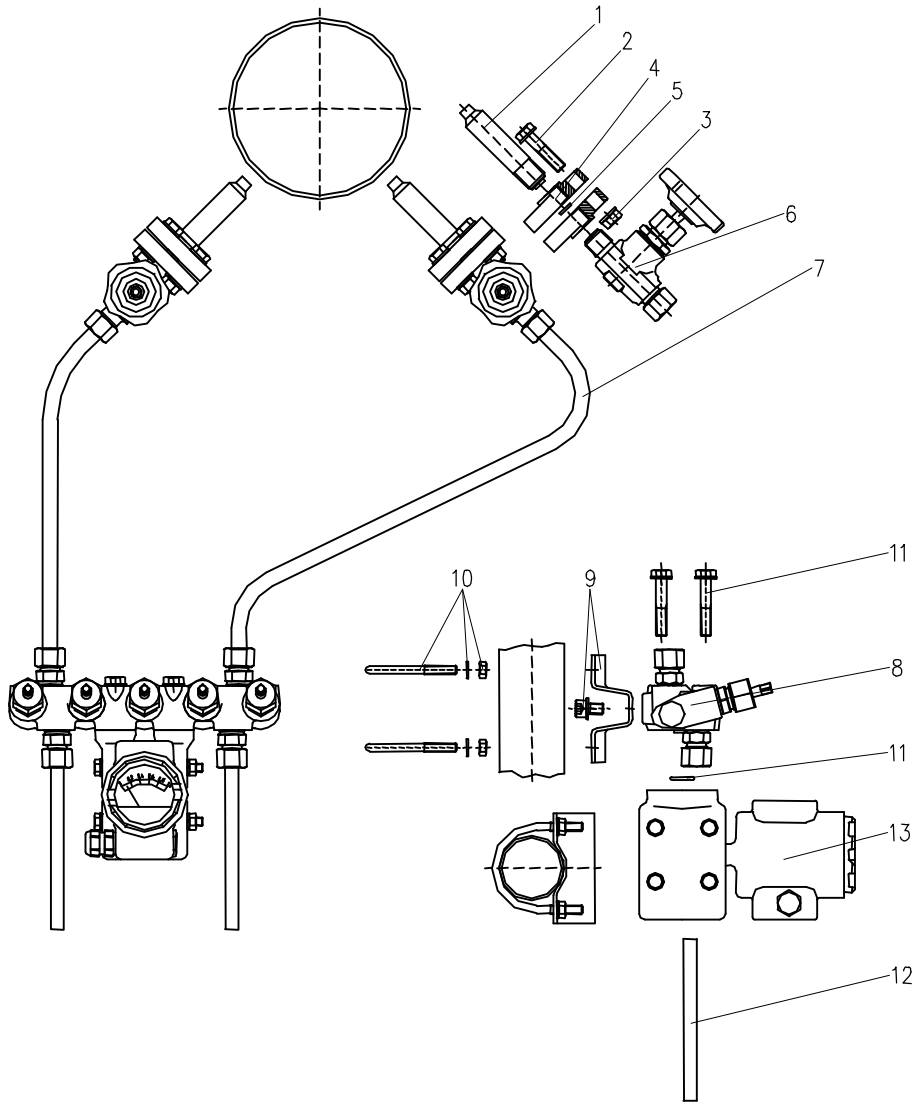

* different material

Pos.	Qty.	Designation	Part no. Steel	Part no. Stainless steel	Remark
1	1	Pressure tap G 1/2, form V, DIN 19 207	6779915	6779916	
2	8	Hexagon head cap screw M 10 x 45	510209	S006.32.210.45	
3	8	Hexagon nut M 10	510034	S006.26.210.17	
4	4	Threaded flange DIN 19 207, G 1/2	S006.21.117	S006.21.217	
5	2	Sealing washer DIN 19 207	S006.23.211/1.4571*	S006.23.211	
6	2	Primary isolation valve PN 160 G 1/2, form R, DIN 19 207/tube fitting 12S	S350.07.114.06	S350.07.214.06	
7	2	Impulse line Ø 12			
8	1	5 valve manifold PN 400 connections: Tube fitting 12S	S541.38.125	S541.38.225	
9	1	Accessory kit consisting of: mounting bracket, screws and washers	S006.42.100.02	S006.42.200.02	
10	2	Accessory kit for mounting on 2" NB pipe consisting of: 'U' bolt, washers and nuts	S006.42.105	S006.42.205	
11	1	Accessory kit consisting of: screws, washers and seal rings	catalogue page 8.00 - see appendix A1		
12	2	Blow-off line			
13	1	Instrument			

© This drawing is the exclusive property of ARMATURENFABRIK FRANZ SCHNEIDER GmbH & Co. KG. Without their consent it may not be reproduced or given to third parties.

SCHNEIDER Armaturen	**Hook-up:** **Flow Measurement** **Condition of Fluid:** **Liquid** **Max. Operating Pressure:** **PB 400 bar**	DPRL08 01/02

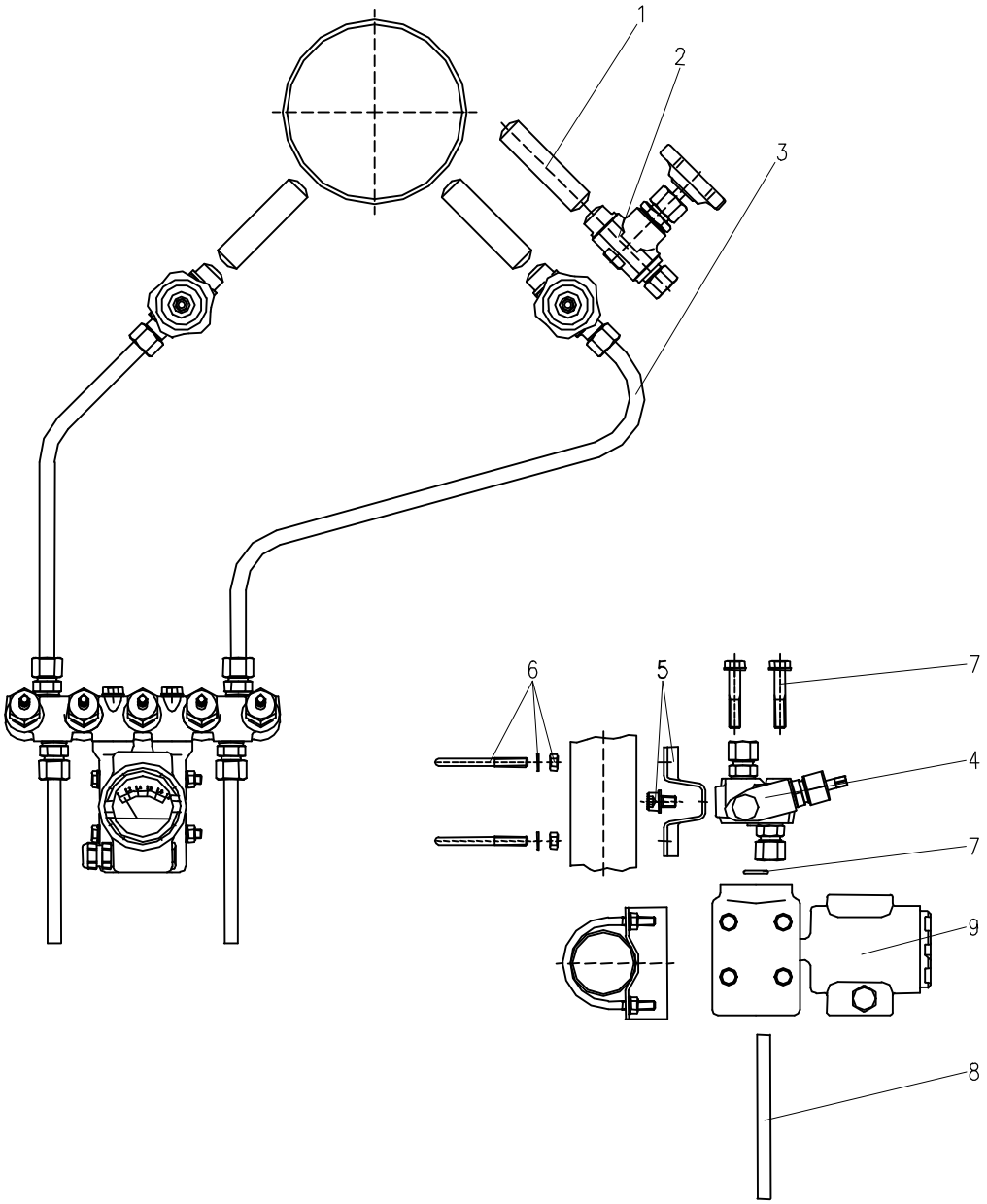

Pos.	Qty.	Designation	Part no. Steel	Part no. Stainless steel	Remark
1	1	Pressure tap outlet: weld end Ø 24 x 7,1	S007.56.602.01	S007.56.202.01	
2	2	Primary isolation valve PN 400 Ø 24 x 7,1 / tube fitting 12S	S350.05.130.09	S350.05.230.09	
3	2	Impulse line Ø 12			
4	1	5 valve manifold PN 400 connections: tube fitting 12S	S541.38.125	S541.38.225	
5	1	Accessory kit consisting of: mounting bracket, screws and washers	S006.42.100.02	S006.42.200.02	
6	2	Accessory kit for mounting on 2" NB pipe consisting of: 'U' bolt, washers and nuts	S006.42.105	S006.42.205	
7	1	Accessory kit consisting of: screws, washers and seal rings	catalogue page 8.00 - see appendix A1		
8	2	Blow-off line			
9	1	Instrument			

© This drawing is the exclusive property of ARMATURENFABRIK FRANZ SCHNEIDER GmbH & Co. KG. Without their consent it may not be reproduced or given to third parties.

SCHNEIDER Armaturen	**Hook-up:** **Flow Measurement** **Condition of Fluid:** **Liquid** **Max. Operating Pressure:** **PB 420 bar**	DPRL09 01/02

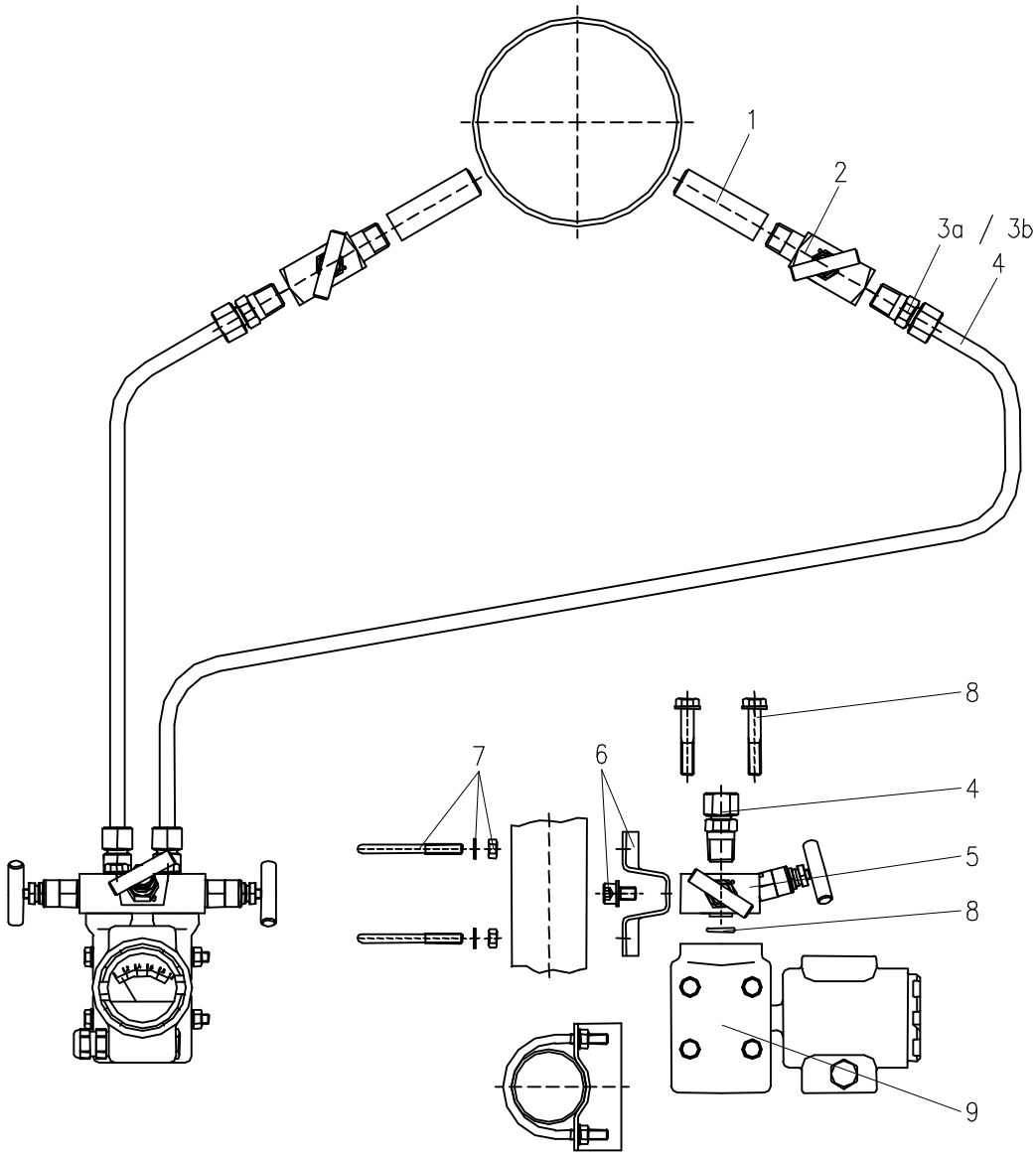

Pos.	Qty.	Designation	Part no. Steel	Part no. Stainless steel	Remark
1	1	Pressure tap			
2	2	Primary isolation valve PN 420 male / female 1/2-14 NPT	N354.07.101.05	N354.07.401.05	
3a	4	Male connector 1/2-14 NPT / tube fitting 12S	S007.53.108.05	S007.53.208.05	
3b	4	Male connector 1/2-14 NPT / twin ferrule compression ends Ø 12	choice of customer		
4	2	Impulse line Ø 12			
5	1	3 valve manifold PN 420 inlet: female 1/2-14 NPT	N542.39.181.01	N542.39.481.01	
6	1	Accessory kit consisting of: mounting bracket, screws and washers	S006.42.100.02	S006.42.200.02	
7	2	Accessory kit for mounting on 2" NB pipe consisting of: 'U' bolt, washers and nuts	S006.42.105	S006.42.205	
8	1	Accessory kit consisting of: screws and seal rings	catalogue page 8.00 - see appendix A1		
9	1	Instrument			

© This drawing is the exclusive property of ARMATURENFABRIK FRANZ SCHNEIDER GmbH & Co. KG. Without their consent it may not be reproduced or given to third parties.

SCHNEIDER Armaturen	Hook-up: **Flow Measurement** Condition of Fluid: **Liquid** Max. Operating Pressure: **PB 420 bar**	DPRL10 01/02

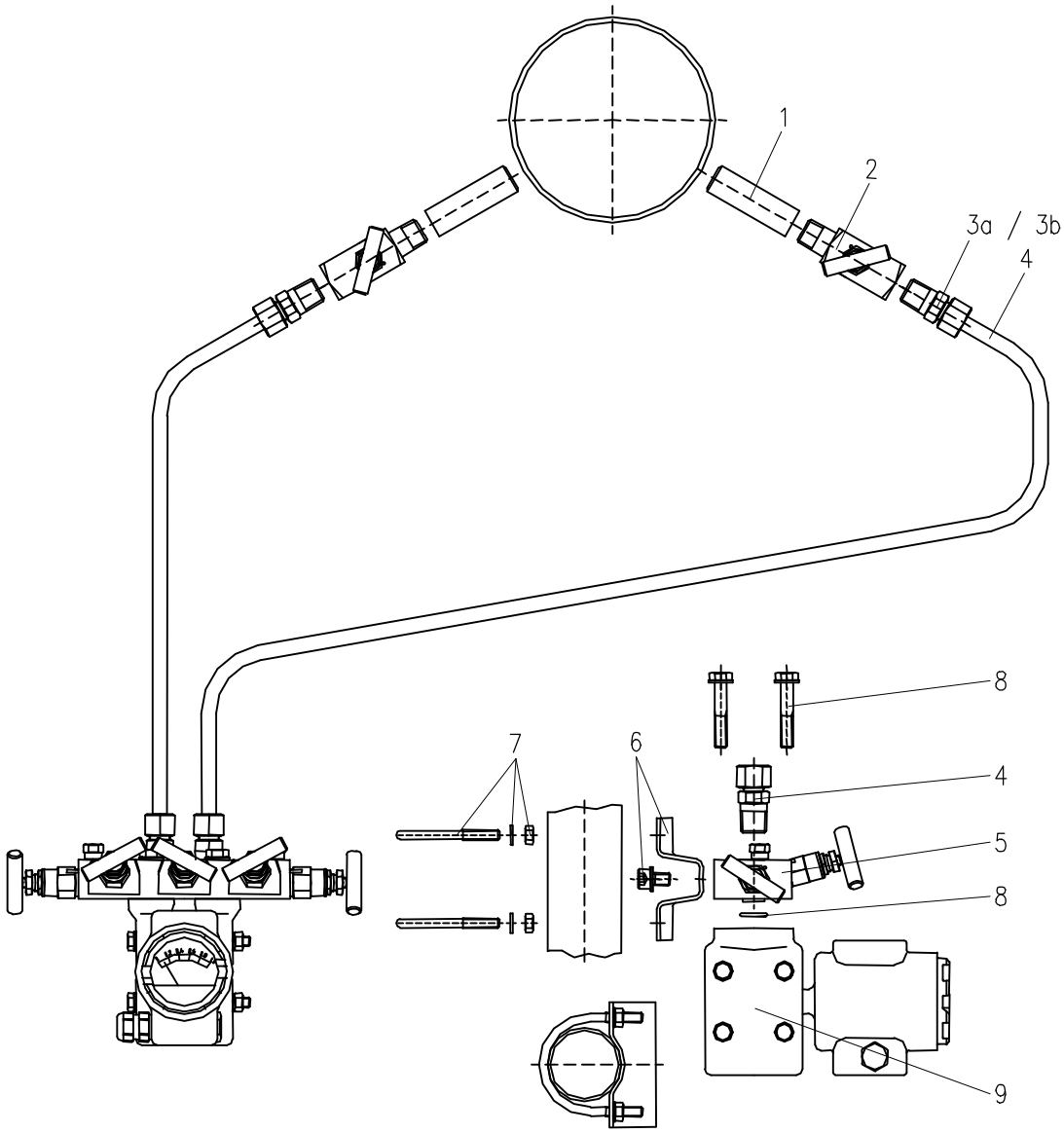

Pos.	Qty.	Designation	Part no. Steel	Part no. Stainless steel	Remark
1	1	Pressure tap			
2	2	Primary isolation valve PN 420 male / female 1/2-14 NPT	N354.07.101.05	N354.07.401.05	
3a	4	Male connector 1/2-14 NPT / tube fitting 12S	S007.53.108.05	S007.53.208.05	
3b	4	Male connector 1/2-14 NPT / twin ferrule compression ends Ø 12	choice of customer		
4	2	Impulse line Ø 12			
5	1	5 valve manifold PN 420 inlet: female 1/2-14 NPT	N542.48.180.01	N542.48.480.01	
6	1	Accessory kit consisting of: mounting bracket, screws and washers	S006.42.100.02	S006.42.200.02	
7	2	Accessory kit for mounting on 2" NB pipe consisting of: 'U' bolt, washers and nuts	S006.42.105	S006.42.205	
8	1	Accessory kit consisting of: screws and seal rings	catalogue page 8.00 - see appendix A1		
9	1	Instrument			

© This drawing is the exclusive property of ARMATURENFABRIK FRANZ SCHNEIDER GmbH & Co. KG. Without their consent it may not be reproduced or given to third parties.

SCHNEIDER Armaturen	**Hook-up:** **Flow Measurement** **Condition of Fluid:** **Liquid** **Max. Operating Pressure:** **PB 420 bar**	DPRL11 01/02

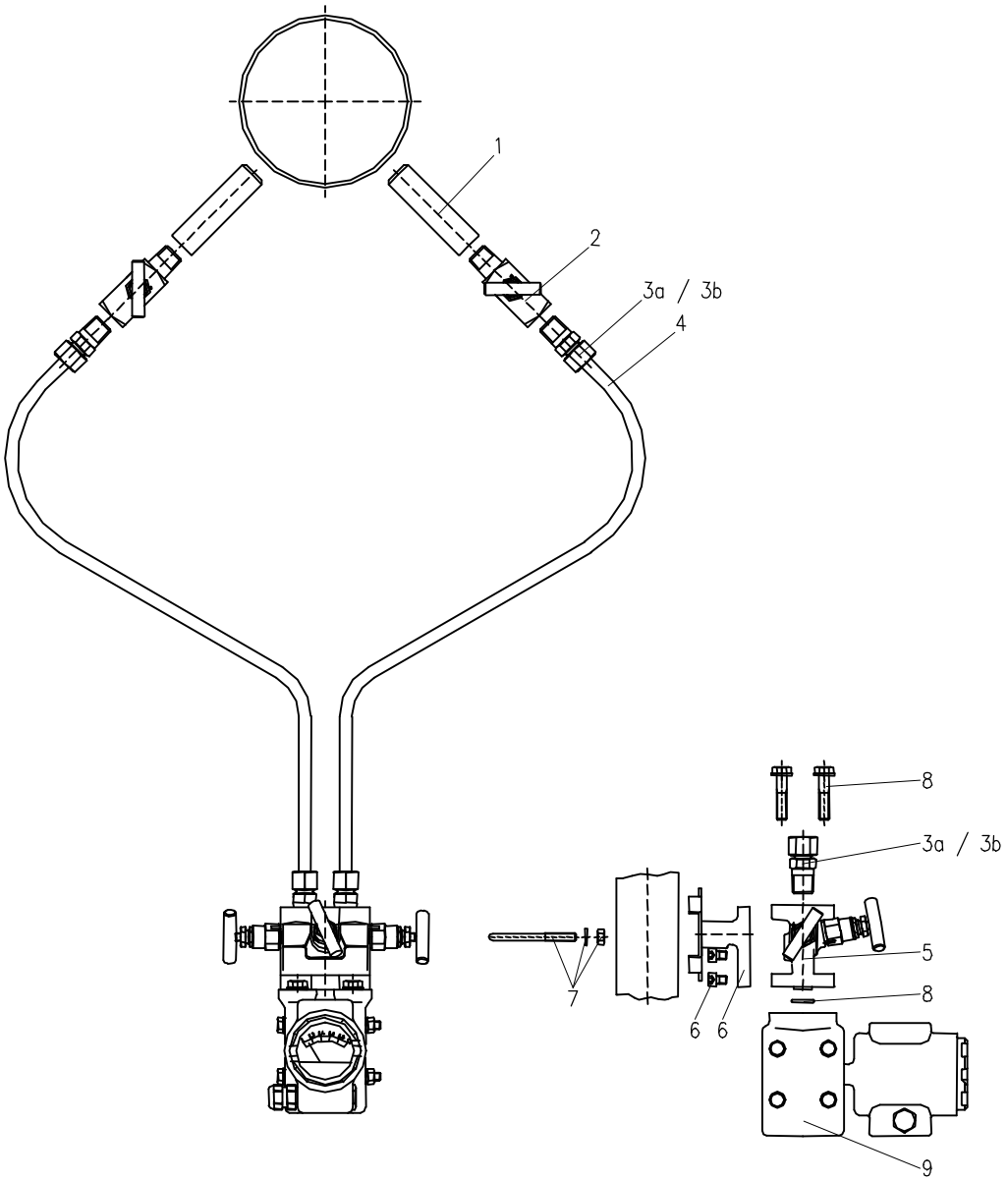

* different material

Pos.	Qty.	Designation	Part no. Steel	Part no. Stainless steel	Remark
1	1	Pressure tap			
2	2	Primary isolation valve PN 420 male / female 1/2-14 NPT	N354.07.101.05	N354.07.401.05	
3a	4	Male connector 1/2-14 NPT / tube fitting 12S	S007.53.108.05	S007.53.208.05	
3b	4	Male connector 1/2-14 NPT / twin ferrule compression ends Ø 12	choice of customer		
4	2	Impulse line Ø 12			
5	1	3 valve manifold PN 420 inlet: female 1/2-14 NPT	N542.46.181.01	N542.46.481.01	
6	1	Accessory kit consisting of: mounting bracket and socket head cap screws M 8 x 10	S006.12.216.60/A2*	S006.12.216.60	
7	1	Accessory kit consisting of: 'U' bolt, nuts and washers	S006.42.105	S006.42.205	
8	1	Accessory kit consisting of: screws and seal rings	catalogue page 8.00 - see appendix A1		
9	1	Instrument			

© This drawing is the exclusive property of ARMATURENFABRIK FRANZ SCHNEIDER GmbH & Co. KG. Without their consent it may not be reproduced or given to third parties.

SCHNEIDER Armaturen	**Hook-up:** **Flow Measurement** **Condition of Fluid:** **Liquid** **Max. Operating Pressure:** **PB 420 bar**	DPRL12 01/02

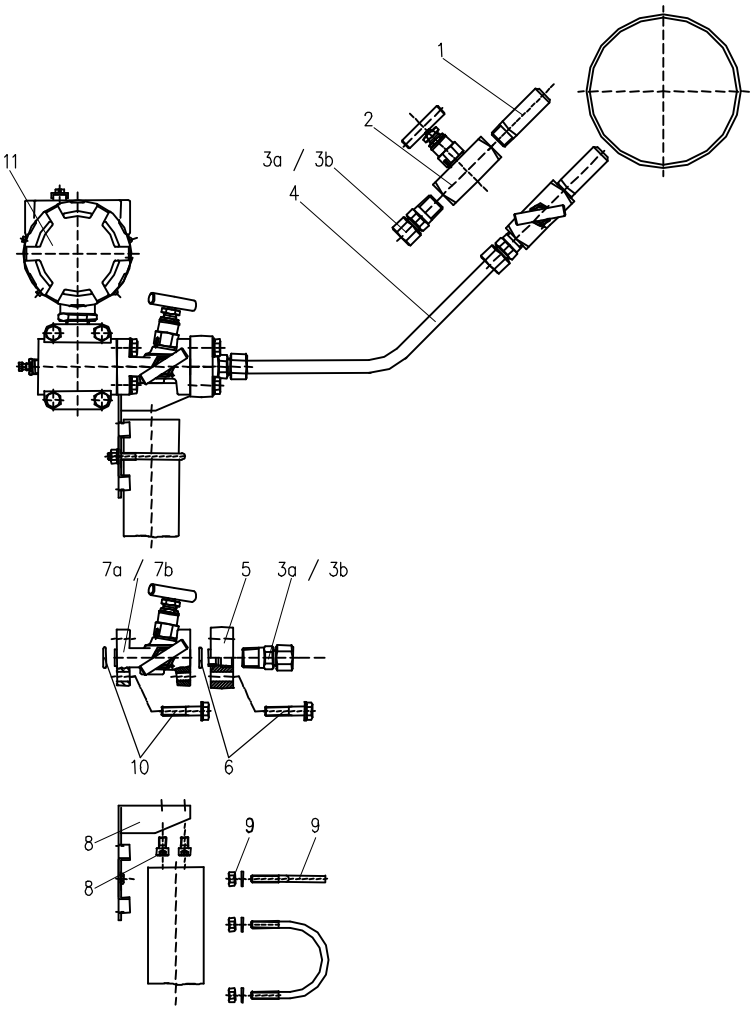

* different material

Pos.	Qty.	Designation	Part no. Steel	Part no. Stainless steel	Remark
1	2	Pressure tap			
2	2	Primary isolation valve PN 420 female / female 1/2-14 NPT	N354.03.101.05	N354.03.401.05	
3a	4	Male connector 1/2-14 NPT / tube fitting 12S	S007.53.108.05	S007.53.208.05	
3b	4	Male connector 1/2-14 NPT / twin ferrule compression ends Ø 12	choice of customer		
4	2	Impulse line Ø 12			
5	2	Oval flange, female 1/2-14 NPT	S006.19.156.22	S006.19.456.22	
6	1	Accessory kit consisting of: screws and seal rings	catalogue page 8.00 - see appendix A1		
7a	1	3 valve manifold PN 420 inlet: DIN 19 213-A with 7/16-20 UNF thread test / vent: female 1/4-18 NPT	N542.46.190.01	N542.46.490.01	
7b	1	3 valve manifold PN 420 inlet: DIN 19 213-A with 7/16-20 UNF thread without test connection	N542.46.191.01	N542.46.491.01	
8	1	Accessory kit consisting of: mounting bracket and socket head cap screws M 8 x 10	S006.12.216.61/A2*	S006.12.216.61	
9	1	Accessory kit consisting of: 'U' bolt, nuts and washers	S006.42.105	S006.42.205	
10	1	Accessory kit consisting of: screws and seal rings	catalogue page - see appendix A1		
11	1	Instrument			

© This drawing is the exclusive property of ARMATURENFABRIK FRANZ SCHNEIDER GmbH & Co. KG. Without their consent it may not be reproduced or given to third parties.

SCHNEIDER Armaturen	**Hook-up:** **Flow Measurement** **Condition of Fluid:** **Liquid** **Max. Operating Pressure:** **PB 420 bar**	DPRL13 01/02

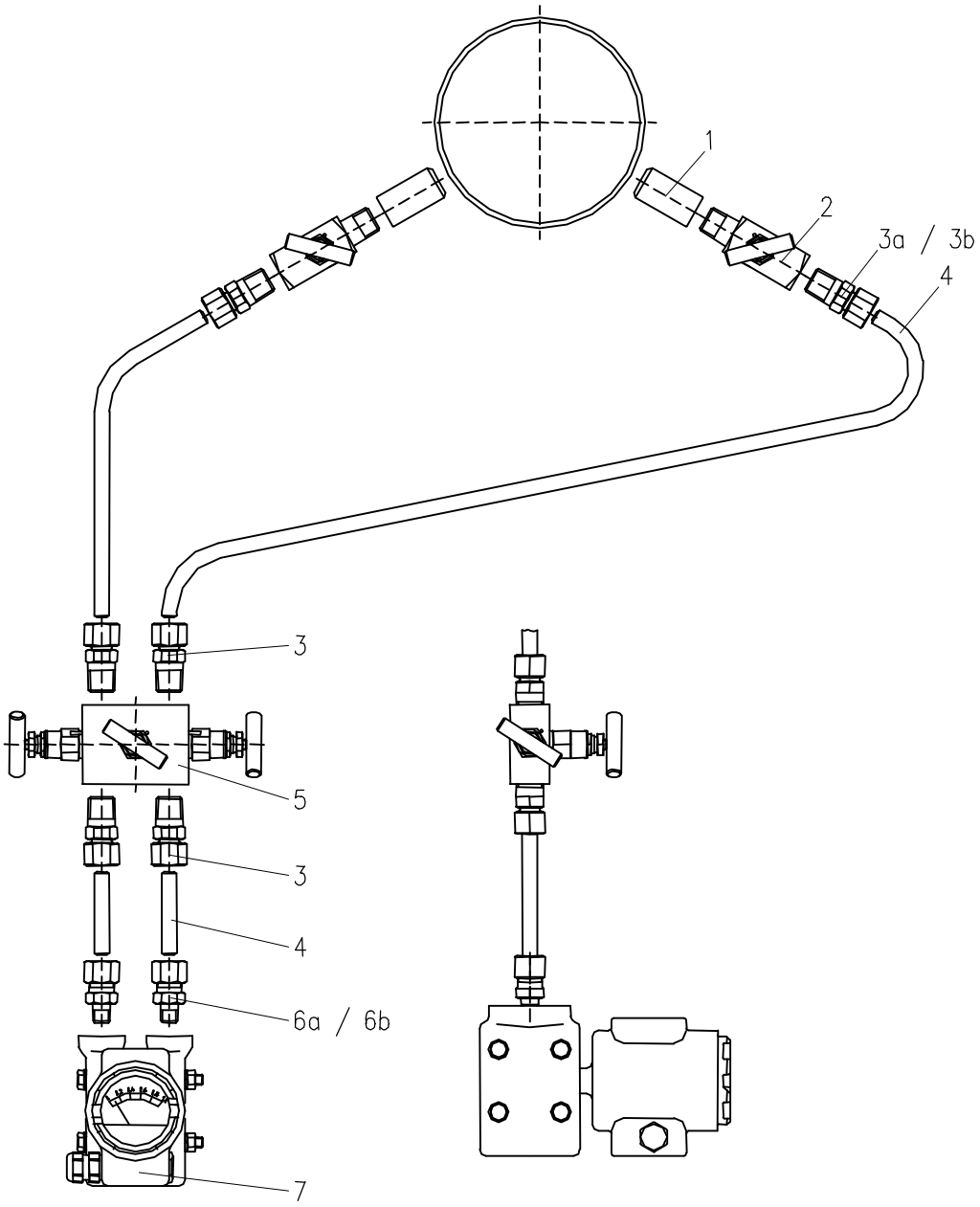

Pos.	Qty.	Designation	Part no. Steel	Part no. Stainless steel	Remark
1	1	Pressure tap			
2	2	Primary isolation valve PN 420 male / female 1/2-14 NPT	N354.07.101.05	N354.07.401.05	
3a	6	Male connector 1/2-14 NPT / tube fitting 12S	S007.53.108.05	S007.53.208.05	
3b	6	Male connector 1/2-14 NPT / twin ferrule compression ends Ø 12	choice of customer		
4	2	Impulse line Ø 12			
5	1	3 valve manifold PN 420 both sides female 1/2-14 NPT	N542.41.184.01	N542.41.484.01	
6a	2	Male connector 1/4-18 NPT / tube fitting 12S	S007.53.108.03	S007.53.208.03	
6b	2	Male connector 1/4-18 NPT / twin ferrule compression ends Ø 12	choice of customer		
7	1	Instrument			

© This drawing is the exclusive property of ARMATURENFABRIK FRANZ SCHNEIDER GmbH & Co. KG. Without their consent it may not be reproduced or given to third parties.

SCHNEIDER Armaturen	**Hook-up:** **Flow Measurement** **Condition of Fluid:** **Liquid** **Max. Operating Pressure:** **PB 420 bar**	DPRL14 01/02

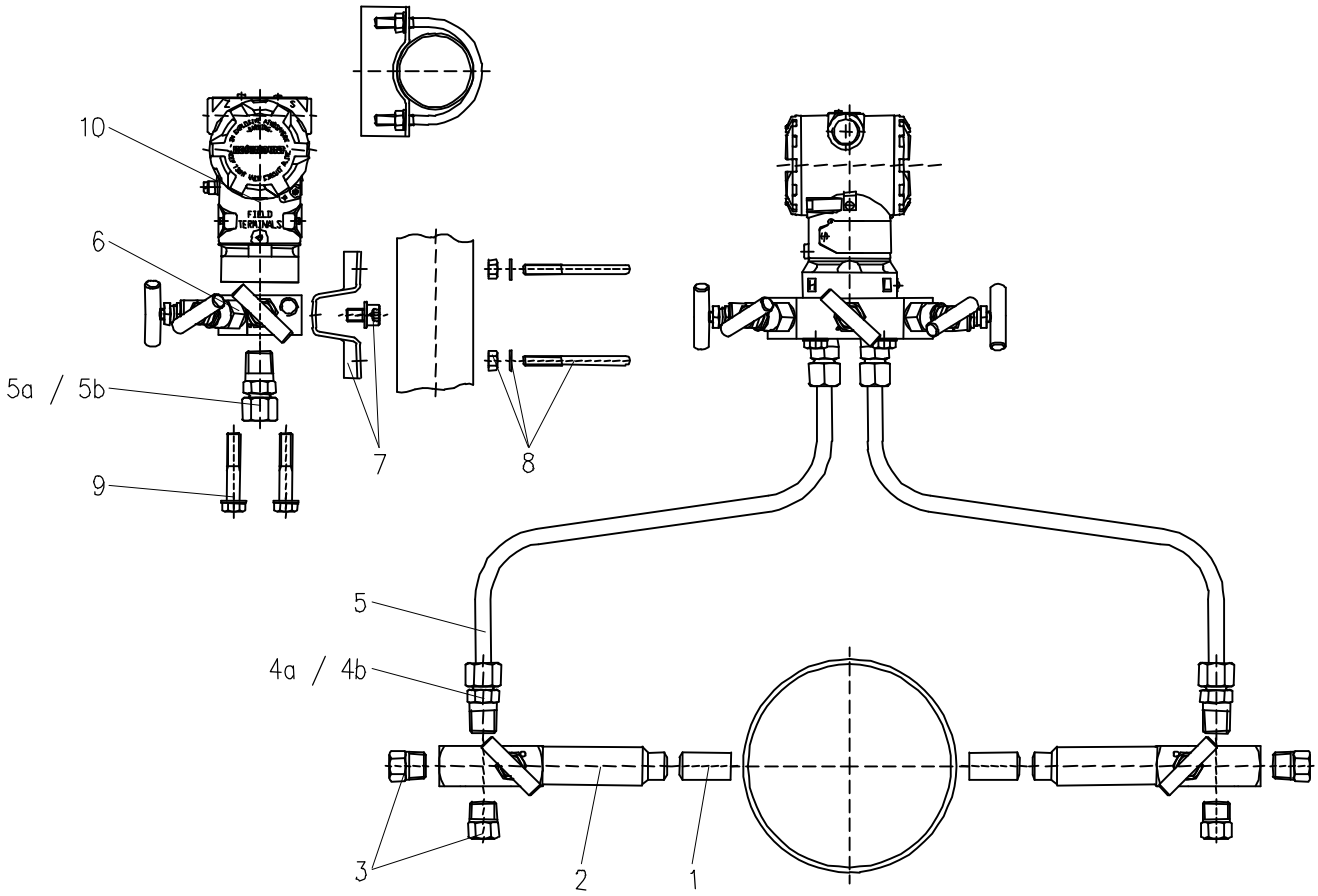

* different material

Pos.	Qty.	Designation	Part no. Stainless steel	Remark
1	2	Pressure tap		
2	2	Multiport valve PN 420 with extended body weld end / female 1/2-14 NPT	N354.17.427.01	
3	4	Screw plug 1/2-14 NPT	S006.14.441.03	
4a	2	Male connector 1/2-14 NPT / tube fitting 12S	S007.53.208.05	
4b	2	Male connector 1/2-14 NPT / twin ferrule compression ends Ø 12	choice of customer	
5	2	Impulse line Ø 12		
6	1	5 valve manifold PN 420 inlet: female 1/2-14 NPT	N542.48.492.02	
7	1	Accessory kit consisting of: mounting bracket, screws and washers	S006.42.200.02	
8	2	Accessory kit for mounting on 2" NB pipe consisting of: 'U' bolt, washers and nuts	S006.42.205	
9	1	Hexagon head cap screw 7/16-20 UNF x 2"	S006.33.166.20/St*	
10	1	Instrument incl. seal ring	Fisher-Rosemount Type 3051	

© This drawing is the exclusive property of ARMATURENFABRIK FRANZ SCHNEIDER GmbH & Co. KG. Without their consent it may not be reproduced or given to third parties.

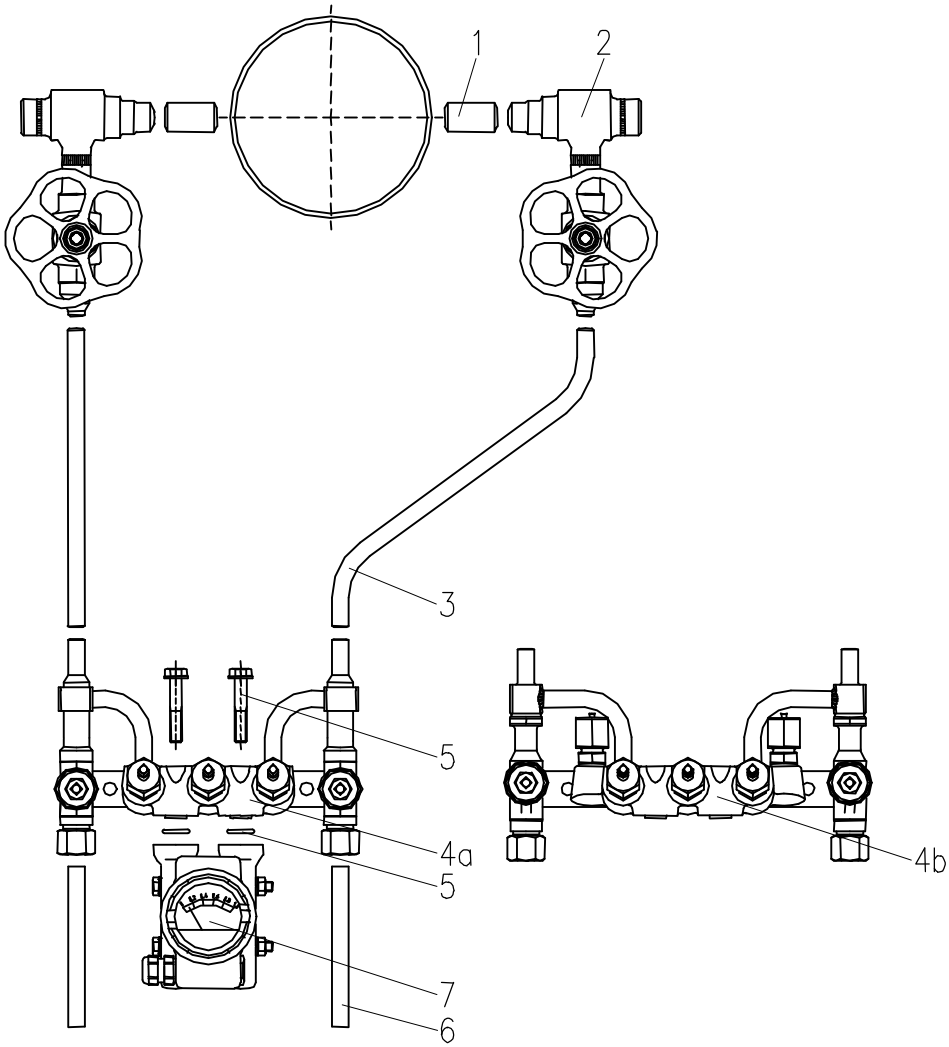

Pos.	Qty.	Designation	Part no. Steel	Part no. Stainless steel	Remark
1	2	Pressure tap Ø 24 x 7,1	S007.56.600.66	S007.56.200.66	
2	2	Combination condensation pot / primary isolation valve Ø 24 x 7,1 / Ø 14 x 2,5	S007.51.641.06	S007.51.241.06	
3	2	Impulse line Ø 14			
4a	1	Manifold combination PN 400 Ø 14 x 2,5 / tube fitting 14S	N541.37.135.01	N541.37.235.01	
4b	1	Manifold combination PN 400 with test connection M 20 x 1,5 Ø 14 x 2,5 / tube fitting14S	N541.37.135.51	N541.37.235.51	
5	1	Accessory kit consisting of: screws, washers and seal rings	catalogue page 8.00 - see appendix A1		
6	2	Blow-off line			
7	1	Instrument			

© This drawing is the exclusive property of ARMATURENFABRIK FRANZ SCHNEIDER GmbH & Co. KG. Without their consent it may not be reproduced or given to third parties.

© This drawing is the exclusive property of ARMATURENFABRIK FRANZ SCHNEIDER GmbH & Co. KG. Without their consent it may not be reproduced or given to third parties.

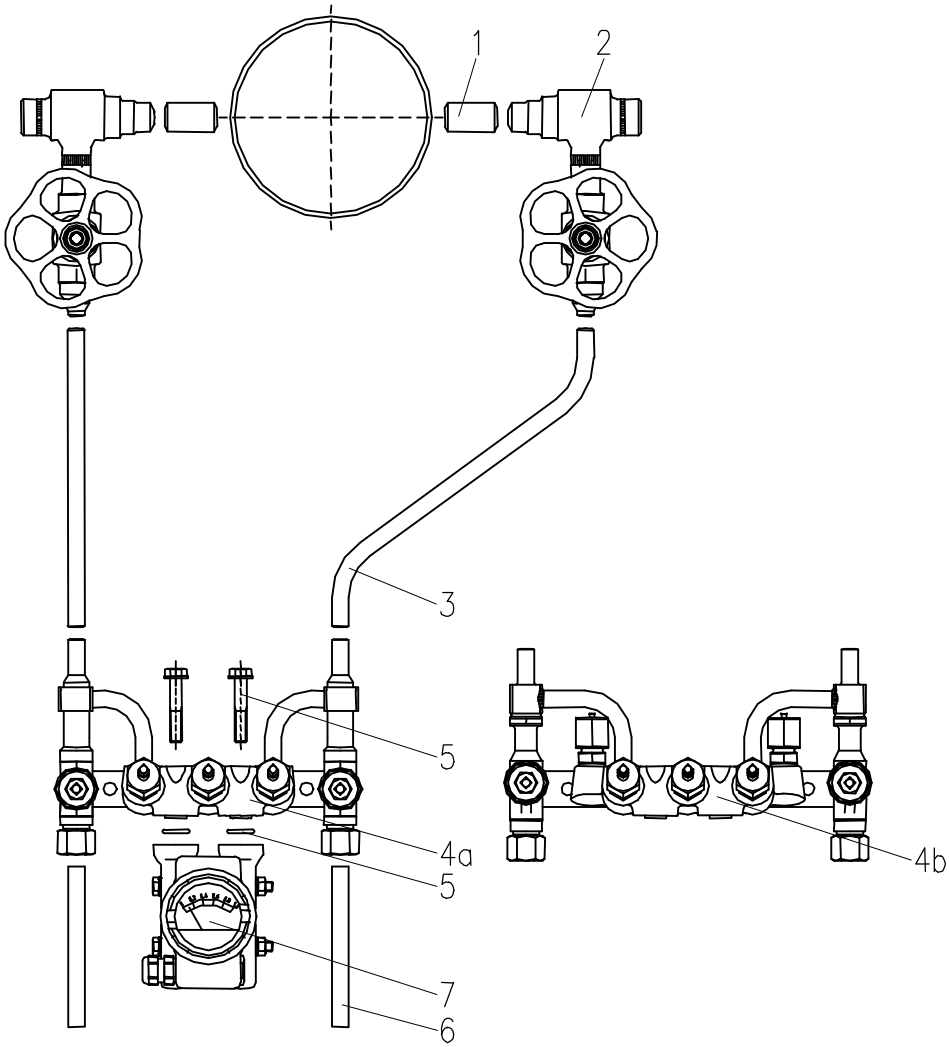

Pos.	Qty.	Designation	Part no. Steel	Part no. Stainless steel	Remark
1	2	Pressure tap Ø 21,3 x 3,2			
2	2	Combination condensation pot primary isolation valve Ø 21,3 x 3,2 / Ø 12 x 1,5	S007.51.641.36	S007.51.241.36	
3	2	Impulse line Ø 12			
4a	1	Manifold combination PN 250 Ø 12 x 1,5 / tube fitting 12S	N541.37.136.01	N541.37.236.01	
4b	1	Manifold combination PN 250 with test connection M 20 x 1,5 Ø 12 x 1,5 / tube fitting 12S	N541.37.136.51	N541.37.236.51	
5	1	Accessory kit consisting of: screws, washers and seal rings	catalogue page 8.00 - see appendix A1		
6	2	Blow-off line			
7	1	Instrument			

SCHNEIDER Armaturen	**Hook-up:** **Flow Measurement** **Condition of Fluid:** **Steam** **Max. Operating Pressure:** **PB 400 bar**	DPRS03 01/02

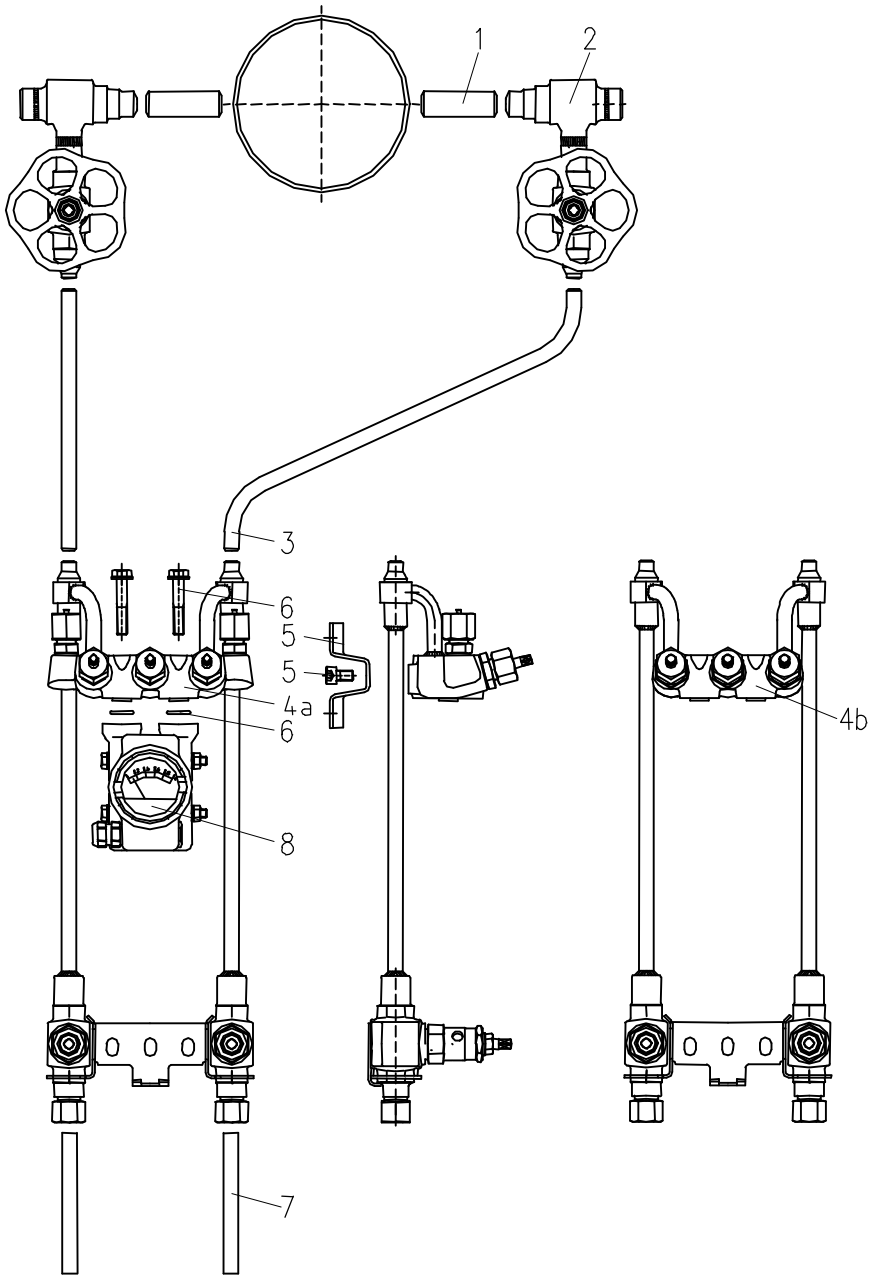

Pos.	Qty.	Designation	Part no. Steel	Part no. Stainless steel	Remark
1	2	Pressure tap Ø 24 x 7,1	S007.56.600.66	S007.56.200.66	
2	2	Combination condensation pot / primary isolation valve Ø 24 x 7,1 / Ø 14 x 2,5	S007.51.641.06	S007.51.241.06	
3	2	Impulse line Ø 14			
4a	1	Manifold combination PN 400 with test connection M 20 x 1,5 Ø 14 x 2,5 / tube fitting 14S	N541.77.135.51	N541.77.235.51	
4b	1	Manifold combination PN 400 without test connection Ø 14 x 2,5 / tube fitting 14S	N541.77.135.01	N541.77.235.01	
5	1	Accessory kit consisting of: mounting bracket, screws and washers	S006.42.100.02	S006.42.200.02	
6	1	Accessory kit consisting of: screws, washers and seal rings	catalogue page 8.00 - see appendix A1		
7	2	Blow-off line			
8	1	Instrument			

© This drawing is the exclusive property of ARMATURENFABRIK FRANZ SCHNEIDER GmbH & Co. KG. Without their consent it may not be reproduced or given to third parties.

SCHNEIDER Armaturen	**Hook-up:** **Flow Measurement** **Condition of Fluid:** **Steam** **Max. Operating Pressure:** **PB 250 bar**	DPRS04 01/02

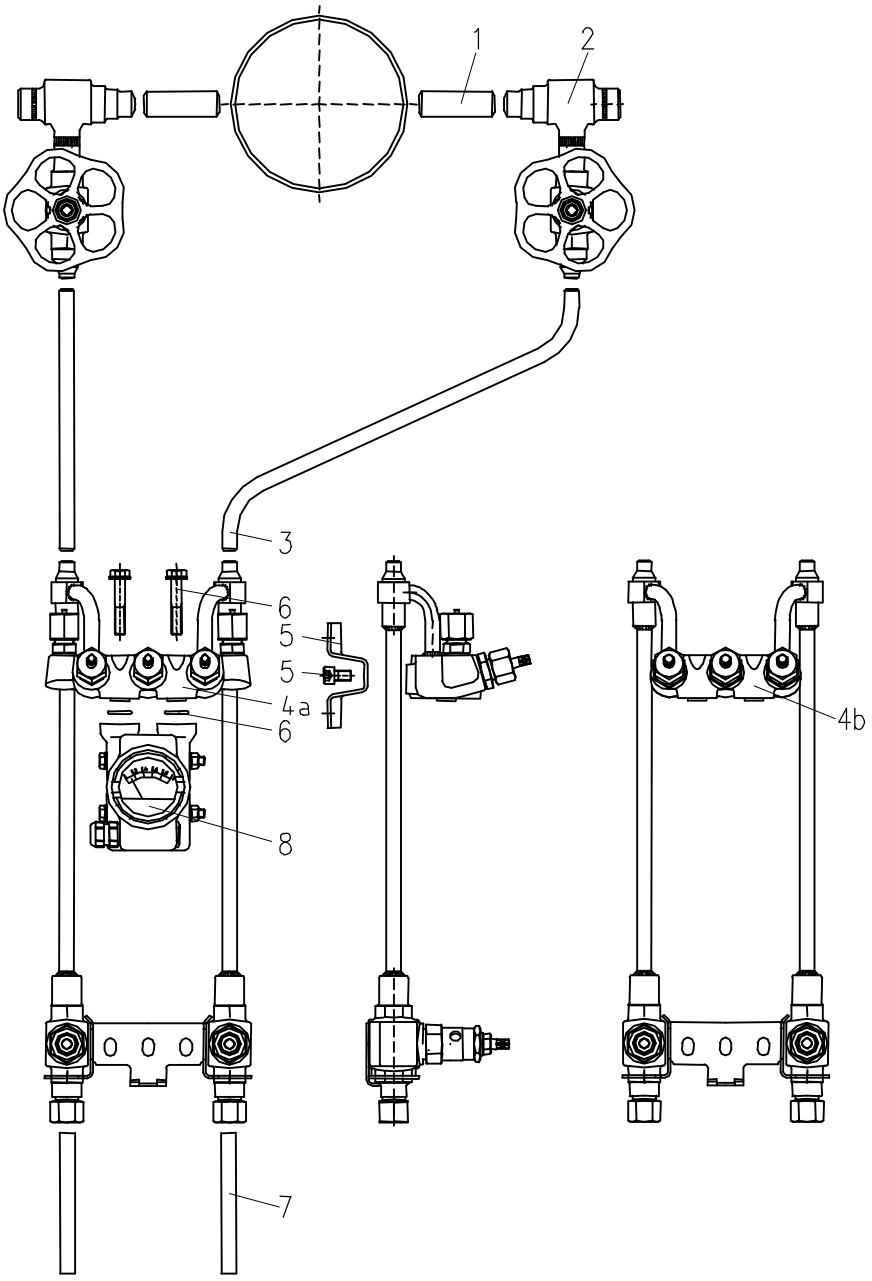

Pos.	Qty.	Designation	Part no. Steel	Part no. Stainless steel	Remark
1	2	Pressure tap Ø 21,3 x 3,2			
2	2	Combintion condensation pot / primary isolation valve Ø 21,3 x 3,2 / Ø 12 x 1,5	S007.51.641.36	S007.51.241.36	
3	2	Impulse line Ø 12			
4a	1	Manifold combination PN 250 with test connection M 20 x 1,5 Ø 12 x 1,5 / tube fitting 12S	N541.77.136.51	N541.77.236.51	
4b	1	Manifold combination PN 250 without test connection Ø 12 x 1,5 / tube fitting 12S	N541.77.136.01	N541.77.236.01	
5	1	Accessory kit consisting of: mounting bracket, screws and washers	S006.42.100.02	S006.42.200.02	
6	1	Accessory kit consisting of: screws, washers and seal rings	catalogue page 8.00 - see appendix A1		
7	2	Blow-off line			
8	1	Instrument			

© This drawing is the exclusive property of ARMATURENFABRIK FRANZ SCHNEIDER GmbH & Co. KG. Without their consent it may not be reproduced or given to third parties.

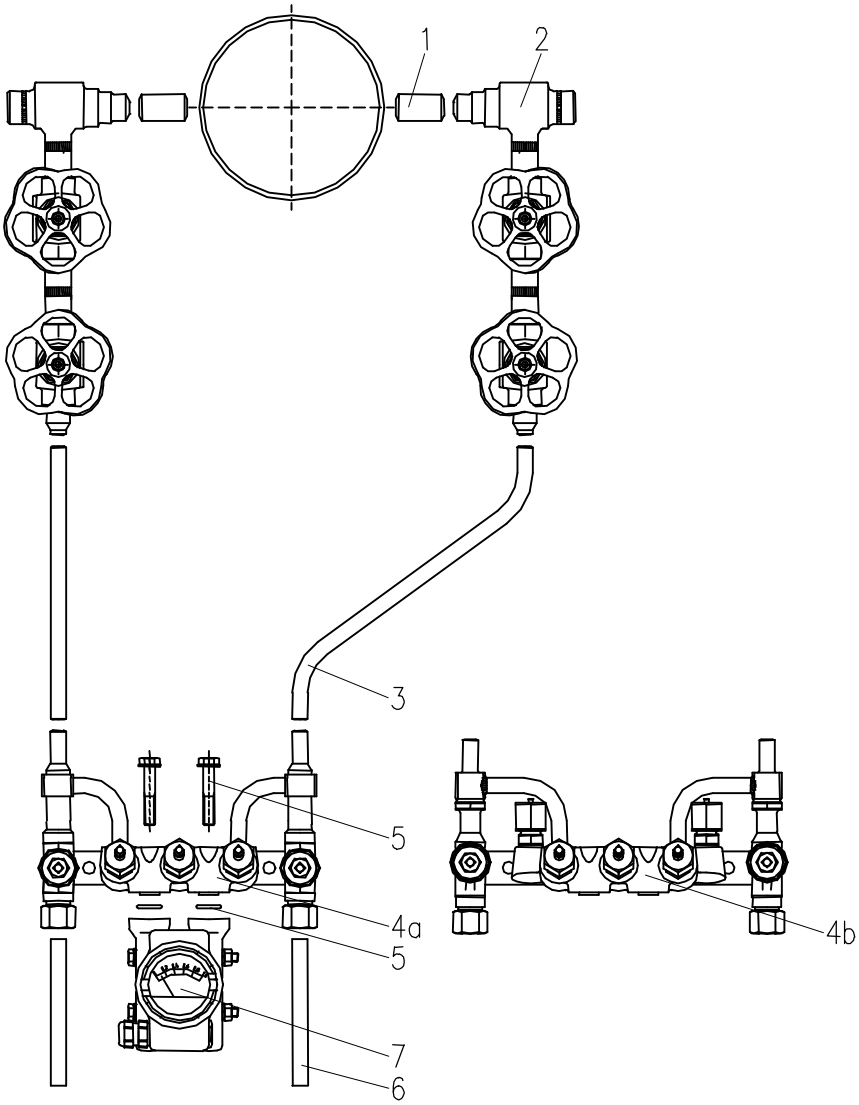

Pos.	Qty.	Designation	Part no. Steel	Part no. Stainless steel	Remark
1	2	Pressure tap Ø 24 x 7,1	S007.56.600.66	S007.56.200.66	
2	2	Combination condensation pot / tandem primary isolation valve Ø 24 x 7,1 / Ø 14 x 2,5	S007.51.642.06	S007.51.242.06	
3	2	Impulse line Ø 14			
4a	1	Manifold combination PN 400 Ø 14 x 2,5 / tube fitting 14S	N541.37.135.01	N541.37.235.01	
4b	1	Manifold combination PN 400 with test connection M 20 x 1,5 Ø 14 x 2,5 / tube fitting 14S	N541.37.135.51	N541.37.235.51	
5	1	Accessory kit consisting of: Screws, washers and seal rings	catalogue page 8.00 - see appendix A1		
6	2	Blow-off line			
7	1	Instrument			

© This drawing is the exclusive property of ARMATURENFABRIK FRANZ SCHNEIDER GmbH & Co. KG. Without their consent it may not be reproduced or given to third parties.

Armaturenfabrik Franz Schneider GmbH & Co.KG • D-74226 Nordheim • Germany • Tel. 07133/101-0 • Fax 07133/101-180

© This drawing is the exclusive property of ARMATURENFABRIK FRANZ SCHNEIDER GmbH & Co. KG. Without their consent it may not be reproduced or given to third parties.

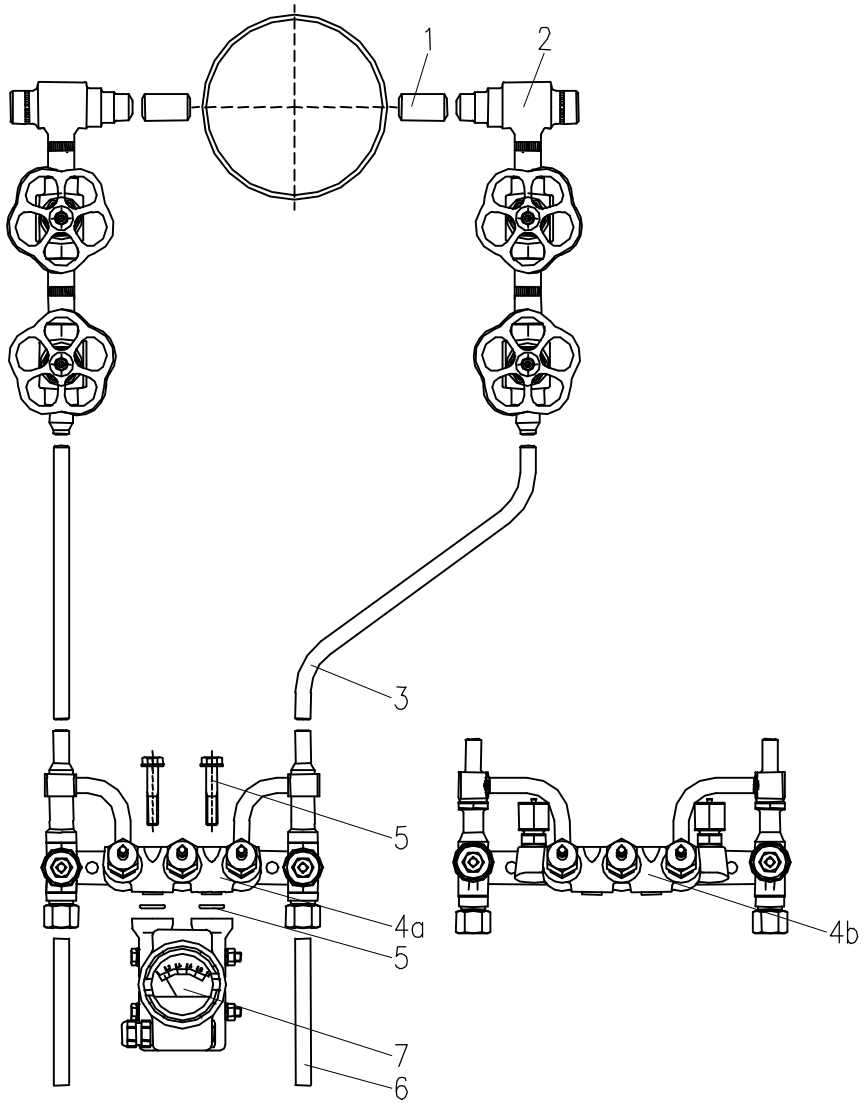

Pos.	Qty.	Designation	Part no. Steel	Part no. Stainless steel	Remark
1	2	Pressure tap Ø 21,3 x 3,2			
2	2	Combination condensation pot / tandem primary isolation valve Ø 21,3 x 3,2 / Ø 12 x 1,5	S007.51.642.36	S007.51.242.36	
3	2	Impulse line Ø 12			
4a	1	Manifold combination PN 250 without test connection Ø 12 x 1,5 / tube fitting 12S	N541.37.136.01	N541.37.236.01	
4b	1	Manifold combination PN 250 with test connection M 20 x 1,5 Ø 12 x 1,5 / tube fitting 12S	N541.37.136.51	N541.37.236.51	
5	1	Accessory kit consisting of: screws, washers and seal rings	catalogue page 8.00 - see appendix A1		
6	2	Blow-off line			
7	1	Instrument			

SCHNEIDER Armaturen	**Hook-up:** **Flow Measurement** **Condition of Fluid:** **Steam** **Max. Operating Pressure:** **PB 400 bar**	DPRS07 01/02

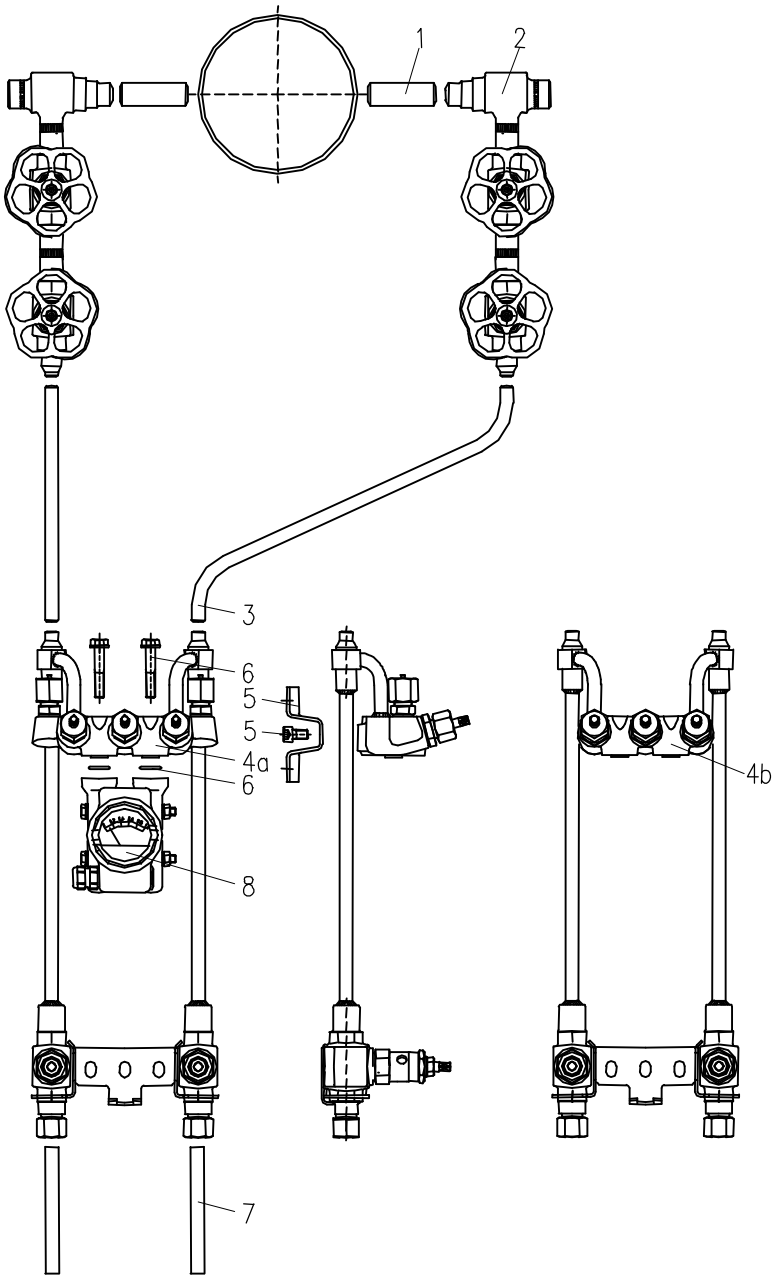

Pos.	Qty.	Designation	Part no. Steel	Part no. Stainless steel	Remark
1	2	Pressure tap Ø 24 x 7,1	S007.56.600.66	S007.56.200.66	
2	2	Combination condensation pot / tandem primary isolation valve Ø 24 x 7,1 / Ø 14 x 2,5	S007.51.642.06	S007.51.242.06	
3	2	Impulse line Ø 14			
4a	1	Manifold combination PN 400 with test connection M 20 x 1,5 Ø 14 x 2,5 / tube fitting 14S	N541.77.135.51	N541.77.235.51	
4b	1	Manifold combination PN 400 without test connection Ø 14 x 2,5 / tube fitting 14S	N541.77.135.01	N541.77.235.01	
5	1	Accessory kit consisting of: mounting bracket, screws and washers	S006.42.100.02	S006.42.200.02	
6	1	Accessory kit consisting of: screws, washers and seal rings	catalogue page 8.00 - see appendix A1		
7	2	Blow-off line			
8	1	Instrument			

© This drawing is the exclusive property of ARMATURENFABRIK FRANZ SCHNEIDER GmbH & Co. KG. Without their consent it may not be reproduced or given to third parties.

SCHNEIDER Armaturen	**Hook-up:** **Flow Measurement** **Condition of Fluid:** **Steam** **Max. Operating Pressure:** **PB 250 bar**	DPRS08 01/02

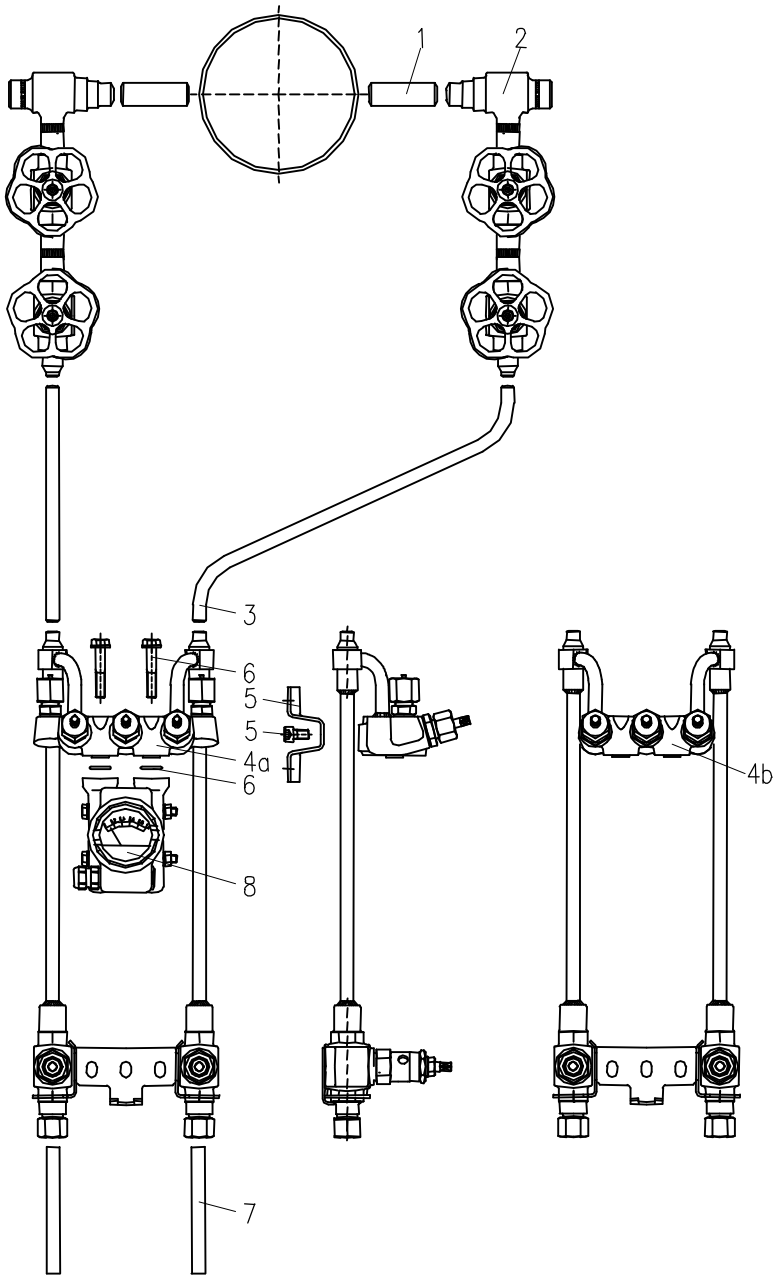

Pos.	Qty.	Designation	Part no. Steel	Part no. Stainless steel	Remark
1	2	Pressure tap Ø 21,3 x 3,2			
2	2	Combination condensation pot / tandem primary isolation valve Ø 21,3 x 3,2 / Ø 12 x 1,5	S007.51.642.36	S007.51.242.36	
3	2	Impulse line Ø 12			
4a	1	Manifold combination PN 250 with test connection M 20 x 1,5 Ø 12 x 1,5 / tube fitting 12S	N541.77.136.51	N541.77.236.51	
4b	1	Manifold combination PN 250 without test connection Ø 12 x 1,5 / tube fitting 12S	N541.77.136.01	N541.77.236.01	
5	1	Accessory kit consisting of: mounting bracket, screws and washers	S006.42.100.02	S006.42.200.02	
6	1	Accessory kit consisting of: Screws, washers and seal rings	catalogue page 8.00 - see appendix A1		
7	2	Blow-off line			
8	1	Instrument			

© This drawing is the exclusive property of ARMATURENFABRIK FRANZ SCHNEIDER GmbH & Co. KG. Without their consent it may not be reproduced or given to third parties.

SCHNEIDER Armaturen	**Hook-up:** **Flow Measurement** **Condition of Fluid:** **Steam** **Max. Operating Pressure:** **PB 250 bar**	DPRS09 01/02

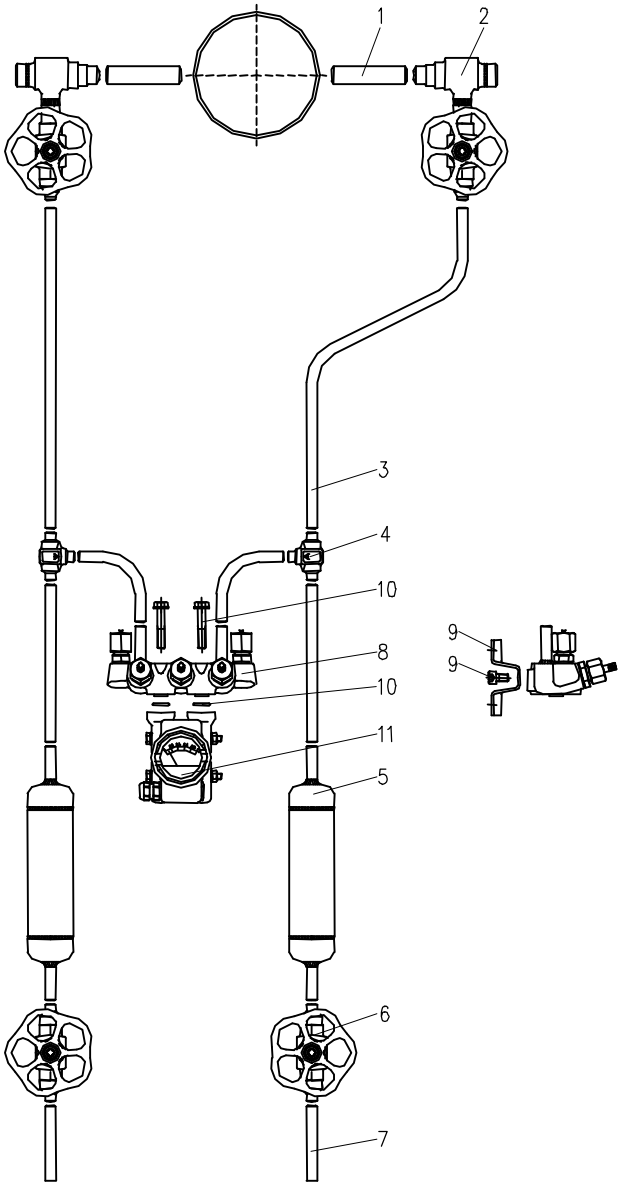

Pos.	Qty.	Designation	Part no. Steel	Part no. Stainless steel	Remark
1	2	Pressure tap Ø 21,3 x 3,2			
2	2	Combination condensation pot / primary isolation valve Ø 21,3 x 3,2 / Ø 12 x 1,5	S007.51.641.36	S007.51.241.36	
3	2	Impulse line Ø 12			
4	2	Tee Ø 12 x 1,5	S006.40.110.07	S006.40.210.07	
5	2	Separator			
6	2	Primary isolation valve PN 250 with external stem thread both sides with weld end Ø 12 x 1,5	S340.11.612.03	S340.11.212.03	
7	2	Blow-off line			
8	1	3 valve manifold PN 250 DN 8 with test connection M 20 x 1,5 inlet: weld end Ø 12 x 1,5	N541.85.136.01	N541.85.236.01	
9	1	Accessory kit consisting of: mounting bracket, screws and washers	S006.42.100.02	S006.42.200.02	
10	1	Accessory kit consisting of: screws and seal rings	catalogue page 8.00 - see appendix A1		
11	1	Instrument			

© This drawing is the exclusive property of ARMATURENFABRIK FRANZ SCHNEIDER GmbH & Co. KG. Without their consent it may not be reproduced or given to third parties.

SCHNEIDER Armaturen	**Hook-up:** **Flow Measurement** **Condition of Fluid:** **Steam** **Max. Operating Pressure:** **PB 200 bar**	DPRS10 01/02

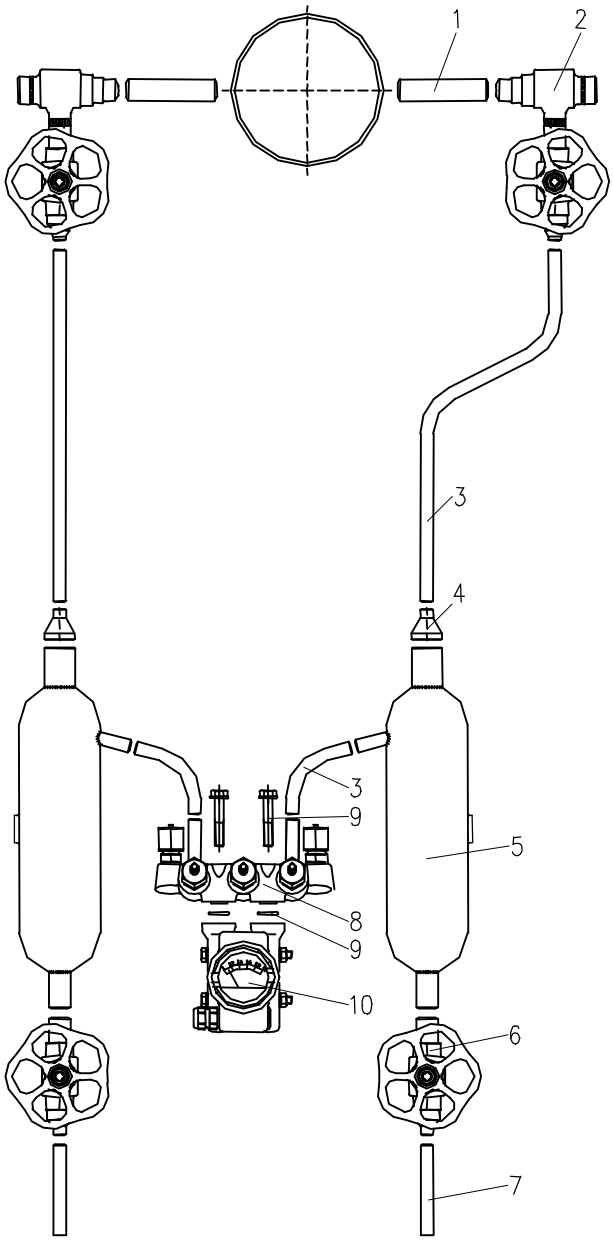

Pos.	Qty.	Designation	Part no. Steel	Part no. Stainless steel	Remark
1	2	Pressure tap Ø 24 x 7,1	S007.56.600.66	S007.56.200.66	
2	2	Combination condensation pot / primary isolation valve Ø 24 x 7,1 / Ø 14 x 2,5	S007.51.641.06	S007.51.241.06	
3	2	Impulse line Ø 12			
4	2	Reducer Ø 33,7 x Ø 25 / Ø 14 x 2,5	S006.40.130	S006.40.230	
5	2	Separator			
6	2	Primary isolation valve PN 500 with external stem thread Ø 24 x 7,1 / Ø 14 x 2,5	S340.11.636.40	S340.11.236.40	
7	2	Blow-off line			
8	1	3 valve manifold PN 400 DN 8 with test connection M 20 x 1,5 inlet: weld end Ø 14 x 2,5	N541.85.135.01	N541.85.235.01	
9	1	Accessory kit consisting of: screws and seal rings	catalogue page 8.00 - see appendix A1		
10	1	Instrument			

© This drawing is the exclusive property of ARMATURENFABRIK FRANZ SCHNEIDER GmbH & Co. KG. Without their consent it may not be reproduced or given to third parties.

Hook-ups
F

Level measurements

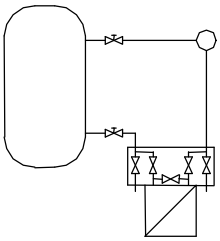

6

SCHNEIDER Armaturen	**Hook-up:** **Level Measurement** **Condition of Fluid:** **Liquid** **Max. Operating Pressure:** **PB 250 bar**	F01 01/02

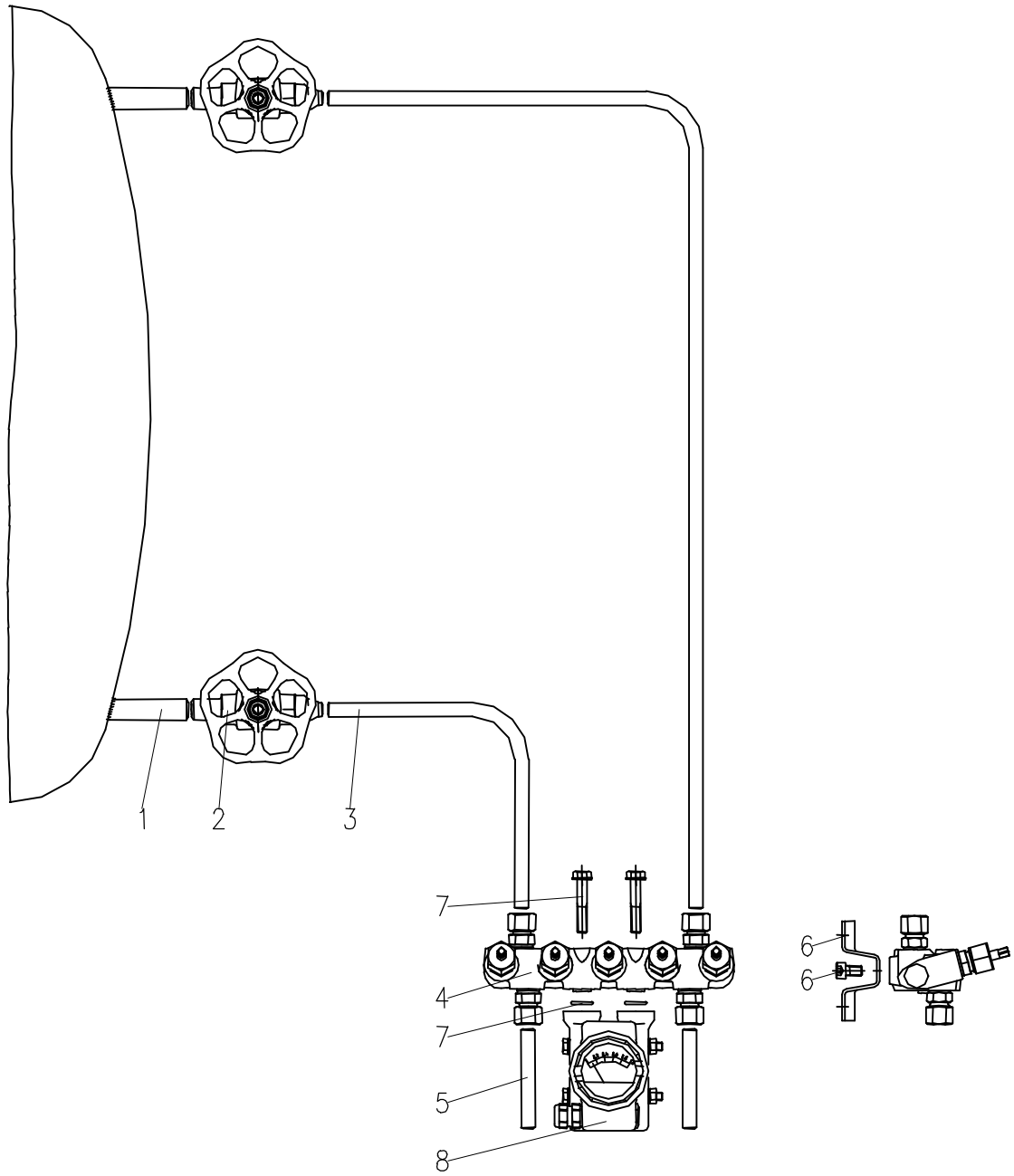

Pos.	Qty.	Designation	Part no. Steel	Part no. Stainless steel	Remark
1	1	Pressure tap			
2	2	Primary isolation valve PN 250 with external stem thread Ø 21,3 x 3,2 / Ø 12 x 1,5	S340.11.612.16	S340.11.212.16	
3	2	Impulse line Ø 12			
4	1	5 valve manifold PN 400 connections: tube fitting 12S	S541.38.125	S541.38.225	
5	2	Blow-off line			
6	1	Accessory kit consisting of: mounting bracket, screws and washers	S006.42.100.02	S006.42.200.02	
7	1	Accessory kit consisting of: screws, washers and seal rings	catalogue page 8.00 - see appendix A1		
8	1	Instrument			

© This drawing is the exclusive property of ARMATURENFABRIK FRANZ SCHNEIDER GmbH & Co. KG. Without their consent it may not be reproduced or given to third parties.

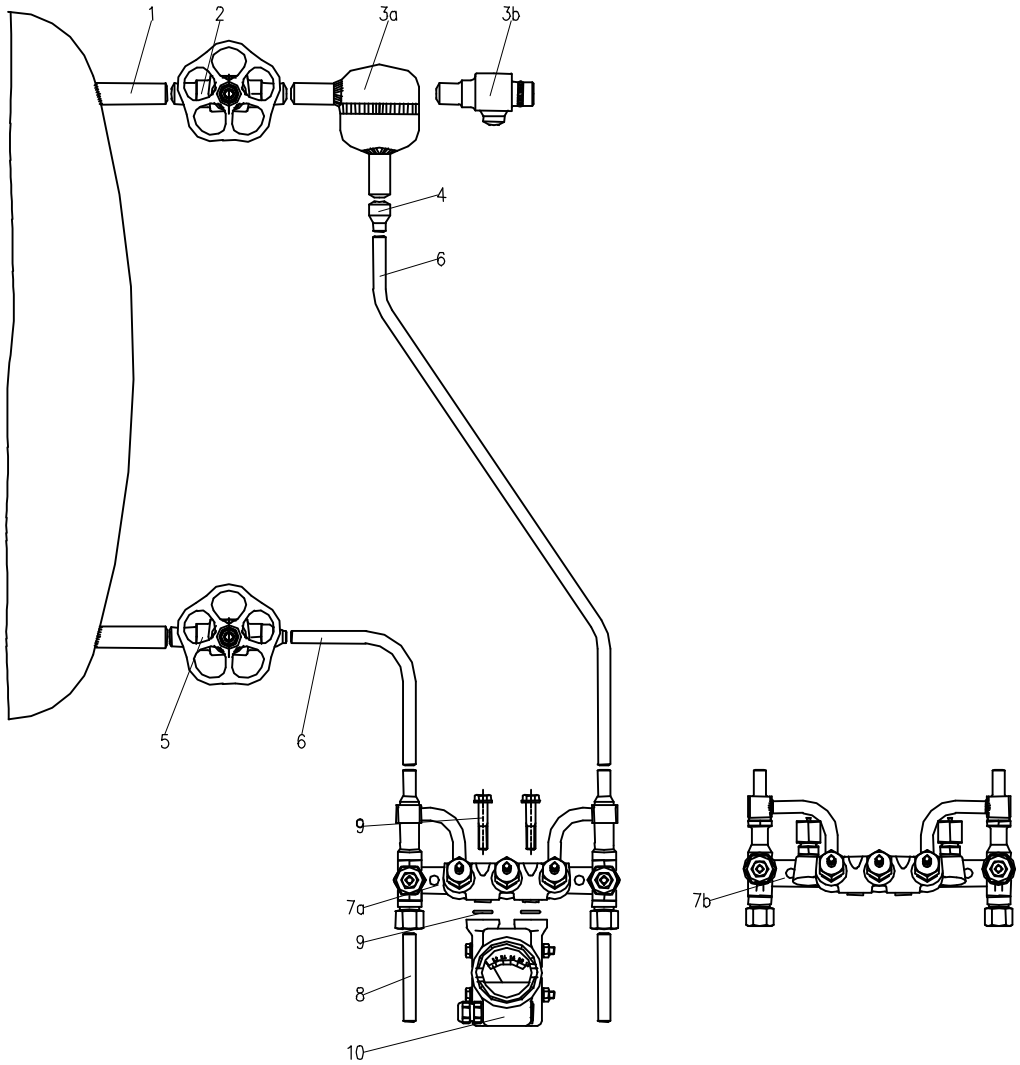

Pos.	Qty.	Designation	Part no. Steel	Remark
1	1	Pressure tap Ø 24 x 7,1		
2	1	Primary isolation valve PN 500 with external stem thread both sides with weld end Ø 24 x 7,1	S340.11.639.35	
3a	1	Condensation pot size 4, nominal content 250 cm³ both sides with weld end Ø 24 x 7,1	S007.51.653.01	
3b	1	Condensation pot, nominal content 15 cm³ both sides with weld end Ø 24 x 7,1	S007.51.600.26	
4	1	Reducer Ø 24 x 7,1 / Ø 14 x 2,5	S006.40.630.04	
5	1	Primary isolation valve PN 500 with external stem thread Ø 24 x 7,1 / Ø 14 x 2,5	S340.11.636.40	
6	2	Impulse line Ø 14		
7a	1	Manifold combination PN 400 DN 8 Ø 14 x 2,5 / tube fitting 14S	N541.87.135.01	
7b	1	Manifold combination PN 400 DN 8 with test connection M 20 x 1,5 Ø 14 x 2,5 / tube fitting 14S	N541.87.135.51	
8	2	Blow-off line		
9	1	Accessory kit consisting of: screws, washers and seal rings	catalogue page 8.00 - see appendix A1	
10	1	Instrument		

© This drawing is the exclusive property of ARMATURENFABRIK FRANZ SCHNEIDER GmbH & Co. KG. Without their consent it may not be reproduced or given to third parties.

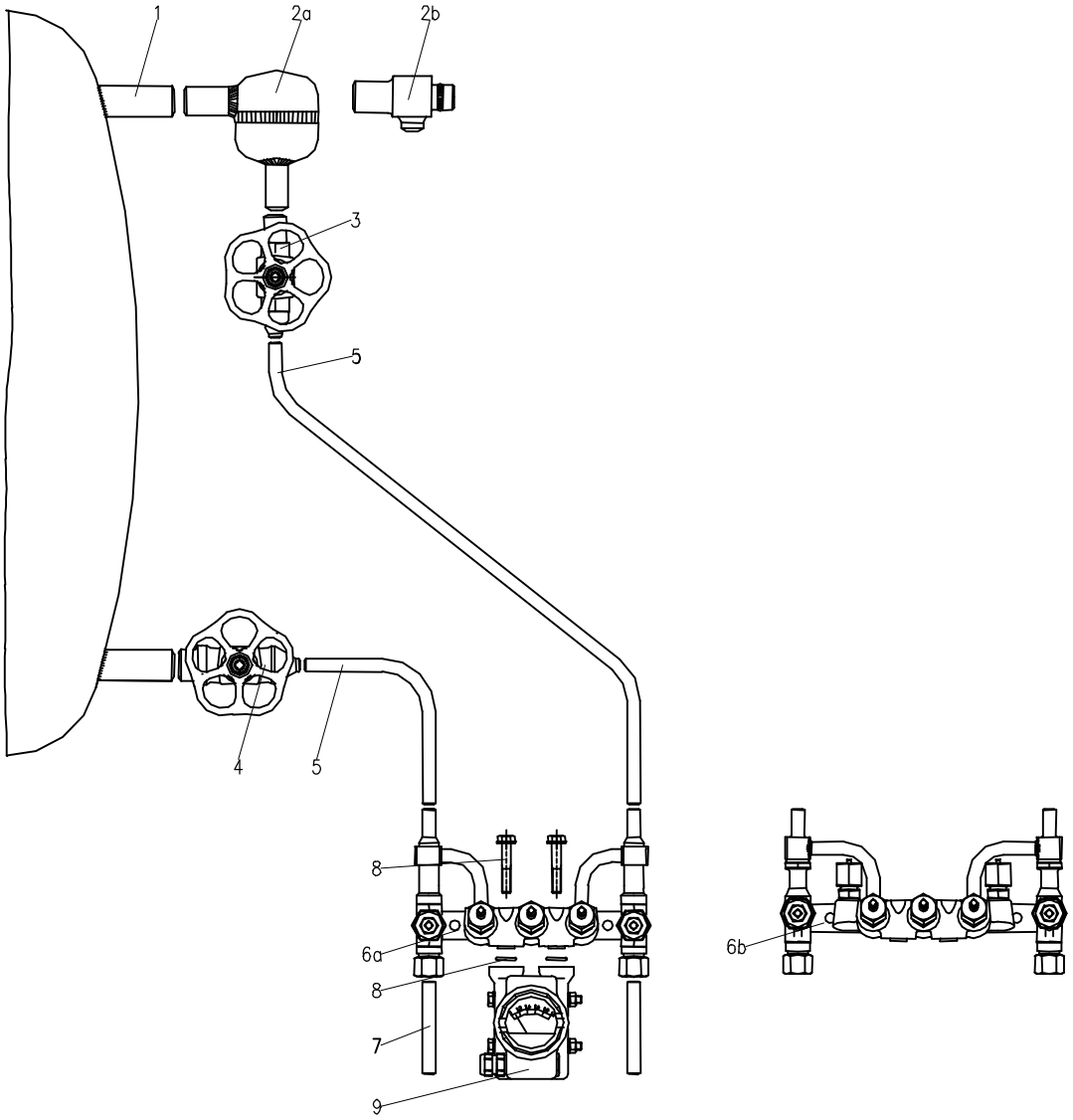

Pos.	Qty.	Designation	Part no. Steel	Remark
1	1	Pressure tap Ø 33,7 x 4,5		
2a	1	Condensation pot size 4, nominal content 250 cm³ Ø 33,7 x 4,5 / Ø 24 x 7,1	S007.51.653.06	
2b	1	Condensation pot, nominal content 15 cm³ Ø 33,7 x 4,5 / Ø 24 x 7,1	S007.51.780.01	
3	1	Primary isolation valve PN 500 with external stem thread Ø 24 x 7,1 / Ø 14 x 2,5	S340.11.636.40	
4	1	Primary isolation valve PN 320 with external stem thread Ø 33,7 x 4,5 / Ø 14 x 2,5	S381.40.715.24	
5	2	Impulse line Ø 14		
6a	1	Manifold combination PN 400 Ø 14 x 2,5 / tube fitting 14S	N541.37.135.01	
6b	1	Manifold combination PN 400 with test connection M 20 x 1,5 Ø 14 x 2,5 / tube fitting 14S	N541.37.135.51	
7	2	Blow-off line		
8	1	Accessory kit consisting of: screws, washers and seal rings	catalogue page 8.00 - see appendix A1	
9	1	Instrument		

© This drawing is the exclusive property of ARMATURENFABRIK FRANZ SCHNEIDER GmbH & Co. KG. Without their consent it may not be reproduced or given to third parties.

SCHNEIDER Armaturen	**Hook-up:** **Level Measurement** **Condition of Fluid:** **Steam** **Max. Operating Pressure:** **PB 250 bar**	F04 01/02

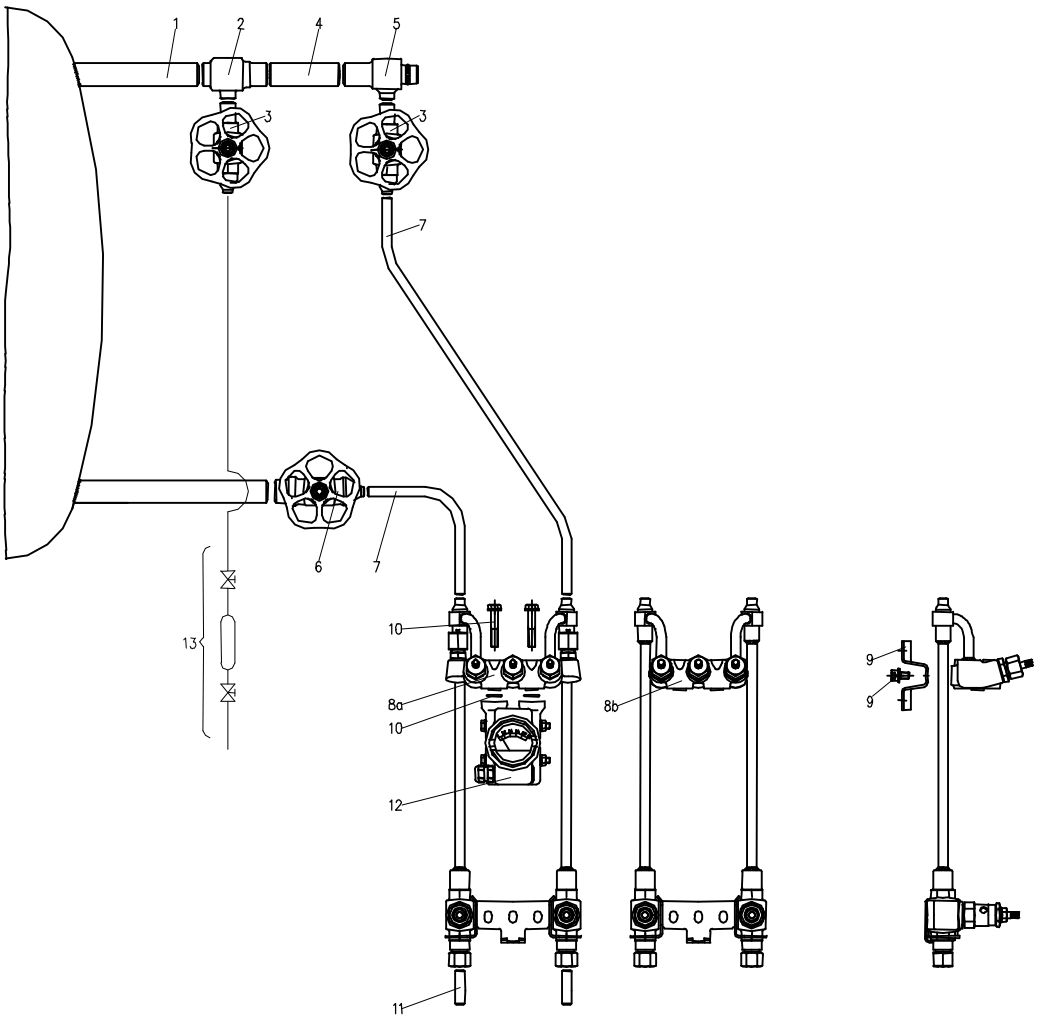

Pos.	Qty.	Designation	Part no. Steel	Remark
1	1	Pressure tap Ø 33,7 x 4		
2	1	Tee Ø 33,7 x 4 / Ø 21,3 x 3,6 / Ø 33,7 x 4	S006.40.780.01	
3	2	Primary isolation valve PN 400 with external stem thread Ø 21,3 x 3,6 / Ø 14 x 2,5	S340.11.612.02	
4	1	Pipe adaptor Ø 33,7 x 4		
5	1	Condensation pot size 4, nominal content 250 cm³ Ø 33,7 x 4 / Ø 21 x 3,6	S007.51.600.15	
6	1	Primary isolation valve PN 320 with external stem thread Ø 33,7 x 4,5 / Ø 14 x 2,5	S381.40.715.24	
7	2	Impulse line Ø 14		
8a	1	Manifold combination PN 400 DN 8 Ø 14 x 2,5 / tube fitting 14S	N541.77.135.01	
8b	1	Manifold combination PN 400 DN 8 with test connection M 20 x 1,5 Ø 14 x 2,5 / tube fitting 14S	N541.77.135.51	
9	1	Accessory kit consisting of: mounting bracket, screws and washers	S006.42.100.02	
10	1	Accessory kit consisting of: screws, washers and seal rings	catalogue page 8.00 - see appendix A1	
11	2	Blow-off line		
12	1	Instrument		
13	1	Bubbling-through equipment		

© This drawing is the exclusive property of ARMATURENFABRIK FRANZ SCHNEIDER GmbH & Co. KG. Without their consent it may not be reproduced or given to third parties.

ACCESSORY KIT

for manifolds and multi-way cocks to be direct mounted to transmitters according to DIN 19 213 / IEC 61518

P = Accessory kit with PTFE flat gasket according to DIN 19 213 (IEC)* - PN 100 (PN 420)*
V_1 = Accessory kit with FPM O-ring according to DIN 19 213 - PN 160
V_2 = Accessory kit with FPM O-ring according to DIN 19 213 (IEC)* - PN 400 (PN 420)*
Accessory kits free of oil and lubricant for oxygen service on request

	7/16 - 20 UNF		M 10	
	Hexagon head cap screw acc. to ANSI B 18.2.1 property class 8.8	**Socket head cap screw** acc. to ANSI B 18.3 property class 12.9	**Hexagon head cap screw** property class 8.8	**Socket head cap screw** property class 8.8
2 valve manifold S341.34... S541.34...		**P: S006.36.134.05** **V_2: S006.56.134.15** 2 Screws 7/16-20 UNFx55 2 Washers 1 Seal ring made of PTFE or FPM		**P: S006.35.134** **V_1: S006.45.134.10** 2 Screws M 10 x 55 2 Washers 1 Seal ring made of PTFE or FPM
3 valve manifold N341.35... / S341.36... N541.35... / S541.36... N341.85... / 86... N541.85... / 86... **5 valve manifold** S341.38... S541.38... **Manifold combination** N541.37... N541.77... / 87...	**P: S006.38.136.02** **V_2: S006.58.136.12** 4 Screws 7/16-20 UNFx2 1/8" 4 Washers 2 Seal rings made of PTFE or FPM	**P: S006.36.136.07** **V_2: S006.56.136.17** 4 Screws 7/16-20 UNFx55 4 Washers 2 Seal rings made of PTFE or FPM	**P: S006.37.136** **V_1: S006.47.136.10** 4 Screws M 10 x 55 4 Washers 2 Seal rings made of PTFE or FPM	**P: S006.35.136.01** **V_1: S006.45.136.11** 4 Screws M 10 x 55 4 Washers 2 Seal rings made of PTFE or FPM
2 valve manifold N542.44.180.01 N542.44.480.01	**P: S006.38.134.65*** **V_2: S006.58.134.65*** 2 Screws 7/16-20 UNFx1 3/4" 1 Seal ring made of PTFE or FPM	**P: S006.36.134.65*** **V_2: S006.56.134.65*** 2 Screws 7/16-20 UNFx1 3/4" 1 Seal ring made of PTFE or FPM	**P: S006.37.134.65** **V_2: S006.57.134.65** 2 Screws M 10 x 45 1 Seal ring made of PTFE or FPM	**P: S006.35.134.65** **V_2: S006.55.134.65** 2 Screws M 10 x 45 1 Seal ring made of PTFE or FPM
3 valve manifold N542.39.191.01 N542.39.491.01	**P: S006.38.139.61*** **V_2: S006.58.139.61*** 4 Screws 7/16-20 UNFx2 5/8" 4 Seal rings made of PTFE or FPM	**P: S006.36.139.61*** **V_2: S006.56.139.61*** 4 Screws 7/16-20 UNFx2 5/8" 4 Seal rings made of PTFE or FPM	**P: S006.37.139.61** **V_2: S006.57.139.61** 4 Screws M 10 x 65 4 Seal rings made of PTFE or FPM	**P: S006.35.139.61** **V_2: S006.55.139.61** 4 Screws M 10 x 65 4 Seal rings made of PTFE or FPM
	Remark: Accessory kit only in connection with 2 oval flanges or 1 flange adaptor (see catalogue page 8.10)			
3 valve manifold N542.46... / 47... Connection transmitter / manifold	**P: S006.38.136.01*** **V_2: S006.58.136.01*** 4 Screws 7/16-20 UNFx1" 2 Seal rings made of PTFE or FPM	**P: S006.36.136.01*** **V_2: S006.56.136.01*** 4 Screws 7/16-20 UNFx1" 2 Seal rings made of PTFE or FPM		
Connection manifold / process side	**P: S006.38.136.05** **V_2: S006.58.136.05** 4 Screws 7/16-20 UNFx1 1/2" 2 Seal rings made of PTFE or FPM	**P: S006.36.136.08** **V_2: S006.56.136.08** 4 Screws 7/16-20 UNFx1 1/2" 2 Seal rings made of PTFE or FPM		
	Remark: Accessory kit only in connection with 2 oval flanges or 1 flange adaptor (see catalogue page 8.10)			
3 valve manifold N542.39.181.01 N542.39.481.01 **5 valve manifold** N542.48...	**P: S006.38.136.66*** **V_2: S006.58.136.66*** 4 Screws 7/16-20 UNFx1 3/4" 2 Seal rings made of PTFE or FPM	**P: S006.36.136.66*** **V_2: S006.56.136.66*** 4 Screws 7/16-20 UNFx1 3/4" 2 Seal rings made of PTFE or FPM	**P: S006.37.136.66** **V_2: S006.57.136.66** 4 Screws M 10 x 45 2 Seal rings made of PTFE or FPM	**P: S006.35.136.66** **V_2: S006.55.136.66** 4 Screws M 10 x 45 2 Seal rings made of PTFE or FPM
Multi-way cock S345.06...	**P: S006.38.106** 4 Screws 7/16-20 UNFx1" 4 Washers 2 Seal rings made of PTFE	**P: S006.36.106.02** 4 Screws 7/16-20 UNFx1" 4 Washers 2 Seal rings made of PTFE	**P: S006.37.106** 4 Screws M 10 x 25 4 Washers 2 Seal rings made of PTFE	**P: S006.35.106.01** 4 Screws M 10 x 25 4 Washers 2 Seal rings made of PTFE

© This drawing is the exclusive property of ARMATURENFABRIK FRANZ SCHNEIDER GmbH & Co. KG. Without their consent it may not be reproduced or given to third parties.