RESERVE COPY

[Second Edition.]

PATENT SPECIFICATION

Application Date: April 21, 1922. No. 11,276/22.

194,963

Complete Accepted: March 22, 1923.

COMPLETE SPECIFICATION.

Improvements in Vacuum Cleaning and Dusting Apparatus.

I, GUSTAV OSCAR LEHMANN, a citizen of the United States of America, of Seestrasse 44, Berlin, N., Germany, do hereby declare the nature of this invention and in what manner the same is to be performed, to be particularly described and ascertained in and by the following statement:—

Portable vacuum dusting and cleaning appliances are now largely used in preference to stationary appliances for the same purpose, which are expensive to manufacture and operate. In so far as such portable appliances are modelled on the usual type of stationary appliance, differing only in that apparatus can be carried or wheeled about, the saving effected is not great and the appliances are unwieldly. Moreover, they have hitherto been found in practice to be less efficient, or at least to require considerable exertion for producing satisfactory results, needing both hands of an adult operator to manipulate them.

The object of my invention is to provide a portable vacuum cleaner, comprising in a casing an electromotor, a centrifugal fan, and a dust bag, having the following advantages:—

1. Facility of manipulation, so that it can be handled by a child if desired.
2. Compactness, enabling it to operate under and behind chairs and like furniture.
3. Favorable distribution of weight.
4. Efficient suction, equal to that of stationary appliances.

To this end I fix to the motor frame a handle of the usual arched type, with one of its ends joined to the frame in line with the motor axis, or approximately so, and the other end abutting radially against the frame near the centre of gravity of the appliance. To save weight, I use a light casing, which has no heavy portion of the apparatus to carry, but is itself carried by the motor frame, and tapers towards the nozzle.

An appliance embodying the invention is shown in the annexed drawings, in which

Fig. 1 is a longitudinal section of the same, and

Fig. 2 a cross section on the line II—II of Fig. 1.

Fig. 3 is a sectional view, showing the apparatus packed in a case for conveyance, and

Fig. 4 is a section on the line IV—IV of Fig. 3.

Figs. 5 and 6 are views showing the apparatus in position for use.

The shaft of the electromotor 7 has bearings at 9 and 10 in a frame 8, which comprises a circular part 11 surrounding the motor and supporting the same near the centre of gravity of the appliance. Upon the motor shaft 12 there is mounted a two stage centrifugal fan 13, so that this fan is also supported by the frame 8. The arched handle 14 has one of its ends, designated 15, fixed at 16 to the frame 8, in the longitudinal axis of the appliance. The other end of the handle, designated 17, abuts radially against the circular frame part 11, and is fixed to the same by means of rivets, bolts or the like 18 (Fig. 2). The handle, motor and fan are thus combined to form a structure which supports the casing 19 of the appliance, which has a cap 20 at the end of a tapering part 21 enclosing the dust bag 22. As the casing 19, 21 has no heavy portions of the apparatus to support, and more particularly no rotating, vibrating portions, it can be made of light and thin material, for example sheet aluminium. Thus a considerable saving of weight is effected, and the centre of gravity is near the rear end, which is of considerable advantage in manipulating the appliance.

Various methods of joining the handle

[Price 1/-]

to the motor frame may be adopted, the important feature being that the handle is not, as heretofore, joined to a casing supporting the motor and fan, but is joined to the motor frame, which supports the casing.

The cap 20 is fixed by means of a coarse screw thread or bayonet joint, and makes a tight joint around the mouth of the dust bag. It has an inwardly directed coned socket 22*a*, adapted to receive the shank of the nozzle 23 (Fig. 5) or alternatively a tube 24 (Fig. 6) having at its forward end a socket 25 for the nozzle 23. The tube 24 may be fitted to the appliance for cleaning carpets and articles beyond ordinary reach; it is, for example, very convenient for cleaning the floor under articles of furniture, in the manner illustrated in Fig. 6. For cleaning upholstery, cushions and the like this tube will generally be dispensed with, the nozzle being fitted to the socket 22*a* as shown in Fig. 5.

As the handle is near the centre of gravity the appliance can easily be manipulated with one hand, leaving the other hand free for using a brush or shifting furniture or the like.

The motor is served in the usual way by means of a cable from a wall plug or lamp socket or the like, a switch being provided on the handle.

When not in use, and especially for conveyance, the apparatus can be packed in the box 26 (Figs. 3 and 4). On the floor of this box there are cradles 27 for the casing. The handle 14 abuts against the lid 28. Holders 28[1] for nozzles 23 of different shapes and sizes are provided on the floor. The cable 29 is coiled in a pocket 31 fixed to the lid, and the latter also has sockets 30 for the tube 24. Holders for an oil can, oil bottle and screw driver or the like are also provided. A handle 32 is placed approximately over the centre of gravity, so that the box can be carried conveniently.

Having now particularly described and ascertained the nature of my said invention and in what manner the same is to be performed, I declare that what I claim is:—

1. A portable vacuum dusting and cleaning apparatus comprising an electromotor, a centrifugal fan, a dust bag, a casing and an arched handle for manipulating the appliance, characterized in that the handle is fixed directly to the frame of the motor, with one end joined to the frame approximately in line with the motor axis and the other end abutting against the frame radially near the centre of gravity of the appliance.

2. Apparatus as claimed in Claim 1, with the casing mounted on the motor frame and tapering towards the nozzle.

3. Apparatus as claimed in Claim 1, including in combination with the casing containing the motor, fan and dust bag an assortment of nozzles, a feed cable, and a suction tube adapted to be fitted to the casing, characterized in that the parts can be easily dissembled for packing them in a box having holders therefor and for accessories such as lubricating appliances and tools.

Dated this 21st day of April, 1922.

For the Applicant,
HERBERT HADDAN & Co.,
Chartered Patent Agents,
31 and 32, Bedford Street, Strand,
W.C. 2, London.

Abingdon: Printed for His Majesty's Stationery Office, by Burgess & Son.
[Wt. 123A.—50/7/1931.]

2nd Edition

[This Drawing is a reproduction of the Original on a reduced scale.]

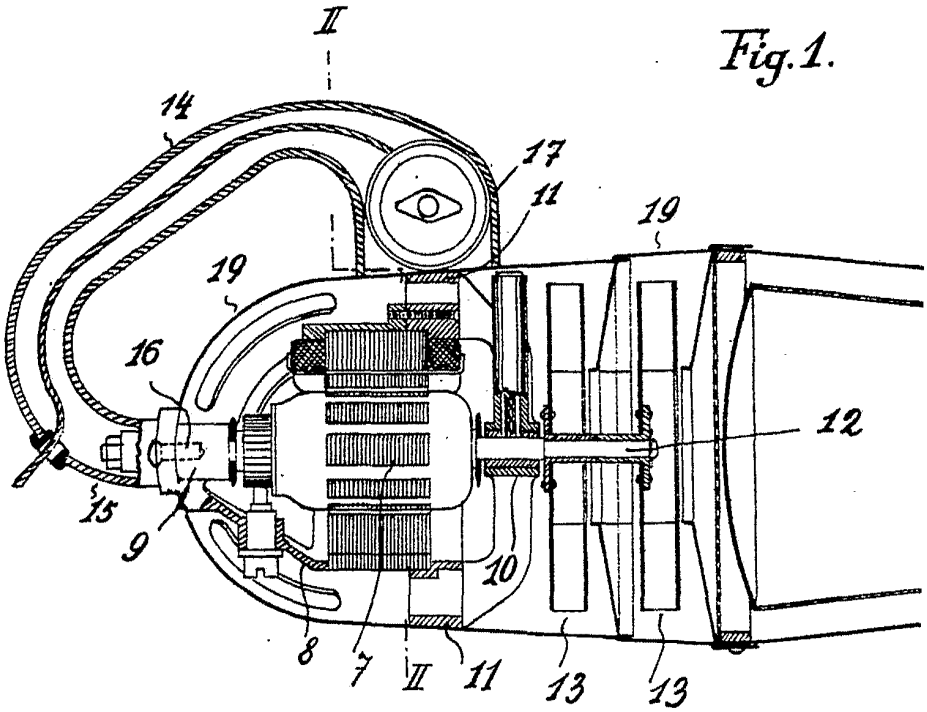

Fig. 1.

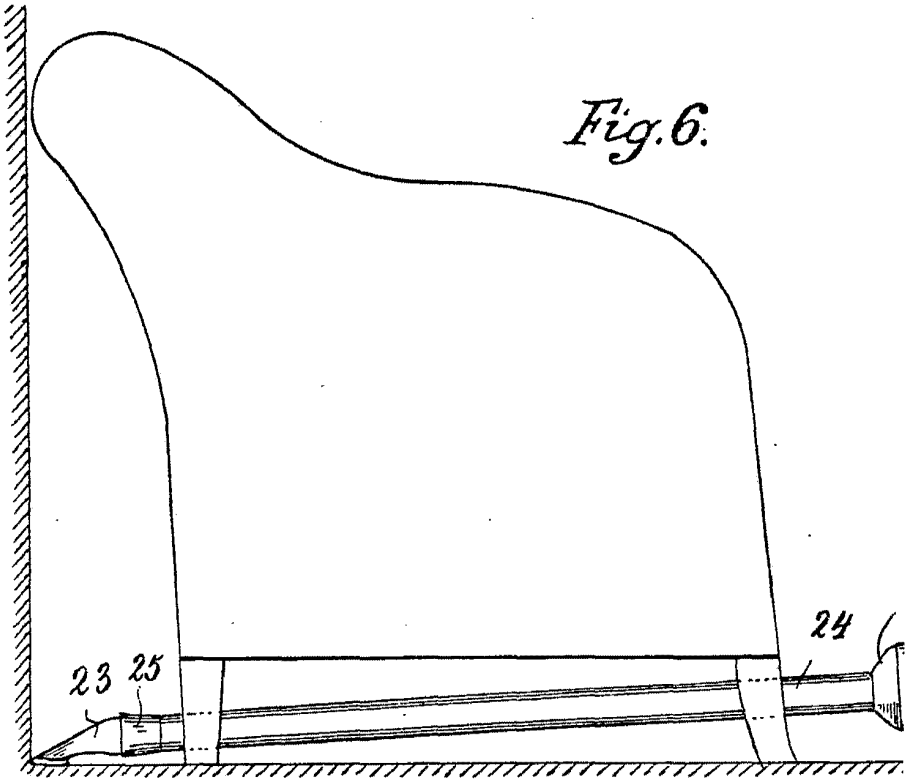

Fig. 6.

Fig. 1.

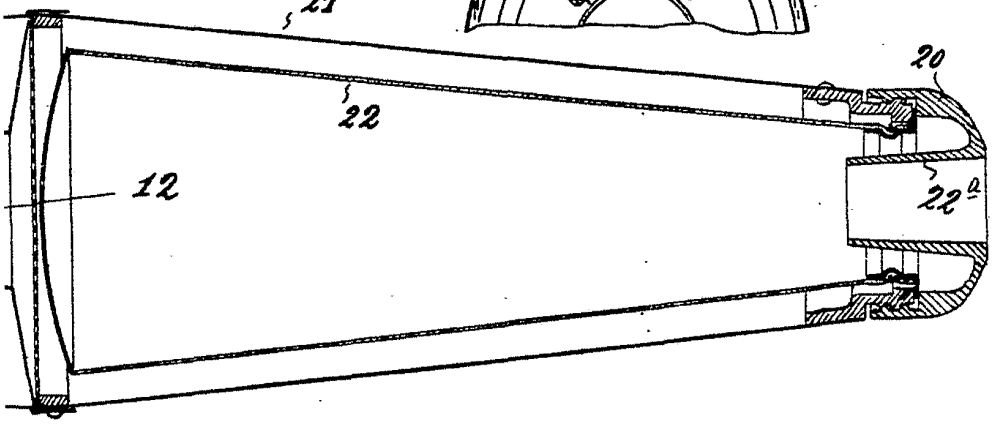

Fig. 2.

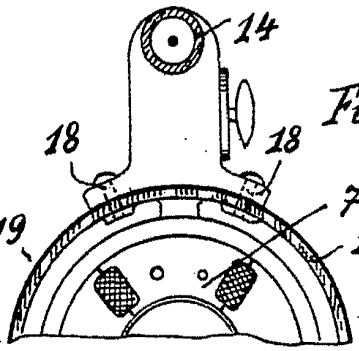

6.

Fig. 5.

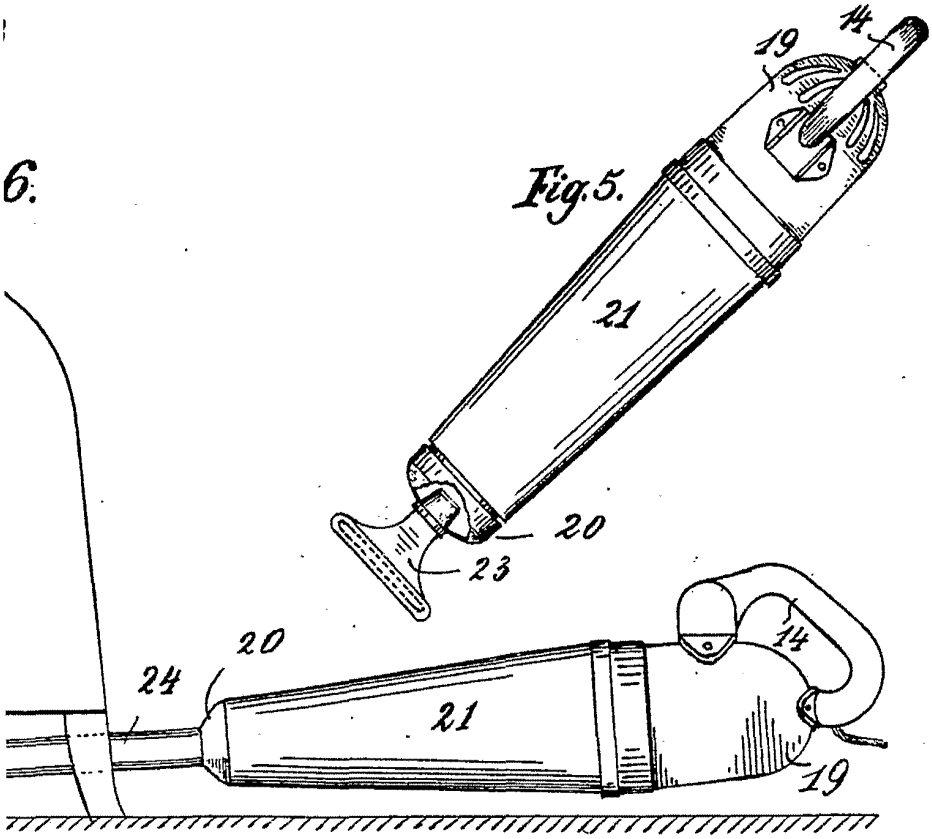

Charles & Read Ltd. Photo Litho.

194,963 COMPLETE SPECIFICATION

2nd Edition

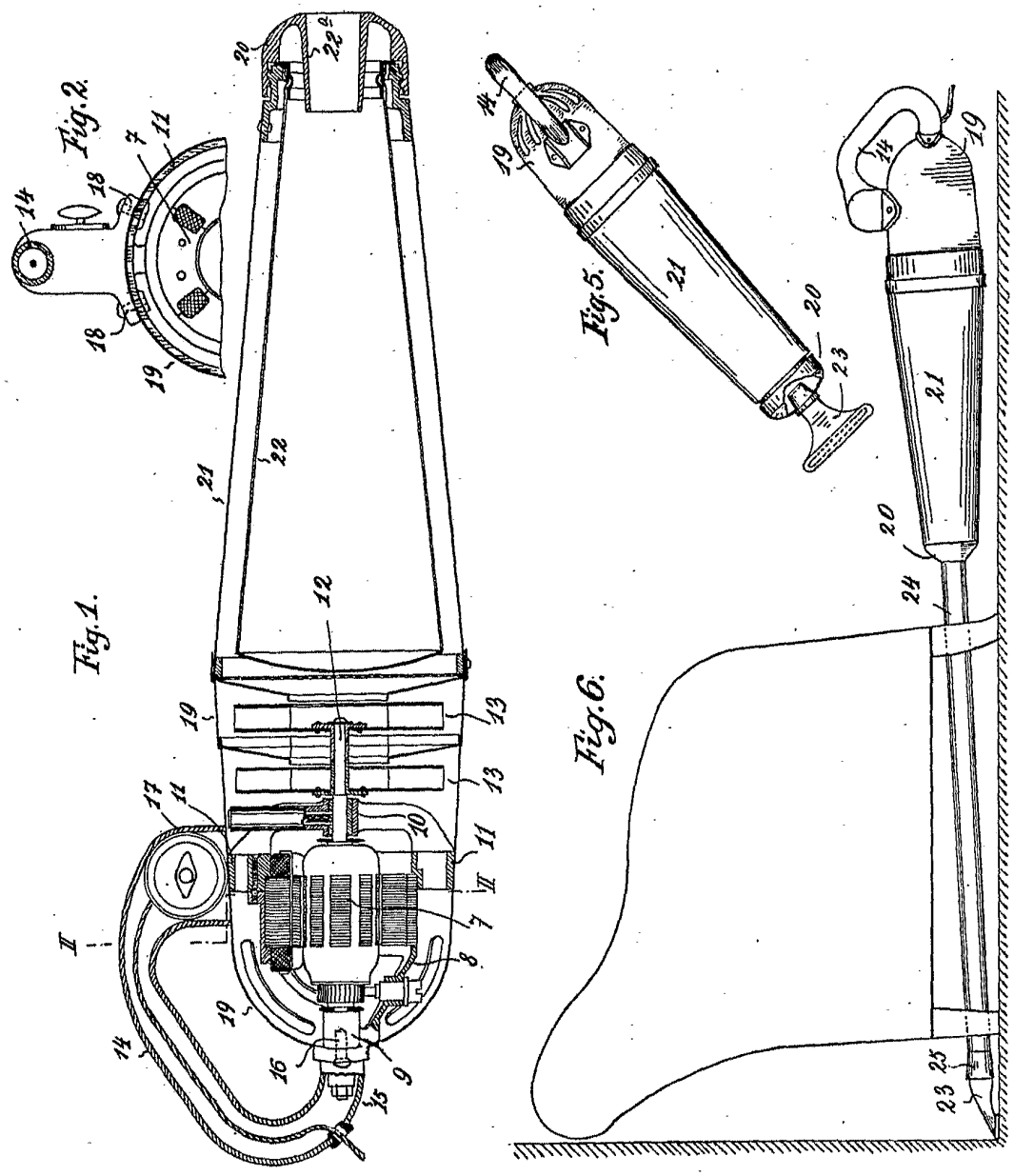

Charles & Read Ltd. Photo Litho.

[This Drawing is a reproduction of the Original on a reduced scale]

2nd Edition

[This Drawing is a full-size reproduction of the Original]

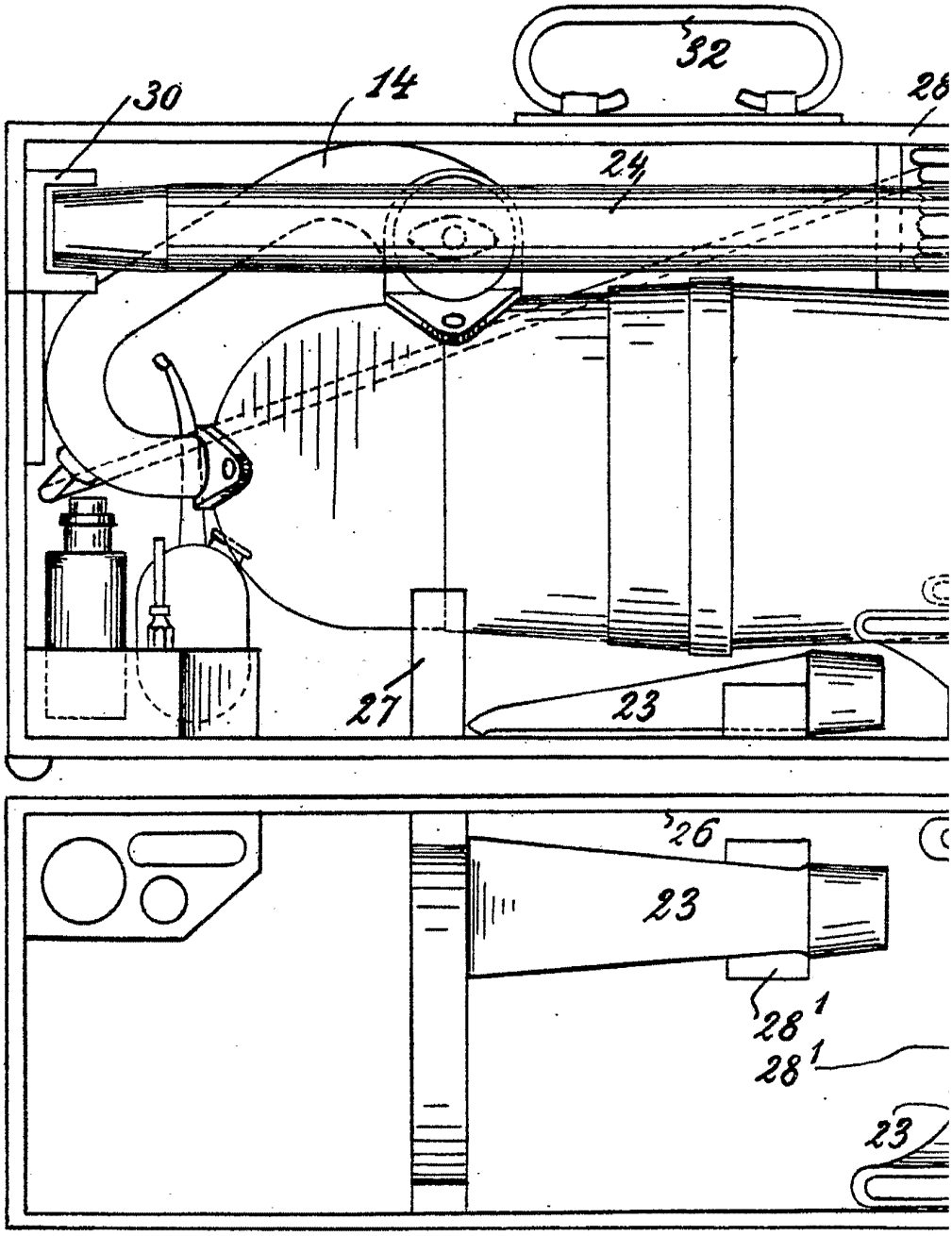

Fig.4.

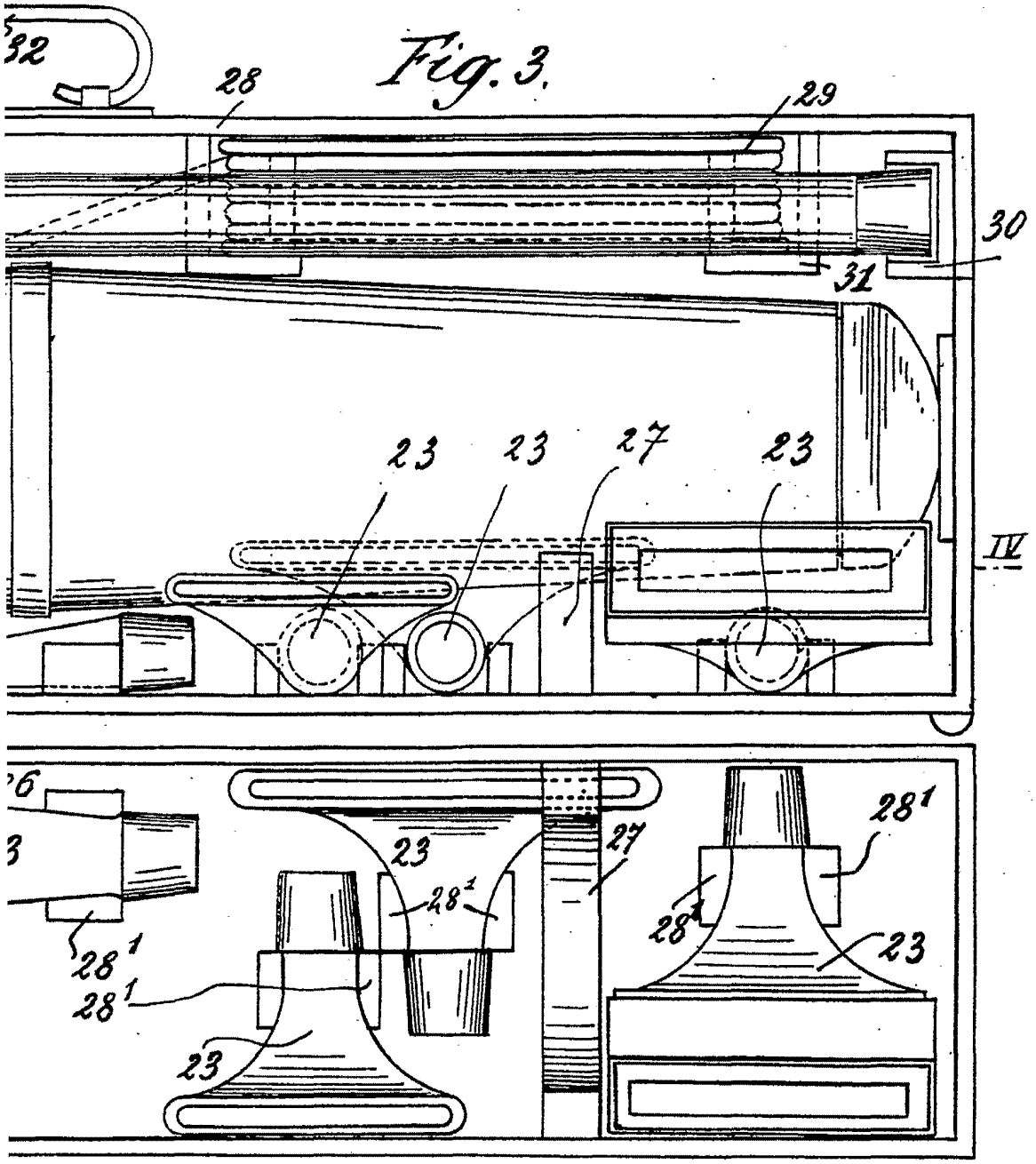

Charles & Read Ltd Photo Litho
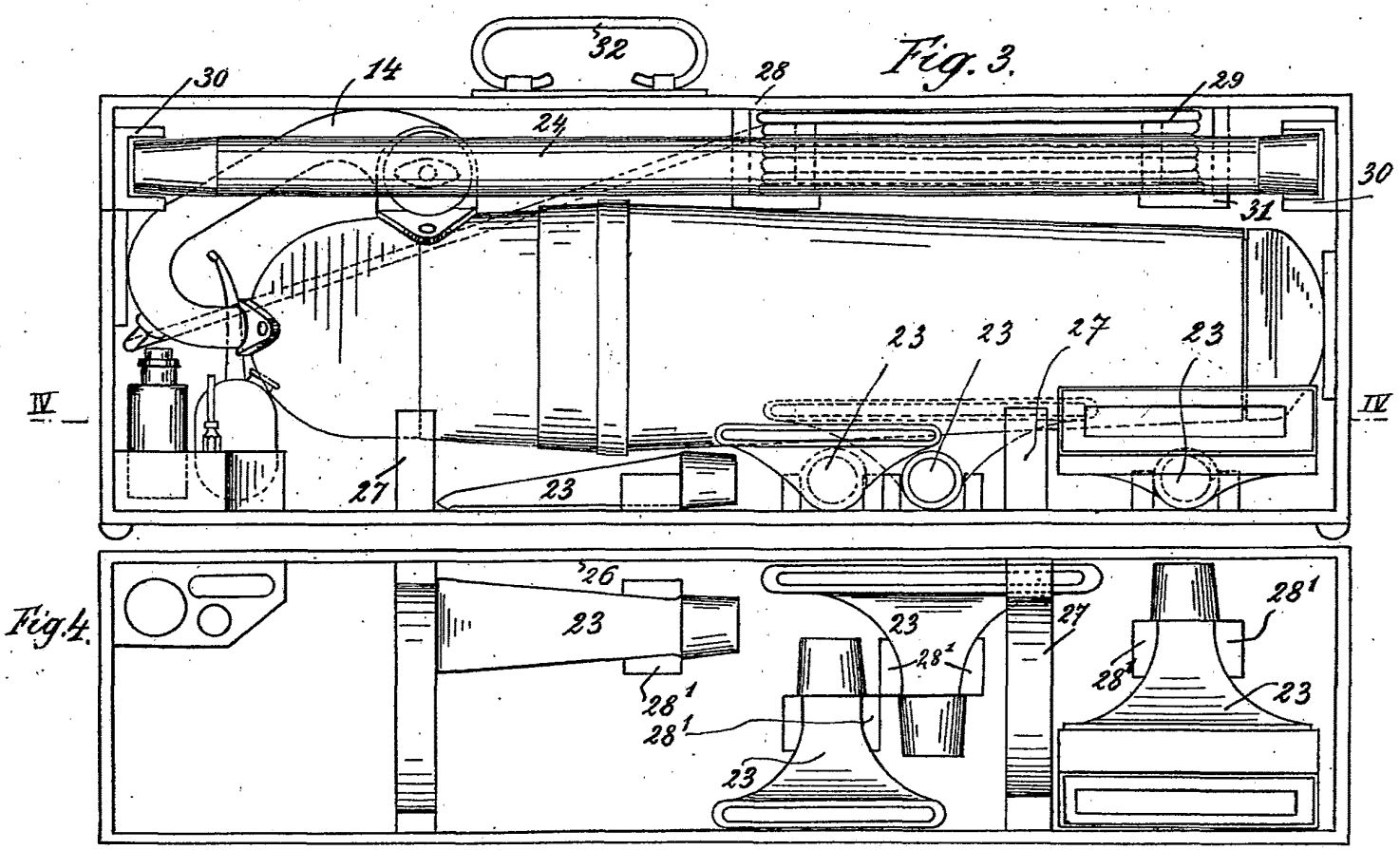
[This Drawing is a full-size reproduction of the Original]