UNITED STATES PATENT AND TRADEMARK OFFICE

---

**BEFORE THE PATENT TRIAL AND APPEAL BOARD**

---

DYSON TECHNOLOGY LIMITED AND DYSON, INC.,
Petitioners,

v.

OMACHRON INTELLECTUAL PROPERTY INC.,
Patent Owner.

---

Case No. IPR2024-_____

**U.S. PATENT NO. 10,478,030**

---

**PETITION FOR *INTER PARTES* REVIEW**

## TABLE OF CONTENTS

**I. INTRODUCTION ..... 1**

**II. STANDING (§42.104(a)) ..... 2**

**III. RELIEF REQUESTED (§42.104(b)) ..... 2**

**IV. OVERVIEW OF THE '030 Patent ..... 3**

A. The Specification ..... 3

B. The Prosecution History ..... 4

**V. OVERVIEW OF PRIOR ART ..... 5**

A. Butler ..... 5

B. Peter ..... 6

C. Neroni ..... 7

D. Lehmann ..... 8

**VI. LEVEL OF ORDINARY SKILL IN THE ART ..... 9**

**VII. CLAIM CONSTRUCTION ..... 9**

**VIII. THE CHALLENGED CLAIMS ARE UNPATENTABLE ..... 10**

A. Ground 1: Butler Anticipates Claims 1-13 ..... 10

1. [1]/[9] ..... 10

2. [2]/[10] ..... 44

3. [3] ..... 46

4. [4]/[11] ..... 47

5. [5]/[12] ..... 48

6. [6] ..... 50

7. [7] ..... 51

8. [8]/[13] .....52

B. Ground 2: Butler Renders Claims 1-13 Obvious .....53

1. Butler Teaches A Single Anticipatory System, But To The Extent PO Argues Otherwise, A POSA Would Have Combined Butler's Teachings.....53

2. Butler Renders Obvious The Hand Vacuum Cleaner (Limitations [1c]/[9c]) .....54

3. Butler Renders Obvious The Electrical Connector And Cable Limitations (Limitations [1b.3]/[9b.3], [1c.iv]/[9c.iv], and Claims 8/13).....55

C. Ground 3: Peter In Combination With Neroni Renders Claims 1-13 Obvious .....57

1. Motivation To Combine Peter And Neroni .....57

2. [1]/[9] .....61

3. [2]/[10] .....81

4. [3] .....83

5. [4]/[11] .....85

6. [5]/[12] .....85

7. [6] .....87

8. [7] .....88

9. [8]/[13] .....89

D. Ground 4: Peter In Combination With Neroni and Lehmann Renders Claims 1-13 Obvious.....91

1. Lehmann Teaches A Handle That Extends Linearly Outwardly From A Sidewall Of The Main Body That A POSA Would Have Been Motivated to Incorporate Into Peter (Claims 2 and 10).....91

2. Lehmann Teaches The Suction Motor Is Positioned Rearward Of The Air Treatment Member That A POSA Would Have Been Motivated To Incorporate Into Peter (Claims 5 and 12) ..... 94

**IX. DISCRETIONARY FACTORS FAVOR INSTITUTION ..... 96**

A. §314(a) ..... 96

B. §325(d) ..... 96

**X. MANDATORY NOTICES UNDER 37 C.F.R. §42.8 ..... 100**

A. Real Parties-in-Interest ..... 100

B. Related Matters ..... 100

C. Lead and Backup Counsel, Service, and Power of Attorney ..... 100

**XI. PAYMENT OF FEES UNDER 37 C.F.R. §42.103 ..... 101**

## TABLE OF AUTHORITIES

**Page(s)**

**Cases**

*Advanced Bionics, LLC v. MED-EL Elektromedizinische Geräte GmbH*,
IPR2019-01469, Paper 6 (PTAB Feb. 13, 2020).....100

*Apple Inc. v. Fintiv, Inc.*,
IPR2020-00019, Paper 11 (PTAB Mar. 20, 2020)..... (96, 97, 98

*Dish Network v. Broadband iTV*,
IPR2020-01280, Paper 17 (PTAB Feb. 4, 2021).....97

*Fusion Orthopedics, LLC v. Extremity Medical, LLC*,
IPR2023-00894, Paper 15 (PTAB Nov. 17, 2023).....99

*General Plastics Indus. Co., Ltd. v. Canon Kabushiki Kaisha*,
IPR2016-01357, Paper 19 (PTAB Sept. 6, 2017).....99

*iRobot Corp. v. SharkNinja Operating LLC et al.*,
19-cv-12125 (D. Mass.) (holding a *Markman* hearing on August 6, 2020 and issuing a *Markman* order on January 14, 2021) .....98

*Samsung Electronics Co., Ltd. et al v. Staton Techiya, LLC*,
IPR2022-00302, Paper 13 (PTAB Jun. 11, 2022) .....98

*SharkNinja Operating LLC v. Dyson, Inc.*,
No. 1:23-cv-12372 (D. Mass.).....1, 1, 100

*TSMC Ltd. v. Alidouble, Inc.*,
IPR2023-00372, Paper 7 (PTAB July 13, 2023) .....97

*Wellman, Inc. v. Eastman Chem. Co.*,
642 F.3d 1355 (Fed. Cir. 2011) .....9

**Statutes**

35 U.S.C. §311 .....2

**Page(s)**

**Other Authorities**

37 C.F.R. §42.8 ..... 100

37 C.F.R. § 42.10(b) ..... 101

37 C.F.R. § 42.24 ..... 1

37 C.F.R. §42.100(b) ..... 9

37 C.F.R. §42.103 ..... 101

## LIST OF EXHIBITS

| Exhibit No. | Description |
|---|---|
| Ex1001 | U.S. Patent No. 10,478,030 ("'030 Patent") |
| Ex1002 | Declaration of Robert Giachetti |
| Ex1003 | *Curriculum Vitae* of Robert Giachetti |
| Ex1004 | File History Excerpt of U.S. 10,478,030 (App. No. 16/156,006) |
| Ex1005 | PCT Publication No. 2007/084543 to Butler et al. ("Butler") |
| Ex1006 | Swiss Patent No. CH203,675 to Peter ("PeterCH") |
| Ex1007 | Certified English translation of Swiss Patent No. CH203,675 to Peter ("Peter") |
| Ex1008 | U.S. Patent No. 4,473,923 to Neroni et al. ("Neroni") |
| Ex1009 | U.S. Patent Publication No. 2006/0026788 to Fischer et al. ("Fischer") |
| Ex1010 | U.K. Patent No. GB194,963 to Lehmann ("Lehmann") |
| Ex1011 | United States District Courts — National Judicial Caseload Profile https://www.uscourts.gov/sites/default/files/data_tables/fcms_na_distprofile1231.2023.pdf |
| Ex1012 | The Parties' Revised Proposed Schedule in *SharkNinja Operating LLC v. Dyson, Inc.*, No. 1:23-cv-12372 (D. Mass.) |
| Ex1013 | Plaintiffs' Infringement Contentions in *SharkNinja Operating LLC v. Dyson, Inc.*, No. 1:23-cv-12372 (D. Mass.) |
| Ex1014 | Petitioners' Stipulation |

## LIST OF CHALLENGED CLAIMS

| Reference Number | Claim Limitation |
|---|---|
| **Claim 1** | |
| [1pre] | A surface cleaning apparatus comprising: |
| [1a] | a surface cleaning head having a front end, a rear end, a dirt air inlet and a cleaning head air outlet; |
| [1b.1] | a rigid air flow conduit having a rigid wand inlet end having an air inlet in communicable with the cleaning head air outlet, a rigid wand outlet end and a longitudinally extending conduit axis |
| [1b.2] | the rigid air flow conduit is moveably mountable to the surface cleaning head between an upright position and an in-use floor cleaning position in which the rigid air flow conduit extends at an angle to the vertical, |
| [1b.3] | the rigid wand outlet end having an air outlet and an outlet end electrical connector; and, |
| [1c] | a hand vacuum cleaner removably mountable to the rigid wand outlet end, the hand vacuum cleaner having a front end and a rear end, the hand vacuum cleaner comprising: |
| [1c.i] | a main body comprising a handle and a suction motor and fan assembly, the suction motor and fan assembly having a suction motor axis of rotation, the handle having a hand grip portion; |
| [1c.ii] | an air treatment member provided at the front end of the hand vacuum cleaner, the air treatment member having a central longitudinal axis and an air treatment chamber having a front wall; |
| [1c.iii] | a hand vacuum cleaner air inlet centrally positioned with respect to the air treatment chamber front wall and releasably connectable with the air outlet of the rigid wand; and, |
| [1c.iv] | a hand vacuum cleaner electrical connector provided on the front end of the air treatment member adjacent the hand vacuum cleaner air inlet, the hand vacuum cleaner electrical connector is releasably connectable with the outlet end electrical connector, |
| [1c.iv.1] | wherein, when the hand vacuum cleaner is mounted to the rigid wand outlet end, the longitudinally extending conduit axis extends in a same direction as the central longitudinal axis, and |
| [1c.iv.2] | wherein the hand grip portion has a hand grip portion axis that intersects the suction motor. |

| Reference Number | Claim Limitation |
|---|---|
| **Claim 2** | |
| [2] | The surface cleaning apparatus of claim 1 wherein the hand grip portion extends linearly outwardly from a sidewall of the main body. |
| **Claim 3** | |
| [3] | The surface cleaning apparatus of claim 1 wherein the rigid air flow conduit is removably mounted to the surface cleaning head. |
| **Claim 4** | |
| [4] | The surface cleaning apparatus of claim 1 wherein the central longitudinal axis intersects that hand grip portion. |
| **Claim 5** | |
| [5] | The surface cleaning apparatus of claim 1 wherein the suction motor and the handle are positioned rearward of the air treatment member. |
| **Claim 6** | |
| [6] | The surface cleaning apparatus of claim 1 wherein the central longitudinal axis extends through the hand vacuum cleaner air inlet. |
| **Claim 7** | |
| [7] | The surface cleaning apparatus of claim 1 wherein, when the hand vacuum cleaner is mounted to the rigid wand outlet end, the longitudinally extending conduit axis extends in the same direction as the central longitudinal axis of the air treatment member. |
| **Claim 8** | |
| [8] | The surface cleaning apparatus of claim 1 wherein the air treatment member has a front face and the hand vacuum cleaner electrical connector is positioned forward of the front face. |
| **Claim 9** | |
| [9pre] | A surface cleaning apparatus comprising: |
| [9a] | a surface cleaning head having a front end, a rear end, a dirt air inlet and a cleaning head air outlet; |
| [9b.1] | a rigid air flow conduit having a rigid wand inlet end having an air inlet in communicable with the cleaning head air outlet, a rigid wand outlet end and a longitudinally extending conduit axis, |
| [9b.2] | the rigid air flow conduit is moveably mountable to the surface cleaning head between an upright position and an in-use floor cleaning position in which the rigid air flow conduit extends at an angle to the vertical, |

| Reference Number | Claim Limitation |
|---|---|
| [9b.3] | the rigid wand outlet end having an air outlet and an outlet end electrical connector; and, |
| [9c] | a hand vacuum cleaner removably mountable to the rigid wand outlet end, the hand vacuum cleaner having a front end and a rear end, the hand vacuum cleaner comprising: |
| [9c.i] | a main body comprising a handle and a suction motor and fan assembly, the suction motor and fan assembly having a suction motor axis of rotation, the handle having a hand grip portion; |
| [9c.ii] | an air treatment member provided at the front end of the hand vacuum cleaner, the air treatment member having a central longitudinal axis; |
| [9c.iii] | a hand vacuum cleaner air inlet provided on the front end of the air treatment member and releasably connectable with the air outlet of the rigid wand, the hand vacuum cleaner air inlet having an inlet axis that is coaxial with the central longitudinal axis; and, |
| [9c.iv] | a hand vacuum cleaner electrical connector provided on the front end of the air treatment member adjacent the hand vacuum cleaner air inlet, the hand vacuum cleaner electrical connector is releasably connectable with the outlet end electrical connector, |
| [9c.iv.1] | wherein, when the hand vacuum cleaner is mounted to the rigid wand outlet end, the longitudinally extending conduit axis extends in a same direction as the central longitudinal axis of the air treatment member, and |
| [9c.iv.2] | wherein the hand grip portion has a hand grip portion axis that intersects the suction motor. |
| **Claim 10** | |
| [10] | The surface cleaning apparatus of claim 9 wherein the hand grip portion extends linearly outwardly from a sidewall of the main body. |
| **Claim 11** | |
| [11] | The surface cleaning apparatus of claim 9 wherein the central longitudinal axis intersects that hand grip portion. |
| **Claim 12** | |
| [12] | The surface cleaning apparatus of claim 9 wherein the suction motor and the handle are positioned rearward of the air treatment member. |
| **Claim 13** | |

| Reference Number | Claim Limitation |
|---|---|
| [13] | The surface cleaning apparatus of claim 9 wherein the air treatment member has a front face and the hand vacuum cleaner electrical connector is positioned forward of the front face. |

# I. INTRODUCTION

The ’030 Patent “relates to the field of surface cleaning apparatus[es],” and, specifically, to a hand/stick vacuum cleaner configuration. Ex1001, 1:18-22.

The ’030 Patent identifies “limited dirt collection capacity” as a problem with existing hand vacuums and purports to solve this with a “supplemental bin” to “provide enhanced dirt collection capacity.” Ex1001, 1:32-37, 1:47-53. However, its claims do not relate to dirt collection capacity, but instead cobble together well-known configurations and features of vacuum cleaners, none of which purport to solve any problem or provide any technical benefit. That is presumably because Patent Owner (“PO”) drafted these claims—years after the specification was written—in a (failed) attempt to read on Petitioner’s products accused of infringement in the co-pending litigation. *SharkNinja Operating LLC v. Dyson, Inc.*, No. 1:23-cv-12372 (D. Mass.).

However, PO’s mish-mash of claimed configurations are nothing more than well-known arrangements of standard vacuum components such as suction motors, dirt separators, and handles. The prior art in this Petition—none of which was before the Examiner—anticipates and/or renders obvious each and every claim.

## II. STANDING (§42.104(A))

Petitioners certify that the '030 Patent is available for IPR, and that Petitioners are not barred or estopped from requesting IPR to challenge the claims on the grounds herein.

## III. RELIEF REQUESTED (§42.104(B))

Petitioners respectfully request review and cancellation under 35 U.S.C. §311 of claims 1-13 as follows[1]:

| **Prior Art** |
|---|
| PCT Publication No. 2007/084543 ("Butler"); published July 26, 2007; prior art under AIA 102(a)(1), 102(a)(2). |
| Swiss Patent No. 203,675 ("Peter"); published June 16, 1939; prior art under AIA 102(a)(1), 102(a)(2). |
| U.S. Patent No. 4,473,923 ("Neroni"); published October 2, 1984; prior art under AIA 102(a)(1), 102(a)(2). |
| G.B. 194963A ("Lehmann"); published March 22, 1923; prior art under AIA 102(a)(1), 102(a)(2). |

[1] Petitioners do not concede that any claims satisfy other requirements for patentability that cannot be raised in IPR, including §§101 and 112.

| Grounds | Claims | Basis |
|---|---|---|
| 1 | 1-13 | §102; Butler |
| 2 | 1-13 | §103; Butler |
| 3 | 1-13 | §103; Peter and Neroni |
| 4 | 2, 5, 10, 12 | §103; Peter, Neroni, and Lehmann |

## IV. OVERVIEW OF THE '030 PATENT

The '030 Patent, titled "Surface Cleaning Apparatus," issued from U.S. Application No. 16/156,006, filed October 10, 2018 and claims priority to a U.S. provisional application filed on December 17, 2014. Ex1001, Cover.

### A. The Specification

The '030 Patent states that it "relates to a type of stick vacuum cleaner wherein a hand vacuum cleaner is removably mounted to a drive handle and provides motive power to draw dirty air into the surface cleaning head." *Id.* at 1:18-20. Figure 41 illustrates one embodiment of the '030 Patent:

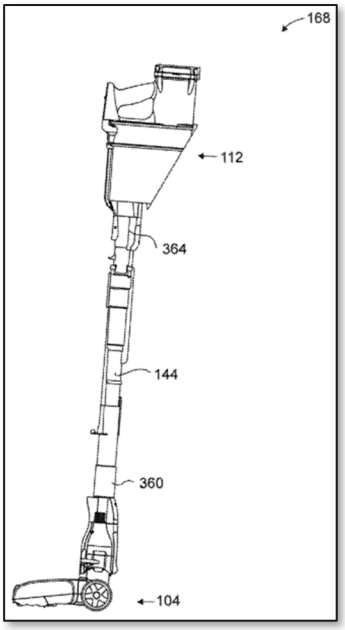


Ex1001, Fig. 41.

**B. The Prosecution History**

The Examiner did not provide reasons for allowing the claims of the '030 Patent, which issued after only one prior art-based rejection. Ex1004, 252-262 (non-final rejection), 279-285 (notice of allowability). The Examiner did find, however, that certain of the claimed features, including a rigid air flow conduit that is removably mounted to the surface cleaning head, "are standard in the art," *id.*, 259, and that others would have been obvious, including "provid[ing] an electrical connection at the front of the handheld cleaner" to operate a powered surface cleaning head, and "modify[ing] [a] handle grip" to "make[] it easier for a user to use the cleaner with the surface cleaning head attached," *id.*, 259-261.

In response to the Examiner's prior art-base rejection, the Applicant argued that the prior art of record failed to teach: (1) a "hand grip portion [that] has a hand grip portion axis that intersects the suction motor," *id.*, 268-269, 273-275; and (2) an "air inlet … [that] is … centrally positioned with respect to an air treatment chamber front wall," *id.*, 272. However, these features—and in fact all of the claimed features—were disclosed in prior art such as Butler that was not before the Examiner, as described below. Ex1002 ¶¶5-6.

## V. OVERVIEW OF PRIOR ART

### A. Butler

Butler is a 2007 PCT publication. Ex1005. Butler teaches "an improved vacuum cleaner for cleaning raised and vertical surfaces" wherein the cleaner comprises a "housing" with a "longitudinal axis," "[a] **fore grip**" with a hand grip portion having a hand grip portion axis that intersects "[a] **vacuum fan and a motor**," and "an **air inlet**" centrally positioned with respect to a "**cyclone separator**" front wall:

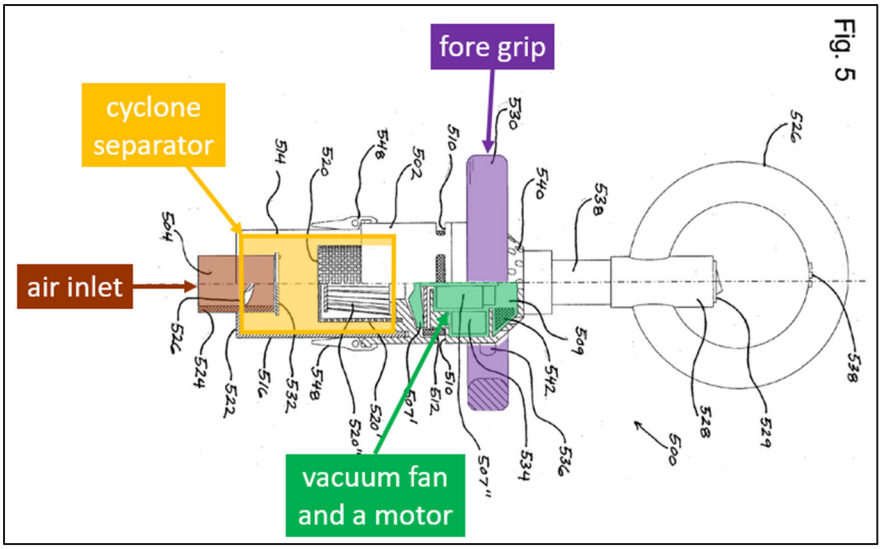


Ex1005 ¶10, Fig. 5. Butler further teaches various attachments that connect to the air inlet. *Id.* at 22:7-9.

**B. Peter[2]**

Peter is a 1939 Swiss patent. Ex1007. Peter teaches a "vacuum cleaner" for cleaning "areas that are difficult to access." *Id.*, 1. Peter's vacuum has a "**housing**," an "**air intake nozzle 13**" centrally positioned with respect to a "**dust filter [17]**" front wall, and an "**exhaust nozzle 10**" "provided with a **rubber grip 9**" that has a hand grip portion axis that intersects "**fan**" and "**motor 11**":

[2] Ex1007 is a certified English translation of Ex1006, originally published in German. Citations to Ex1007 are to the page, as the English translation does not include column or line numbers.

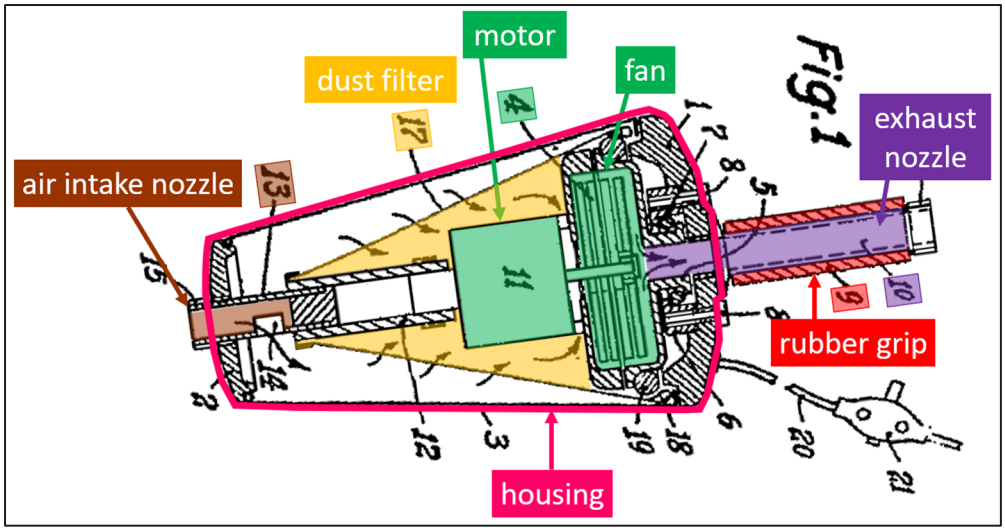


Ex1007, 2, Fig. 1; Ex1002 ¶¶58-59.

Further, Peter teaches a "**suction piece 24**" connected to a "**pipe angle 22**," and an "**extension rod 33**" "between the vacuum cleaner housing and the pipe angle":

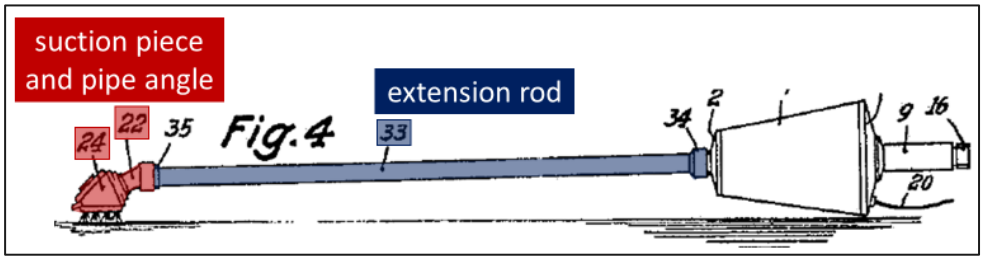


*Id*., 3, Fig. 4; Ex1002 ¶60.

### C. Neroni

Neroni is a published U.S. Patent from 1982. Ex1008. It teaches "vacuum cleaning systems" that "provide electrical continuity" from a wall outlet through the vacuum and to a powered cleaning tool. *Id*., Abstract 1:66-2:2. Neroni has a "**female power receptacle 16**" on the outside surface of a **tank 12**. *Id*. at 3:34-36.

"**[R]eceptacle 16** is used to supply electrical power through the **hose assembly 11** into the **adapter 20**, and then to **motor P** of the power cleaning tool 17." *Id*. at 3:36-39.

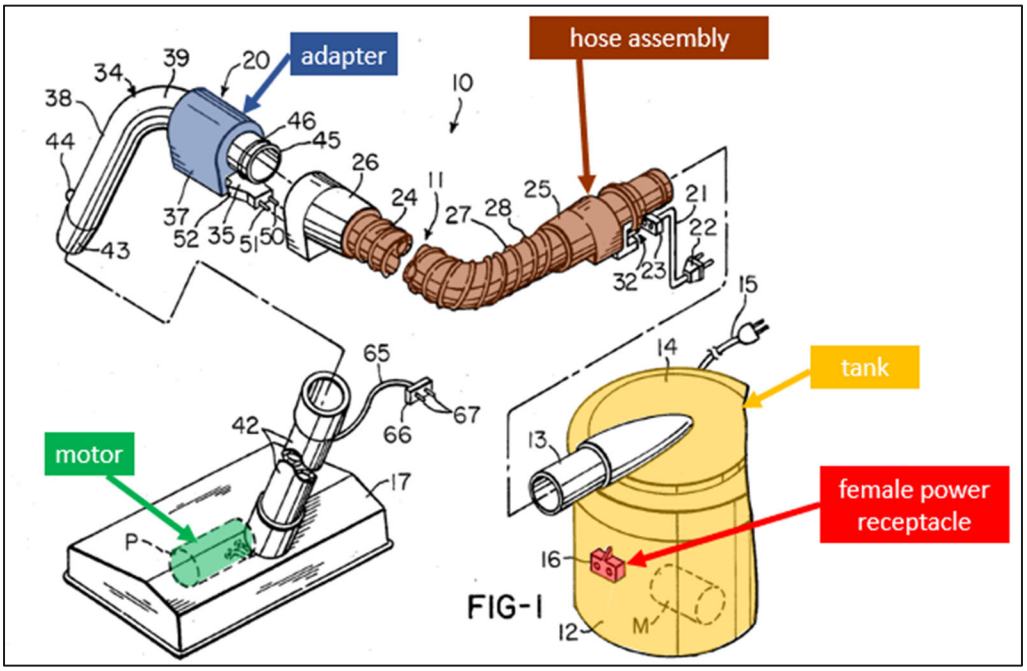


Ex1008, Fig. 1, 3:34-49. Ex1002 ¶¶61-62.

### D. Lehmann

Lehmann is a 1922 U.K patent. Ex1010. Lehmann teaches a portable vacuum cleaner from 1922 with an "**electromotor 7**," a "**dust bag 22**," and an **"arched handle 14**" having an "end [17]" that "abuts radially against the **circular frame part 11**" of the vacuum cleaner main body:

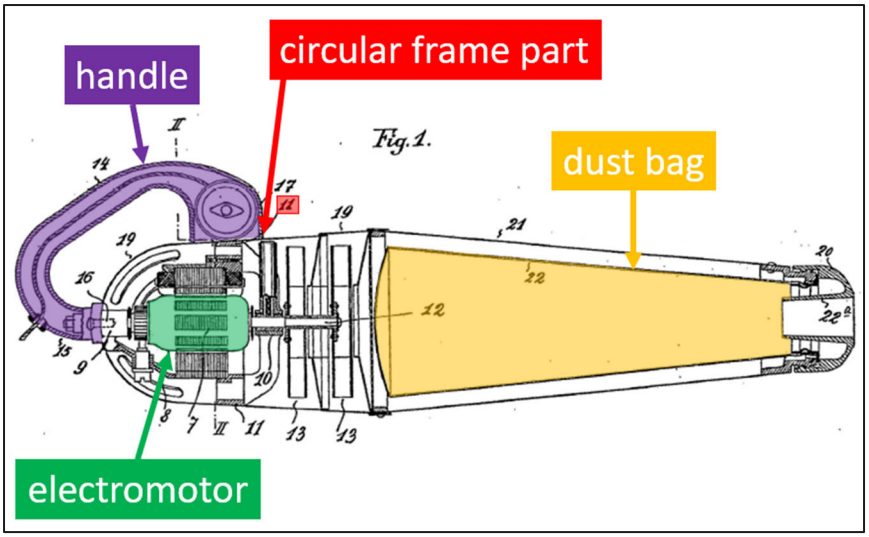


Ex1010, 1:63-67, 1:71-82, Fig. 1; Ex1002 ¶¶63-64.

## VI. LEVEL OF ORDINARY SKILL IN THE ART

A POSA would have had a bachelor's degree in mechanical engineering or a similar field and 2-3 years of experience in machine design, including machines that include fluid dynamics or fluid paths, such as vacuum cleaners. Additional education could offset less experience and vice versa, and a POSA could have also obtained similar knowledge and experience through other means.

## VII. CLAIM CONSTRUCTION

Petitioner is unaware of any "prior claim construction determination" related to the '030 Patent. 37 C.F.R. §42.100(b). "[C]laim terms need only be construed to the extent necessary to resolve the controversy." *Wellman, Inc. v. Eastman Chem. Co.*, 642 F.3d 1355, 1361 (Fed. Cir. 2011) (internal citation omitted). Petitioner does not believe that any claim construction is necessary to resolve the parties'

controversy in this Petition, and the claims should be given their plain and ordinary meaning for purposes of this IPR.[3]

## VIII. THE CHALLENGED CLAIMS ARE UNPATENTABLE

### A. Ground 1: Butler Anticipates Claims 1-13

#### 1. [1]/[9]

##### a. [1pre]/[9pre][4]

To the extent these preambles are limiting, Butler teaches a surface cleaning apparatus. Ex1002 ¶¶70-71. Butler teaches a "vacuum cleaner" for cleaning surfaces such as "floors and carpets," and other "horizontal surfaces" and "vertical surfaces." Ex1005, Title, 7:2-5.

##### b. [1a]/[9a]

Butler teaches these limitations. Ex1002 ¶¶73. Butler teaches a variety of surface cleaning heads: "any type of cleaning device may be attached to the entry tube 524, such as an elongated cleaning head … a crevice tool, a dusting attachment, a so-called powerhead having a rotating agitator … ." Ex1005, 22:7-9. Each of these "cleaning device[s]," including an elongated cleaning head, crevice tool,

---

[3] Petitioner reserves all rights to raise claim construction arguments and other arguments in litigation.

[4] *See* LIST OF CHALLENGED CLAIMS.

dusting attachment, and powerhead are surface cleaning heads because they are at the end of the vacuum and clean surfaces. Ex1002 ¶¶72-73.

Each of these surface cleaning heads has a front and rear end. Ex1002 ¶74. Each of these surface cleaning heads has a front and rear end. Because each of these surface cleaning heads are three-dimensional objects, each has a front and rear end. Ex1002 ¶74. For example, Butler teaches a surface cleaning head, "**inlet nozzle 1701**," which has a front end, "**inlet 1714a**," and a rear end, "**outlet 1713a**":

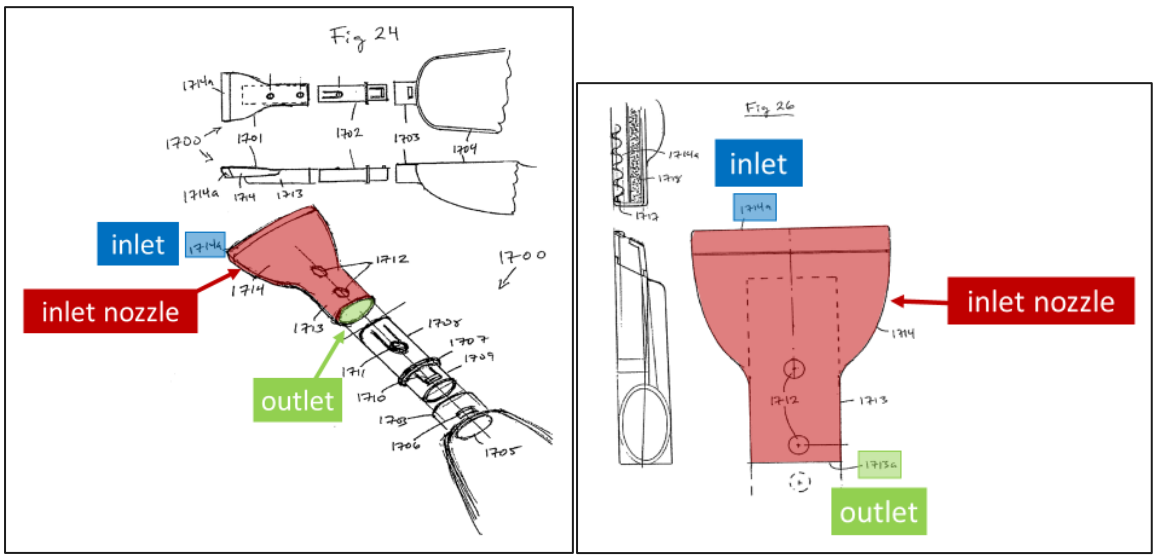


Ex1005, 42:6-9, Figs. 24, 26; Ex1002 ¶¶74-75. Further, Butler teaches another surface cleaning head, "**cleaning head 1208**," with a front end, "**nozzle opening 1226**," and a rear end, "**nozzle opening 1224**":

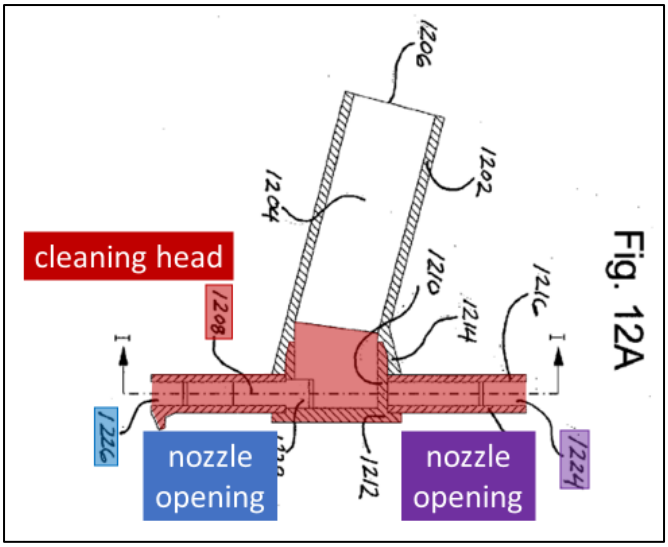


Ex1005, 31:24-27, Fig. 12A; Ex1002 ¶¶74-75.

Butler teaches another "**cleaning head 1302**" that has "a generally rectangular body" with bristles extending downwards from the "outer perimeter of the **head 1302**." Ex1005, 32:10-12. Butler's "**cleaning head 1302**" has a front end and a rear end, with the front end extending out of the page and the rear end extending into the page, as shown:[5]

[5] Annotated text in black-filled boxes is the '030 patent's claim language, and text in colored boxes is disclosure from the cited reference.

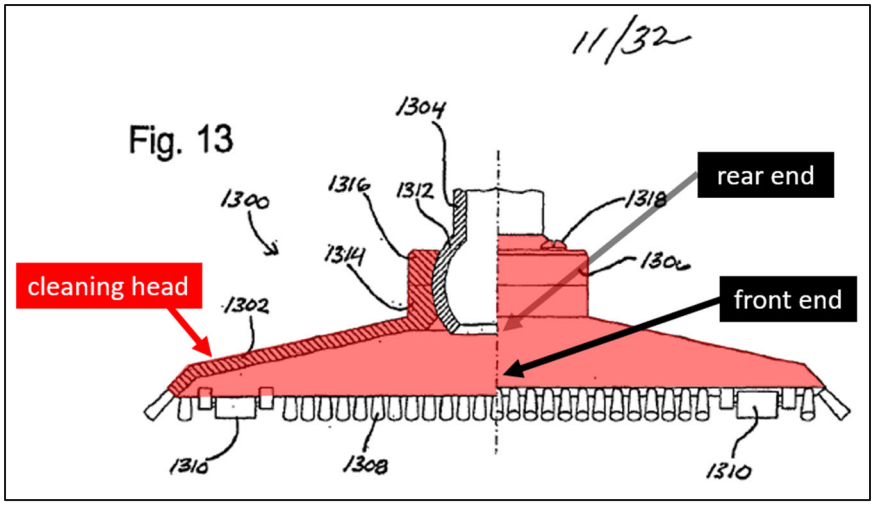


*Id.*, Fig. 13, 32:8-12; Ex1002 ¶76.

Butler teaches another cleaning head, "**inlet nozzle 204**." Ex1005, 15:19-22. Butler's "**inlet nozzle 204**" has a front end and a rear end as shown:

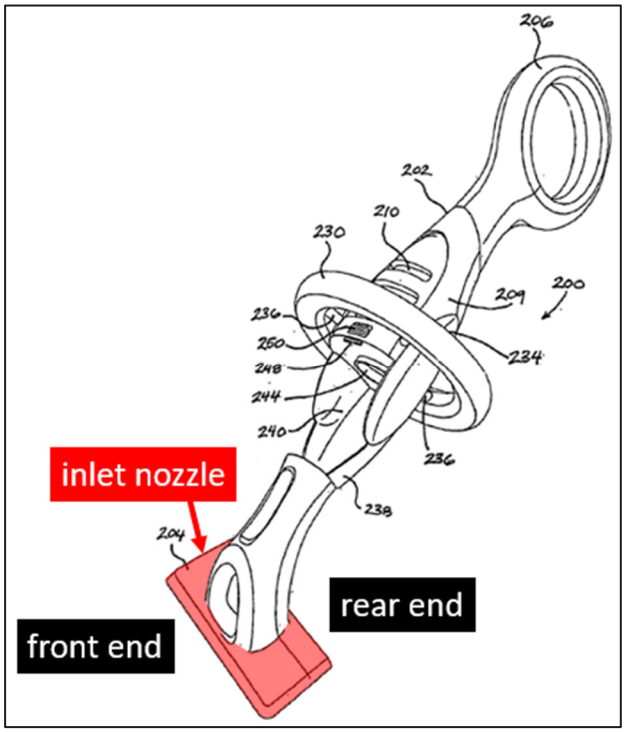


Ex1005, Fig. 1, 15:19-22, 16:4-13; Ex1002 ¶77.

Each of Butler's surface cleaning heads have a dirt air inlet and a cleaning head air outlet. Ex1002 ¶¶78-79. A POSA would understand that each surface cleaning head has a dirt air inlet where dirty air enters the surface cleaning head, and a cleaning head air outlet to deliver that dirty air to the vacuum, which separates the dirt from the air. Ex1002 ¶¶78-79. For example, Butler teaches that air flows into "**inlet nozzle 1701**" at "**inlet 1714a**" and exits "outlet duct 1713" at "**outlet 1713a** for the **inlet nozzle 1701**":

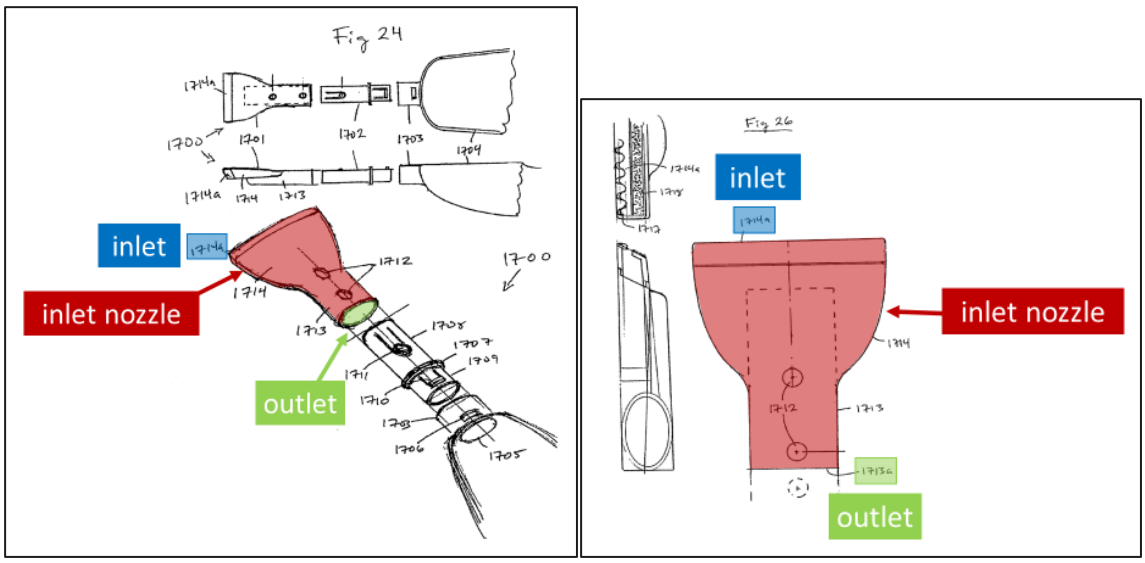


Ex1005, 42:6-9, Figs. 24, 26; Ex1002 ¶78. Butler's "**inlet 1714a**" is a dirt air inlet and that Butler's "**outlet 1713a**" is a cleaning head air outlet. Ex1002 ¶79.

Similarly, for the surface cleaning head shown in Butler Figure 12A, air flows into "**nozzle opening 1226**," through the "**cleaning head 1208**," to an "**end** to a cleaning head 1208" that is "attach[ed]" to "**grip 1202**":

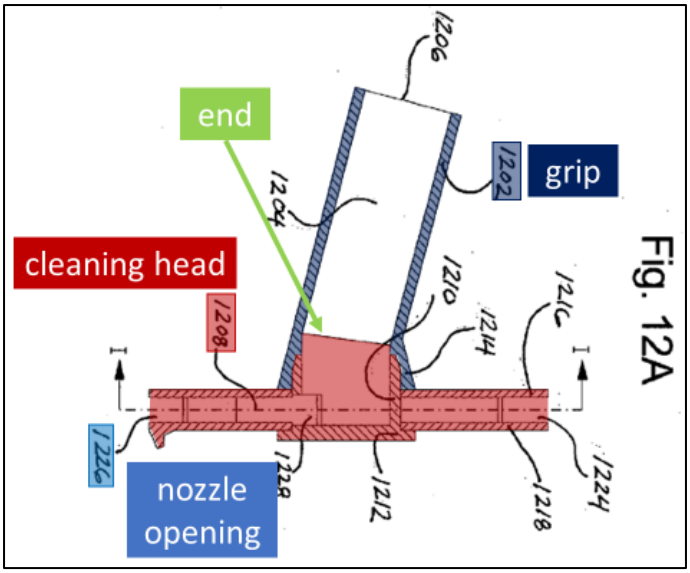


Ex1005, 31:6-27, Fig. 12A; Ex1002 ¶80. Butler's "**nozzle opening 1226**" is also a dirt air inlet and Butler's "cleaning head 1208" "**end**" is also a cleaning head air outlet. Ex1002 ¶81.

Further, Butler's "**cleaning head 1302**" has a dirt air inlet (where the bristles are located), and a cleaning head air outlet (where the "**cleaning head 1302**" attaches "to a **vacuum tube 1304**"):

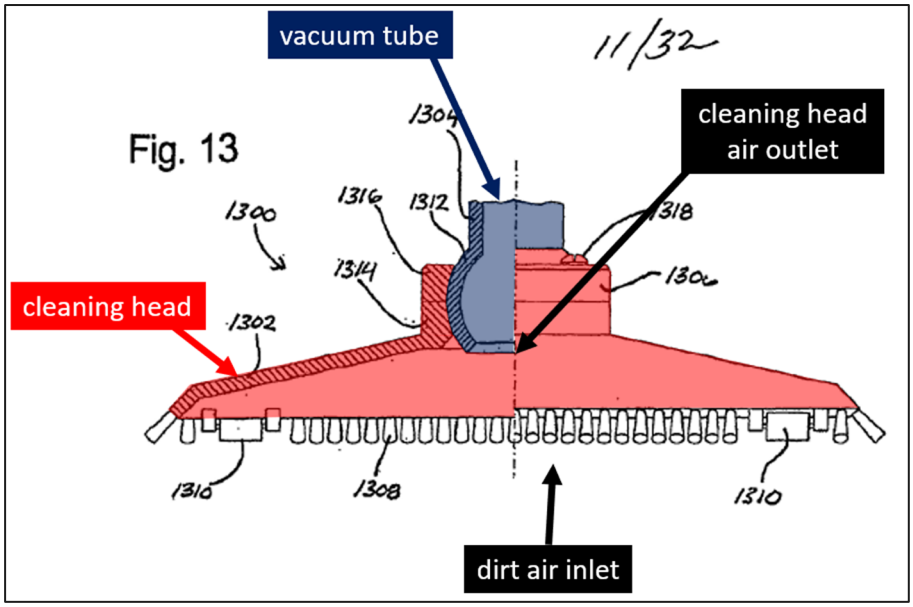


Ex1005, Fig. 13, 32:8-12; Ex1002 ¶82.

For the surface cleaning head shown in Figure 2A, air flows into the "**inlet nozzle 204**" and exits into "**inlet air passage 242**" that attaches to "**housing 202**." Ex1002 ¶83. The opening of the "**inlet nozzle 204**" facing the ground is a dirt air inlet and the area where air flows out of "**inlet nozzle 204**" and into the "**inlet air passage 242**" is a cleaning head air outlet:

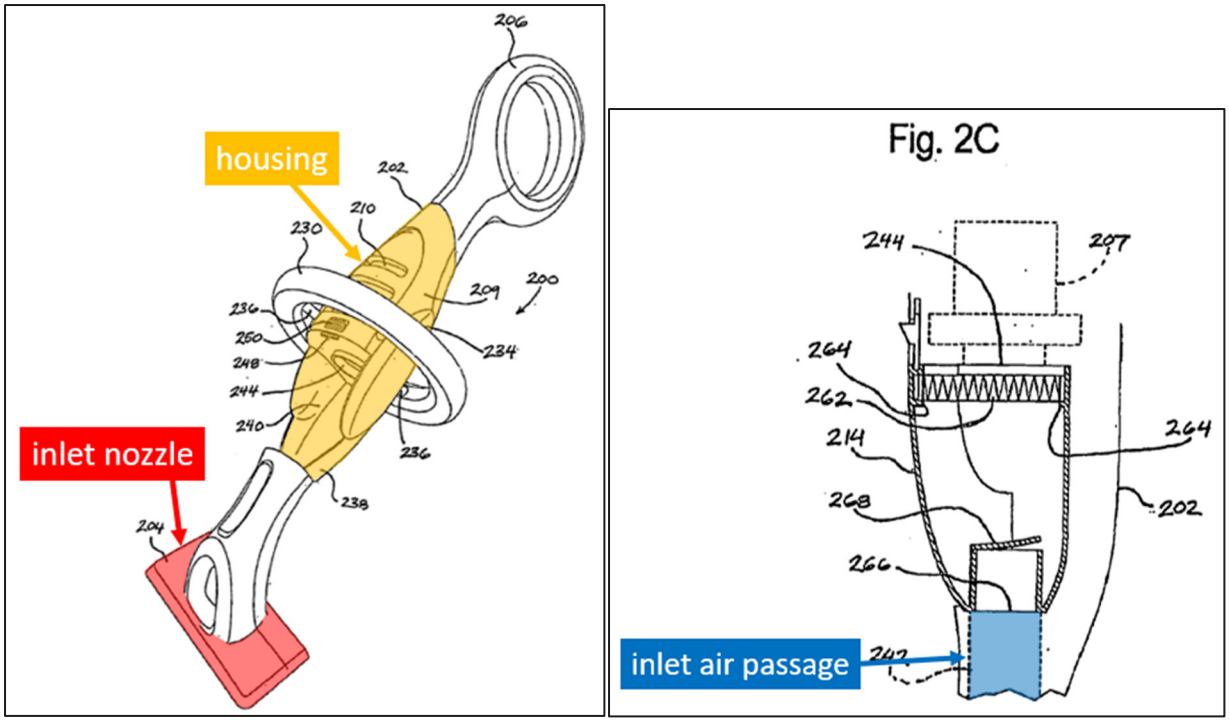


Ex1005, Figs. 2A, 2C, 15:19-22, 16:4-13; Ex1002 ¶83.

**c. [1b.1]/[9b.1]**

Butler teaches these limitations. Ex1002 ¶¶84-90. Butler teaches rigid tubes that connect Butler's surface cleaning heads and Butler's vacuum cleaner air inlet, which a POSA would understand are rigid airflow conduits. Ex1002 ¶84. For example, Butler teaches that "**nozzle connector 1702**" connects Butler's "**inlet nozzle 1701**" and "**inlet tube 1703**":

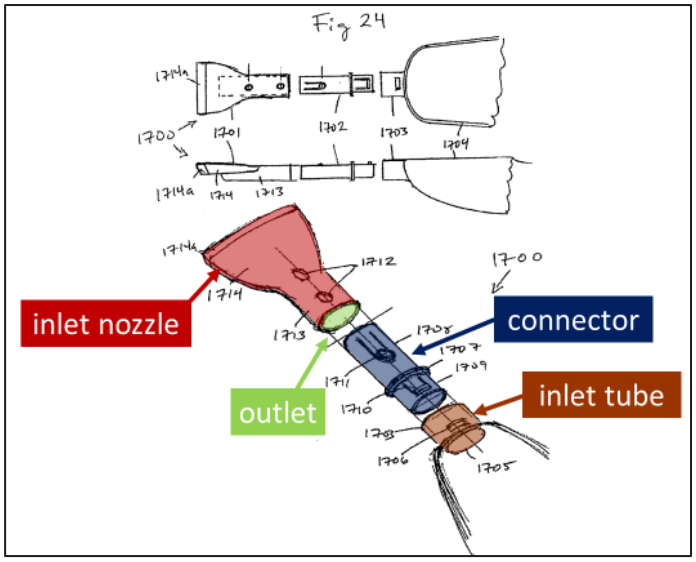


Ex1005, 41:7-14, Fig. 24; Ex1002 ¶85. A POSA would understand that Butler's "**connector**" is a rigid air flow conduit at least because air passes through it (specifically, from "**outlet 1713a** for the **inlet nozzle 1701**" to the "**inlet tube 1703**"), and that Butler's "**connector**" is made of rigid material, such as a rigid plastic. Ex1002 ¶86. For example, Butler teaches that "[t]he rear grip 106, and any other part of the vacuum cleaner 100, may be made from any suitable material, such as ABS plastic … other plastics, metal, and so on" and that "[p]lastics are generally preferred as a relatively inexpensive, moldable and structurally ***rigid*** material." Ex1005, 11:3-6 (emphasis added).

Butler's "**connector**" has a rigid wand inlet end having an air inlet that communicates with the cleaning head air outlet: the upstream end of Butler's "**connector**" is a rigid wand inlet end with an air inlet at least because that is where

air enters the "**connector**" from "**outlet 1713a** for the **inlet nozzle 1701**" (the cleaning head air outlet):

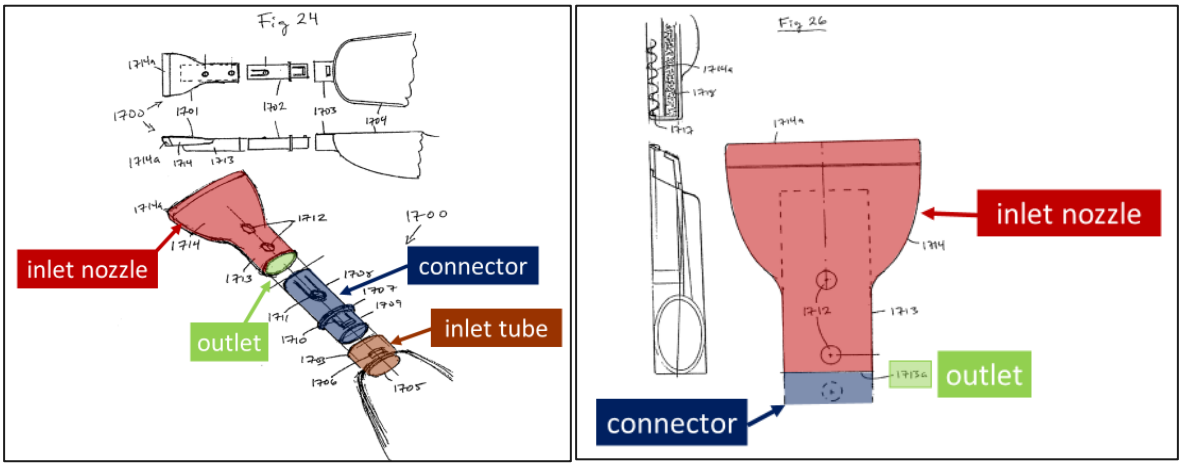


Ex1005, 41:8-29, Figs. 24, 26; Ex1002 ¶¶86-87.

Butler's "**connector**" has a rigid wand outlet end at the downstream end of the "**connector**," where it connects to the "**inlet tube**," as shown above, at least because this is where air exits the "**connector**." Ex1005, Fig. 24; Ex1002 ¶88.

Butler also teaches "**vacuum tube 1304**," which is attached to "**cleaning head 1302**." Ex1005, 32:8-10. Butler's "**vacuum tube 1304**" is also a rigid air flow conduit having a rigid wand inlet that communicates with the cleaning head air outlet and has a rigid wand outlet end, for the same reasons as for Butler's "**connector**":

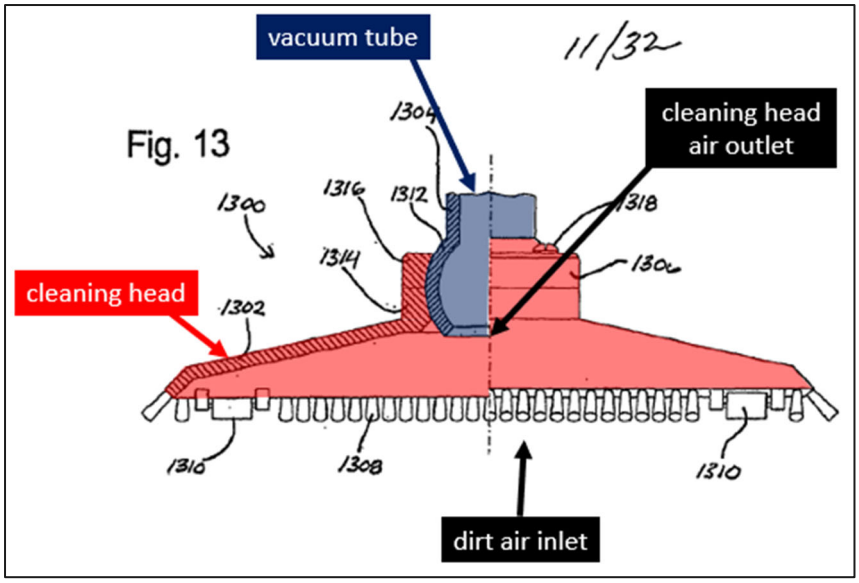


Ex1005, 32:8-14, Fig. 13; Ex1002 ¶89.

Butler's **connector/vacuum tube** has a longitudinally extending conduit axis:

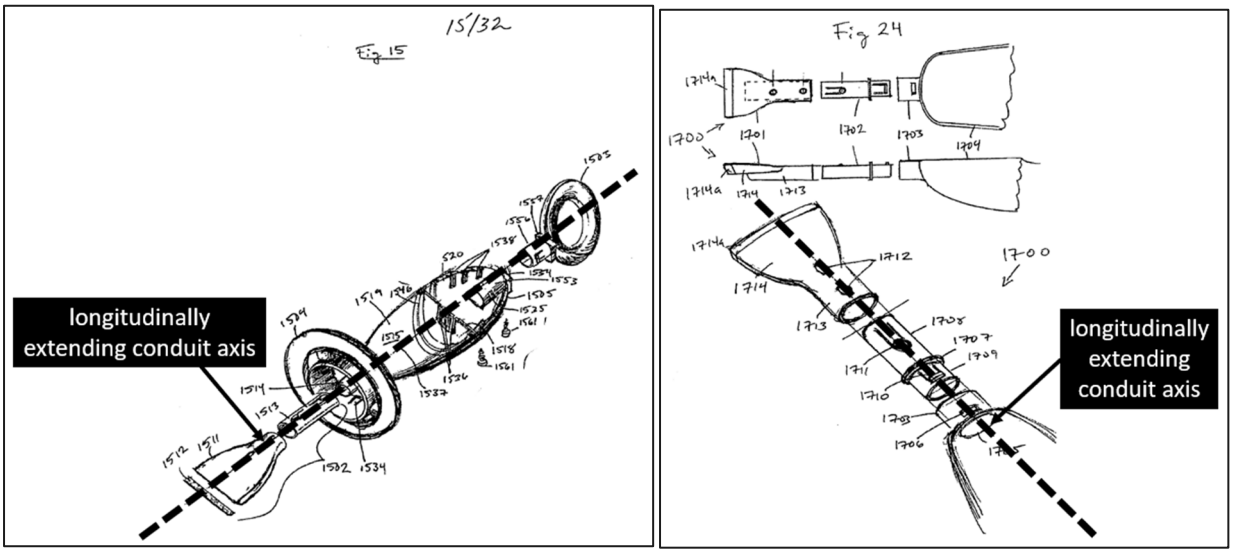

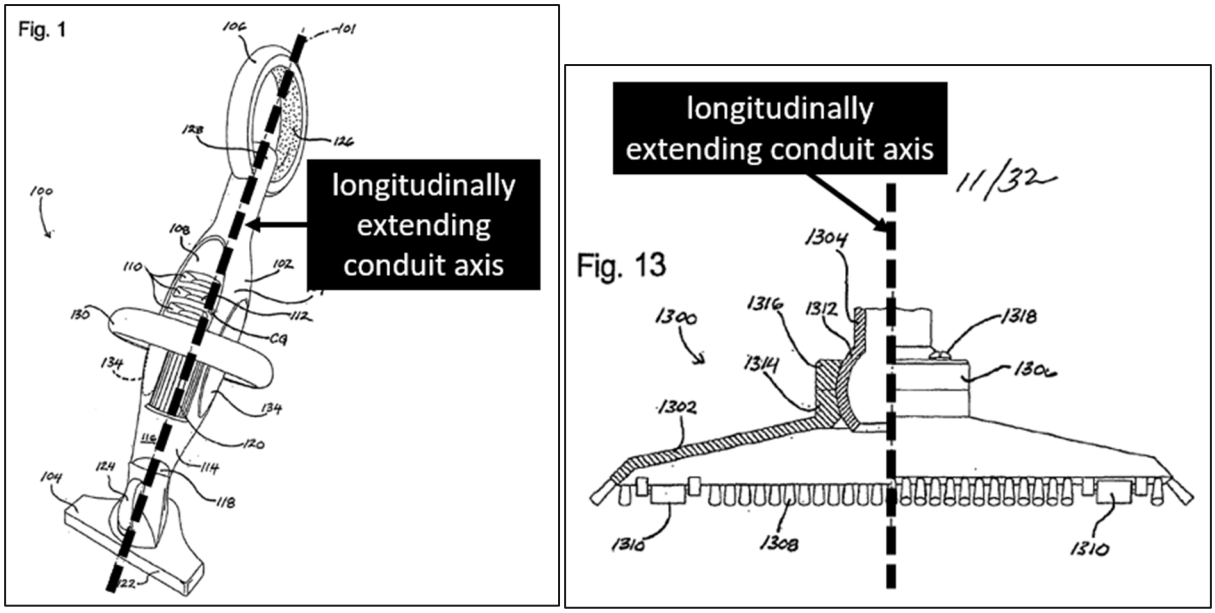


Ex1005, Figs. 1, 13, 15, 24; Ex1002 ¶90.

**d. [1b.2]/[9b.2]**

Butler teaches these limitations. Ex1002 ¶¶91-101.

Butler teaches that the rigid air flow conduit is moveably mountable to the surface cleaning head. Ex1002 ¶91. Butler teaches that its **connector/vacuum tube** (the rigid air flow conduit) is moveably mounted to the surface cleaning head using a pivotable joint. Ex1002 ¶92. For example, Butler's "**cleaning head 1302** … is pivotally attached to a **vacuum tube 1304**," which includes "a **generally spherical end portion 1312**," by a "**ball-and-socket joint 1306**":

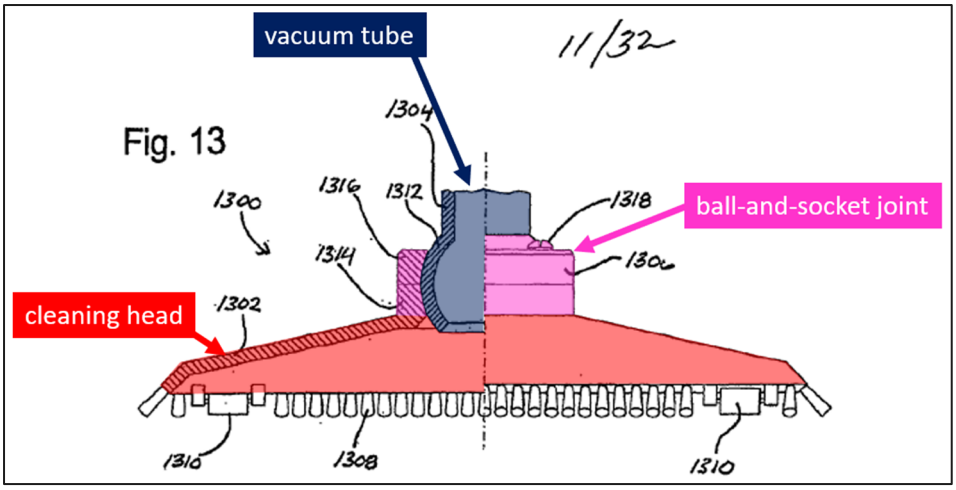


Ex1005, Fig. 13, 32:8-10, 32:15-16; Ex1002 ¶92. "Using this construction, the **vacuum tube 1304** can be rotated relative to the cleaning head 1302 in any direction … ." Ex1005, 32:21-22. This "ball-and-socket joint" is a moveable mount between Butler's "vacuum tube" (the rigid air flow conduit) and the "cleaning head" (the surface cleaning head) because it allows the vacuum tube and cleaning head to pivot relative to each other while maintaining a physical and an air-flow connection. Ex1002 ¶93.

Butler teaches other moveable mounts between its surface cleaning head and rigid air flow conduit. For example, Butler teaches a "rotatable inlet nozzle," including "**inlet nozzle 104**" (the surface cleaning head) which is "rotatably mounted to the housing" (via the rigid airflow conduit) to allow for movement between them that is "typically found in conventional upright vacuums":

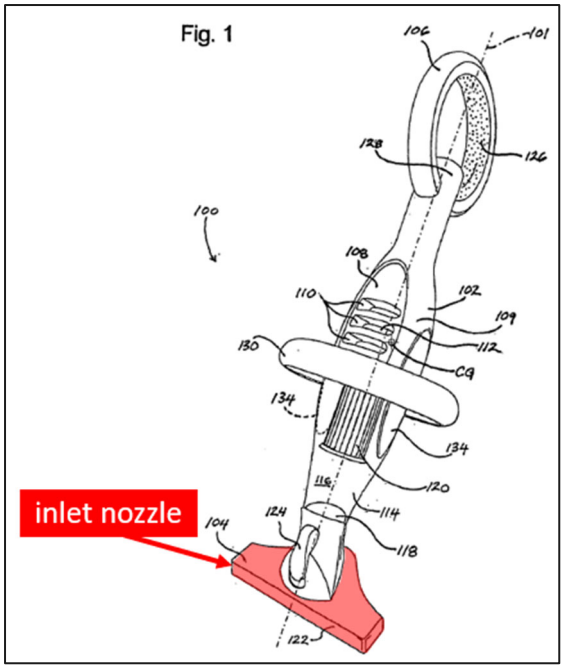


Ex1005, 10:3-9, Fig. 1; Ex1002 ¶94. Butler further teaches that "various combinations of pivots" may be used for "more complex rotation capabilities," which are known in the art. Ex1005, 10:3-15; Ex1002 ¶¶95-96. For example, Butler teaches a "flexible nozzle-attaching tab" to moveably mount the rigid air flow conduit to the surface cleaning head. Ex1005, 41:26-42:1. Butler's "inlet nozzle 1701" (the surface cleaning head)—and "nozzle connector 1702" (the rigid air flow conduit) may be connected using a "flexible nozzle-attaching tab 1711" that secures the "nozzle 1701 to the connector 1702" and Butler teaches that an "operator can depress this tab 1711 to … move the nozzle 1701 between multiple axial or radial positions on the connector 1702." *Id.*, 41:8-11, 41:26-42:1.

Butler teaches that the rigid air flow conduit is moveably mountable to the surface cleaning head between an upright position and an in-use floor cleaning

position in which the rigid air flow conduit extends at an angle to the vertical. Ex1002 ¶¶97-100. Each of Butler's moveable mounts, including the "ball-and-socket joint 1306," the "tab," and the moveable mount used in Butler's "rotatable inlet nozzle," allows Butler's rigid air flow conduit to move between an upright position and an in-use floor cleaning position in which the rigid air flow conduit extends at an angle to the vertical. Ex1002 ¶97. For example, Butler teaches that the connector/vacuum tube can be "rotated relative to the cleaning head 1302 in any direction," which a POSA would understand includes an upright position and an in-use position in which the rigid air flow conduit extends at an angle to the vertical. Ex1005, 10:3-9, 32:15-24, 41:8-11, 41:26-42:1; Ex1002 ¶98. Butler also teaches a "rotatable inlet nozzle" that is "rotatably mounted to the housing," and further teaches that the surface cleaning head can take "multiple axial or radial positions on the connector 1702," which a POSA would understand includes upright positions, like those "typically found in conventional upright vacuums," and in-use positions in which the rigid air flow conduit extends at an angle to the vertical. Ex1005, 10:3-9, 32:15-24, 41:8-11, 41:26-42:1; Ex1002 ¶99. Butler further teaches that a user can "point the inlet nozzle 104 horizontally to clean surfaces such as stair treads, vertically to clean surfaces such as stair risers, or at any angle in between." Ex1005, 12:3-10. Because Butler's surface cleaning head can be attached to Butler's rigid air flow conduit using a ball-and-socket joint, can be "rotated," and can be used in

"multiple axial or radial positions" and at "any angle," including horizontally and vertically, a POSA would understand that Butler teaches a rigid air flow conduit that is moveably mountable to the surface cleaning head between an upright position and an in-use floor cleaning position in which the rigid air flow conduit extends at an angle to the vertical. Ex1002 ¶100.

Further, Butler teaches that its moveable mounting allows the cleaner to pivot between an upright position, as depicted, for example, in Butler Figure 16, and the claimed in-use floor cleaning position in which the rigid air flow conduit extends at an angle to the vertical, as Butler depicts in Figure 1:

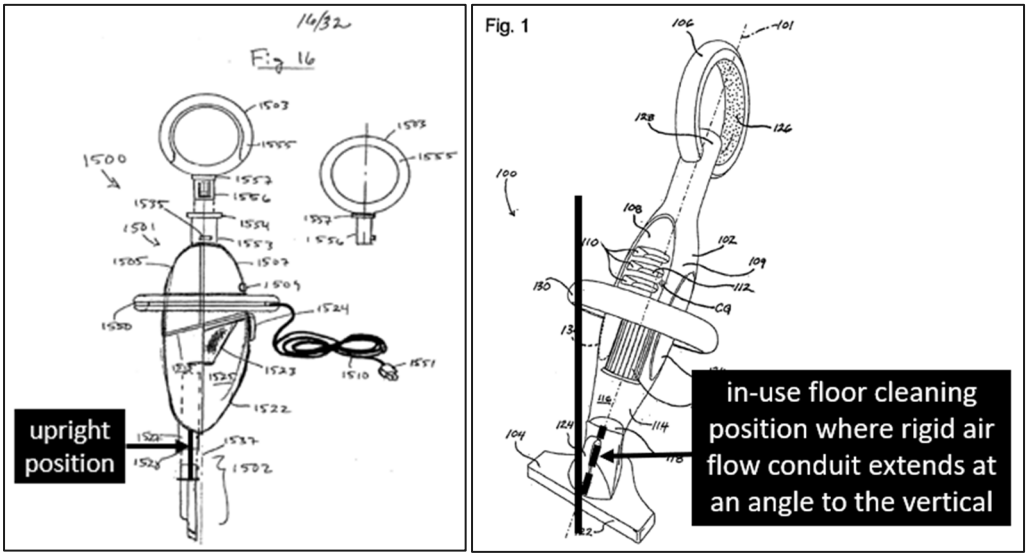


Ex1005, Figs. 1, 16; Ex1002 ¶101.

**e. [1b.3]/[9b.3]**

Butler teaches these limitations. Ex1002 ¶¶102-107. A POSA would understand that Butler's rigid wand outlet end has an air outlet where it connects to the hand vacuum:

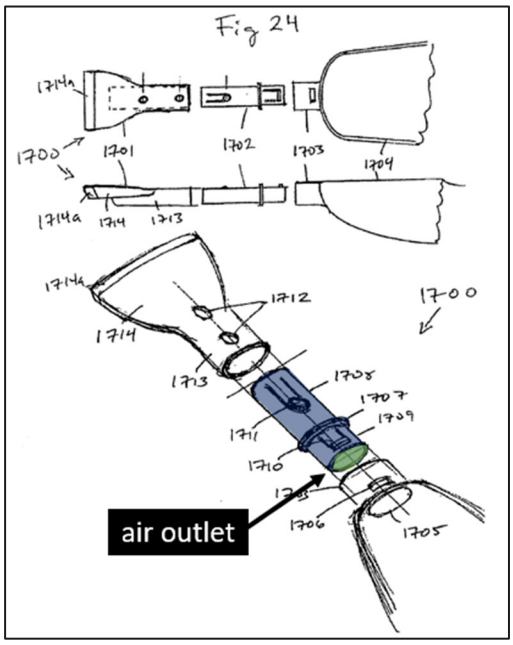


Ex1005, Fig. 24, 41:19-29; Ex1002 ¶102. A POSA would further understand that Butler's "vacuum tube" likewise includes a rigid wand outlet end having an air outlet, for the same reasons. Ex1002 ¶103.

Further, a POSA would understand that Butler teaches that the rigid wand outlet end has an outlet end electrical connector. Ex1002 ¶¶104-107. ***First***, Butler teaches a motorized powerhead with electrical leads: Butler teaches a "powerhead having a rotating agitator" and teaches that "[o]f course, if a powered attachment is provided, suitable power leads can be provided to connect the powered attachment

to the electric circuit." Ex1005, 22:5-13. ***Second***, Butler teaches electrical leads at the hand vacuum cleaner inlet: "leads may pass around or through the dirt receptacle, or may be integrated into the dirt receptacle body." *Id.* A POSA would understand that for the power leads to provide power to Butler's powered attachments, the rigid wand outlet would have an outlet end electrical connector "to connect the powered attachment to the electrical circuit." *Id.*, 22:5-11; Ex1002 ¶105. Butler's "entry tube 524" includes an electrical connector adjacent to the hand vacuum cleaner air inlet to connect to "power leads" and provide power to Butler's powered attachment. Ex1005, 22:6-11; Ex1002 ¶106. ***Third***, as described in Limitation [1c], Butler's connector/vacuum tube connects this powered attachment to the hand vacuum cleaner. *See* Ground 1, Limitation [1c]. A POSA would therefore understand that to connect a powered attachment to the hand vacuum cleaner, Butler's connector/vacuum tube would have electrical connectors at both its inlet end (to connect to the electrical connectors of the powered attachment) and at its outlet end (to connect to the hand vacuum cleaner's electrical connector, located adjacent its air inlet). Ex1002 ¶107.

**f. [1c]/[9c]**

Butler teaches these limitations. Ex1002 ¶¶108-127. Butler teaches "a vacuum cleaner" that is designed to be used by hand and is a hand vacuum cleaner. Ex1005, Title, Fig. 1. Butler's vacuum cleaner includes a "**rear grip**" and "one or

more **foregrips**," and Butler teaches a range of "compact" sizes, including a distance between the foregrip and the rear grip of six inches, and an overall vacuum length of eighteen inches:

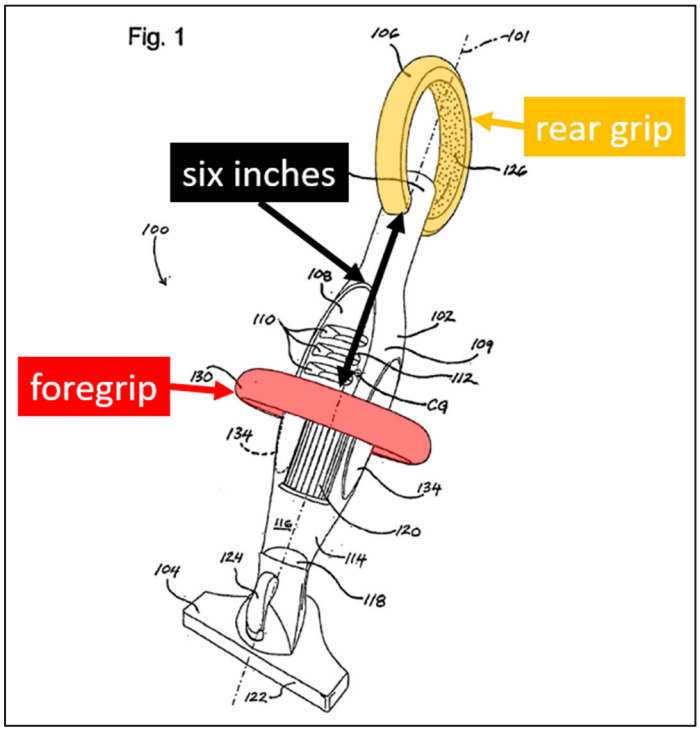


Ex1005, 15:5-6, 26:1-10, Fig. 1; Ex1002 ¶109. Butler teaches that its "compact" and "maneuver[able]" design is "adapted for cleaning … stairwells and other confined spaces," and further teaches telescoping handgrip members and extension tubes to reach the floor. Ex1005, Abstract, 1:2-3, 26:1-5, 27:12-29. Moreover, Butler's vacuum cleaner is designed to have an optimal "center of gravity" and to "remov[e] excess weight," Ex1005, 13:1-19, 15:12-18, which are considerations that a POSA would understand apply to hand vacuum cleaners. Ex1002 ¶¶109-110. Butler therefore teaches a hand vacuum cleaner. Ex1002 ¶111.

Butler teaches that its hand vacuum cleaner is removably mountable to the rigid wand outlet end via the hand vacuum cleaner's "**inlet tube**," as shown below:

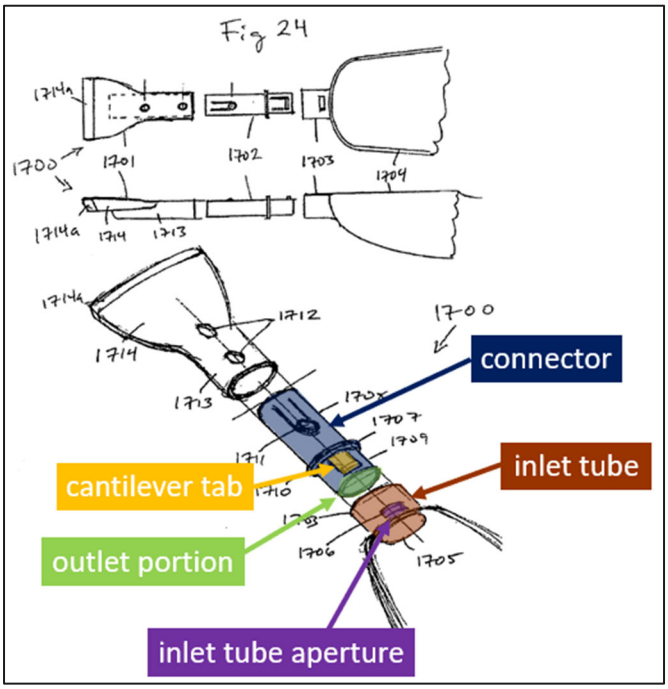


Ex1005, Fig. 24, 41:19-29; Ex1002 ¶112. Specifically, Butler teaches that "**connector 1702**"—Butler's rigid air flow conduit—has "an inlet portion 1708 and an **outlet portion 1709**" (i.e., the rigid wand outlet end, *see* Ground 1, Limitation [1b.1]), which is "telescopically received within or around the **inlet tube 1703**" of Butler's hand vacuum cleaner. Ex1005, 41:19-25. Butler further teaches that this mounting its removeable: it includes a "**cantilever tab 1710**" that fits into the "**inlet tube aperture 1706**" of the hand vacuum cleaner and a user can depress the "**cantilever tab 1710**" clicking it out of the "**inlet tube aperture 1706**" to remove the "**connector 1702**" from the hand vacuum cleaner. Ex1005, 41:19-26; Ex1002 ¶¶113-114. A POSA would understand that Butler's "**vacuum tube**" has the same

functionality and therefore satisfies these limitations for the same reasons. Ex1005, Fig. 13; Ex1002 ¶114.

Butler's hand vacuum cleaner has a front end and a rear end:

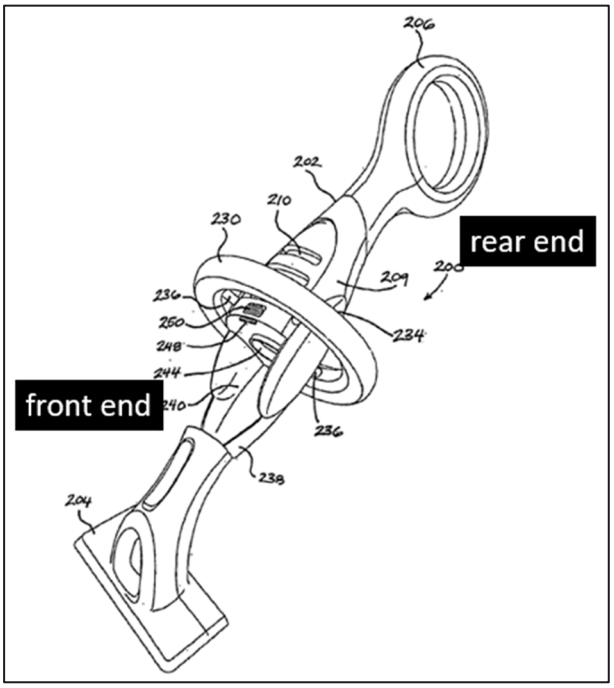


Ex1005, Fig. 2A.; Ex1002 ¶115. Butler's hand vacuum cleaner includes a "housing 102 having an inlet nozzle 104 at a first end of the housing 102," which is at the front end, and "a rear grip 106 at a second end of the housing 102," which is at the rear end of the hand vacuum cleaner. Ex1005, 7:15-17; Ex1002 ¶116.

**g. [1c.i]/[9c.i]**

Butler teaches these limitations. Ex1002 ¶¶117-127. Butler's hand vacuum cleaner has a main body. Ex1002 ¶117. For example, Butler teaches that its "vacuum cleaner ha[s] a generally elongated housing," as shown in Figure 5:

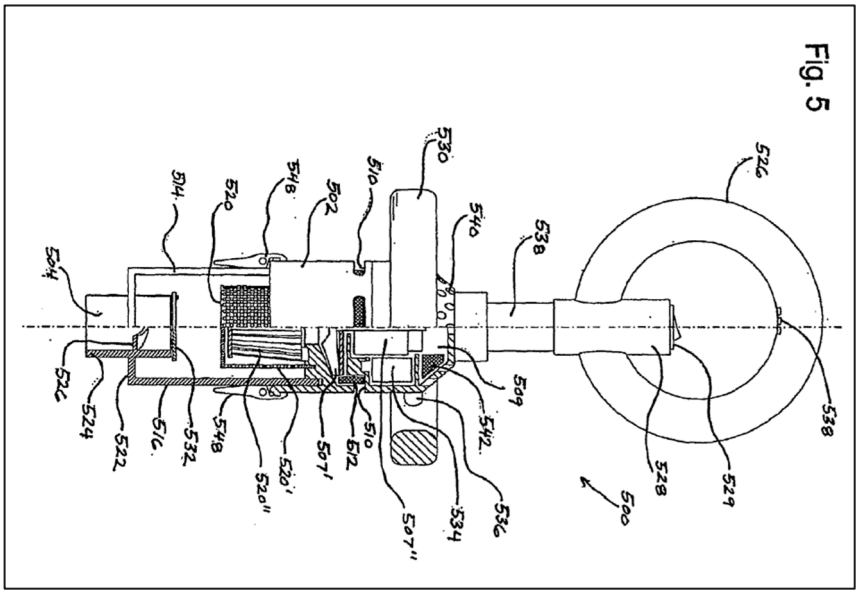


Ex1005, Abstract, Fig. 5; *see also*, *e.g.*, *id.*, Fig. 1. Butler's vacuum cleaner main body includes Butler's "generally elongated housing." Ex1002 ¶¶117-119.

Butler's vacuum cleaner main body comprises a handle. Ex1002 ¶120. For example, Butler teaches "one or more foregrips located on the housing," which a POSA would understand are each a handle because a user would hold the foregrip(s) to "handl[e] the device" when cleaning surfaces. Ex1005, Abstract, 3:28-4:1, 11:21-22, 12:3-13; Ex1002 ¶120. Butler also teaches that its main body comprises other handles, including "**straight grips 330**," "**pistol-grip style foregrips 430**," and a "**rotatable foregrip 630**," and "**rear grip[s]**":

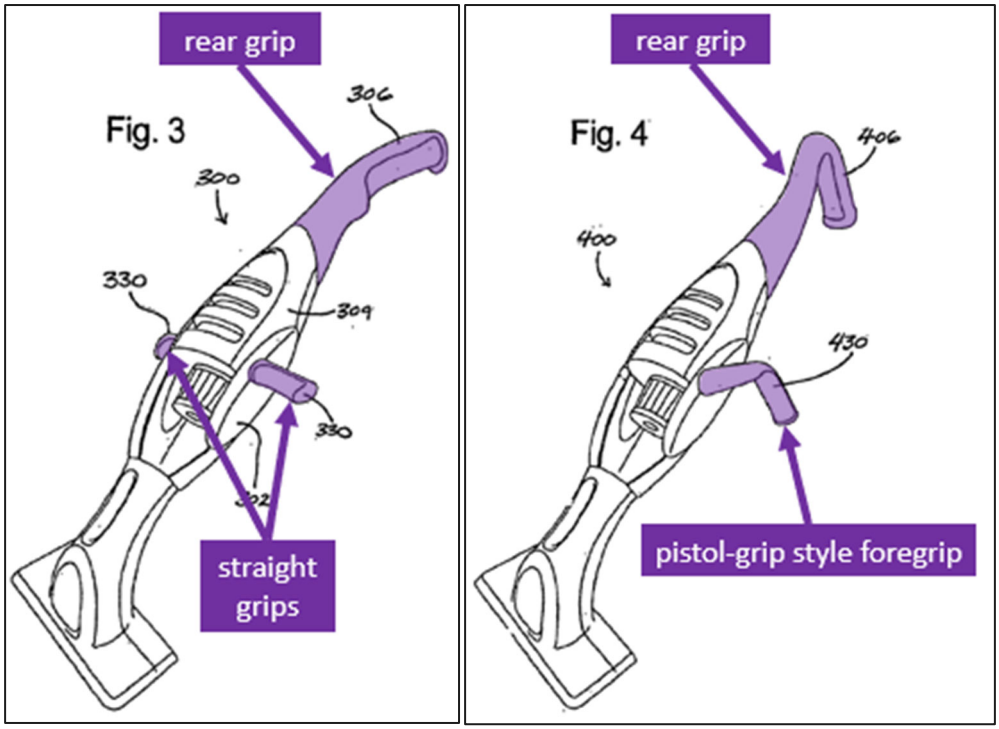


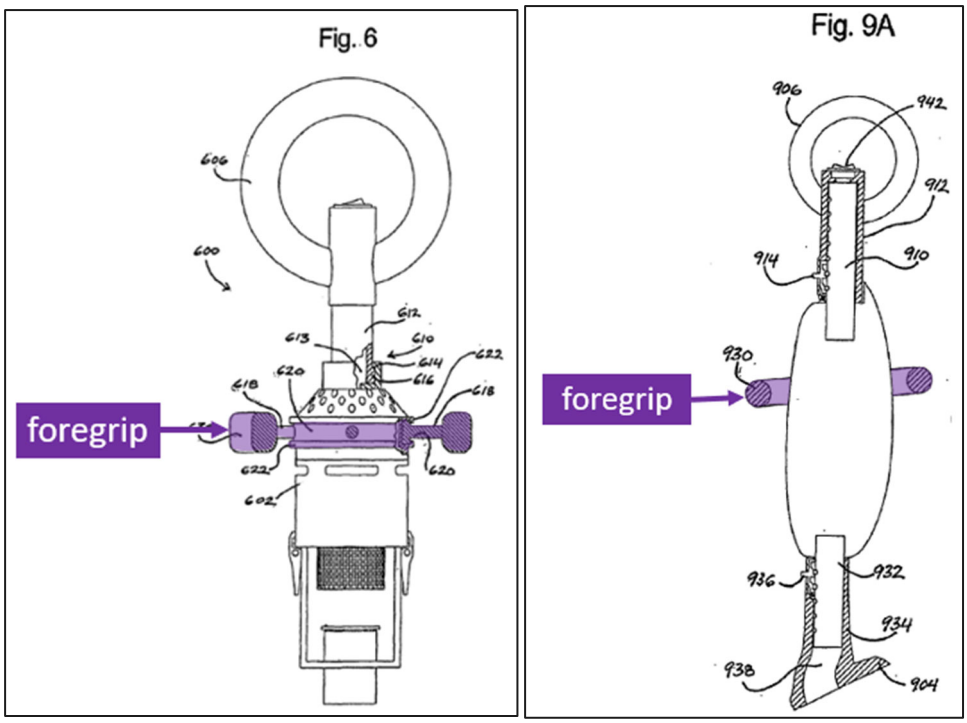


Ex1005, Figs. 3-4, 6, 9A; Ex1002 ¶121.

Each of Butler's handles includes a hand grip portion. Butler teaches that its handles may "include gripping surfaces or surface treatments to enhance the user's grip and feel." Ex1005, 12:3-7; 11:21-24, Figs. 1, 3-4, 10, 16; *see also id.*, 11:3-11, 38:25-28, Fig. 10. Butler's handle "gripping surfaces" and "surface treatments" are hand grip portions. Ex1002 ¶122. Further, Butler explains that its "gripping surface[s]" may be placed on any or all portions of any of Butler's disclosed handles: "**rear grip** … may be made from any suitable material" and "include[s] one or more **gripping surfaces** … comprising a material that is more particularly adapted to provide a favorable tactile feel and/or enhanced gripping friction," such as "dimples, checkering, ridges or bumps":

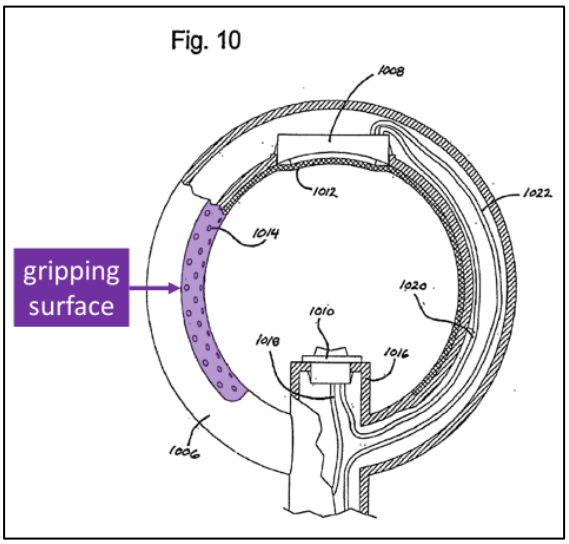


Ex1005, 11:3-11, Fig. 10; Ex1002 ¶122. "As with the rear grip, the foregrip 130 may be made from any suitable material, and may also include gripping surfaces or

surface treatments to enhance the user's grip and feel." Ex1005, 11:22-24; *see also id.*, 38:25-28, Fig. 16. Ex1002 ¶¶123-125.

Butler's main body further comprises a suction motor and fan assembly. Ex1002 ¶126. Butler teaches that its vacuum cleaner main body includes "**fan/motor 507**," which is a suction motor and fan assembly, and which a POSA would understand has a suction motor axis of rotation as shown:

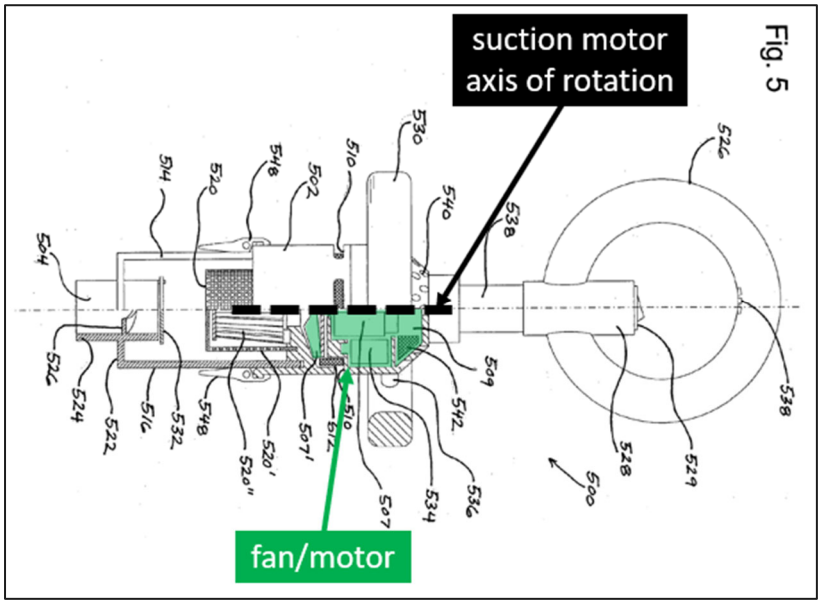


Ex1005, Fig. 5, 20:12-14; Ex1002 ¶126. A POSA would understand that the suction motor axis of rotation is the axis through the center of Butler's "**fan/motor 507**," around which Butler's "**fan**" rotates, including because Butler teaches that the "fan/motor 1539" is "centered generally about the vacuum centerline 1537." Ex1005, 35:12-14, 37:3; Ex1002 ¶127.

**h. [1c.ii]/[9c.ii]**

Butler teaches these limitations. Ex1002 ¶¶128-134. Butler teaches an air treatment member provided at the front end of the hand vacuum cleaner having a central longitudinal axis. Ex1002 ¶¶128-129. Butler teaches a "**dirt receptacle** compris[ing] a **cyclone separator**" provided at the front end of the hand vacuum cleaner body:

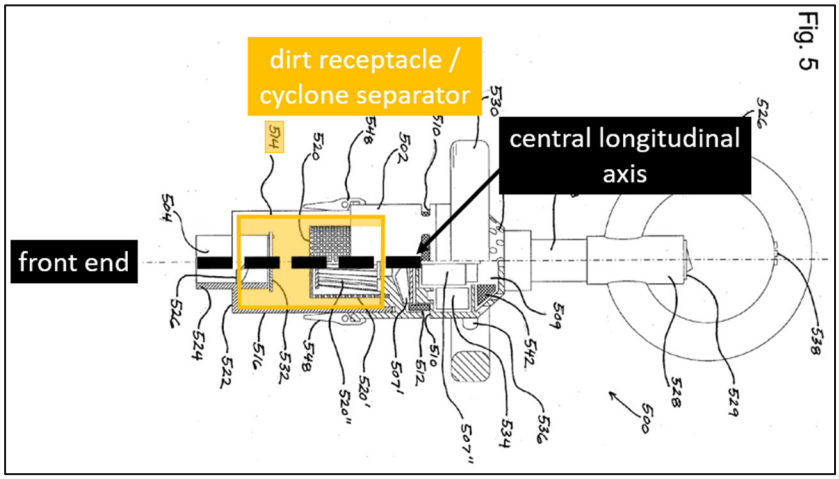


Ex1005, Claim 11, Fig. 5; Ex1002 ¶130. A POSA would understand that Butler's "**dirt receptacle** compris[ing] a **cyclone separator**" is an air treatment member at least because it treats the air by separating dirt. Ex1002 ¶131; *see also* Ex1005, 22:23-25. A POSA would further understand it has a central longitudinal axis as depicted above, which, like Butler's fan/motor axis is "centered generally about the vacuum centerline 1537." Ex1005, 35:12-14, 37:3; Ex1002 ¶¶132.

Regarding Limitation [1c.ii], Butler teaches an air treatment chamber having a front wall. Ex1002 ¶133. A POSA would understand that Butler's "**dirt**

**receptacle** compris[ing] a **cyclone separator**" has an air treatment chamber, at least because it has a "receptacle" in which air is treated using a "cyclonic separator." Ex1005, Claim 11; Ex1002 ¶133. Further, Butler's "**dirt receptacle** compris[ing] a **cyclone separator**" has a "**bottom wall 522**," which a POSA would understand is an air treatment chamber front wall at least because it is the air treatment chamber wall that is at the upstream end where air enters the air treatment member:

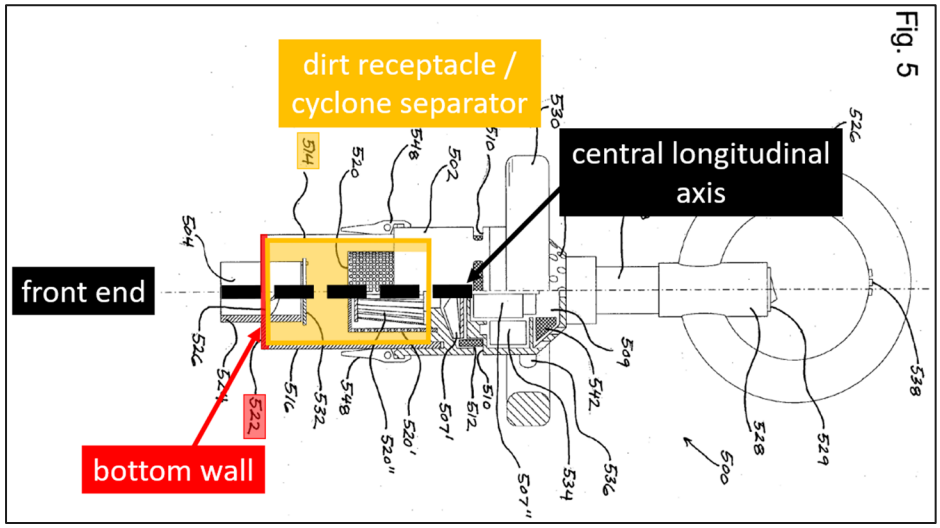


Ex1005, 21:21-23, Fig. 5; Ex1002 ¶134.

**i. [1c.iii]/[9c.iii]**

Butler teaches these limitations. Ex1002 ¶¶135-142. Butler teaches a hand vacuum cleaner air inlet. Ex1002 ¶¶135-136. In Butler, air enters the cleaner via "**nozzle inlet 504**," which "comprises an entry tube 524 that passes through the dirt receptacle **bottom wall 522**":

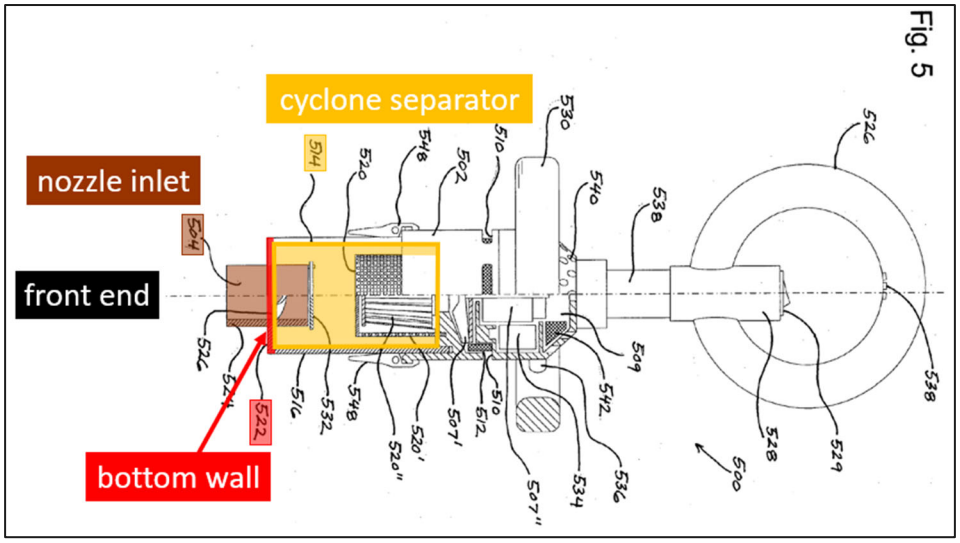


Ex1005, 22:5-6, Fig. 5; Ex1002 ¶137. Butler's "**nozzle inlet 504**" is a hand vacuum cleaner air inlet. Ex1002 ¶138.

Regarding Limitation [1c.iii], Butler teaches that its hand vacuum cleaner air inlet is centrally positioned with respect to the air treatment chamber front wall. Ex1002 ¶139. As shown above, Butler's "**nozzle inlet 504**" is centrally positioned (radially and top-to-bottom) with respect to Butler's "**bottom wall 522**" (the air treatment chamber front wall). Ex1002 ¶139.

Regarding Limitation [9c.iii], Butler teaches that the hand vacuum cleaner air inlet is provided on the front end of the air treatment member. Ex1002 ¶140. As shown above, Butler's "**nozzle inlet 504**" is provided on the front end of Butler's air treatment member, because it is provided on Butler's air treatment chamber front wall ("**bottom wall 522**") and because it is provided at the upstream end of Butler's air treatment member. Ex1002 ¶140.

For the reasons explained for Limitations [1c]/[9c], Butler teaches that the hand vacuum cleaner air inlet is releasably connectable with the air outlet of the rigid wand. Ex1002 ¶141.

Regarding Limitation [9c.iii], Butler teaches that the hand vacuum cleaner air inlet has an inlet axis that is coaxial with the central longitudinal axis. Ex1002 ¶142. A POSA would understand that Butler's "**nozzle inlet 504**" has an inlet axis, as shown below, and that it is coaxial with Butler's central longitudinal axis, as Butler depicts in Figure 5:

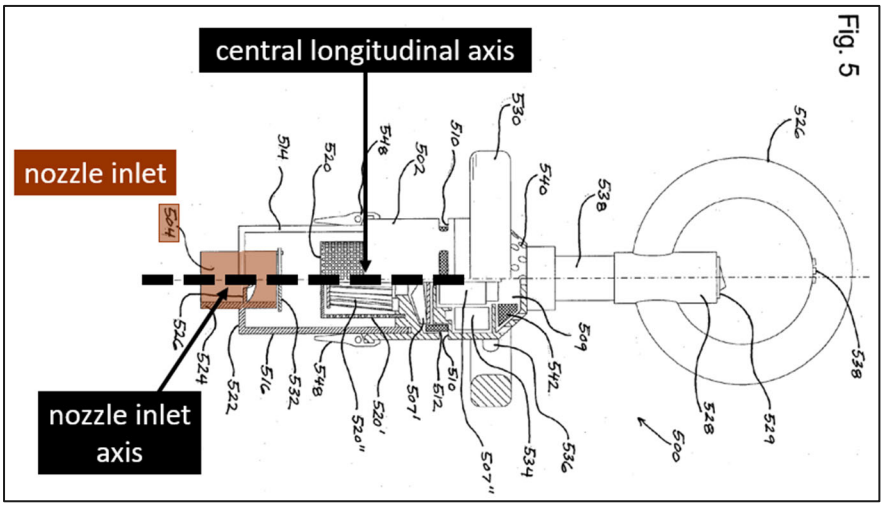


Ex1005, Fig. 5; Ex1002 ¶142.

**j. [1c.iv]/[9c.iv]**

Butler teaches these limitations. Ex1002 ¶¶143-147. For the reasons explained for Limitations [1b.3]/[9b.3], Butler teaches a hand vacuum cleaner electrical connector provided on the front end of the air treatment member to provide power to a powered attachment. *See* Ground 1, Limitations [1b.3]/[9b.3]; Ex1002

¶144. Further, Butler teaches that the hand vacuum cleaner electrical connector is provided on the front end of the air treatment member adjacent the hand vacuum cleaner air inlet. Ex1002 ¶145. For example, Butler teaches that Butler's "**nozzle inlet 504** … comprises an **entry tube 524** that passes through the dirt receptacle bottom wall 522," "any type of cleaning device may be attached to the **entry tube 524**," and "[o]f course, if a powered attachment is provided, suitable power leads can be provided to connect the powered attachment to the electric circuit":

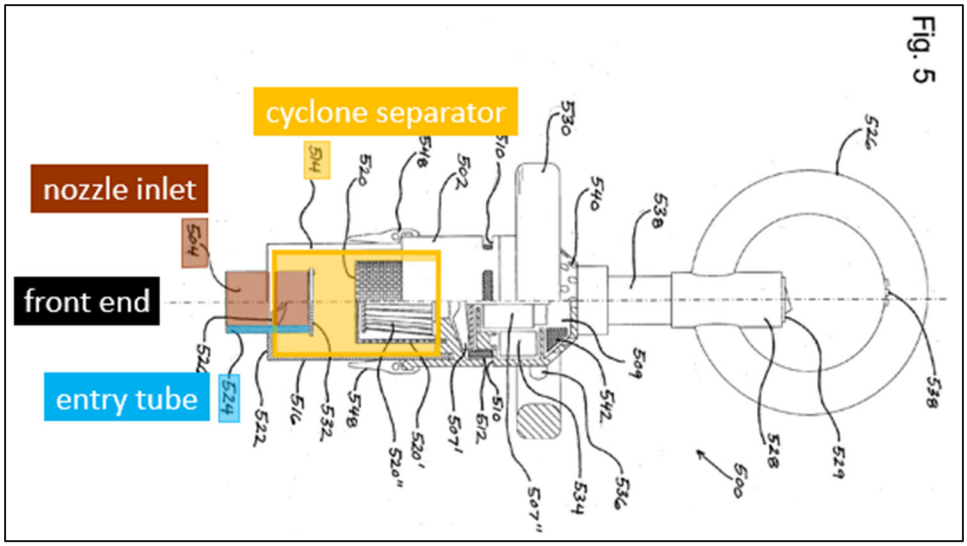


Ex1005, 22:5-11, Fig. 5; Ex1002 ¶145. A POSA therefore would understand that Butler's "**entry tube 524**" includes an electrical connector provided on the front end of the cyclone separator to connect to "power leads" and power Butler's powered attachment. Ex1005, 22:6-11; Ex1002 ¶146. As depicted above, Butler's "**entry tube 524**" is positioned adjacent the hand vacuum cleaner air inlet. Ex1002 ¶¶145-146.

Further, a POSA would understand that the hand vacuum cleaner electrical connector is releasably engageable with the rigid wand outlet end electrical connector to provide electrical circuitry to Butler's powered attachments, because Butler teaches a releasably engageable connector/vacuum tube, as explained for Limitations [1c]/[9c]. *See* Ground 1, Limitations [1c]/[9c]; Ex1002 ¶147.

**k. [1c.iv.1]/[9c.iv.1]**[6]

Butler teaches these limitations. Ex1002 ¶¶148-151. Butler teaches that, when the hand vacuum cleaner is mounted to the rigid wand outlet end, the longitudinally extending conduit axis extends in a same direction as the central longitudinal axis. Ex1002 ¶¶148-149. Butler depicts its **connector/vacuum tube** axis (the longitudinally extending conduit axis) and its "**cyclone separator**" axis (the central longitudinal axis) as extending in the same direction when Butler's **connector/vacuum tube** is connected to Butler's "**nozzle inlet 504**":

[6] While the '030 Patent's face recites "central longitudinal axis of rotation," the USPTO issued a Certificate of Correction on 02/18/2020 changing this language to read "central longitudinal axis." Ex1004, 298.

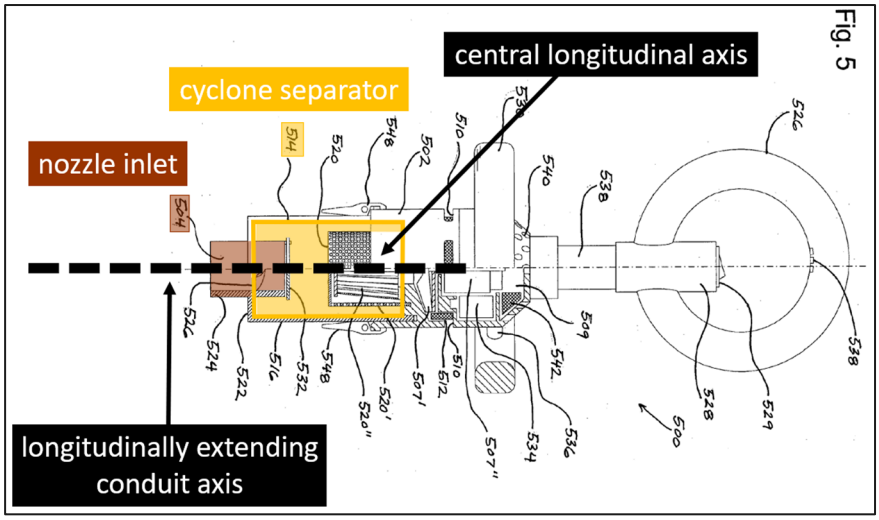


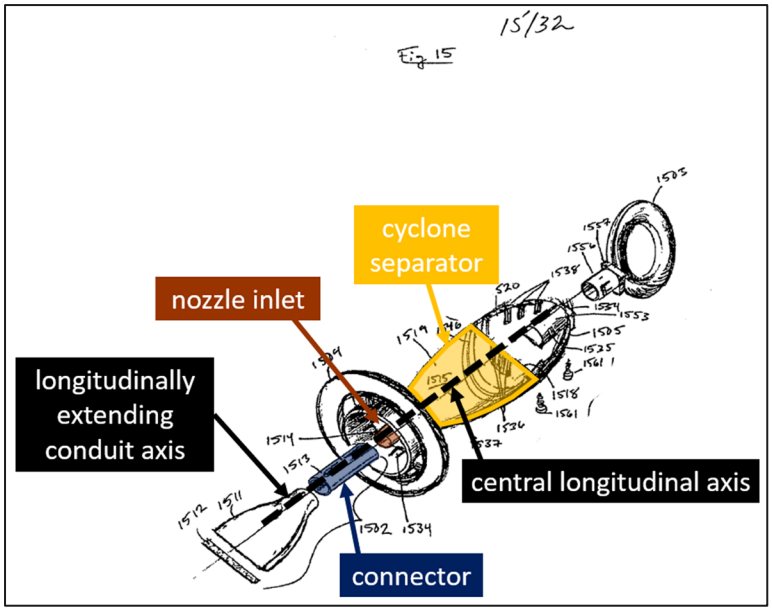


Ex1005, Figs. 5, 15; Ex1002 ¶150.

Regarding Limitation [1c.iv.1], a POSA would understand that Butler's air treatment member central longitudinal axis is a central longitudinal axis (and a central longitudinal axis of rotation) at least because, in Butler's "**cyclone separator**," air rotates cyclonically around that axis to separate dust. Ex1002 ¶151. For example, Butler teaches "initiat[ing] tangential airflow" using "a diverting

member" or by using "a helical ramp … to establish a cyclonic airflow pattern within the dirt receptacle 514." Ex1005, 18:15-21, 22:14-22. Ex1002 ¶151. For these same reasons, regarding Limitation [9c.iv.1], a POSA would understand that Butler's air treatment member central longitudinal axis is a central longitudinal axis of the air treatment member. Ex1002 ¶151.

**l. [1c.iv.2]/[9c.iv.2]**

Butler teaches these limitations. Ex1002 ¶¶152-162. Butler teaches that the hand grip portion has a hand grip portion axis that intersects the suction motor. Ex1002 ¶152. For example, Butler depicts that what a POSA would understand is a hand grip portion axis for Butler's foregrips intersects Butler's suction motor:

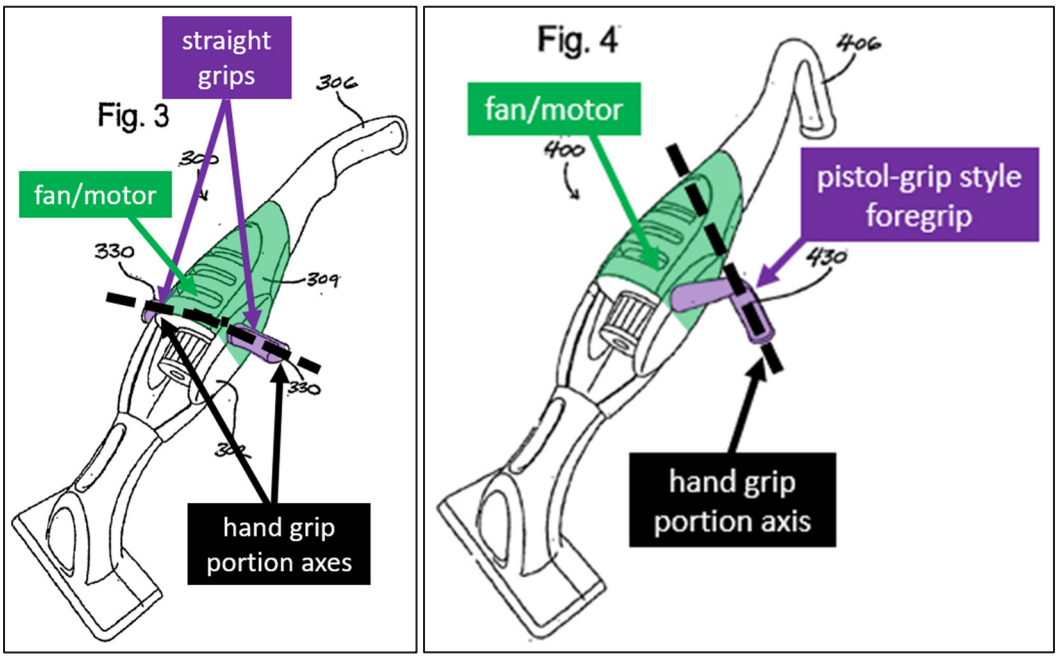

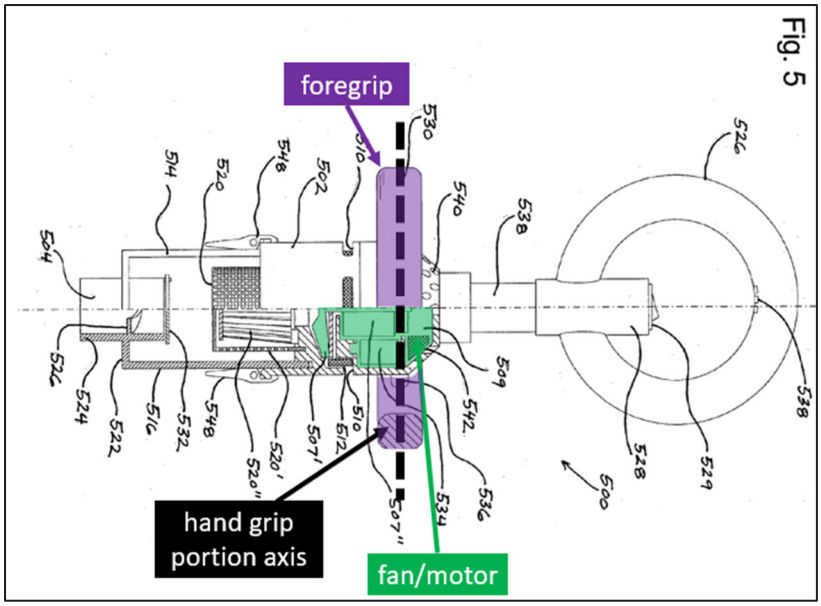


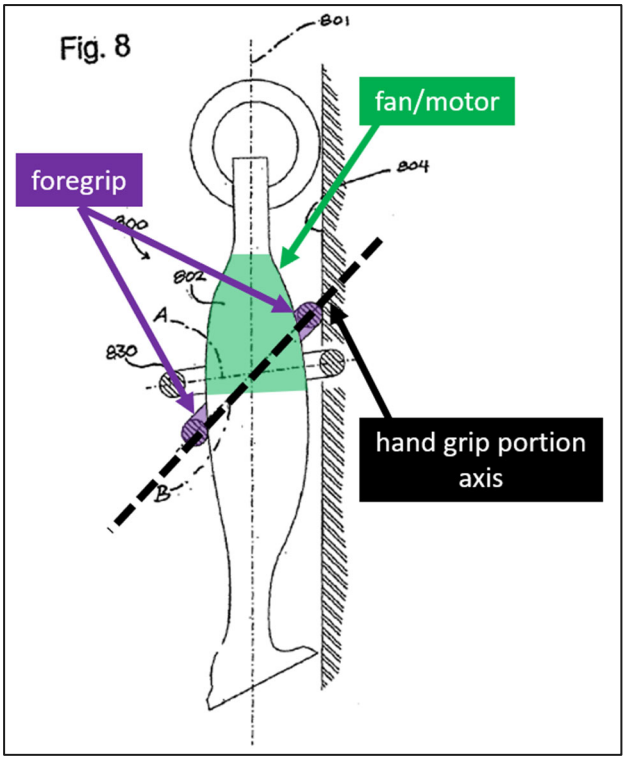


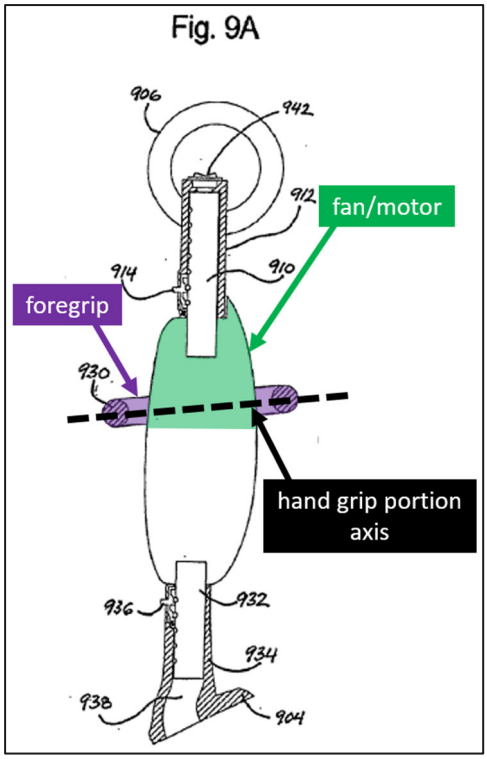


Ex1005, Figs. 3-4, 5, 8, 9A; Ex1002 ¶153.

Further, a POSA would understand that Butler's hand grip portion on each of Butler's rear grips has a hand grip portion axis that intersects the suction motor:

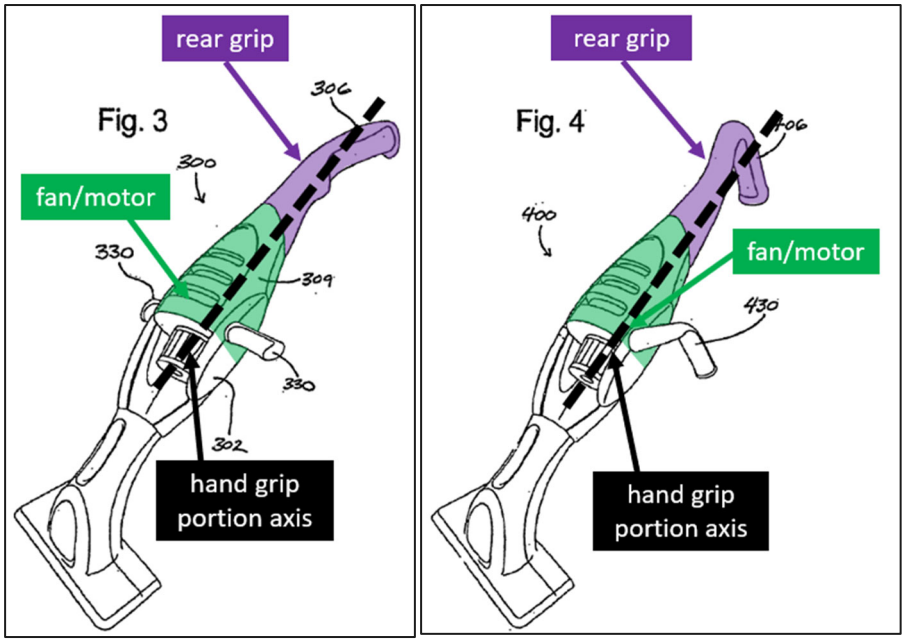


Ex1005, Figs. 3-4; Ex1002 ¶154.

As explained for Limitation [1c.i], Butler's "gripping surfaces" (hand grip portions) can be applied to any and all portions of each of Butler's handles. *See* Ground 1, Limitation [1c.i]. Thus, at least one hand grip portion axis of Butler's handles intersects Butler's suction motor, as depicted above. Ex1002 ¶155.

**2. [2]/[10]**

Butler anticipates claims 1 and 9 and teaches the remaining limitations of these claims. Ex1002 ¶¶156-162. Butler teaches that the hand grip portion extends linearly outwardly from a sidewall of the main body. Ex1002 ¶¶156-158. Butler's "cylindrical housing 502 [has] a … circular or looped **foregrip 530**":

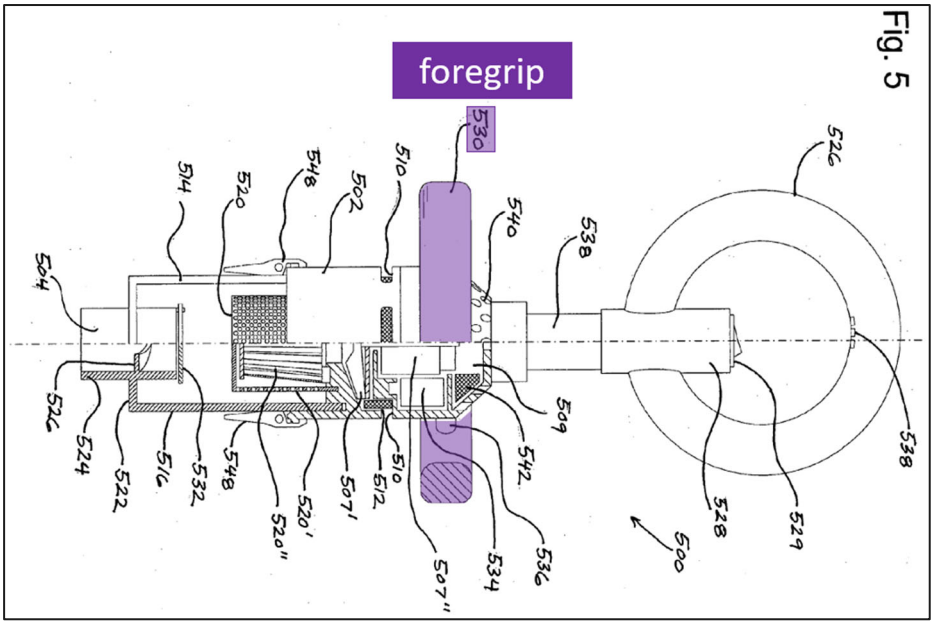


Ex1005, 20:4-6, Fig. 5; Ex1002 ¶159. The "foregrip 530 is attached to the housing 502 by a number of radially extending posts 536." Ex1005, 20:7-11, 20:28-30. As explained for Limitation [1c.i], Butler's hand grip portion ("gripping surfaces") can be applied to any portion of any of Butler's grips. *See* Ground 1, Limitation [1c.i]; Ex1002 ¶160.

A POSA would understand that Butler's "cylindrical housing 502" is a sidewall of the main body, at least because it is an external wall, and that Butler's "foregrip 530" is a handle that has a hand grip portion that extends linearly outwardly from a sidewall of the main body, as depicted above. Ex1002 ¶161.

Further, Butler teaches that its other types of grips having hand grip portions that a POSA would understand extend linearly outwardly from a sidewall of the main body, as depicted below:

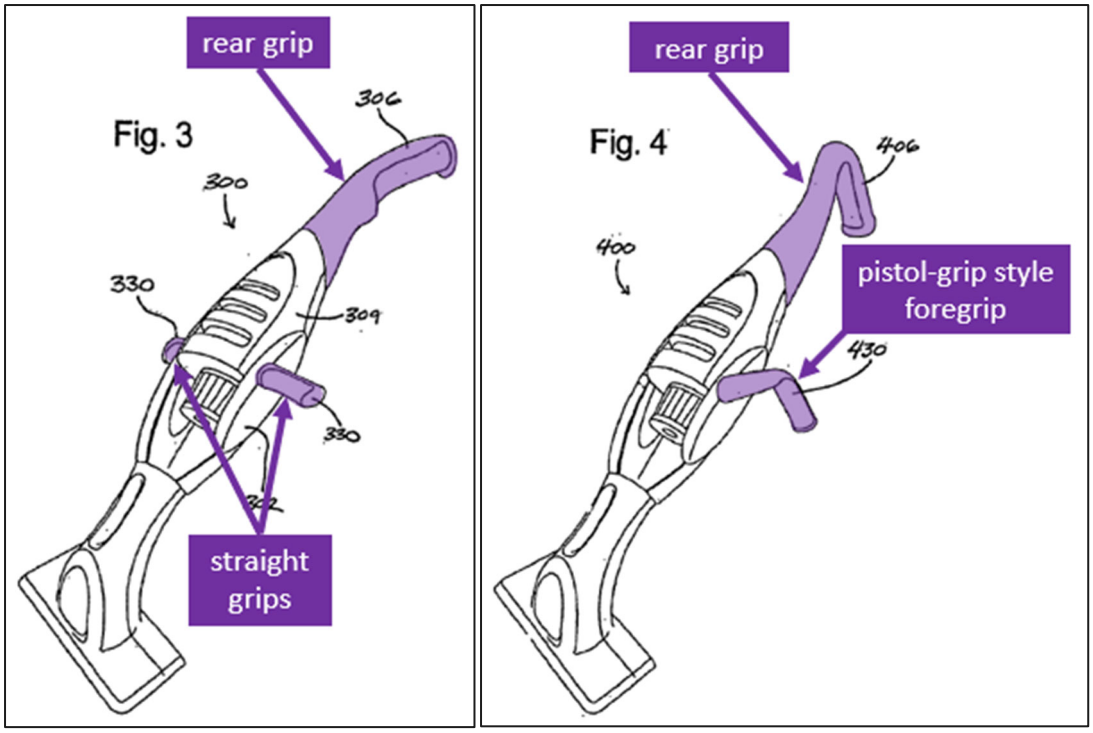


Ex1005, Figs. 3-4; Ex1002 ¶162.

**3. [3]**

Butler anticipates claim 1 and teaches the remaining limitations of this claim. Ex1002 ¶¶163-166. Butler teaches that the rigid air flow conduit is removably mounted to the surface cleaning head. Ex1002 ¶¶163-165. For example, Butler teaches that "[t]he inlet nozzle 104 may also be removable," and "[o]nce removed, other types of inlet nozzle (such as dusters, crevice tools, and so on) may be attached to the vacuum cleaner 100, as known in the art." Ex1005, 9:21-25. Butler also teaches that "[t]he inlet portion 1708 of the **connector 1702** is telescopically received within the **nozzle 1701** and comprises a flexible nozzle-attaching **tab 1711** that corresponds to one or more **apertures 1712** in the **nozzle 1701** to secure the

**nozzle 1701** to the **connector**. Preferably, the operator can depress this **tab 1711** to remove the **nozzle 1701** from the **connector 1702**, or move the **nozzle 1701** between multiple axial or radial positions on the **connector 1702**":

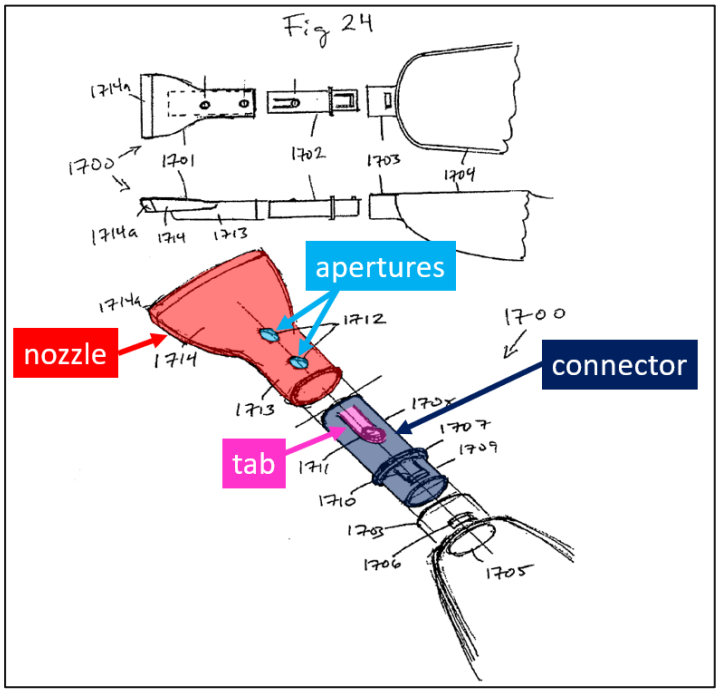


Ex1005, 41:26-42:1, Fig. 24; Ex1002 ¶166.

**4. [4]/[11]**

Butler anticipates claim 1 and teaches the remaining limitations of these claims. Ex1002 ¶¶167-171. Butler teaches that the central longitudinal axis intersects the hand grip portion, as shown below:

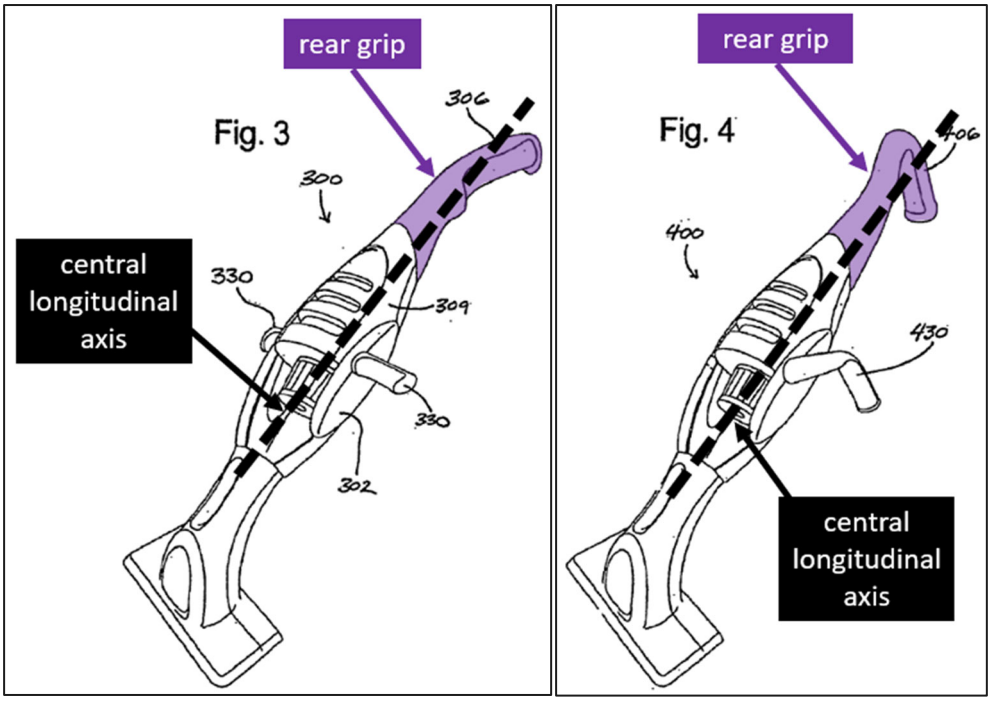


Ex1005, Figs. 3-4; Ex1002 ¶¶167-170. As explained for Limitation [1c.i], Butler's hand grip portion ("gripping surfaces") can be applied to any portion of any of Butler's grips. *See* Ground 1, Limitation [1c.i]; Ex1002 ¶171.

**5. [5]/[12]**

Butler anticipates claim 1 and teaches the remaining limitations of these claims. Ex1002 ¶¶172-175. Butler teaches that the suction motor and the handle are positioned rearward of the air treatment member:

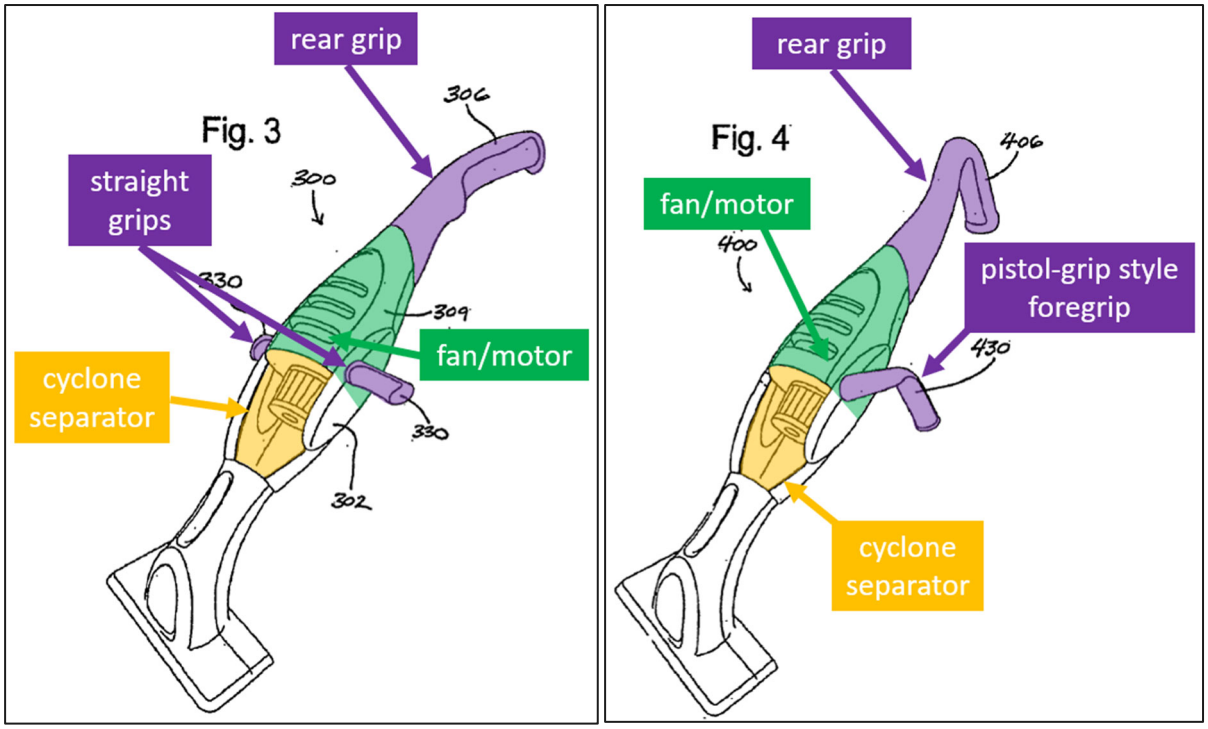


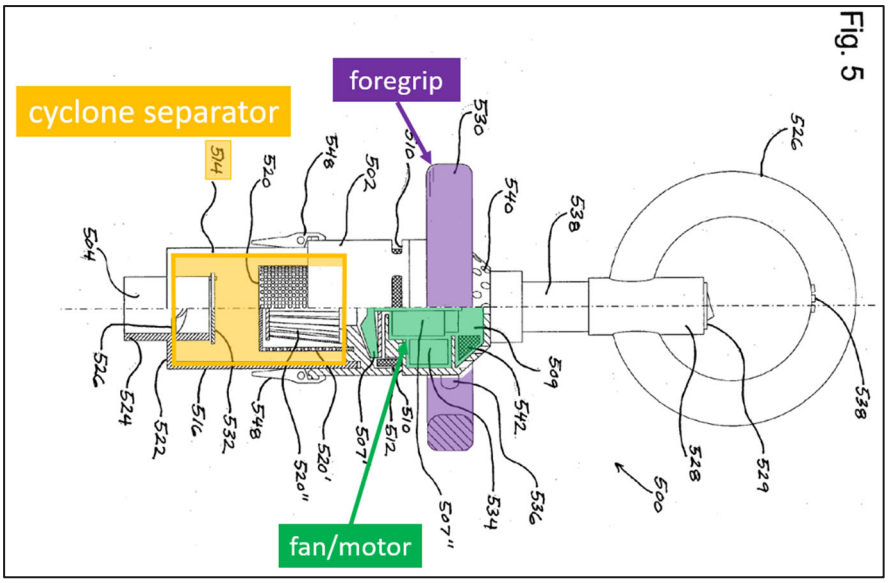


Ex1005, Figs. 3-5; Ex1002 ¶¶172-175.

**6. [6]**

Butler anticipates claim 1 and teaches the remaining limitations of this claim. Ex1002 ¶¶176-178. Butler teaches that the central longitudinal axis extends through the hand vacuum cleaner air inlet:

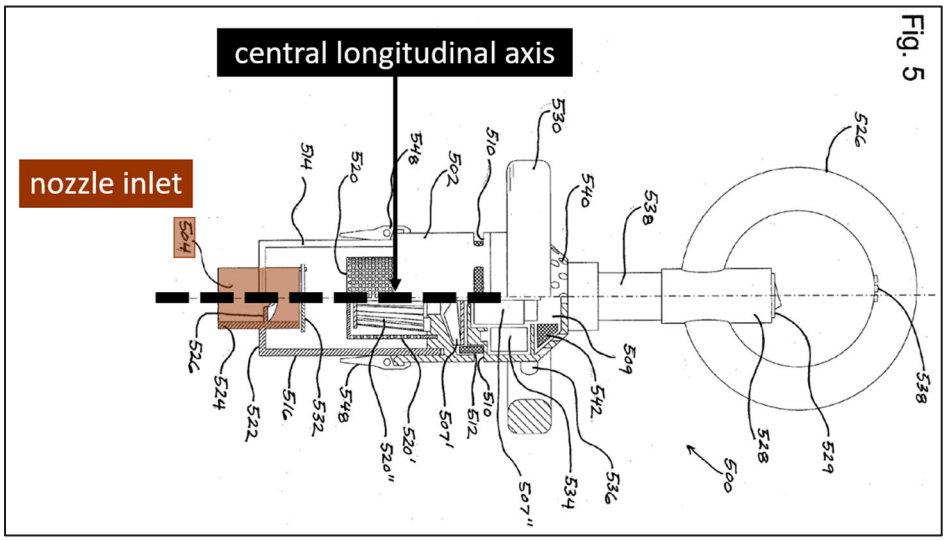


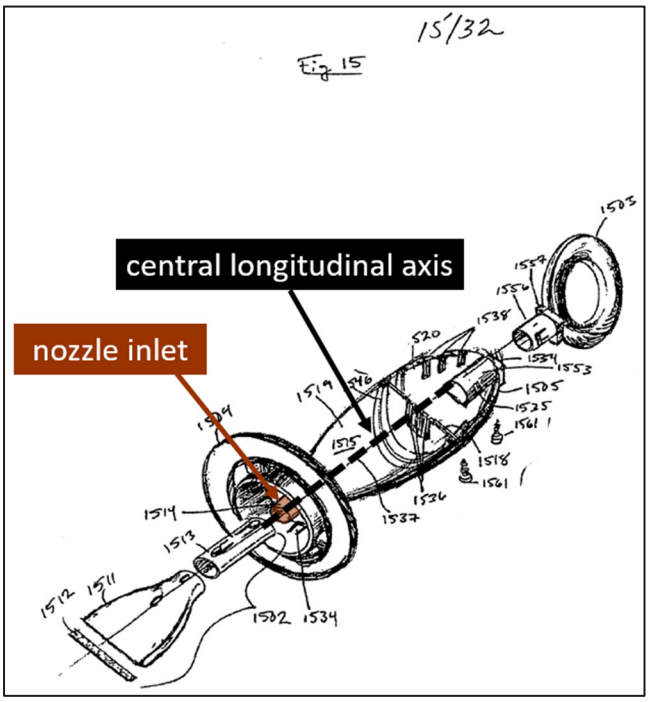


Ex1005, Figs. 5, 15; Ex1002 ¶¶176-178.

**7. [7]**

Butler anticipates claim 1 and teaches the remaining limitations of this claim. Ex1002 ¶¶179-181. Butler teaches that, when the hand vacuum cleaner is mounted to the rigid wand outlet end, the longitudinally extending conduit axis extends in the same direction as the central longitudinal axis of the air treatment member:

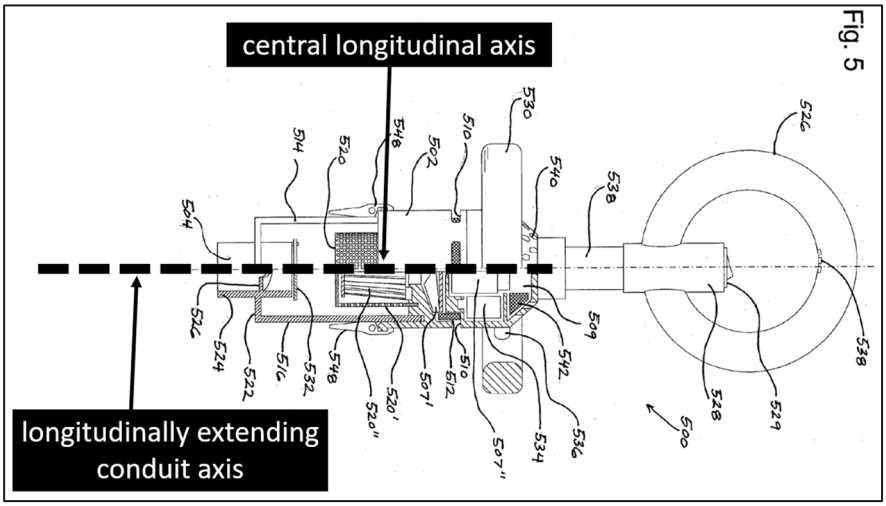


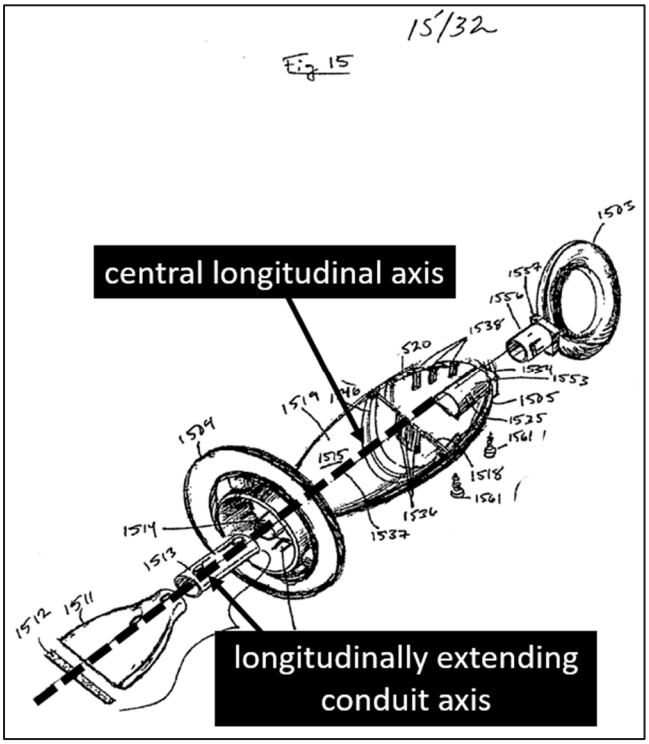

Ex1005, Figs. 5, 15; Ex1002 ¶¶179-181.

**8. [8]/[13]**

Butler anticipates claim 1 and teaches the remaining limitations of this claim. Ex1002 ¶¶182-188. Butler teaches that the air treatment member has a front face. Ex1002 ¶183. As explained for Limitation [1c.ii], Butler's "**dirt receptacle** compris[ing] a **cyclone separator**" has a "**bottom wall 522**," which a POSA would understand is a front wall of the air treatment chamber:

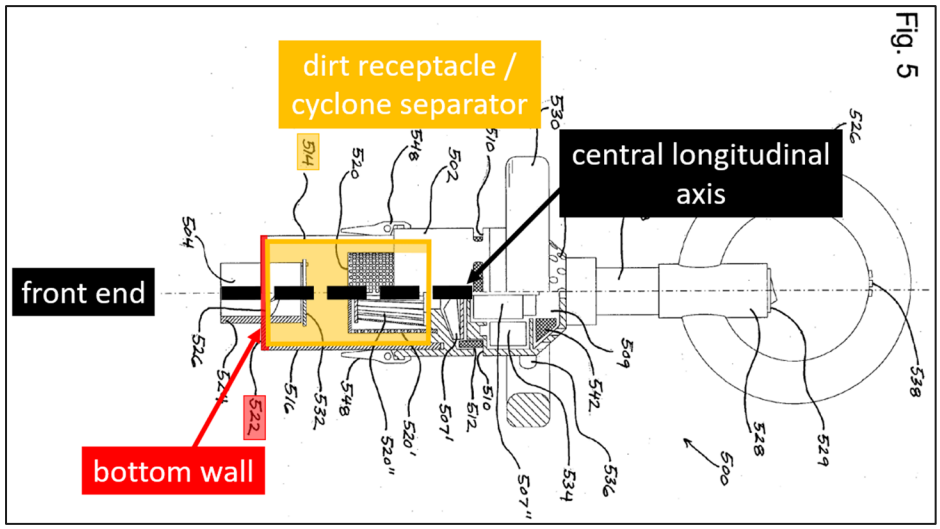


Ex1005, 21:21-23, Fig. 5; Ex1002 ¶¶184-185. A POSA would further understand that the front face of Butler's air treatment chamber front wall is the air treatment member front face, at least because it is the frontmost, most upstream surface of Butler's "**dirt receptacle** compris[ing] a **cyclone separator**." Ex1002 ¶186.

Butler also teaches that the hand vacuum cleaner electrical connector is positioned forward of the front face. Ex1002 ¶¶187-188. As explained for Limitations [1c.iv]/[9c.iv], a POSA would understand that Butler's "**entry tube**

524" includes an electrical connector provided on the front end of the cyclone separator to connect to "power leads" and power Butler's powered attachment:

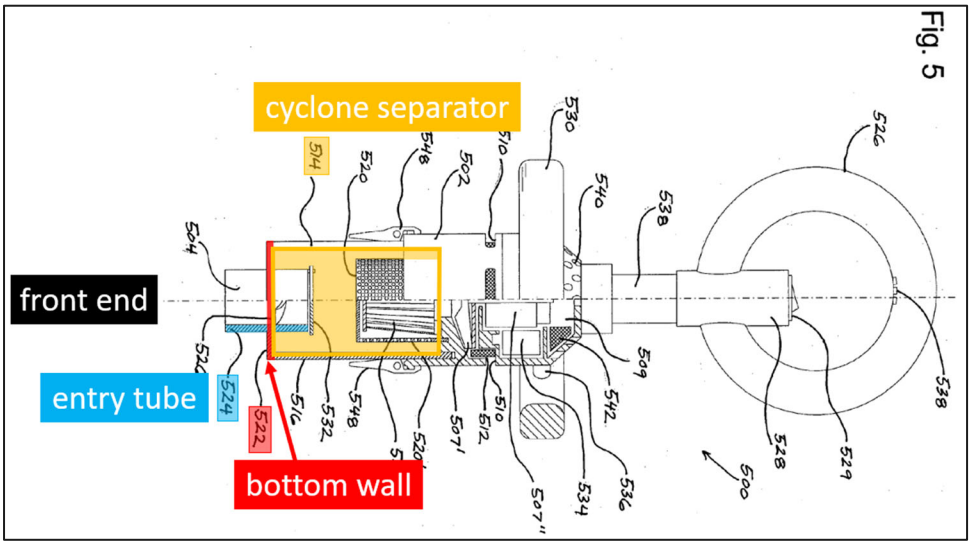


Ex1005, 22:6-11, Fig. 5; Ex1002 ¶¶187-188. A POSA would therefore understand that Butler's hand vacuum cleaner electrical connector is positioned forward of the front face, as depicted above. Ex1002 ¶¶187-188.

### B. Ground 2: Butler Renders Claims 1-13 Obvious

To the extent PO argues that Butler does not anticipate claims 1-13, Butler alone also renders them obvious. Ex1002 ¶189.

#### 1. Butler Teaches A Single Anticipatory System, But To The Extent PO Argues Otherwise, A POSA Would Have Combined Butler's Teachings

Butler teaches a single vacuum system, with all elements arranged as in the challenged claims, and therefore anticipates. *See* Ground 1; *see also* Ex1002 ¶190. To the extent PO argues that any of Butler's disclosures are not arranged as in the claims, a POSA would have combined them. Ex1002 ¶191. Butler expressly teaches

that its various components are combinable and "may be interchangeable with one another to provide the user with various cleaning options," Ex1005, 16:25-29; and that "the present invention includes embodiments in which the features described herein are used individually or in various other inventive combinations." *id.*, 43:29-44:3; s*ee also id.*, 4:17-28, 18:22-28, 19:9-15, 34:12-13 (components are combinable); Ex1002 ¶191. Combining Butler's components would have been obvious, with at least a reasonable expectation of success, including based on these teachings. Ex1002 ¶¶190-199.

#### 2. Butler Renders Obvious The Hand Vacuum Cleaner (Limitations [1c]/[9c])

To the extent PO argues that the preambles are limiting and that Butler does not teach "a hand vacuum," it would have been obvious for a POSA to further reduce Butler's size. *See* Ground 1, Limitations [1c]/[9c]; Ex1005, Abstract, 1:2-3, 13:1-19, 15:12-18, 26:1-10, 27:12-29; Ex1002 ¶200. As such, Butler's cleaner would be even more "maneuver[able]" and "compact," to achieve its purpose of cleaning "stairwells and other confined spaces." Ex1002 ¶201. A POSA would have at least a reasonable expectation of success, because it would involve simply reducing the size of certain components, such as Butler's "cylindrical housing 502," "dirt receptacle 514," "nozzle inlet 504," which would make Butler's cleaner smaller, and simply increasing the size of "connector 1702" to ensure a user could easily clean the floor and other surfaces while holding Butler's cleaner. Ex1002 ¶¶201-202.

### 3. Butler Renders Obvious The Electrical Connector And Cable Limitations (Limitations [1b.3]/[9b.3], [1c.iv]/[9c.iv], and Claims 8/13)

To the extent PO argues that Butler does not teach the limitations regarding electrical connectors and cables, Butler renders them obvious. Ex1002 ¶203. A POSA reading Butler's disclosures that "any type of cleaning device may be attached to the entry tube 524," and if a "powered attachment is provided, suitable power leads can be provided to connect the powered attachment to the electric circuit" would have been motivated to place an electrical connector on entry tube 524, at a location on the front end of the cyclone separator provided at a location adjacent the hand vacuum cleaner air inlet, and aligned with and connected to a rigid air flow conduit electrical connector when the hand vacuum cleaner is mounted to the rigid air flow conduit, which would have a corresponding rigid air flow conduit electrical connector. *See* Ground 1, Limitations [1b.3]/[9b.3], [1c.iv]/[9c.iv], Claims 8/13; Ex1005, 22:5-13, Fig. 5; Ex1002 ¶¶203-204.

Using electrical connectors was a well-known technique to predictably connect power leads, and it would have been obvious to try, as—if not the only solution—at most one of a finite number of solutions for doing so. Ex1002 ¶205. Locating an electrical connector at the rigid wand outlet end, locating a hand vacuum cleaner electrical connector on the front end of the air treatment member, adjacent the hand vacuum cleaner air inlet and forward of the air treatment member front face,

and making the hand vacuum cleaner electrical connector releasably connectable with the outlet end electrical connector would have been obvious as—if not the only locations—at most a finite number of identified locations for these connectors in light of Butler's disclosure, and they would have been the most logical locations to releasably connect the powered attachment to Butler's power leads, because that is where the powered attachment (and connecting rigid airflow conduit) connects to Butler's cleaner. *See* Ex1005, 22:6-11 ("any type of cleaning device may be attached to the entry tube 524," which is located adjacent Butler's hand vacuum cleaner air inlet, "nozzle inlet 504," and if a "powered attachment is provided, suitable power leads can be provided to connect the powered attachment to the electric circuit"); *id.* Fig. 5 (depicting "entry tube 524" as adjacent to "nozzle inlet 504"); Ex1002 ¶¶205-206. Further, it would have been obvious to modify Butler's electrical connectors (if necessary) to make them releasably connectable because Butler teaches that its connector/vacuum tube are releasably connectable to Butler's air inlet and are releasably connectable to Butler's surface cleaning heads. *See* Ground 1, Limitation [1c], Claim 3. A POSA would have at least reasonably expected success because it would have involved incorporating a well-known feature (electrical connectors) at locations where Butler teaches such a feature should be incorporated. Ex1002 ¶207.

### C. Ground 3: Peter In Combination With Neroni Renders Claims 1-13 Obvious

#### 1. Motivation To Combine Peter And Neroni

Peter teaches a hand/stick vacuum cleaner from 1939:

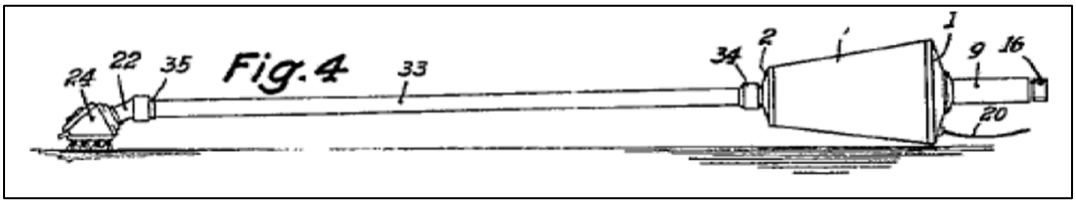


Ex1007, Fig. 4.

Peter's cleaner has a "**housing**" with a "**dust filter [17]**" that separates dirt from air:

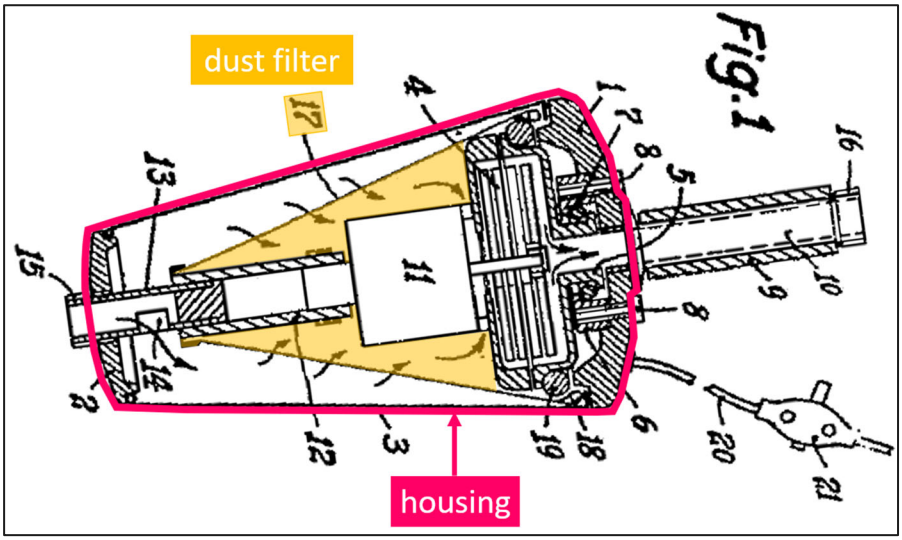


Ex1007, 2, Fig. 1; Ex1002 ¶208.

Peter's cleaner has "an **extension rod 33**," which can be "inserted between the vacuum cleaner housing and the **pipe angle [22]**," which is "[t]he main accessory of the vacuum cleaner," in conjunction with "**suction piece 24**":

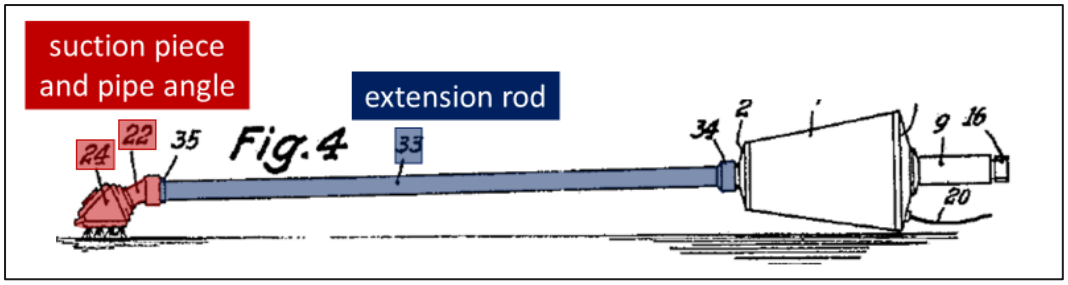


Ex1007, 2-3; Ex1002 ¶209. Peter's "suction piece 24" has "**suction opening[s] 26, 27**," which enable multi-directional cleaning from its top and bottom:

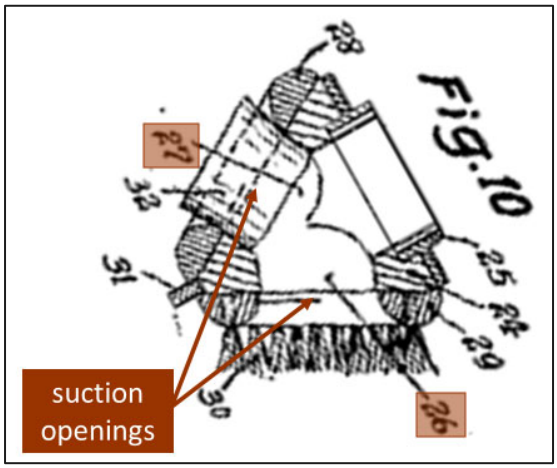


Ex1007, 2, Fig. 10; Ex1002 ¶210.

Peter's vacuum cleaner includes "**rubber grip 9**" on "**exhaust nozzle 10**":

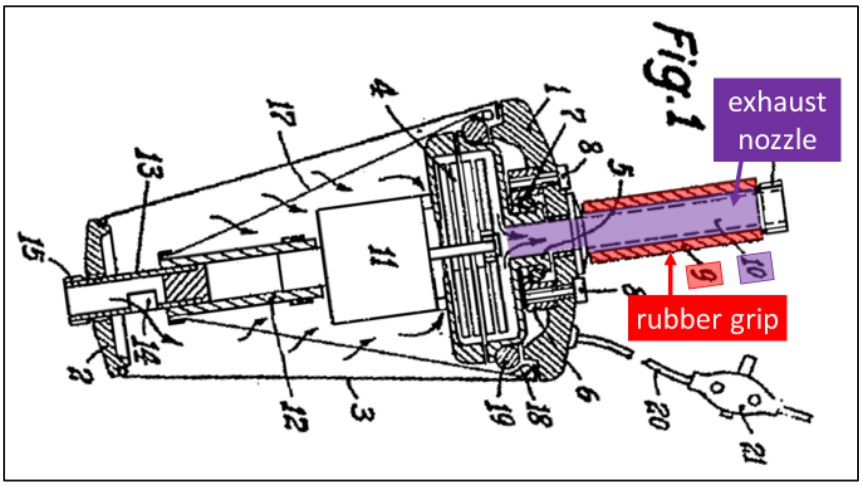

Ex1007, 2, Fig. 1; Ex1002 ¶211.

Neroni teaches a vacuum cleaner with an electrically-powered tool. Neroni has a "**female power receptacle 16**" on the outside surface of a **tank 12**. Ex1008, 3:34-36. "**[R]eceptacle 16** is used to supply electrical power through the **hose assembly 11** into the **adapter 20**, and then to **motor P** of the power cleaning tool 17." *Id*. at 3:36-39.

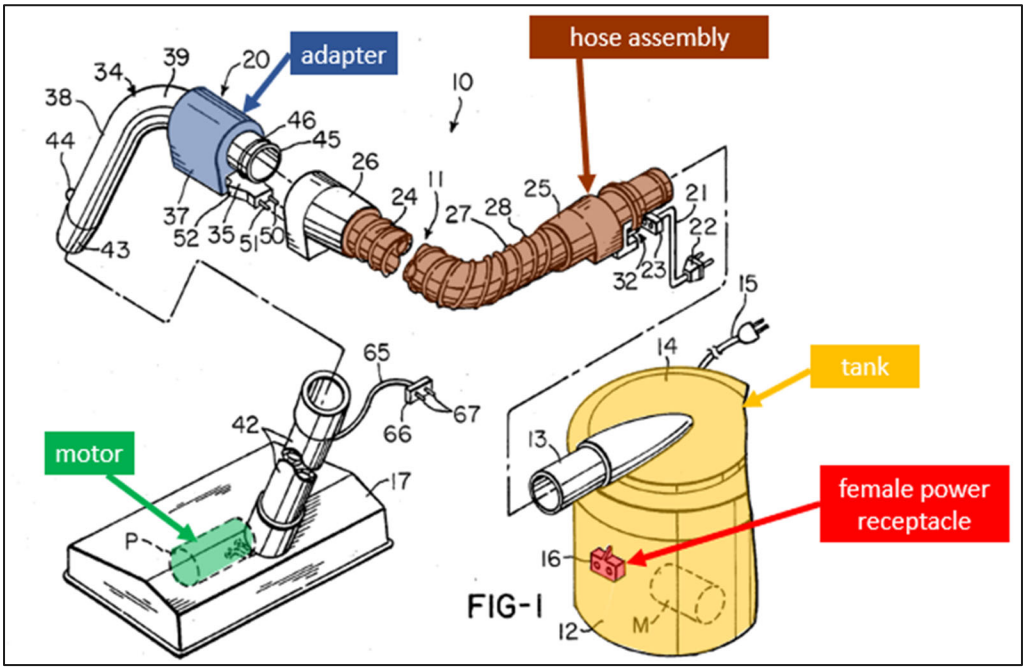


Ex1008, 3:34-49, Fig. 1; Ex1002 ¶212. Neroni's "**tank 12**," also referred to as "**cleaner 12**[,] has an integral vacuum unit" and that "because such vacuum unit is of conventional construction[,] it will not be shown or described." *Id*., 3:29-33, Fig. 1. Ex1002 ¶213.

A POSA reading Peter would have been motivated to incorporate Neroni's teachings. Ex1002 ¶214.

A POSA would have been motivated to use a powered cleaning tool with Peter (either by modifying Peter's suction "accessory" ("suction piece 24" and "pipe angle 22"), or by using a separate powered cleaning tool) and to incorporate Neroni's teachings of a power cleaning tool adaptor. Ex1002 ¶215. A POSA would have understood that powered cleaning tools were common, as Neroni explains. Ex1008, 1:17-49; Ex1002 ¶215. A POSA would have understood that powered cleaning tools improve cleaning certain surfaces by agitating them, including surfaces such as certain upholstery and carpet where dust can accumulate in the upholstery/carpet fibers, which would further Peter's stated purpose of "effortlessly" cleaning "upholstered furniture," "floors, carpets, and the like," and would have reasonably expected success. Ex1007, 1-2; Ex1002 ¶215. For example, in 2006, US2006/0026788 to Fischer explained that "simple brushes or crevice tools without electrically powered features or accessories" are "limit[ed]" in "both their cleaning power and usefulness," but "a powered cleaning tool attachment including a motor driven rotary agitator, a headlight and/or a booster fan" can provide benefits such as "additional cleaning power" and "greater cleaning efficiency," including by "scrub[bing] and beat[ing] dirt and debris from the nap of an underlying carpet being cleaned." Ex1009 ¶¶5, 6, 20, 22. A POSA would have understood the well-known benefits of a powered floor tool and would have been motivated to incorporate Neroni's electrical system into Peter to achieve these benefits. Ex1002 ¶216.

A POSA would have reasonably expected success incorporating Neroni's teachings into Peter's. Ex1002 ¶217. A POSA would understand that Neroni's power cleaning tool adaptor teachings, including power leads and power connectors, were well-known, as Neroni explains (Ex1008, 1:17-49), that their incorporation would have simply required the addition of well-known parts—namely, Neroni's "female power receptacle 16," which "is used to supply electrical power" and "electrical cord assembly," which is used to transfer electrical power and "which is provided with a male fitting 22"—and that they would predictably result in delivering power to the surface cleaning tool. Ex1008, 3:34-49; Ex1002 ¶217. Further, they would at least have been obvious to try as there were a finite number of predictable solutions for transferring power to a powered surface cleaning accessory—namely, through electrical connectors on the accessory, wand, and vacuum cleaner to which that wand and accessory connects. Ex1002 ¶217.

**2. [1]/[9]**

**a. [1pre]/[9pre]**

To the extent the preambles are limiting, Peter teaches a surface cleaning apparatus. Ex1002 ¶¶218-219. Peter teaches a "vacuum cleaner" for "cleaning floors, carpets" and other "surface[s] to be cleaned." Ex1007, Title, 2.

**b. [1a]/[9a]**

Peter teaches these limitations. Ex1002 ¶¶220-221.

Peter teaches a surface cleaning head: "**suction piece 24**" connected to "**pipe angle 22**":

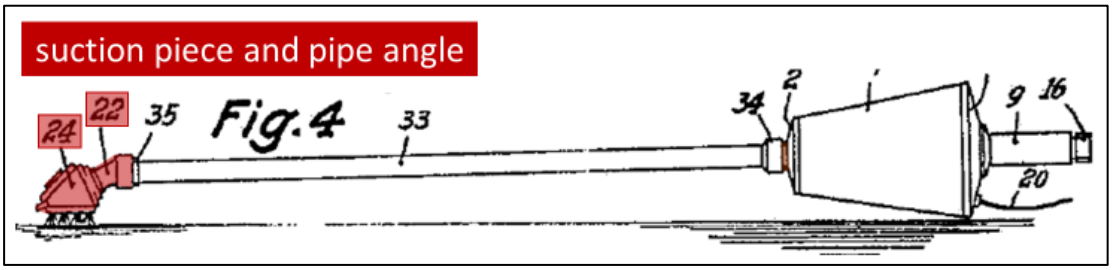


Ex1007, 2, Fig. 4; Ex1002 ¶221. A POSA would understand that, together, "suction piece 24" and "pipe angle 22" are a surface cleaning head. Ex1002 ¶221.

Peter's "**suction piece 24**" and "**pipe angle 22**" assembly has a **front end** and a **rear end**:

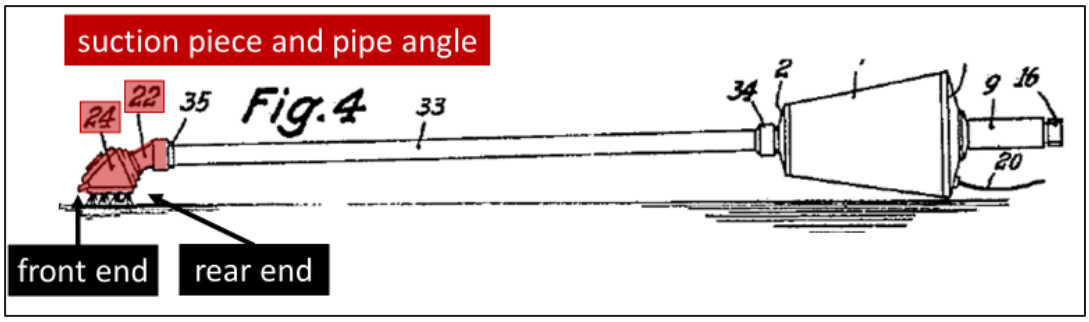


Ex1007, Fig. 4; Ex1002 ¶222.

Peter's surface cleaning head has a dirt air inlet and a cleaning head outlet. Ex1002 ¶223. In Peter, air flows into the "**suction piece 24**" via a **first opening**, and exits "**pipe angle 22**" via a **second opening**:

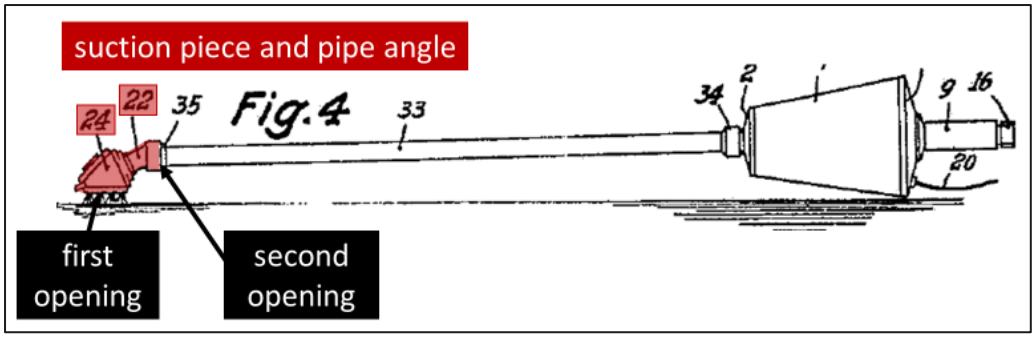


Ex1007, Fig. 4; Ex1002 ¶224. Peter's first opening is a dirt air inlet, and Peter's second opening is a cleaning head air outlet. Ex1002 ¶225. A POSA would have been motivated to incorporate a powered surface cleaning head with Peter, including by modifying Peter's surface cleaning head ("suction piece 24" and "pipe angle 22"). *See* Ground 3, §1. When so modified, Peter likewise meets these limitations. Ex1002 ¶226.

**c. [1b.1]/[9b.1]**

Peter teaches these limitations. Ex1002 ¶¶227-232.

Peter teaches a rigid air flow conduit: "**extension rod 33**" can be "inserted between the vacuum cleaner housing," at "**air intake nozzle 13**," and "**pipe angle 22**,"

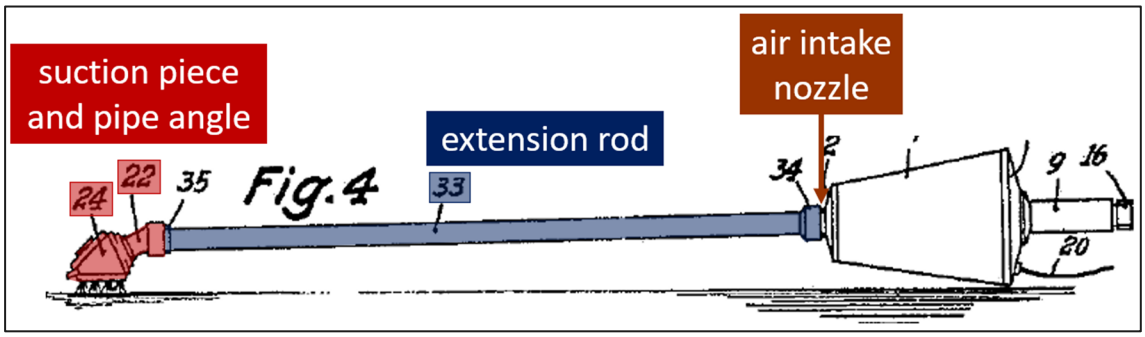

Ex1007, 2-3, Fig. 4; Ex1002 ¶¶227-228. A POSA would understand that Peter's "**extension rod 33**" is rigid, as shown above. Ex1002 ¶229.

Peter's "**extension rod 33**" has a rigid wand inlet end having an air inlet that communicates with the cleaning head air outlet: the upstream end of Peter's "**extension rod 33**" is a rigid wand inlet end with an air inlet at least because that is where air enters the "**extension rod 33**" from the **second opening** of Peter's "**suction piece 24**" and "**pipe angle 22**" (the cleaning head air outlet):

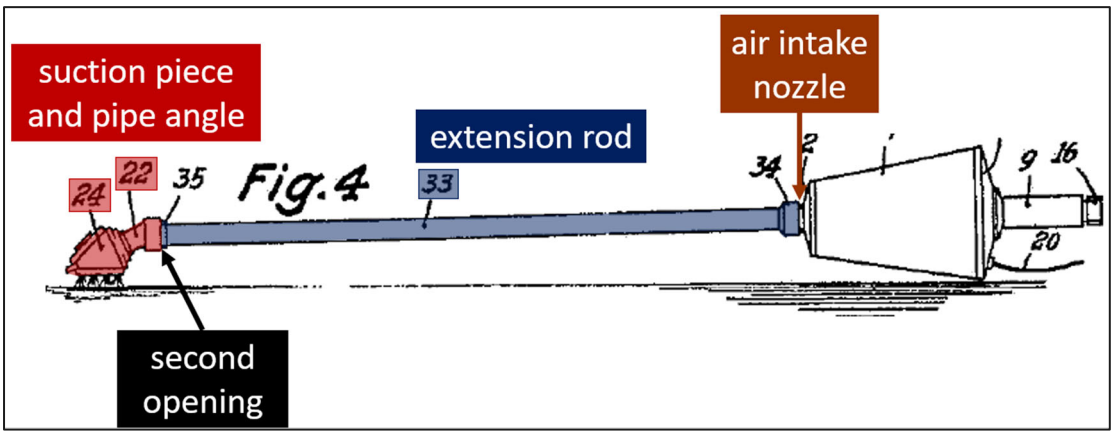


Ex1007, 2, Fig. 4; Ex1002 ¶230.

Peter's "**extension rod 33**" has a rigid wand outlet end at the downstream end of the "**extension rod 33**," where it connects to the "**air intake nozzle 13**," as shown above, at least because this is where air exits the "**extension rod 33**." Ex1007, Fig. 4; Ex1002 ¶231.

Peter's "**extension rod 33**" has a longitudinally extending conduit axis:

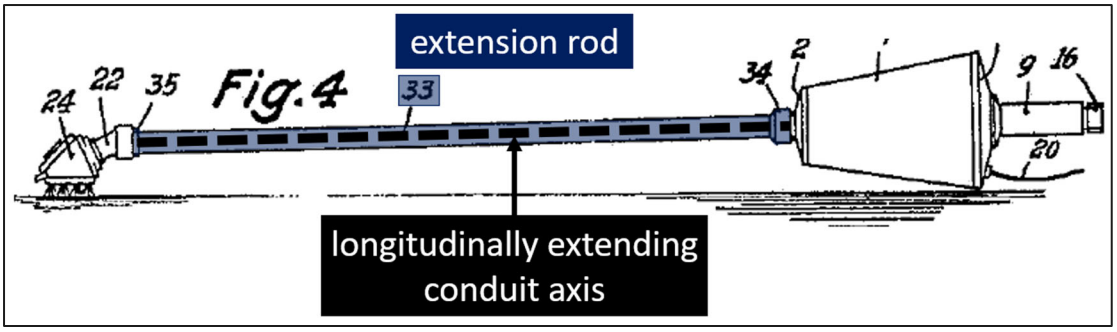


Ex1007, Fig. 4; Ex1002 ¶232.

**d. [1b.2]/[9b.2]**

Peter teaches these limitations. Ex1002 ¶¶233-237.

Peter teaches the rigid air flow conduit is moveably mountable to the surface cleaning head. Ex1002 ¶233. Peter's extension rod 33 (the rigid air flow conduit) is moveably mounted to the surface cleaning head using rotatable connecting threads. Ex1002 ¶234. Peter teaches that the "connecting threads between the pipe angle 22 and the suction piece 24 are not fully tightened but can still rotate slightly," which "allows the suction edges of the suction piece to always rest well on the surface to be cleaned, whereby the inclination of the extension rod in relation to the floor can be changed." Ex1007, 2. A POSA would understand that this is a moveable mount between Peter's "extension rod 33" (the rigid air flow conduit) and "pipe angle 22" / "suction piece 24" (together the surface cleaning head) because it allows the extension rod and surface cleaning head to pivot relative to each other while maintaining a physical and an air-flow connection. Ex1002 ¶234.

Peter teaches that the rigid air flow conduit is moveably mountable to the surface cleaning head between an upright position and an in-use floor cleaning position in which the rigid air flow conduit extends at an angle to the vertical. Ex1002 ¶235. For example, Peter teaches that the "connecting threads between the pipe angle 22 and the suction piece 24" allow the "inclination of the extension rod in relation to the floor [to] be changed," which "makes it easy to work under tables, chairs, and similar furniture," and enables "effortless[]" cleaning of "the floor or walls." Ex1007, 2. A POSA would understand that such "extension rod" "inclination" positions include an upright position and an in-use floor cleaning position in which the rigid air flow conduit extends at an angle to the vertical. Ex1002 ¶235.

Further, Peter's "suction piece 24" has "**suction opening[s] 26, 27**," which enable multi-directional cleaning from its top and bottom:

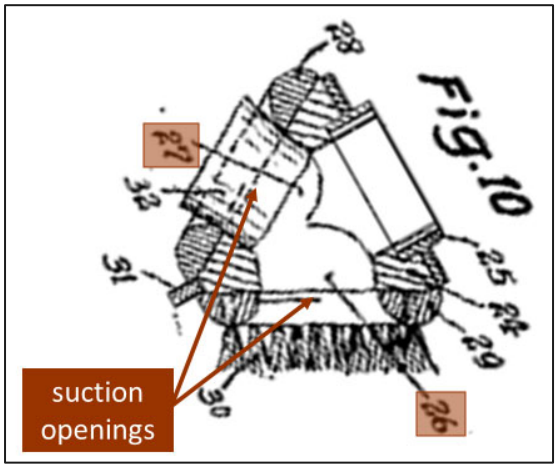

Ex1007, 2, Fig. 10; Ex1002 ¶236. A POSA would understand that, to utilize suction piece 24's multi-directional cleaning, Peter's extension rod 33 would be moveable between an upright position and an in-use floor cleaning position in which the rigid air flow conduit extends at an angle to the vertical. Ex1002 ¶237.

**e. [1b.3]/[9b.3]**

Peter in combination with Neroni teaches these limitations. Ex1002 ¶¶238-242.

A POSA would understand that Peter's rigid wand outlet end has an air outlet where it connects to the hand vacuum:

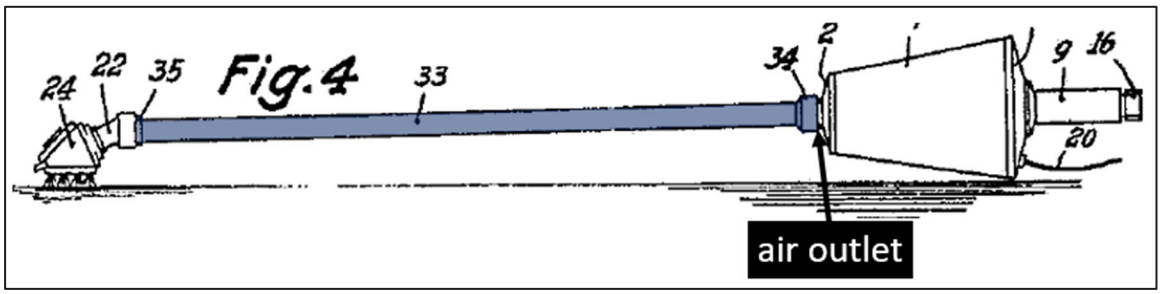


Ex1007, Fig. 4; Ex1002 ¶239.

Further, Neroni teaches an air flow conduit outlet end electrical connector: "hose assembly 11" with "**electrical connector 32**" attaches to "female fitting 23," and "male fitting 22 … for connection to the **receptacle 16**":

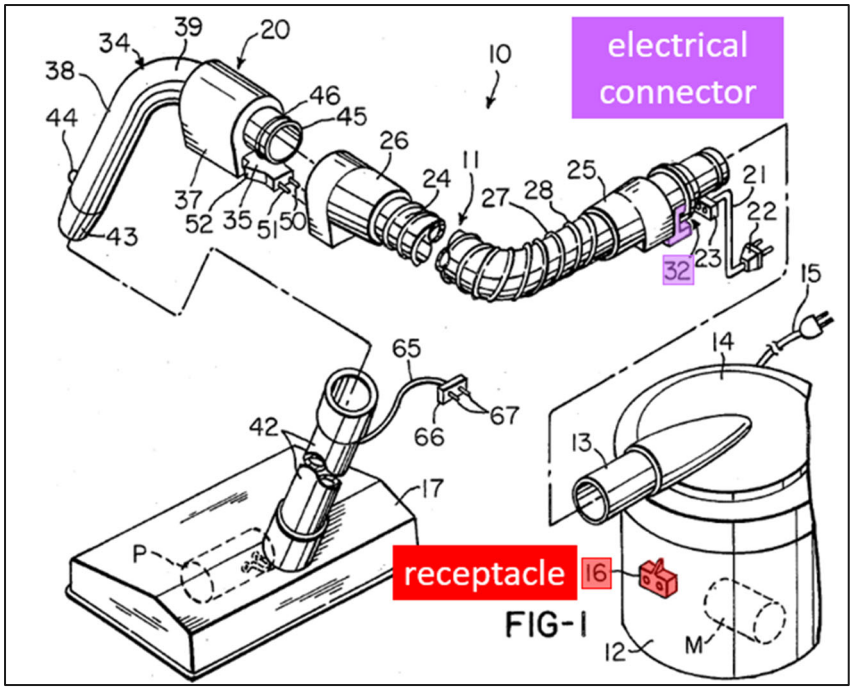


Ex1008, 3:34-49; 4:7-10, Fig. 1; Ex1002 ¶240. "The **receptacle 16** is used to supply electrical power through the hose assembly 11 into the adapter 20, and then to motor P of the power cleaning tool 17." *Id.*, 3:36-42. A POSA would understand that Neroni's "electrical connector 32," "female fitting 23," and "male fitting 22" are individually (and together) an air flow conduit electrical connector, and that they are located at the outlet end of Neroni's air flow conduit, at least because that is where air exits the "hose assembly 11." Ex1002 ¶241.

A POSA would have been motivated to incorporate Neroni's "electrical connector 32" teachings, including "female fitting 23" and "male fitting 22," into Peter's rigid extension rod 33 to power its floor tool and would have a reasonable expectation of success. *See* Ground 3, §1; Ex1002 ¶242. Thus, the combined teachings of Peter and Neroni teach these limitations. Ex1002 ¶242.

**f. [1c]/[9c]**

Peter teaches these limitations. Ex1002 ¶¶243-248.

Peter teaches a "vacuum cleaner" that is designed to be used by hand and is a hand vacuum cleaner. Ex1007, 1; Ex1002 ¶243. Peter's hand vacuum cleaner includes "exhaust nozzle 10" surrounded by "**rubber grip 9**" for handling:

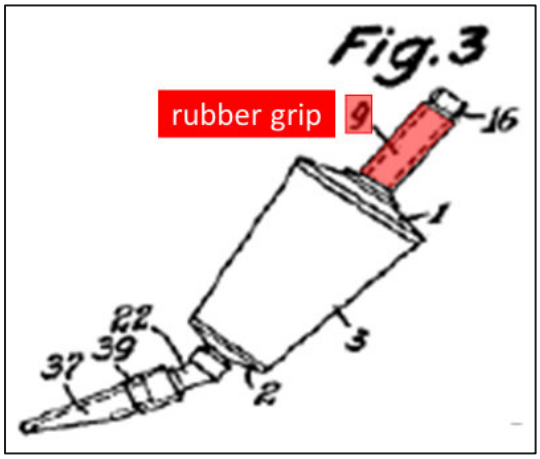


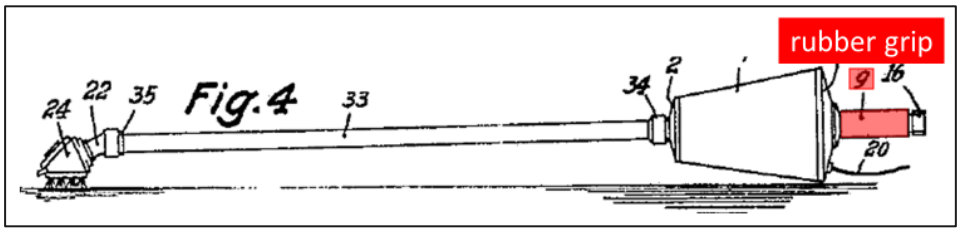


Ex1007, 1, Figs. 3-4; Ex1002 ¶244.

Peter's hand vacuum cleaner is removably mountable to the rigid wand outlet end: "**extension rod 33**" can be "inserted between the vacuum cleaner housing," at "**air intake nozzle 13**," and "**pipe angle 22**":

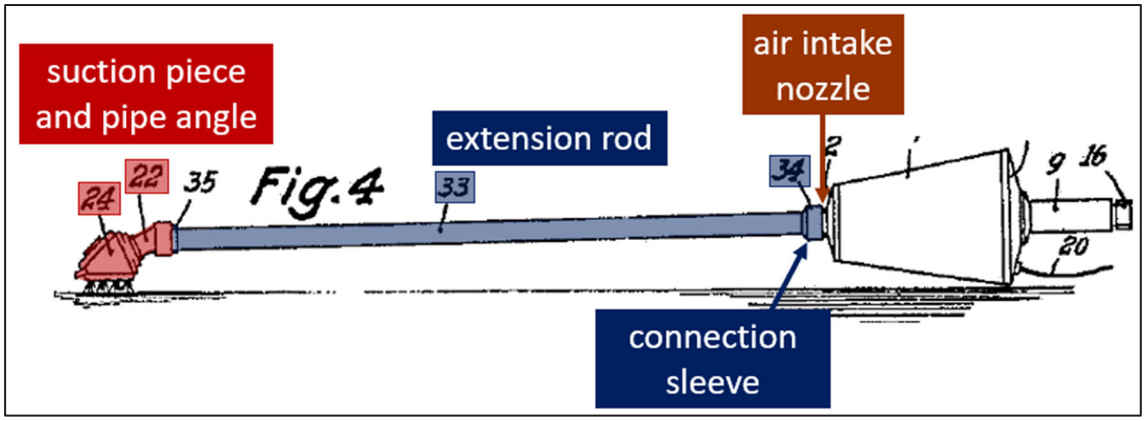


Ex1007, 2-3, Fig. 4; Ex1002 ¶245. "**[E]xtension rod 33** [] has a **connection sleeve 34** at one end," i.e., the rigid wand outlet end, that connects to "connecting thread 15 of the **air intake nozzle 13**." Ex1007, 2. When desired, "[t]he extension rod 33 can be omitted":

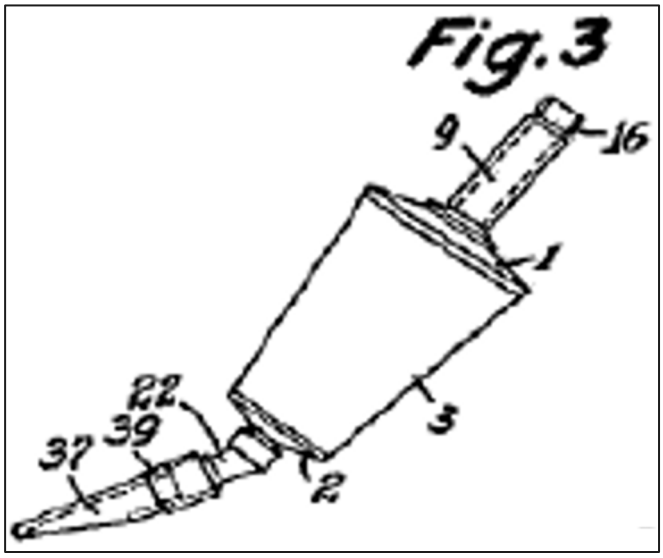


Ex1007, 3, Fig. 3. Peter's hand vacuum cleaner is thus removably mounted to "extension rod 33's" outlet end. Ex1002 ¶246.

Peter's hand vacuum cleaner has a front end and a rear end:

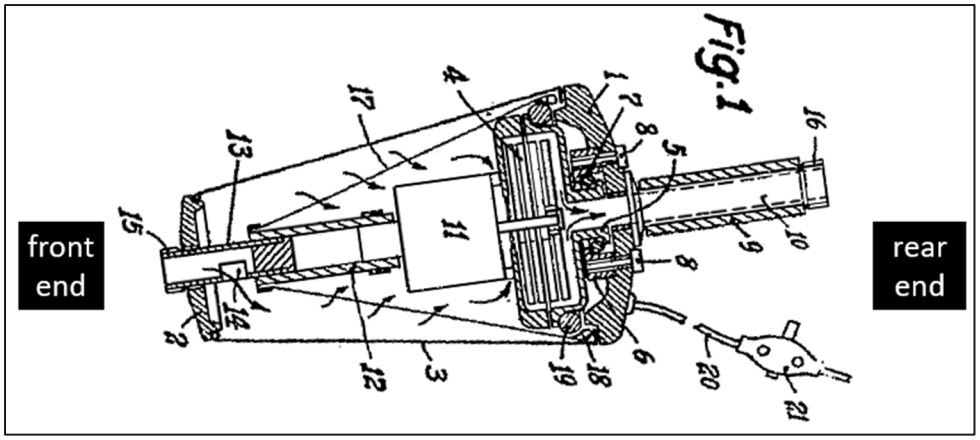


Ex1007, Fig. 1; Ex1002 ¶¶247-248.

**g. [1c.i]/[9c.i]**

Peter teaches these limitations. Ex1002 ¶¶249-254.

Peter's hand vacuum cleaner has a main body, as shown in Figure 1:

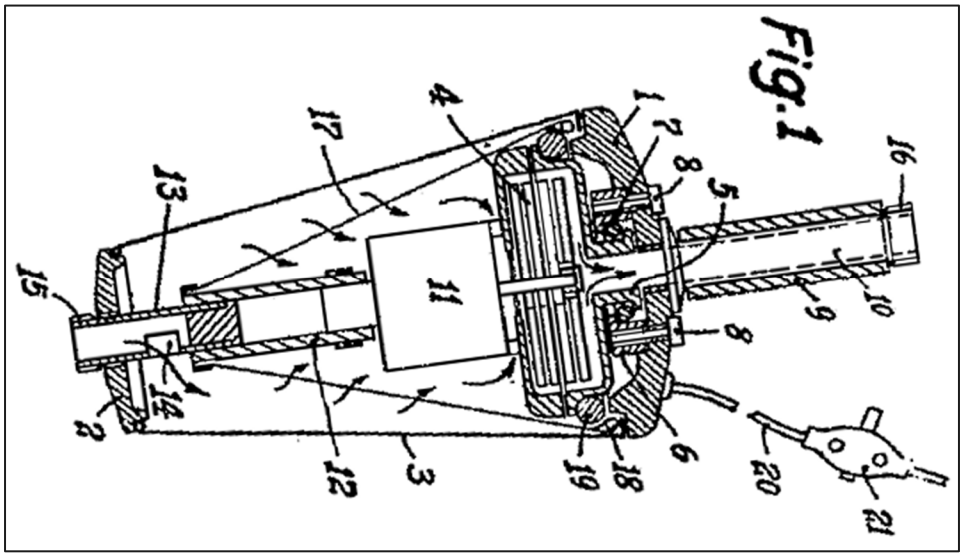


Ex1007, Fig. 1; Ex1002 ¶250.

Peter's main body comprises a handle having a hand grip portion: "**exhaust nozzle 10**," which is covered by "**rubber grip 9**":

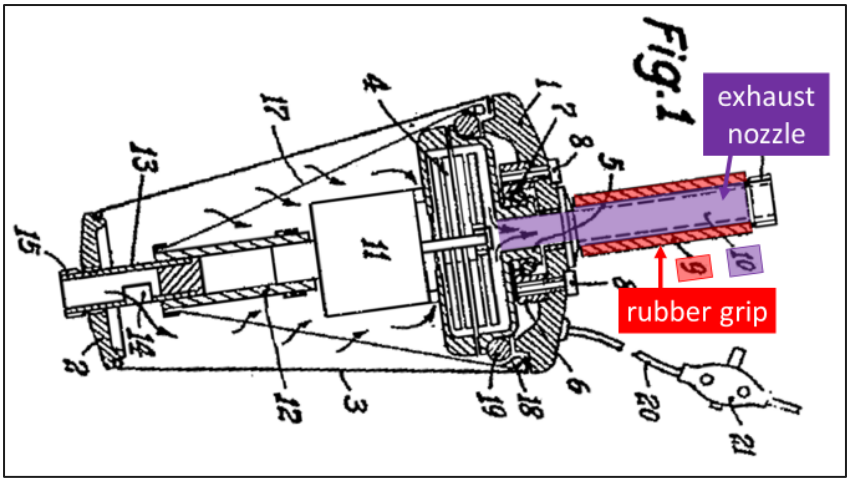


Ex1007, 2, Fig. 1; Ex1002 ¶251. Peter's "**exhaust nozzle 10**" is a handle, and Peter's "**rubber grip 9**" is a hand grip portion. Ex1002 ¶252.

Peter's main body further comprises a suction motor and fan assembly. Ex1002 ¶253. Peter's body comprises a "**fan**" and a "**motor 11**," which a POSA would understand includes a suction motor axis of rotation:

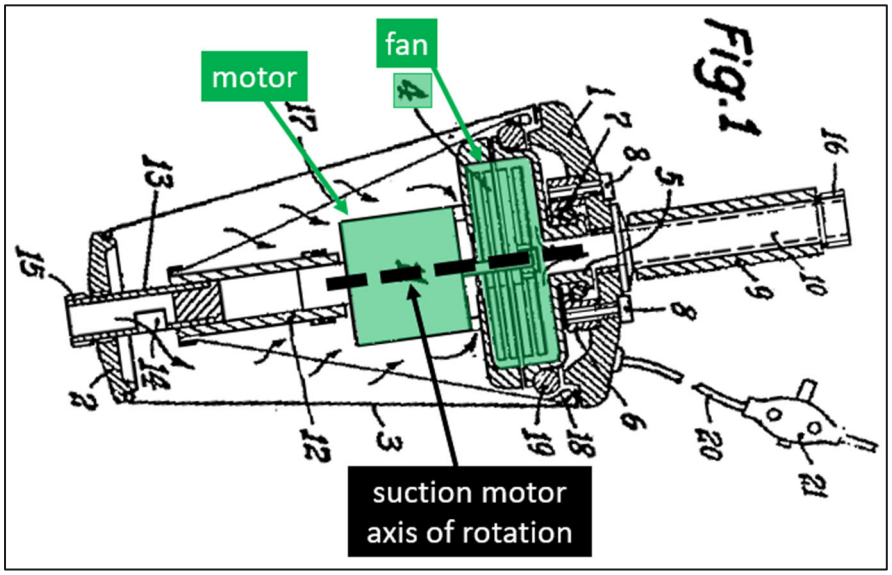

Ex1007, 2, Fig. 1; Ex1002 ¶253. A POSA would understand that the suction motor axis of rotation is the axis through the center of Peter's "**fan**" and **motor 11**," around which Peter's "**fan**" rotates. Ex1002 ¶254.

**h. [1c.ii]/[9c.ii]**

Peter teaches these limitations. Ex1002 ¶¶255-260.

Peter teaches an air treatment member provided at the front end of the hand vacuum cleaner, "**dust filter [17]**," with a central longitudinal axis as shown:

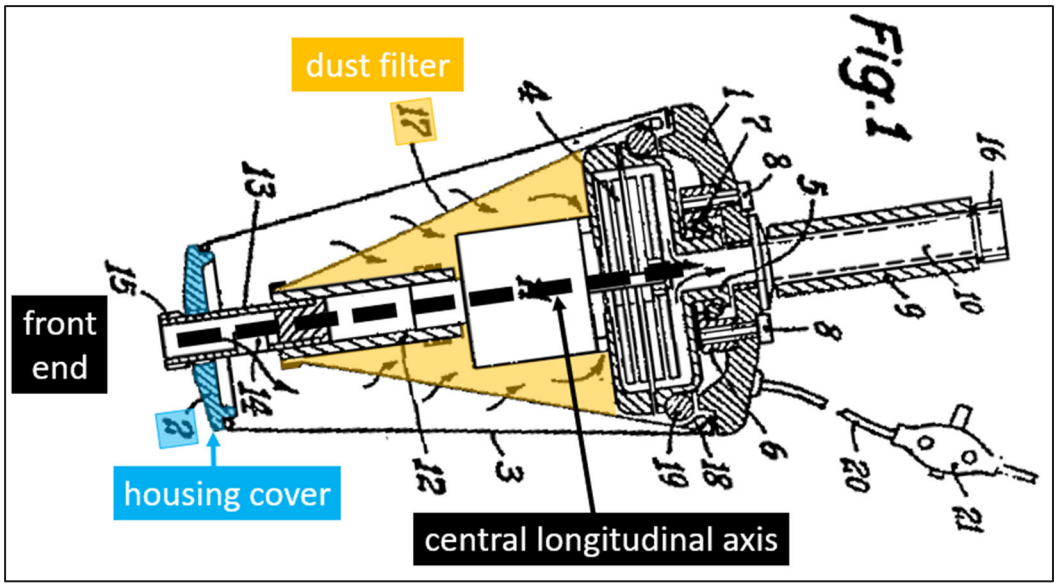


Ex1007, 2, Fig. 1; Ex1002 ¶¶255-257. Additionally, Peter's vacuum has an "air intake nozzle 13" with a "**lateral outlet opening 14**" at the front end that a POSA would understand creates cyclonic airflow within the conical "housing":

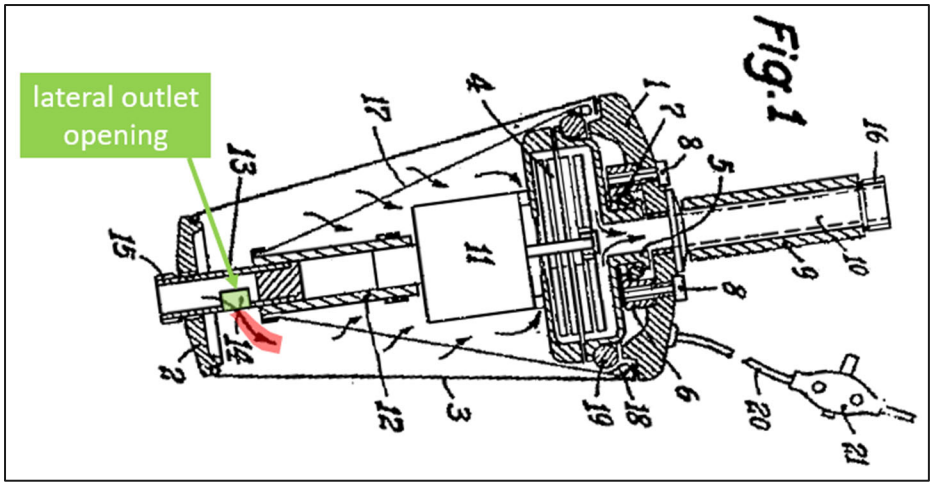


Ex1007, 2, Fig. 1; Ex1002 ¶258. A POSA would understand that this cyclonic airflow is also an air treatment member provided at the front end because it treats air by separating dust using cyclonic airflow.

Peter's "**dust filter [17]**" is located in an air treatment chamber, which includes "casing 3" and a front wall: "**housing cover 2**," as shown above. Ex1002 ¶¶259-260. A POSA would understand that Peter's "**dust filter [17]**" is an air treatment member at least because it treats the air by filtering dust. Ex1002 ¶¶259-260.

**i. [1c.iii]/[9c.iii]**

Peter teaches these limitations. Ex1002 ¶¶261-268.

Peter teaches a hand vacuum cleaner air inlet. Ex1002 ¶261. In Peter, air enters the cleaner via "**air intake nozzle 13** … which passes through the **housing cover 2**":

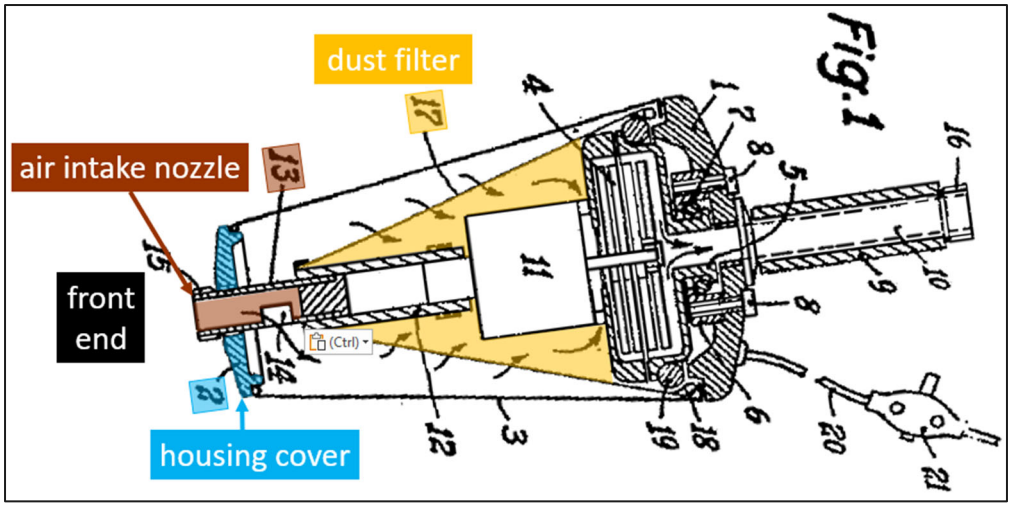


Ex1007, 2, Fig. 1; Ex1002 ¶¶262-263. Peter's "**air intake nozzle 13**" is a hand vacuum cleaner air inlet. Ex1002 ¶264.

Regarding Limitation [1c.iii], Peter teaches that its hand vacuum cleaner air inlet is centrally positioned with respect to the air treatment chamber front wall. Ex1002 ¶265. As shown above, Peter's "**air intake nozzle 13**" is centrally positioned (radially and top-to-bottom) with respect to Peter's "**housing cover 2**" (the air treatment chamber front wall). Ex1002 ¶265.

Regarding Limitation [9c.iii], Peter teaches that the hand vacuum cleaner air inlet is provided on the front end of the air treatment member. Ex1002 ¶266. As shown above, Peter's "**air intake nozzle 13**" is provided on the front end of Peter's air treatment member, because it is provided on Peter's air treatment chamber front wall ("**housing cover 2**") and because it is provided at the upstream end of Peter's air treatment member. Ex1002 ¶266.

For the reasons explained for Limitations [1c]/[9c], Peter teaches that the hand vacuum cleaner air inlet is releasably connectable with the air outlet of the rigid wand. *See* Ground 3, Limitations [1c]/[9c]; Ex1002 ¶267.

Regarding Limitation [9c.iii], Peter teaches that the hand vacuum cleaner air inlet has an inlet axis that is coaxial with the central longitudinal axis. Ex1002 ¶268. A POSA would understand that Peter's "**air intake nozzle 13**" has an inlet axis, as shown below, and that it is coaxial with Peter's central longitudinal axis, as Peter depicts in Figure 1:

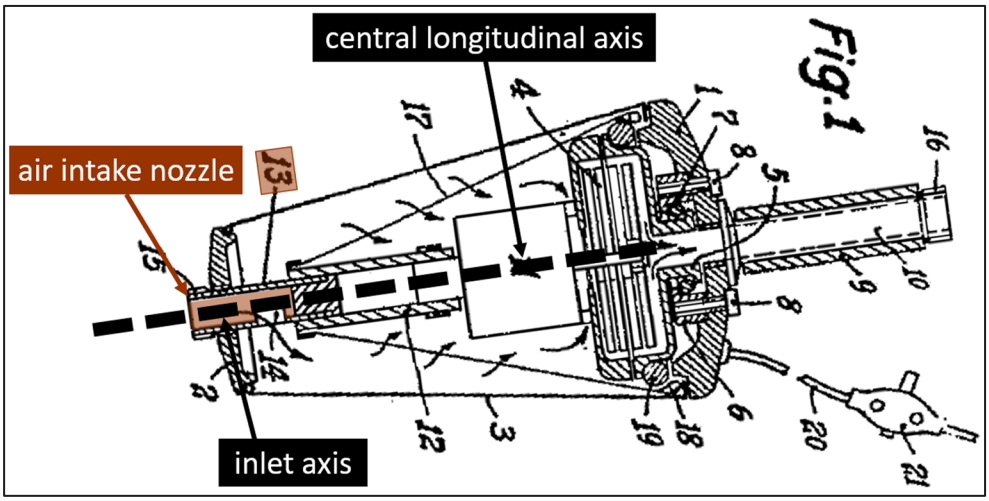


Ex1007, Fig. 1; Ex1002 ¶268.

**j. [1c.iv]/[9c.iv]**

Peter in combination with Neroni teaches these limitations. Ex1002 ¶¶269-276.

Neroni teaches an electrical connector provided on the front end of a separation unit, adjacent the air inlet. Ex1002 ¶269. Neroni's vacuum has a "**female**

**power receptacle 16** disposed on the outside surface of its **tank 12**," adjacent "**vacuum tube 13**":

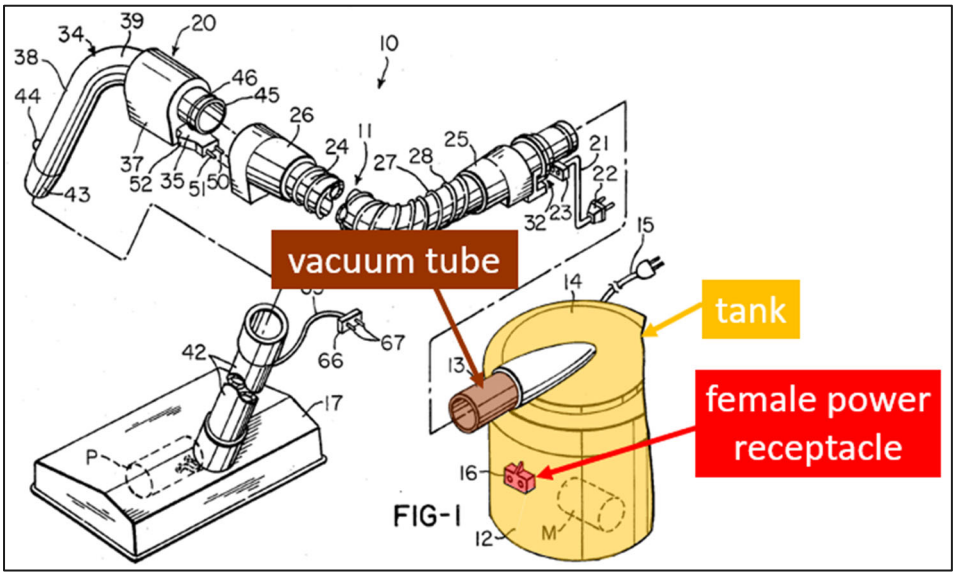


Ex1008, 1:22-24, 3:34-49; Ex1002 ¶270; *see also* Ground 3, Limitations [1b.3]/[9b.3]. "The **receptacle 16** is used to supply electrical power through the hose assembly 11 into the adapter 20, and then to motor P of the power cleaning tool 17." Ex1008, 3:36-42. A POSA would have understood that Neroni's "power receptacle 16" is an electrical connector, and that it is disposed on the front end of the separation unit, adjacent "vacuum tube 13" (the air inlet). Ex1002 ¶¶270-271.

Like Neroni, Peter's "**air intake nozzle 13**" is at the front of the air treatment member:

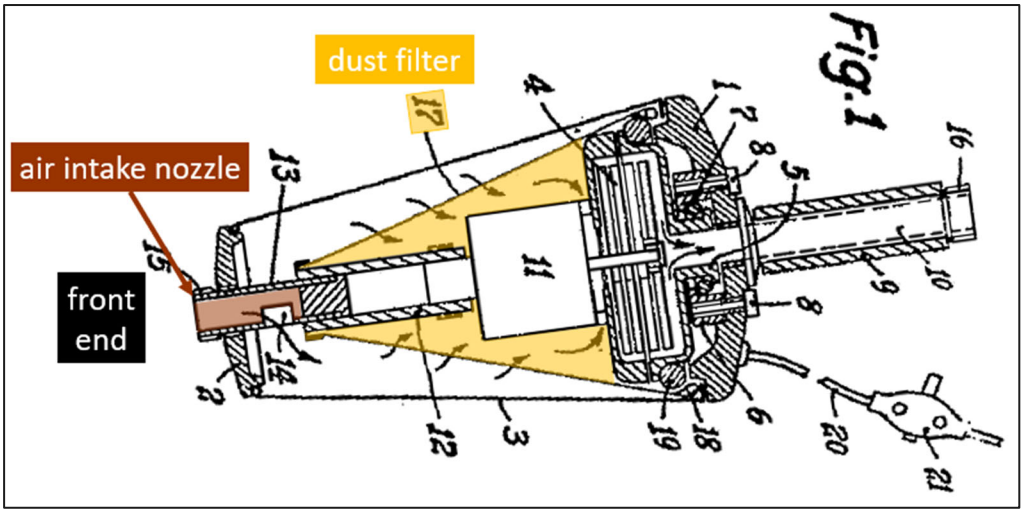


Ex1007, 1, Fig. 1; Ex1002 ¶272; *see also* Ground 3, Limitations [1c.iii]/[9c.iii].

A POSA would have been motivated to implement Neroni's "power receptacle 16" on the front end of Peter's air treatment member adjacent the hand vacuum cleaner air inlet, and would have reasonably expected success. Ex1002 ¶273. A POSA would have understood that this was one of a finite number of identified locations for the connector, and it would have been the most convenient location to connect a powered attachment to Neroni's "cord assembly 21A," because that is where the powered attachment (and rigid airflow conduit connecting the powered attachment to the vacuum cleaner) connects to Peter's cleaner. Ex1002 ¶273; *see also* Ground 3, Limitations [1b.3]/[9b.3]. In the combined teachings of Peter and Neroni, a hand vacuum cleaner electrical connector is provided on the front end of the air treatment member, adjacent the hand vacuum cleaner air inlet:

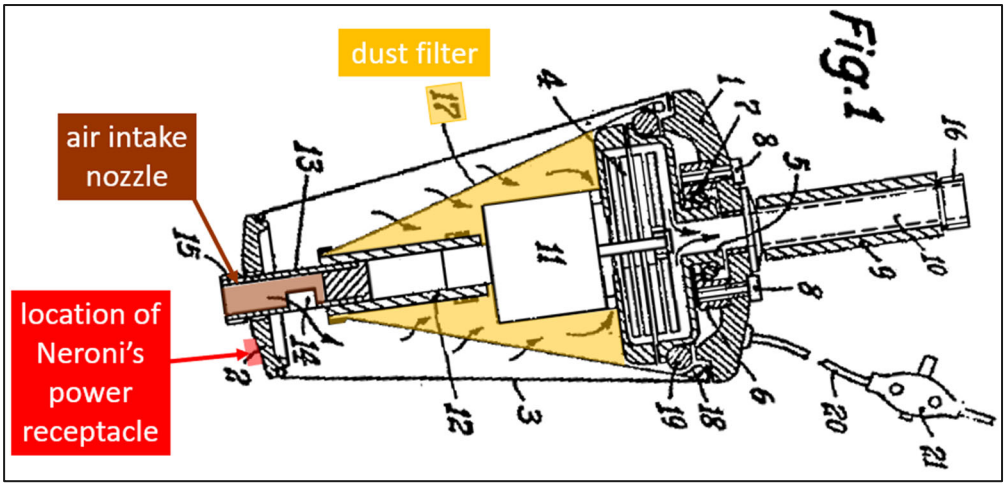


Ex1007, Fig. 1; Ex1002 ¶¶273-274.

Further, a POSA would understand that in the combined teachings of Peter and Neroni, the hand vacuum cleaner electrical connector is releasably connectable with the rigid wand outlet end electrical connector to provide electrical circuitry to Peter's powered attachment, because Peter teaches a releasably engageable extension rod, as explained for Limitations [1c]/[9c]. *See* Ground 3, Limitations [1c]/[9c]; Ex1002 ¶276; *see also* Ground 3, Limitations [1b.3]/[9b.3].

**k. [1c.iv.1]/[9c.iv.1]**

Peter teaches these limitations. Ex1002 ¶¶277-280.

Peter teaches that, when the hand vacuum cleaner is mounted to the rigid wand outlet end, the longitudinally extending conduit axis extends in a same direction as the central longitudinal axis. Ex1002 ¶¶277-278. Peter's longitudinally extending conduit axis and central longitudinal axis extend in the same direction when Peter's "**extension rod 33**" is connected to Peter's "**air intake nozzle 13**":

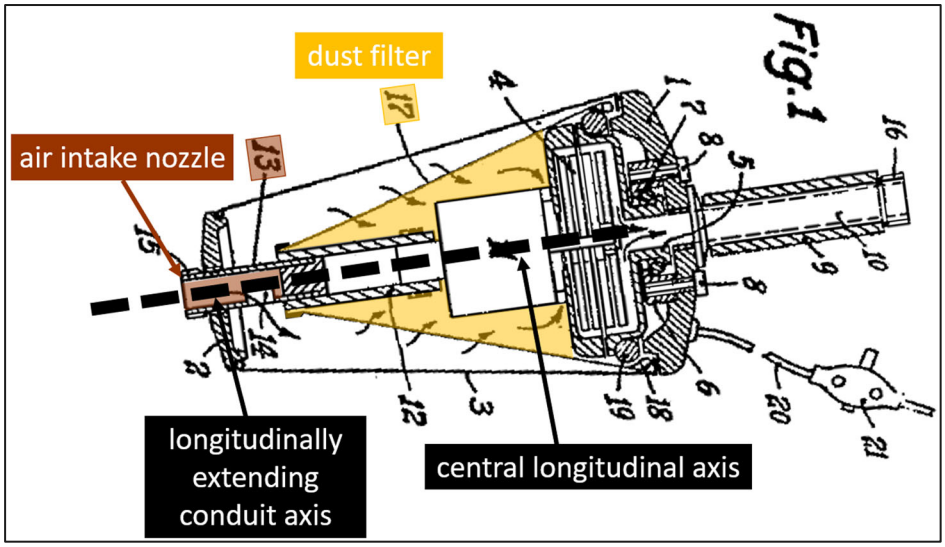


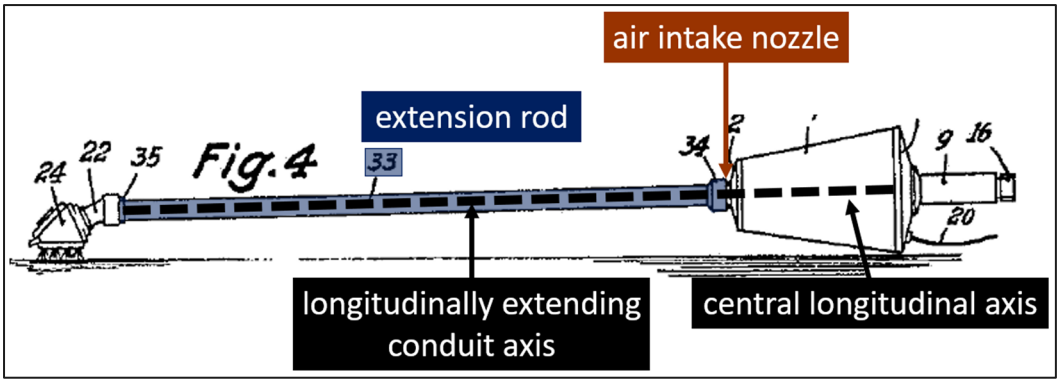


Ex1007, Figs. 1, 4; Ex1002 ¶279.

Regarding Limitation [9c.iv.1], a POSA would understand that Peter's air treatment member central longitudinal axis is a central longitudinal axis of the air treatment member. Ex1002 ¶280.

**l. [1c.iv.2]/[9c.iv.2]**

Peter teaches these limitations. Ex1002 ¶¶281-282.

Peter teaches a handle with a hand grip portion. *See* Ground 3, Limitations [1c.i]/[9c.i]. Peter's hand grip portion has what a POSA would understand is a hand grip portion axis that intersects Peter's suction motor:

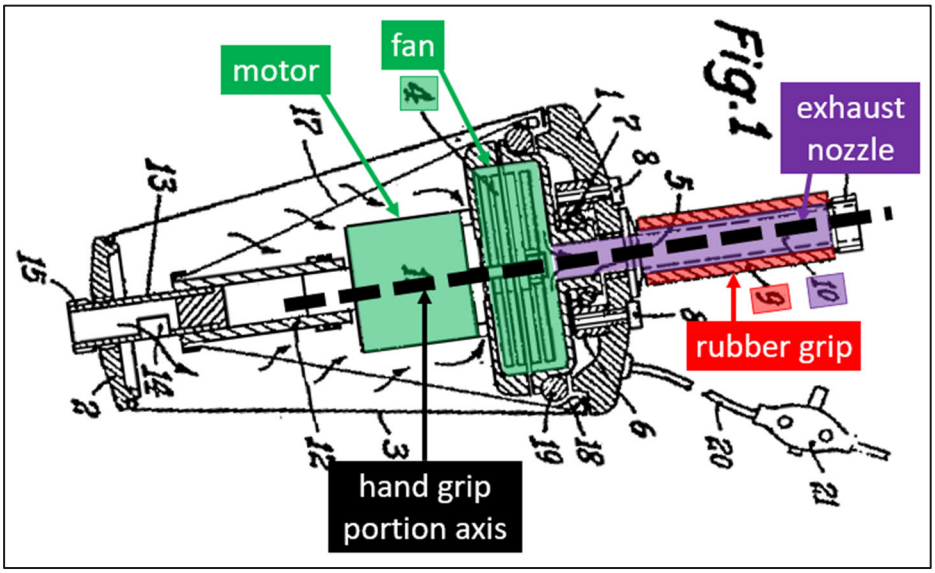


Ex1007, 2, Fig. 1; Ex1002 ¶282.

**3. [2]/[10]**

Peter in combination with Neroni renders claims 1 and 9 obvious and teaches the remaining limitations of these claims. Ex1002 ¶¶283-289.

Peter's handle with a hand grip portion extends linearly outwardly from a sidewall of the main body: Peter's "**exhaust nozzle 10**" with "**rubber grip 9**" is "inserted into the **housing cover 1**":

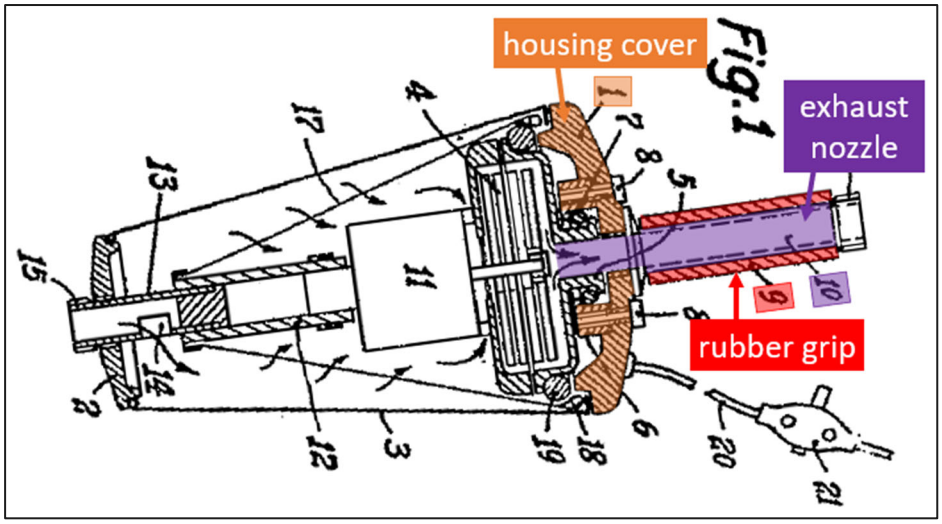


Ex1007, 2, Fig. 1; Ex1002 ¶¶283-285. A POSA would understand that "**housing cover 1**" is a sidewall of the main body from which "**rubber grip 9**" extends. Ex1002 ¶¶285-286.

Alternatively, a POSA would have been motivated to modify Peter's handle and hand grip portion by relocating it, extending it, (or by placing a second handle) on the top side of Peter's main body. Ex1002 ¶287. This would further Peter's purpose of providing "easy" and "effortless[]" cleaning "under tables, chairs," and "[p]articularly hard-to-reach areas," because a user would not need to bend down as far, and would be especially beneficial for users with less flexibility or mobility. Ex1007, 2; Ex1002 ¶287. Further, **handles** with hand grip portions extending from the top of the vacuum main body have existed for over a century:

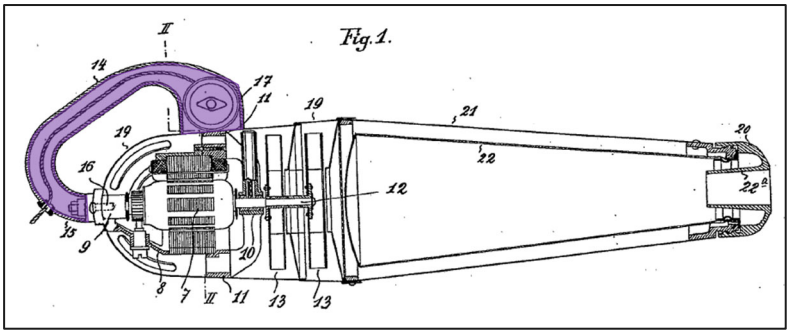


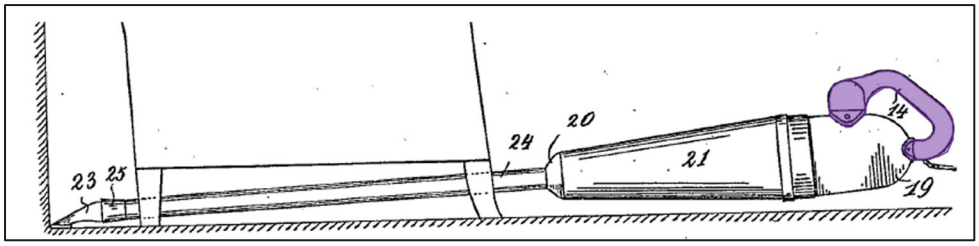


Ex1010, Figs. 1, 6. Ex1002 ¶288.

Modifying Peter's handle and hand grip portion would have involved adding or substituting one known feature (a handle with a hand grip portion extending from the top of the housing and into the back) for another to achieve the predictable result of ergonomic handling. Ex1002 ¶289. Because there were only a finite number of possible handle positions, it would have at least been obvious to try. Ex1002 ¶289. A POSA would have a reasonable expectation of success implementing such a handle because it would involve a simple addition of a handle or a simple substitution of one handle for another, and as shown above, provides the benefit of ergonomic cleaning in low areas, such as below furniture. Ex1002 ¶289.

**4. [3]**

Peter in combination with Neroni renders claim 1 obvious and teaches the remaining limitations of this claim. Ex1002 ¶¶290-294.

Peter teaches that the rigid air flow conduit is removably mounted to the surface cleaning head: Peter's "**extension rod 33**" has a "**connecting thread 35**" that connects to "**pipe angle 22** … connection sleeve 23":

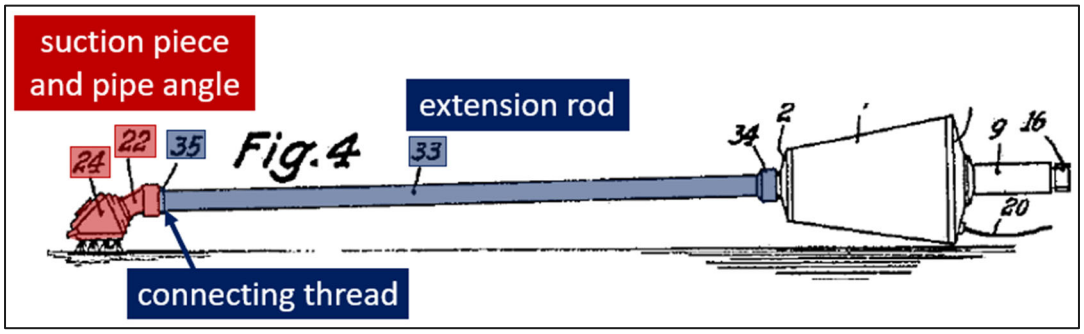


Ex1007, 2, Fig. 4; Ex1002 ¶292. When desired, "[t]he extension rod 33 can be omitted":

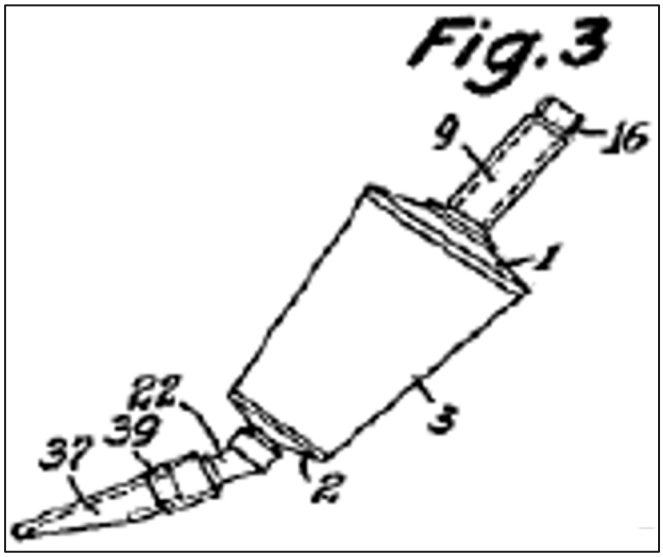


Ex1007, 3, Fig. 3. A POSA would understand that Peter's "**extension rod 33**" is removably mounted to the surface cleaning head. Ex1002 ¶293.

**5. [4]/[11]**

Peter in combination with Neroni renders claims 1 and 9 obvious and teaches the remaining limitations of these claims. Ex1002 ¶¶295-297.

Peter teaches the central longitudinal axis intersects the hand grip portion:

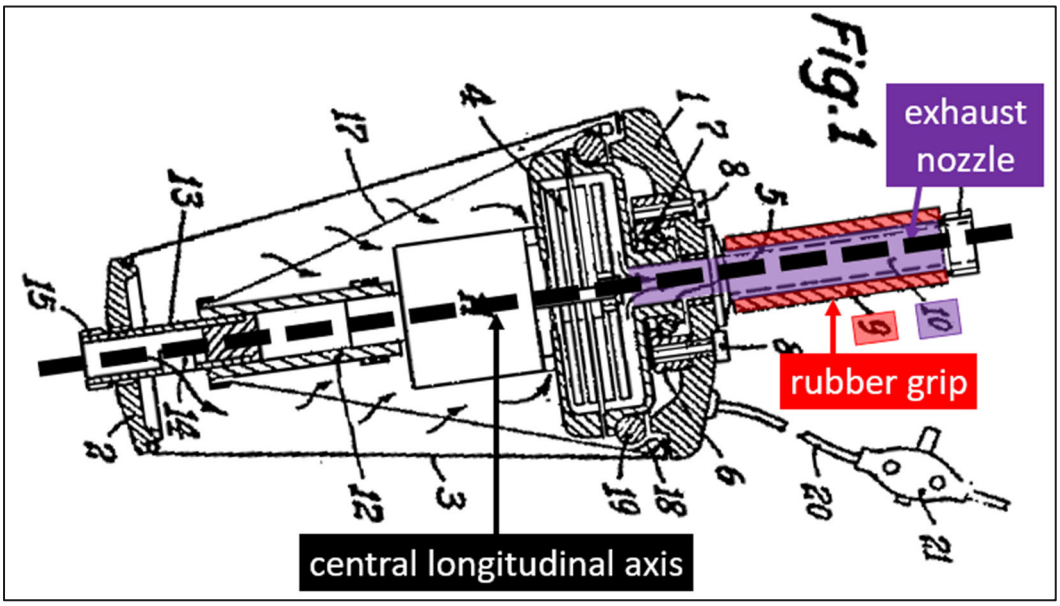


Ex1007, Fig. 1; Ex1002 ¶297.

**6. [5]/[12]**

Peter in combination with Neroni renders claims 1 and 9 obvious. Ex1002 ¶¶298-305. Peter teaches and renders obvious the remaining limitations of these claims. Ex1002 ¶¶298-305.

A POSA would understand that Peter's "**motor 11**" with a "**fan**," and "**exhaust nozzle 10**" with a "**rubber grip 9**" are positioned rearward of "**dust filter [17]**" and the cyclonic airflow created by "**lateral outlet opening 14**":

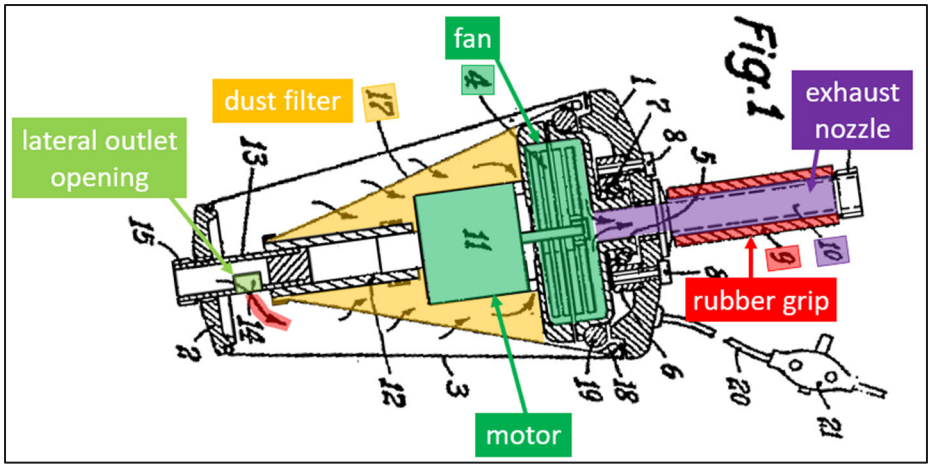


Ex1007, Fig. 1; Ex1002 ¶300.

Alternatively, a POSA would have been motivated to modify Peter's suction motor by relocating it further rearward of Peter's air treatment member. Ex1002 ¶301. This would further Peter's purpose of providing "easy" and "effortless[]" cleaning and would reduce user wrist strain because the vacuum's center of gravity would be moved closer to Peter's handle. Ex1007, 2; Ex1002 ¶301. Further, hand vacuum cleaners with the **suction motor** positioned rearward of the **air treatment member** have existed for over a century:

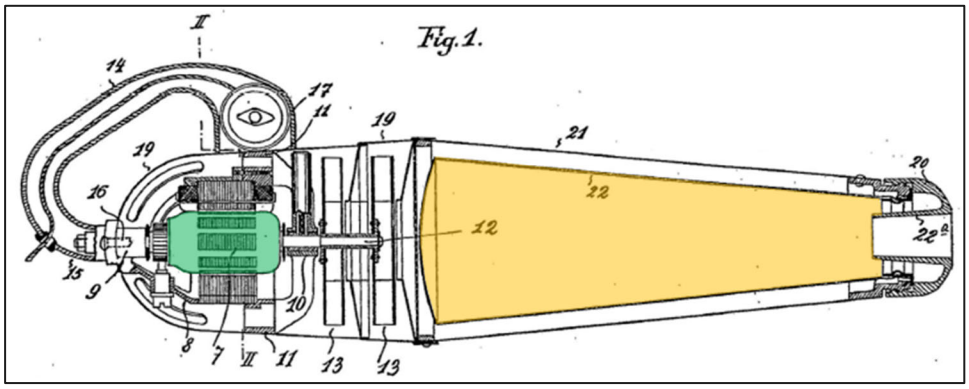


Ex1010, Fig. 1; Ex1002 ¶¶301-302.

Modifying Peter's suction motor would have involved moving it from one known location to another to achieve the predictable result of ergonomic handling. Ex1002 ¶303. Because there were only a finite number of possible suction motor locations, it would have at least been obvious to try. Ex1002 ¶303. A POSA would have a reasonable expectation of success modifying Peter's motor because it would involve the simple relocation of the motor to a further rearward position. Ex1002 ¶304. When so modified, Peter renders obvious the suction motor and the handle are positioned rearward of the air treatment member. Ex1002 ¶305.

**7. [6]**

Peter in combination with Neroni renders claim 1 obvious and teaches the remaining limitations of this claim. Ex1002 ¶¶306-308.

Peter teaches the central longitudinal axis extends through the hand vacuum cleaner air inlet:

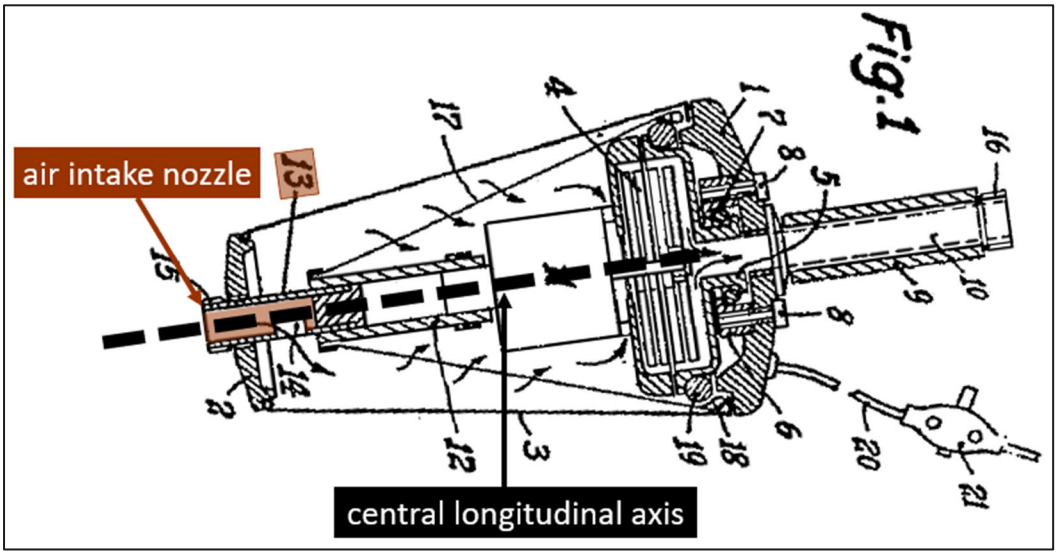

Ex1007, Fig. 1; Ex1002 ¶308.

**8. [7]**

Peter in combination with Neroni renders claim 1 obvious and teaches the remaining limitations of this claim. Ex1002 ¶¶309-311.

Peter teaches that, when the hand vacuum cleaner is mounted to the rigid wand outlet end, the longitudinally extending conduit axis extends in the same direction as the central longitudinal axis of the air treatment member:

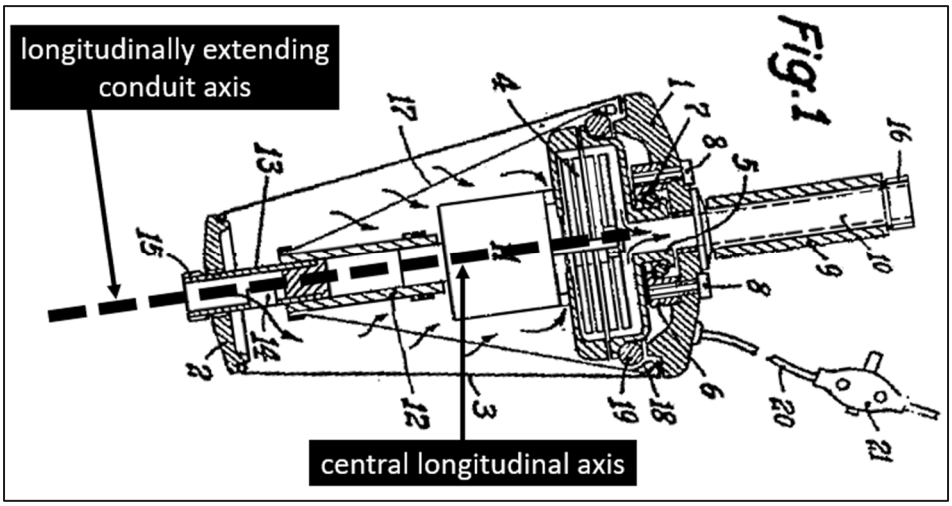


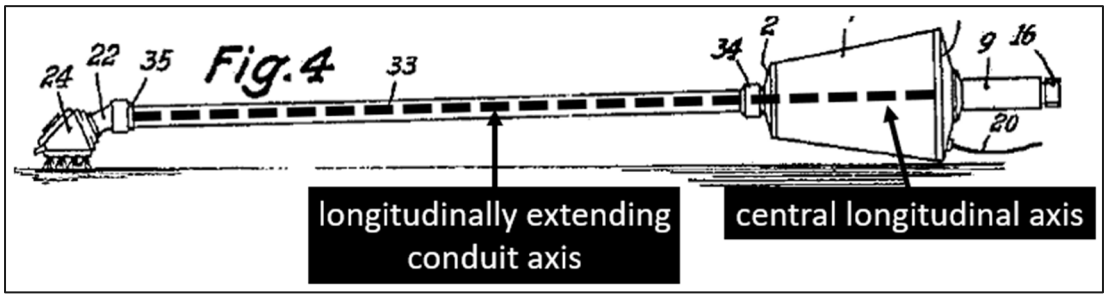


Ex1007, Figs. 1, 4; Ex1002 ¶311.

**9. [8]/[13]**

Peter in combination with Neroni renders claim 1 and the remaining limitations of these claims obvious. Ex1002 ¶¶312-317.

Peter teaches that the air treatment member has a front face. Ex1002 ¶¶312-313. As explained for Limitation [1c.ii], Peter's "**dust filter [17]**" positioned within "casing 3" has a "**housing cover 2**," which a POSA would understand is a front wall of the air treatment chamber:

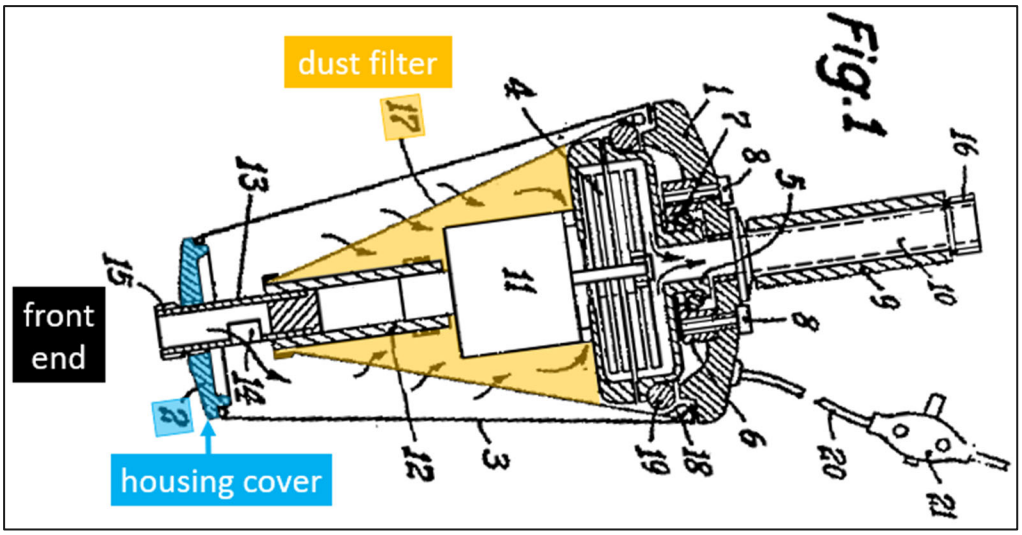


Ex1007, 2, Fig. 1; Ex1002 ¶314. A POSA would further understand that the front face of Peter's air treatment chamber front wall is the air treatment member front face, at least because it is the frontmost, most upstream surface of Peter's "casing 3" comprising a "**dust filter [17]**." Ex1002 ¶315.

As explained for Limitations [1c.iv]/[9c.iv], Peter in combination with Neroni renders obvious a hand vacuum cleaner electrical connector provided on the front end of the air treatment member. *See* Ground 3, Limitations [1c.iv]/[9c.iv]. For the

same reasons, a POSA would understand that in the combined teachings of Peter and Neroni, the hand vacuum cleaner electrical connector is positioned forward of the front face:

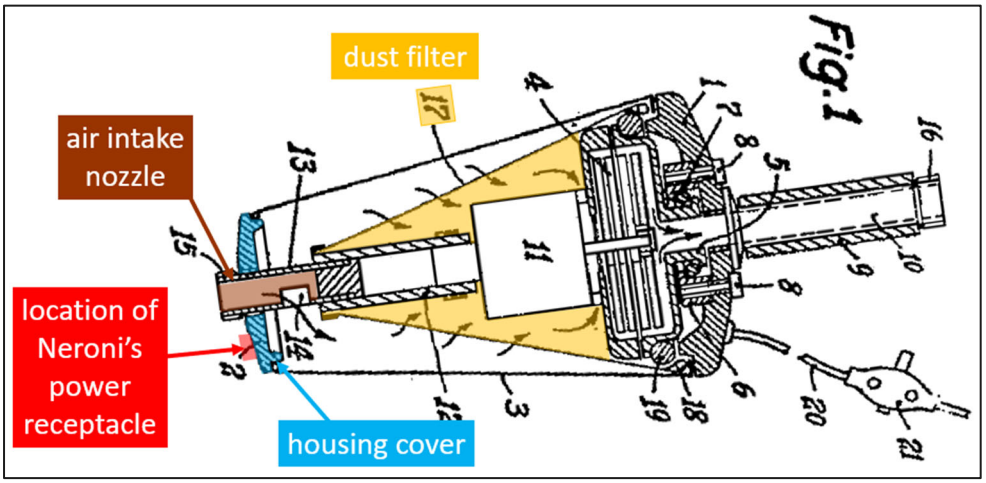


Ex1007, Fig. 1; Ex1002 ¶316.

A POSA would have been motivated to integrate Neroni's electrical connector teachings into Peter and would have had a reasonable expectation of success. *See* Ground 3, §1. For these reasons, the combined teachings meet these limitations. Ex1002 ¶317.

### D. Ground 4: Peter In Combination With Neroni and Lehmann Renders Claims 1-13 Obvious

#### 1. Lehmann Teaches A Handle That Extends Linearly Outwardly From A Sidewall Of The Main Body That A POSA Would Have Been Motivated to Incorporate Into Peter (Claims 2 and 10)

Peter in combination with Neroni renders claims 1 and 9 obvious. *See* Ground 3, Claims 1 and 9. Peter in combination with Lehmann teaches the remaining limitations of these claims. Ex1002 ¶¶318-327.

While Peter teaches a handle with a hand grip portion, "rubber grip 9," that extends linearly outwardly from a sidewall of Peter's main body, it also would have been obvious to incorporate Lehmann's linearly extending handle teachings into Peter. *See* Ground 3, Claims 2 and 10; Ex1002 ¶¶318-319.

Lehmann teaches a portable vacuum cleaner from 1922 with an **"arched handle 14**" that has an "end [17]" that "abuts radially against the **circular frame part 11**" of the vacuum cleaner main body:

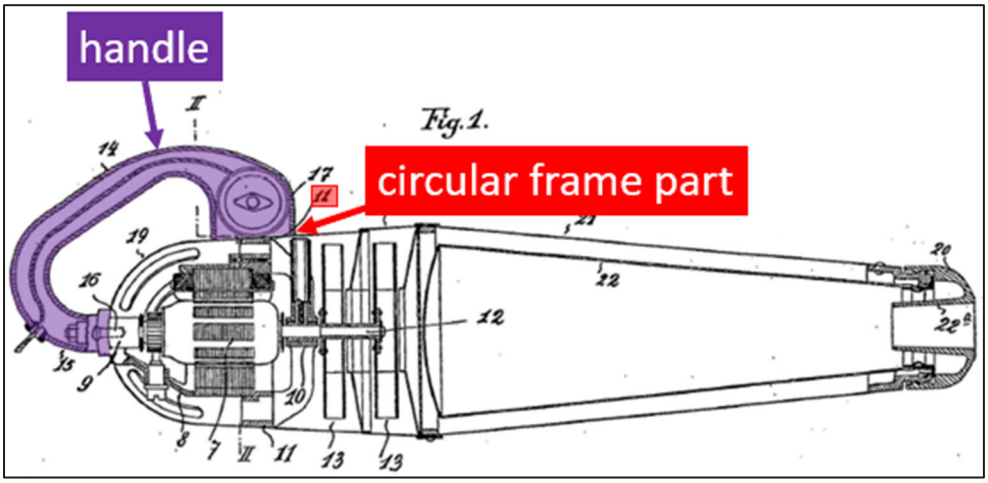

Ex1010, 1:71-78, Fig. 1; Ex1002 ¶320.

A POSA would have been motivated to modify Peter's handle having a hand grip portion, "exhaust nozzle 10" having "rubber grip 9," to have an "arched" shape as Lehmann teaches. Ex1007, 2, Figs. 1-4; Ex1010, 1:71-78, Figs. 1, 5-6; Ex1002 ¶321. Like Lehmann, Peter teaches a lightweight vacuum with a handle that "makes it easy to work under tables, chairs, and similar furniture," as well as "hard-to-reach areas of the floor or walls." Ex1007, 2; Ex1002 ¶321.

As Lehmann explains, because "the handle is near the centre of gravity the appliance can easily be manipulated with one hand, leaving the other hand free for using a brush or shifting furniture or the like." Ex1010, 2:25-29. A POSA would recognize this increased user comfort and vacuum maneuverability would have certain advantages over Peter's straight "exhaust nozzle 10" with a "rubber grip 9." Ex1002 ¶322. For example, the user would be able to grip the arched handle more loosely, which would reduce strain on the wrist, and clean under low furniture more easily, as they would not need to bend down as far. Ex1002 ¶323. A POSA would have found this to be a simple modification of the shape of a known element (Peter's straight "exhaust nozzle 10" having "rubber grip 9") into another (Lehmann's "arched handle 14" shape) to obtain the predictable result of allowing a user to manipulate Peter's vacuum cleaner comfortably in different use cases. Ex1002 ¶324. A POSA would understand that when Peter's "exhaust nozzle 10" was

modified to use this arched shape, it would still allow airflow through it, as it would remain hollow and would retain an air outlet, and it would still be "provided with a rubber grip 9" along its surface as Peter teaches. Ex1007, 2, Figs. 1-4; Ex1002 ¶325.

A POSA would have reasonably expected success because it would have simply involved substituting one handle and grip shape (Lehmann's "arched handle 14") for another (Peter's straight "exhaust nozzle 10" having "rubber grip 9," Ex1007, 2, Fig. 1). Ex1002 ¶326. Moreover, a POSA would be further motivated by Peter's teaching that its vacuum cleaner "parts," including "rubber grip 9," can be "rotated, individually exchanged and combined." Ex1007, 1-2, Ex1002 ¶326.

When so modified, Peter's arched handle "provided with a rubber grip 9" along its surface (not shown) is a handle with a hand grip portion that extends linearly outwardly from a sidewall of the main body:

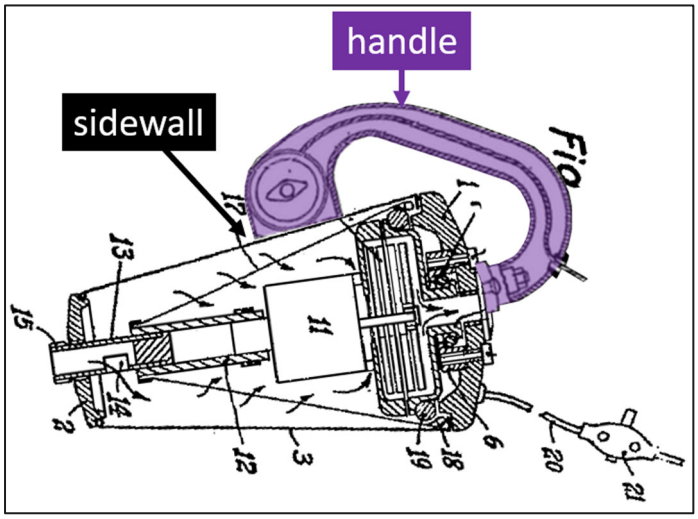

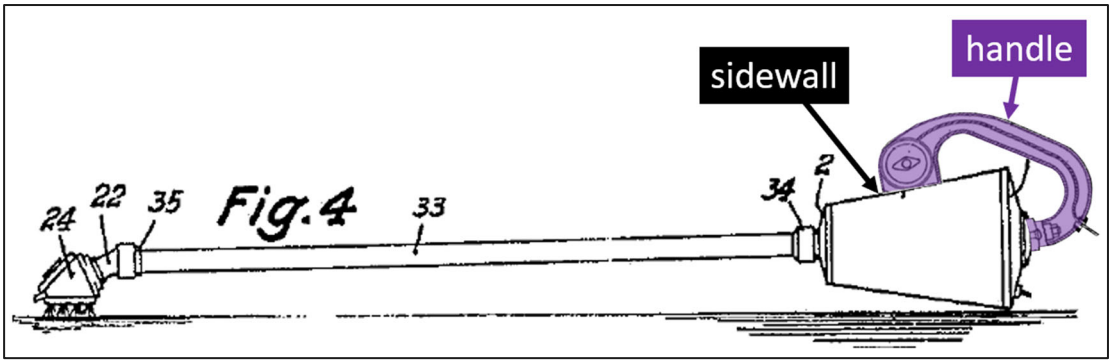


Ex1007, Figs. 1, 4; Ex1010, Fig. 1; Ex1002 ¶327.

### 2. Lehmann Teaches The Suction Motor Is Positioned Rearward Of The Air Treatment Member That A POSA Would Have Been Motivated To Incorporate Into Peter (Claims 5 and 12)

Peter in combination with Neroni renders claims 1 and 9 obvious. *See* Ground 3, Claims 1 and 9. Peter in combination with Lehmann teaches the remaining limitations of these claims. Ex1002 ¶¶328-335.

Lehmann teaches the suction motor and the handle are positioned rearward of the air treatment member: Lehmann's "**electromotor 7**" and "**arched handle 14**" are positioned rearward of Lehmann's "**dust bag 22**":

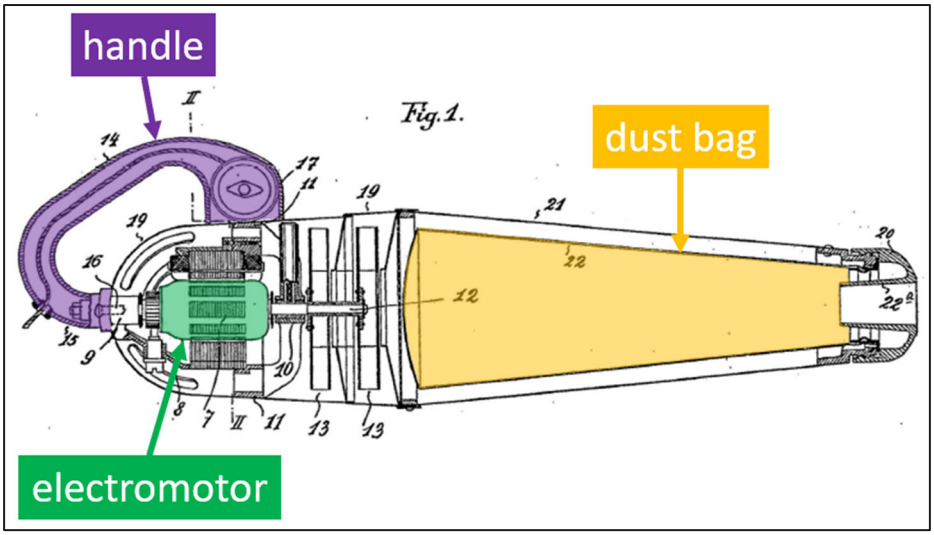


Ex1010, 1:63-67, 1:71-82, Fig. 1; Ex1002 ¶330.

A POSA would have been motivated to combine Peter and Lehmann's teachings such that Peter's "motor 11" is positioned rearward of Peter's "dust filter [17]," as Lehmann teaches. Ex1007, 2, Fig. 1; Ex1010, 1:63-91, Fig. 1; Ex1002 ¶331. In addition to the similarities noted above, *see* Ground 4, §1, Peter, like Lehmann, teaches vacuum components that are aligned along a central axis: "air intake nozzle 13," a conically shaped housing with a "dust bag or dust filter" that separates dust from air, and a "fan" and "motor 11." Ex1007, 2, Fig. 1; Ex1002 ¶332.

As Lehmann explains, locating the "electromotor 7" rearward of the "dust bag 22" and under the "arched handle 14" results in "a considerable saving of weight … and the centre of gravity is near the rear end, which is of considerable advantage in manipulating the appliance." Ex1010, 1:63-91; Ex1002 ¶333. A POSA would have

recognized the ergonomic advantages of this motor location compared to the location of Peter's "motor 11," including those described above. *See* Ground 4, §1; Ex1007, 2, Fig. 1; Ex1002 ¶333.

A POSA would have reasonably expected success in implementing Lehmann's teachings because it would have simply involved moving Peter's suction motor from one well known location to another. Ex1002 ¶334. Moreover, a POSA would be further motivated by Peter's teaching that its vacuum cleaner "parts," including "motor 11," can be "rotated, individually exchanged and combined." Ex1007, 1-2, Ex1002 ¶334. In the combined teachings of Peter and Lehmann, the suction motor and the handle are positioned rearward of the air treatment member. Ex1002 ¶335.

## IX. DISCRETIONARY FACTORS FAVOR INSTITUTION

### A. §314(a)

*Fintiv* should not be followed because it exceeds the Director's authority, is arbitrary and capricious, was adopted without notice-and-comment rulemaking, violates the APA and AIA, and because "the PTAB will not rely on the *Fintiv* factors to discretionarily deny institution in view of parallel district court litigation where a petition presents compelling evidence of unpatentability," and this petition presents such compelling evidence. USPTO Interim Procedure For Discretionary Denials In

AIA Post-Grant Proceedings With Parallel District Court Litigation, June 21, 2022, 2, 4-5 (the "Guidance").

Nevertheless, *Fintiv* favors institution because each factor favors or is neutral for institution. *Apple Inc. v. Fintiv, Inc.*, IPR2020-00019, Paper 11.

Factor 1 is neutral: there is no evidence that the court will or will not grant a stay if IPR is instituted, and because no such stay motion has yet been filed, this factor is neutral. *See, e.g., TSMC Ltd. v. Alidouble, Inc.,* IPR2023-00372, Paper 7 at 10 (PTAB July 13, 2023).

Factor 2 favor institution: while the scheduled Litigation trial date is July 21, 2025—approximately 15 months away—any comparison of a projected FWD date against the scheduled trial date is speculative. *See Dish Network v. Broadband iTV*, IPR2020-01280, Paper 17 at 16 (PTAB Feb. 4, 2021) ("We cannot ignore the fact that the currently scheduled trial date is more than nine months away and much can change during this time"); Guidance at 8 ("Stakeholders correctly noted that scheduled trial dates are unreliable and often change[,]" and a "scheduled trial date … is not by itself a good indicator of [when] the district court trial will occur."). Instead, "when considering the proximity of the district court's trial date to the date when the PTAB final written decision will be due, the PTAB will consider the median time from filing to disposition of the civil trial for the district in which the parallel litigation resides." *Id.* at 3. The median time to trial in the District of

Massachusetts is 34.6 months according to Federal Court Management Statistics (December 31, 2023). Ex1011. The district court litigation was filed on August 15, 2023, when the ’030 Patent was added to an Amended Complaint in Case No. 23-cv-11277, and which indicates an expected trial date of approximately July 1, 2026, approximately eight months after a FWD. Because the expected trial date is after the FWD deadline, this factor weighs in favor of institution. *Samsung Electronics Co., Ltd. et al v. Staton Techiya, LLC*, IPR2022-00302, Paper 13 at 10-12.

Factor 3 favors institution. “If, at the time of the institution decision, the district court has not issued orders related to the patent at issue in the petition, this fact weighs against exercising discretion to deny institution … .” *Apple Inc., v. Fintiv, Inc.*, IPR2020-00019, Paper 11 at 10 (PTAB Mar. 20, 2020) (precedential). No such substantive orders have issued with respect to the ’030 Patent, and none are expected prior to institution. A *Markman* hearing is scheduled for July 16, 2024, and a *Markman* order is not expected until several months after the hearing. *E.g.*, *iRobot Corp. v. SharkNinja Operating LLC et al.*, 19-cv-12125 (D. Mass.) (holding a *Markman* hearing on August 6, 2020 and issuing a *Markman* order on January 14, 2021). Further, the parties’ investments in co-pending litigation have been low and will remain low at the time of institution. In the co-pending litigation, PO added the ’030 Patent to an Amended Complaint on August 15, 2023 in Case No. 23-cv-11277, which the Court severed on October 13, 2023 as Case No. 23-cv-12372. On

October 10, 2023, Dyson filed a motion to dismiss, which remains pending, and Dyson has not yet filed an Answer to the Complaint. Litigation, Dkt. 76. Fact discovery began on October 10, 2023 and no depositions have been taken. Litigation, Dkts. 103–04. PO served its infringement contentions on December 15, 2023, and Petitioners filed this petition within four and a half months of those contentions. Ex1012.

Factor 4 favors institution because there is little overlap between the two proceedings. This Petition challenges 8 claims not at-issue in the Litigation, *see* Ex1013 at 2; and Petitioners stipulate that, unless the Board denies or later vacates institution of this Petition, Petitioners will not seek resolution of invalidity in the co-pending litigation based on the specific grounds asserted in this Petition. Ex1014.

Factor 5 favors institution because although Petitioners and PO are also parties to the parallel litigations, the expected timing of the trial date favors institution. *Fusion Orthopedics, LLC v. Extremity Medical, LLC*, IPR2023-00894, Paper 15 at 32 (PTAB Nov. 17, 2023).

The *General Plastics* factors favor institution because this is the only petition against the ’030 Patent. *General Plastics Indus. Co., Ltd. v. Canon Kabushiki Kaisha*, IPR2016-01357, Paper 19 at 9-10.

### B. §325(d)

The §325(d) factors favor institution. The relied-upon references were not previously before the Office, nor are they cumulative. *Advanced Bionics, LLC v. MED-EL Elektromedizinische Geräte GmbH*, IPR2019-01469, Paper 6 at 9-11 (PTAB Feb. 13, 2020) (precedential).

## X. SECONDARY CONSIDERATIONS

Petitioners are unaware of any secondary considerations of non-obviousness.

## XI. MANDATORY NOTICES UNDER 37 C.F.R. §42.8

### A. Real Parties-in-Interest

Petitioners identify themselves as the real parties-in-interest.

### B. Related Matters

To the best of Petitioners' knowledge, apart from the above-mentioned litigation, *SharkNinja Operating LLC v. Dyson, Inc.*, No. 1:23-cv-12372 (D. Mass.), the '030 Patent has not been involved in any litigation, *inter partes* or post-grant review prior to this proceeding.

### C. Lead and Backup Counsel, Service, and Power of Attorney

| Lead Counsel | Back-Up Counsel |
|---|---|
| Christian Huehns<br>Reg. No. 77,717<br>christian.huehns@kirkland.com<br>Postal and Hand-Delivery Address:<br>KIRKLAND & ELLIS LLP<br>300 North LaSalle<br>Chicago, IL 60654<br>Telephone: (312) 862-2000 | Matthew Benjamin Hershkowitz<br>Reg. No. 77,881<br>matt.hershkowitz@kirkland.com<br>Postal and Hand-Delivery Address<br>KIRKLAND & ELLIS LLP<br>601 Lexington Ave<br>New York, NY 10022<br>Telephone: (212) 446-4800 |

| Lead Counsel | Back-Up Counsel |
|---|---|
| Facsimile: (312) 862-2200 | Facsimile: (212) 446-4900<br><br>Jay Emerick (*pro hac vice* forthcoming)<br>jay.emerick@kirkland.com<br>Postal and Hand-Delivery Address:<br>KIRKLAND & ELLIS LLP<br>300 North LaSalle<br>Chicago, IL 60654<br>Telephone: (312) 862-2000<br>Facsimile: (312) 862-2200<br><br>Bryan S. Hales, P.C. (*pro hac vice* forthcoming)<br>bhales@kirkland.com<br>Postal and Hand-Delivery Address:<br>KIRKLAND & ELLIS LLP<br>300 North LaSalle<br>Chicago, IL 60654<br>Telephone: (312) 862-2000<br>Facsimile: (312) 862-2200 |

Petitioners concurrently submit a Power of Attorney, 37 C.F.R. § 42.10(b), and consent to electronic service at DysonIPR@kirkland.com.

## XII. PAYMENT OF FEES UNDER 37 C.F.R. §42.103

Petitioners concurrently electronically submit the required fees for this Petition. The Board is authorized to charge Deposit Account No. 506092 for any fee deficiency.

Date: April 26, 2024

Respectfully submitted,

*/s/ Christian Huehns*

Christian Huehns (Reg. No. 77,717)
Bryan S. Hales, P.C. (*pro hac vice* forthcoming)
Jay Emerick (*pro hac vice* forthcoming)
KIRKLAND & ELLIS LLP
300 N. LaSalle
Chicago, IL 60654
Telephone: (312) 862-2000
Facsimile: (312) 862-2200
christian.huehns@kirkland.com
bhasles@kirkland.com
jay.emerick@kirkland.com
DysonIPR@kirkland.com

Matthew B. Hershkowitz (Reg. No. 77,881)
KIRKLAND & ELLIS LLP
601 Lexington Ave.
New York, NY 10022
Telephone: (212) 446-4800
Facsimile: (212) 446-4900

*Attorneys for Petitioners*

## CERTIFICATE OF COMPLIANCE

This Petition complies with the type-volume limitations as mandated in 37 C.F.R. § 42.24, totaling 12,440 words. Counsel has relied upon the word count feature provided by Microsoft Word.

*/s/Christian Huehns*

## CERTIFICATE OF SERVICE

Pursuant to 37 C.F.R. §§ 42.6(e)(4)(i) *et seq.* and 42.105(b), the undersigned certifies that a copy of the foregoing document with the accompanying Exhibits listed in Petitioner's Exhibit List was caused to be served by Federal Express, costs prepaid, to Patent Owner at the following address of record:

1059 – Bereskin & Parr LLP / S.E.N.C.R.L., srl.
40 King Street West
40th Floor
Toronto, ON
Canada

A copy was also served via electronic mail and FTP on the attorneys of record in the following related matter, SharkNinja Operating LLC et al. v. Dyson, Inc. et al., 1:23-cv-12372-ADB (D. Mass.):

GIBSON, DUNN & CRUTCHER LLP
SharkNinja-Dyson@gibsondunn.com
Brian A. Rosenthal
Benjamin Hershkowitz
Vivian Lu
Brian Buroker
Wendy W. Cai

WILMER CUTLER PICKERING HALE AND DORR LLP
WHSharkNinja-DysonService@wilmerhale.com
Joseph J. Mueller
Todd C. Zubler
Omar A. Khan
Jeffrey A. Dennhardt

*/s/ Sheryl A. Brongiel*
Sheryl A. Brongiel