US006949389B2

(12) **United States Patent**
Pichler et al.

(10) **Patent No.: US 6,949,389 B2**
(45) **Date of Patent: Sep. 27, 2005**

(54) **ENCAPSULATION FOR ORGANIC LIGHT EMITTING DIODES DEVICES**

(75) Inventors: **Karl Pichler**, Santa Clara, CA (US); **Kyle D. Firschknecht**, Livermore, CA (US)

(73) Assignee: **Osram Opto Semiconductors GmbH**, Regensburg (DE)

(*) Notice: Subject to any disclaimer, the term of this patent is extended or adjusted under 35 U.S.C. 154(b) by 0 days.

(21) Appl. No.: **10/137,163**

(22) Filed: **May 2, 2002**

(65) **Prior Publication Data**

US 2003/0205845 A1 Nov. 6, 2003

(51) **Int. Cl.**[7] **H01L 21/00**; H01L 21/425

(52) **U.S. Cl.** **438/26**; 438/28; 438/30; 438/48; 438/55; 438/531; 438/627

(58) **Field of Search** 438/26, 28, 30, 438/48, 55, 531, 624, 627, 641; 257/53, 21, 59.414, 431, 701, 760

(56) **References Cited**

U.S. PATENT DOCUMENTS

4,682,565	A	7/1987	Carrico	
5,369,151	A	* 11/1994	Fujibayashi et al.	523/414
5,703,433	A	* 12/1997	Fujii et al.	313/484
5,757,126	A	5/1998	Harvey, III et al.	
5,874,804	A	2/1999	Rogers	
5,895,228	A	4/1999	Biebuyck et al.	
6,072,227	A	* 6/2000	Yau et al.	257/642
6,102,541	A	8/2000	Kuo	
6,103,456	A	* 8/2000	Tobben et al.	430/317
6,146,715	A	* 11/2000	Kim et al.	427/555
6,148,764	A	* 11/2000	Cui et al.	118/723 ME
6,268,695	B1	7/2001	Affinito	
6,271,135	B1	* 8/2001	Palmans et al.	438/687
6,387,802	B1	* 5/2002	Marsh	438/680
6,498,114	B1	* 12/2002	Amundson et al.	438/780
6,500,604	B1	* 12/2002	Dimitrakopoulos et al.	430/322
6,522,067	B1	2/2003	Graff et al.	
6,524,937	B1	* 2/2003	Cheng et al.	438/574
6,570,325	B2	5/2003	Graff et al.	
6,590,157	B2	* 7/2003	Boroson et al.	174/52.2
6,720,203	B2	4/2004	Carcia et al.	
2001/0052752	A1	* 12/2001	Ghosh et al.	313/512
2002/0094624	A1	* 7/2002	Ahn et al.	438/200
2002/0155661	A1	* 10/2002	Massingill et al.	438/244
2003/0194493	A1	* 10/2003	Chang et al.	427/248.1

FOREIGN PATENT DOCUMENTS

DE	196 03 746	4/1997
EP	1183567 B1	5/2003
WO	WO 00/36665	6/2000
WO	01/81649 A1	11/2001
WO	02/05361 A1	1/2002

OTHER PUBLICATIONS

Hayes, Donald J. et al., "Low–cost display assembly and interconnect using ink–jet printing technology", *Journal of the SID*, 9/1, 2001, pps. 9–13.

Le, Hue P., "Porgress and Trends in ink–jet Printing Technology, Part 4", *Society for Imaging Science and Technology*, 42/1, Jan./Feb. 1998, pps. 1–9.

Wilson, J.S. et al., "Spin–dependent exciton formation in π–conjugated compounds", *Nature*, 413, Oct. 2001 pp. 828–831.

* cited by examiner

Primary Examiner—Hsien-Ming Lee
(74) *Attorney, Agent, or Firm*—Thomas George

(57) **ABSTRACT**

An embodiment of an encapsulated OLED device is described. This embodiment of the encapsulated OLED device is formed by: fabricating multiple OLED devices on a substrate; depositing at least one planarization layer on the OLED devices; hardening the at least one planarization layer in a patterned manner such that the hardened region substantially covers the OLED device; removing areas of the at least one planarization layer that are not hardened; and selectively depositing at least one barrier layer over the hardened region.

53 Claims, 8 Drawing Sheets

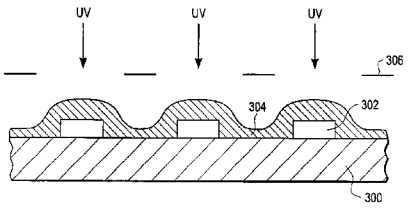

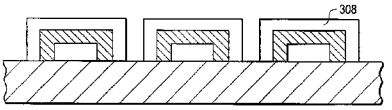

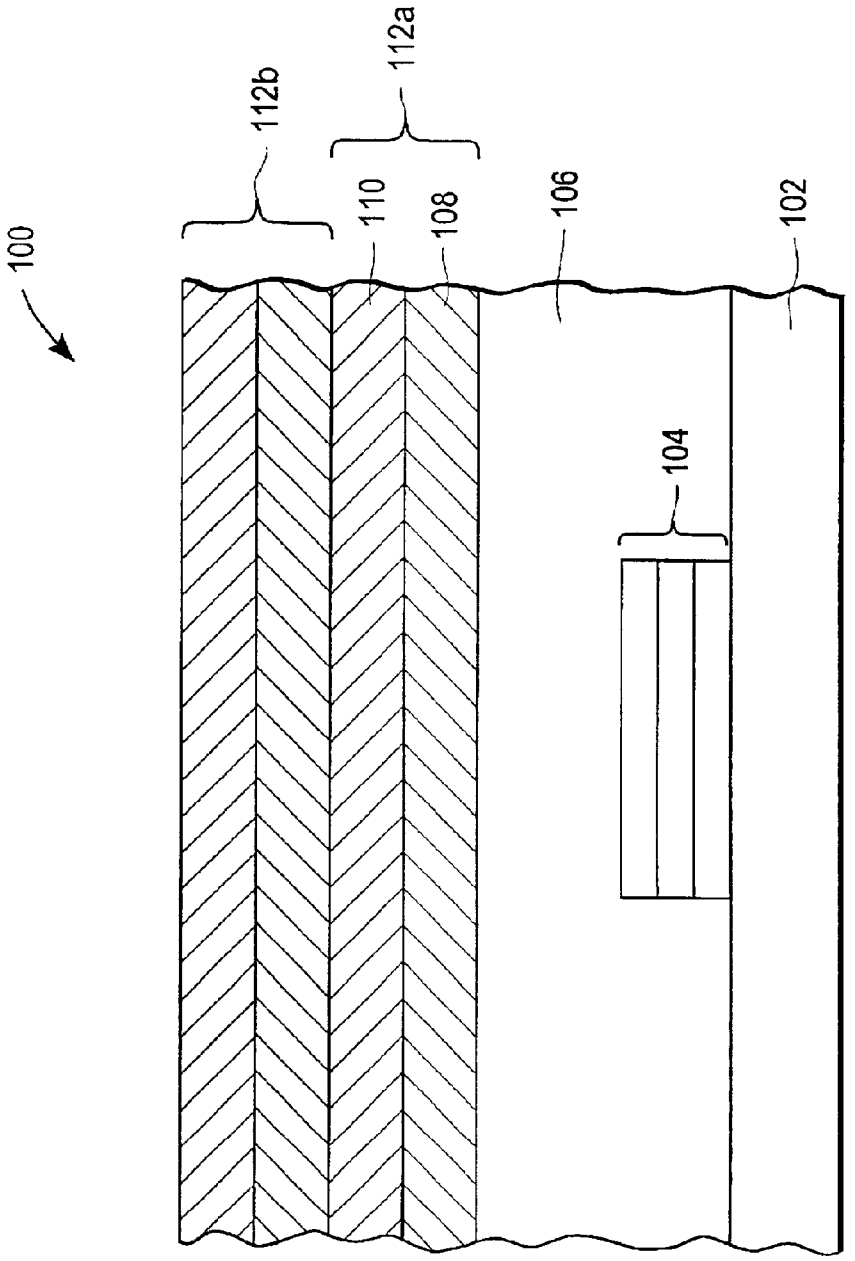

FIG. 1 (PRIOR ART)

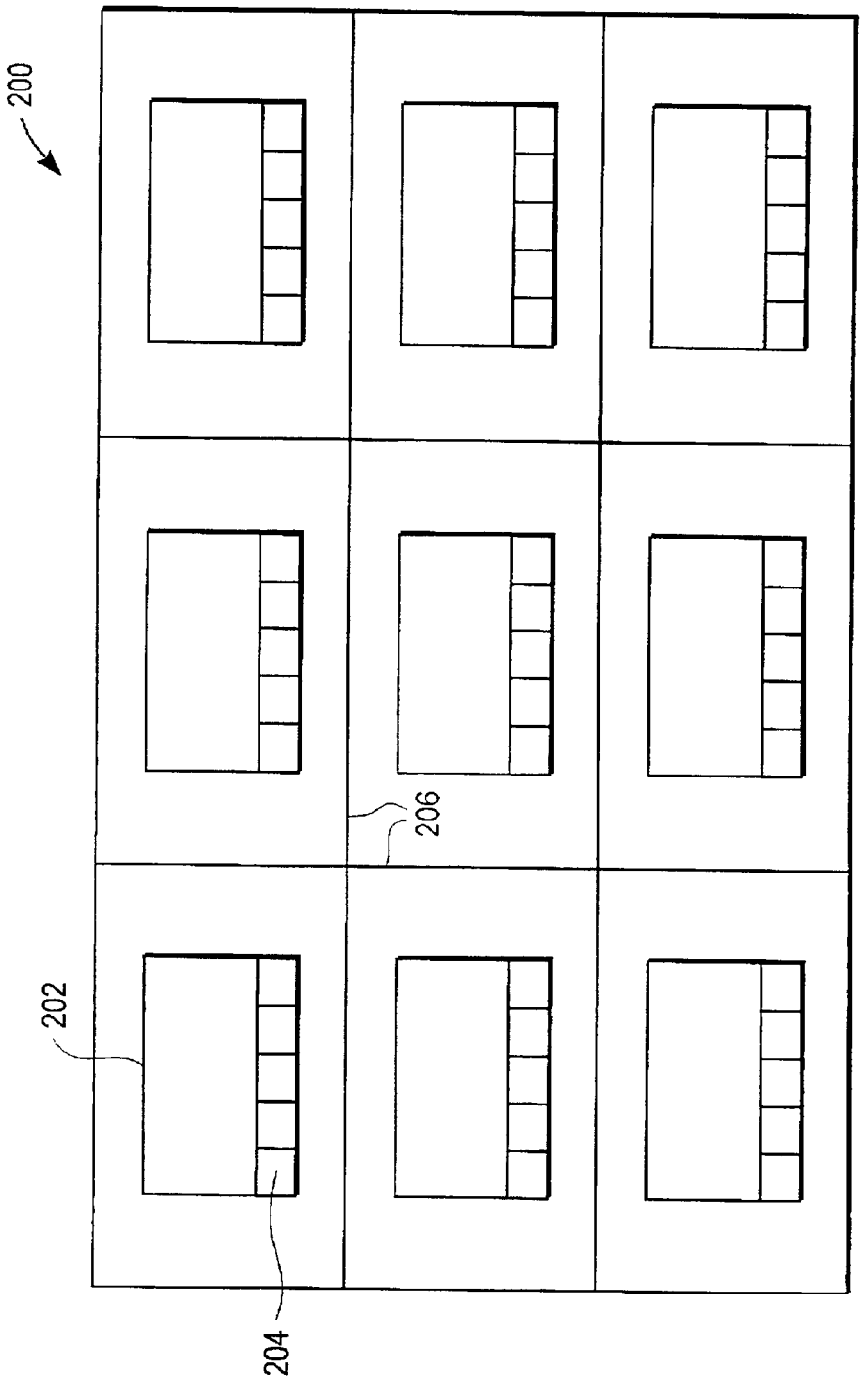

FIG. 2 (PRIOR ART)

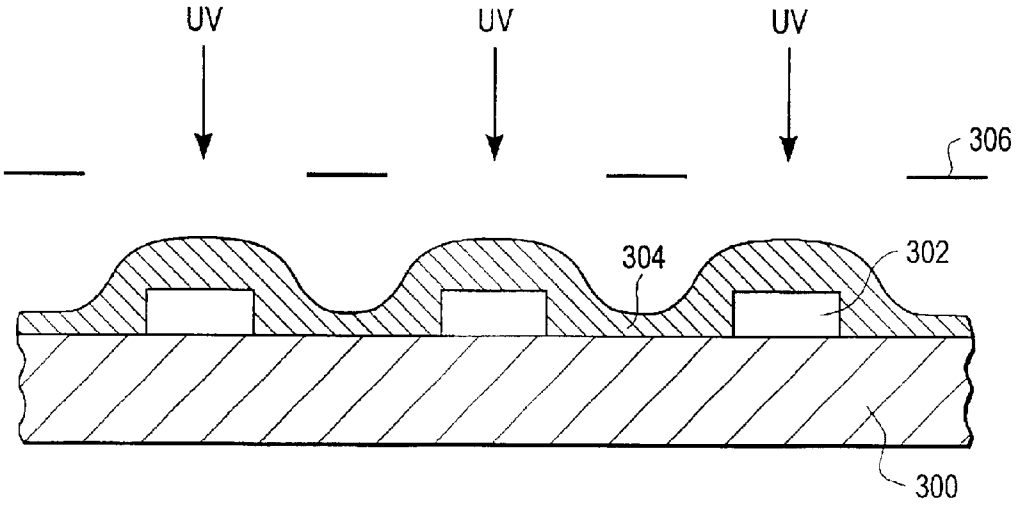

FIG. 3A

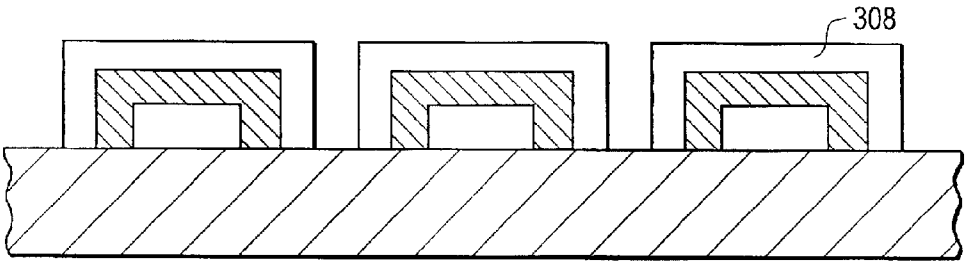

FIG. 3B

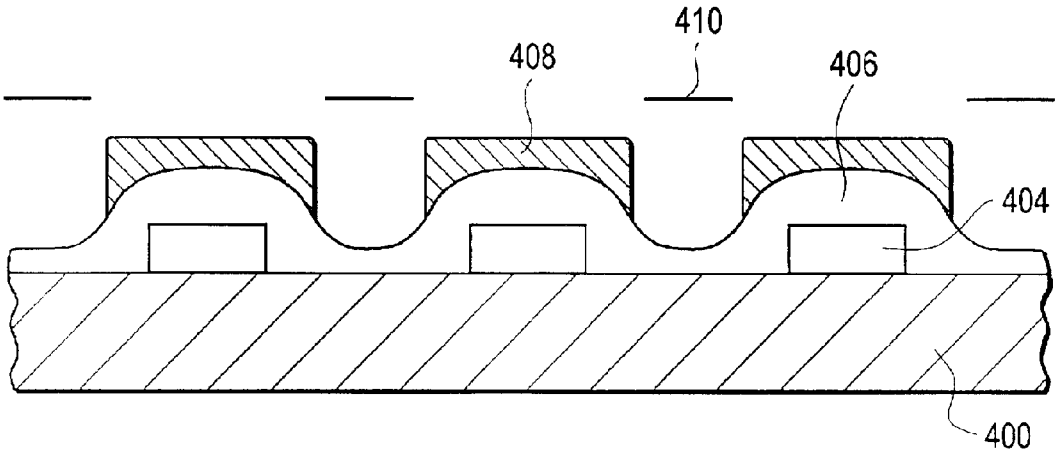

FIG. 4A

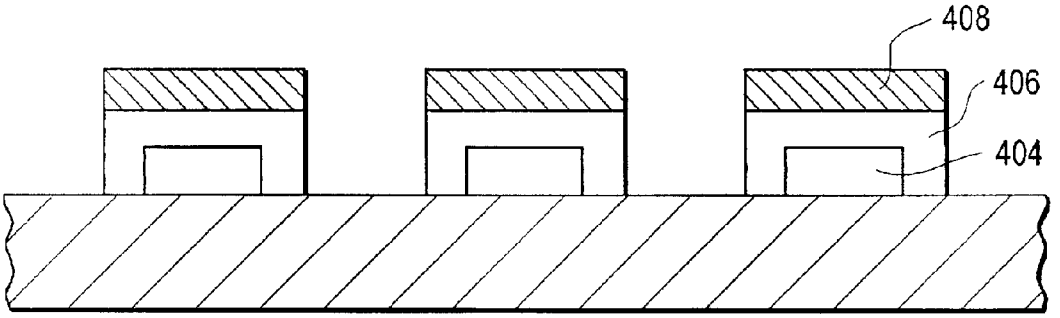

FIG. 4B

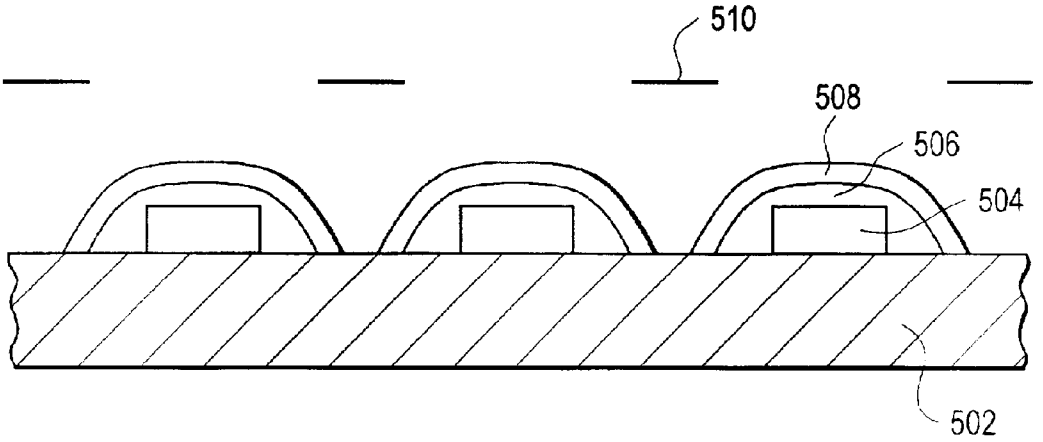

FIG. 5

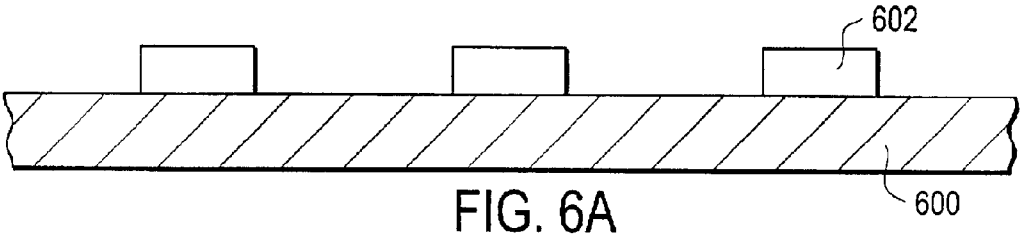

FIG. 6A

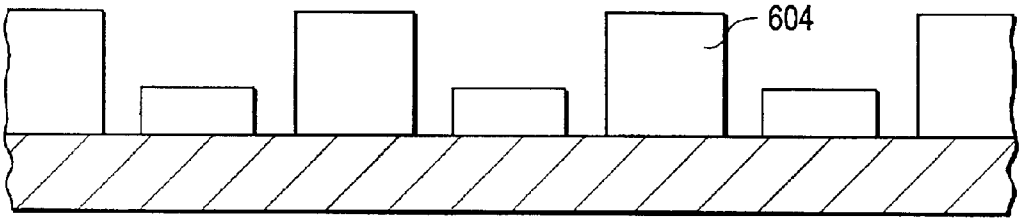

FIG. 6B

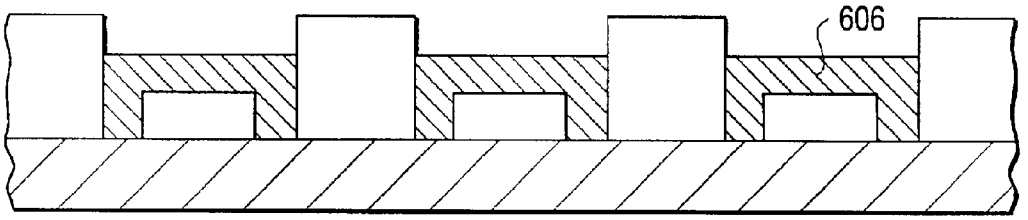

FIG. 6C

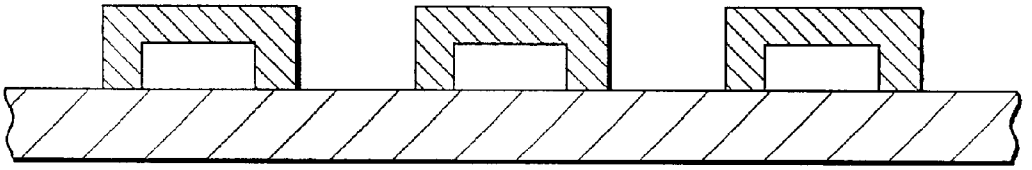

FIG. 6D

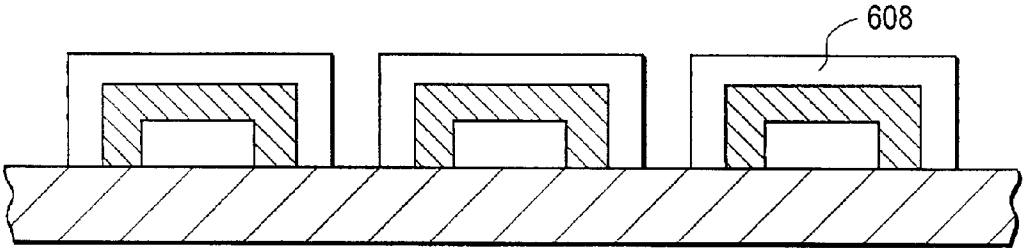

FIG. 6E

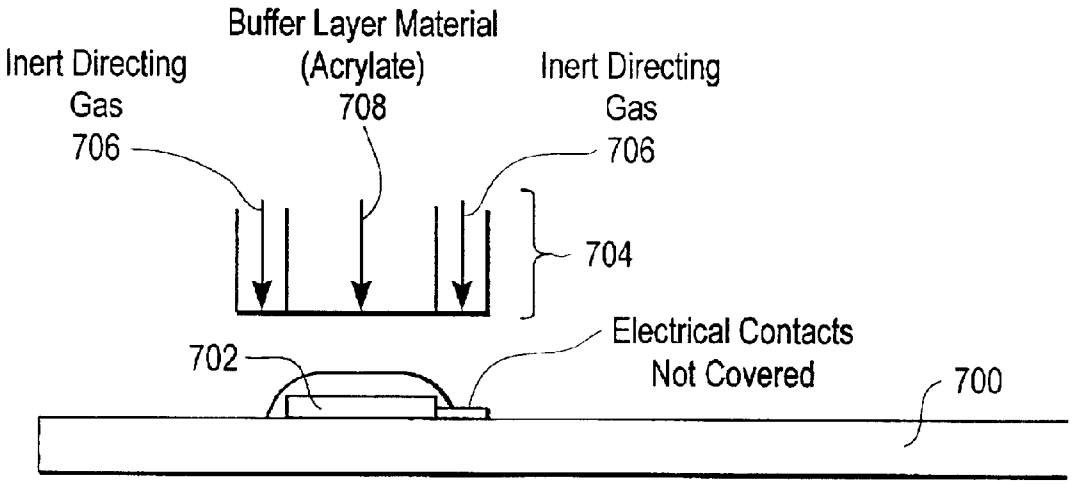
Buffer Layer Material
(Acrylate)
708
Inert Directing
Gas
706
Inert Directing
Gas
706
704
Electrical Contacts
Not Covered
702
700

FIG. 7A

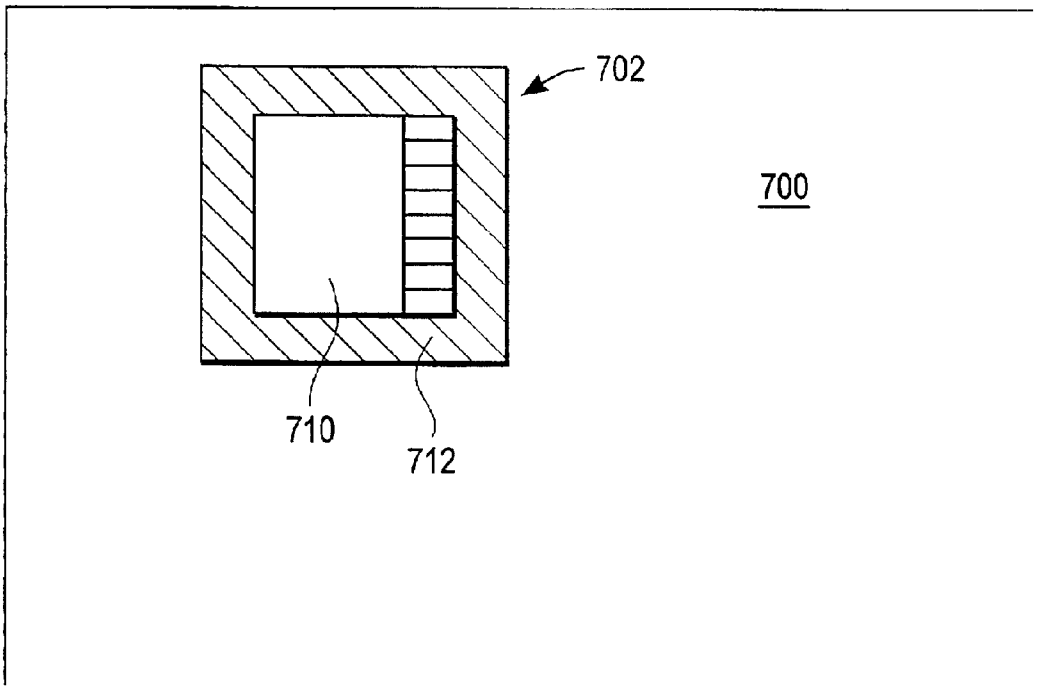
702
700
710
712

FIG. 7B

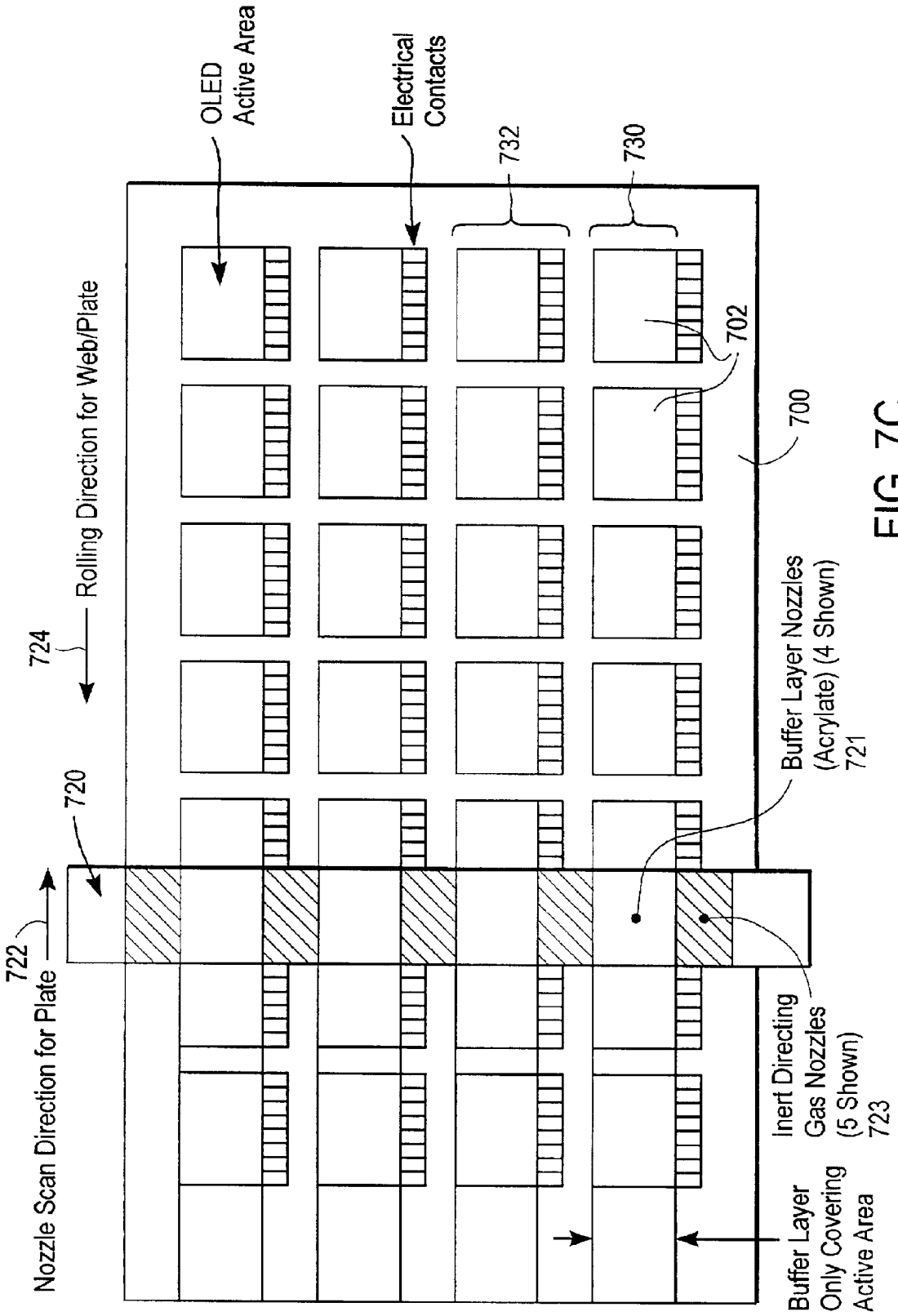
OLED Active Area
Electrical Contacts
732
730
702
700
Rolling Direction for Web/Plate
724
720
722
Nozzle Scan Direction for Plate
Buffer Layer Nozzles (Acrylate) (4 Shown) 721
Inert Directing Gas Nozzles (5 Shown) 723
Buffer Layer Only Covering Active Area

FIG. 7C

ENCAPSULATION FOR ORGANIC LIGHT EMITTING DIODES DEVICES

BACKGROUND OF THE INVENTION

One of the last manufacturing steps in the construction of an organic light emitting diode ("OLED") is encapsulation. Encapsulation is a way to protect the OLED device from the damaging environmental effects—primarily from oxygen and moisture. It is well known in the art to encapsulate an OLED device by physically mating a top glass (or other suitable material) layer over, but usually not touching, the OLED device with an epoxy border. The glass, together with its epoxy border, typically is an effective, tried-and-true way to provide the necessary environmental protection required for long-lived OLED usage.

Of late, there has been some discussion in the art to provide a cheaper and better manner of encapsulation, called "direct thin-film" encapsulation. In this manner, thin film encapsulation is typically described as a "polymer multi-layer" (PML) comprising alternating and repeating layers of an organic (usually acrylate or the like) and a barrier layer. FIG. **1** depicts a typical PML structure **100** as is currently known in the art. A glass (or other suitable material) substrate **102** provides the support structure for OLED structure **104** formed on top of substrate **102** in any manner known in the art. Layers **102** and **104** form typically the structure that requires encapsulation—either by known techniques or by the encapsulation techniques of the present invention.

Typically, for PML structures, a planarization layer **106** is formed on top of OLED structure **104**. Planarization layer **106** typically is an organic layer (e.g. acrylate or the like) and is provided to give a planar surface for the deposition of the PML structure **112***a*. PML structure **112***a* typically comprises barrier layer **108** and another planarization layer **110**.

Barrier layer **108** typically comprises a sputtered metal, metal-oxide or a dielectric layer. Barrier layer **108** provides the necessary environmental isolation from the corrosive effects of oxygen and moisture. Planarization layer **110** may again comprise an organic layer (e.g. acrylate or the like) and is typically laid down to provide a planar surface for deposition of the barrier layer **108**. This entire PML structure **112***a* may be repeated (e.g. PML structure **112***b*)—possibly several times—for additional encapsulation of the entire OLED device.

The advantages of direct thin-film encapsulation over the prior art are primarily cost reduction and improved reliability. Using direct thin-film encapsulation, the package may also be thinner and/or lighter and/or mechanically more flexible. Several structures and steps of the prior art may be excluded with this process. For example, there is no need for a separate glass plate, no need for an epoxy seal, no need for a getter (which is typical in the prior art).

One of the problems of the direct thin film encapsulation occurs with the barrier layer. The barrier layer should ideally not contain any point defects (i.e. pin holes) in its surface—otherwise its usefulness as a barrier layer is severely compromised. That is primarily the reason that a planar organic layer is typically used as a substrate upon which the barrier layer is deposited.

This problem is exacerbated during the batch fabrication of many OLED devices upon a single large sheet of glass—such as shown as a top view in FIG. **2**. Upon such a single glass sheet **200**, several tens (or even hundreds) of OLED devices **202** may be so fabricated. As depicted, OLED

devices **202** are typically laid down in rows and columns on a large sheet of glass **200**. Typically, each OLED **202** comprises an electrical contact area **204** for electrically mating the OLED device to a driver circuit.

At the thin film encapsulation step, the PML structure is deposited where at least one UV-curable organic liquid material is deposited over the entire glass sheet containing the multiple OLED devices. This organic layer is subsequently cured—followed by a deposition of a barrier layer (e.g. sputtered metal-oxide or dielectric). Such a process may be repeated to form a PML structure—primarily to avoid external particle/dirt-induced pinhole defects. After encapsulation, singulation is performed, for example by forming scribe and break lines **206** upon the entire structure so that individual OLED devices **202** may be separated and further processed.

The problem with this PML technique is that the only part of the device that requires encapsulation is the OLED structure itself—and not, e.g., the electrical contact pads. In fact, the contact pad must typically be exposed for electrical mating with external driver circuitry. So, at a minimum, additional processing must be performed for the removal of the PML structure over these areas.

Another potential problem with the current PML techniques is that by having the PML layer over the scribe and break lines and/or the glue lines the integrity of the sealed package may be deteriorated, for example by delamination of the PML layer over these areas.

Approaches other than PML are known in the prior art that use combination of organic planarizing layers together with inorganic barrier layers to achieve some degree of thin-film direct encapsulation. Organic planarization layers that do not require special cure may be used as well as layers that are electron-beam or thermally cured, in vacuum or gas atmosphere, preferably inert gas. Such organic layers may also be deposited in non-liquid form, e.g. be evaporated or plasma-deposited (e.g. Parylene).

SUMMARY OF THE INVENTION

In one embodiment, herein is described a method of encapsulating a plurality of OLED devices fabricated upon a substrate, the steps of said method comprising:

fabricating a plurality of OLED devices on a substrate;

depositing at least one planarization layer upon said OLED devices;

hardening said at least one planarization layer in a patterned manner such that the hardened region substantially covers said OLED device;

removing areas of the at least one planarization layer that are not hardened; and

selectively depositing at least one barrier layer over said hardened region.

In yet another embodiment, herein is described a method of encapsulating a plurality of OLED devices fabricated upon a substrate, the steps of said method comprising

fabricating a plurality of OLED devices on a substrate;

depositing at least one planarization layer upon said OLED devices wherein said planarization layer is deposited as an unpatterned liquid film;

selectively depositing at least one barrier layer over said planarization layer; and

removing said areas of unwanted planarization layer.

In yet another embodiment, herein is described a method of encapsulating a plurality of OLED devices fabricated upon a substrate, the steps of said method comprising:

fabricating a plurality of OLED devices on a substrate;

selectively depositing at least one planarization layer upon said OLED devices; and

selectively depositing at least one barrier layer over said planarization layer.

In yet another embodiment, herein is described a method of encapsulating a plurality of OLED devices fabricated upon a substrate, the steps of said method comprising:

fabricating a plurality of OLED devices on a substrate;

depositing a mask on top of said substrate, such that mask openings are placed on top of said OLED devices;

depositing at least one planarization layer upon said mask;

removing said mask from said substrate; and

selectively depositing at least one barrier layer over said planarization layer.

BRIEF DESCRIPTION OF THE DRAWINGS

FIG. **1** is side view of a typical PML encapsulation structure formed over an OLED device.

FIG. **2** is a top view of an array of mass-produced OLED structures upon a large glass substrate.

FIGS. **3**A and **3**B are a set of side view diagrams showing the processing steps of one embodiment of the encapsulation techniques as made in accordance with the principles of the present invention.

FIGS. **4**A and **4**B are a set of side view diagrams showing another embodiment of the present invention.

FIG. **5** is a side view of yet another embodiment of the present invention.

FIGS. **6**A through **6**E are a set of side view diagrams showing still yet another embodiment of the present invention.

FIGS. **7**A through **7**C are a set of diagrams depicting a gas nozzle deposition system made in accordance with the principles of the present invention.

DETAILED DESCRIPTION OF THE INVENTION

Turning attention to FIGS. **3**A–**3**B, there is shown a series of side views of OLED devices being encapsulated in accordance with the principles of the present invention. In FIG. **3**A, substrate **300** has formed upon its surface several OLED devices **302**. For the purposes of the present invention, this structure is to be construed very broadly. For example, substrate **300** could be comprised of glass (possibly with ITO as a first electrode), quartz, plastic foils, metal, metal foils, silicon wafers or any other potential substrate material that encompasses very broad classes of OLED devices. Broadly, the OLED device could be bottom-emitting or top-emitting. The device could have the bottom electrode as anode or cathode respectively—in either a top or bottom emitting configuration.

Additionally, the encapsulation techniques and structures of the present invention could be used for any number of applications—e.g. active matrix, passive matrix, segmented, alpha-numeric, or backlight OLED displays or any combination thereof. It will be appreciated that any of these OLED devices could be some that have structures patterned on the OLED substrate that are much higher than the OLED stack itself—e.g. several micron high row separators (e.g. mushrooms) or an ink-confinement well/bank such as used in ink-jet-printed OLEDs. It is intended that the scope of the present invention includes encapsulating over these structures that are within the active areas of the display.

Additionally, it should be appreciated that the scope of the present invention also includes other displays and any electronic or other devices that require encapsulation—e.g. general organic electronic devices such as organic transistors, detectors, solar-cells, etc. (particular OLEDS) and also includes displays for lighting such as OLED-based light sources and backlights.

It should be appreciated that the present invention also comprises a myriad of electronic devices, said devices comprising: a substrate; a plurality of active areas disposed upon said substrate; a plurality of planarization layers disposed on said substrate whereby said planarization layer cover substantially only said active areas; and a plurality of barrier layers disposed on said substrate whereby said barrier layers cover substantially only said planarization layers. In particular, the present invention comprises electronic devices such as an OLED, an organic electronic circuit, an organic detector, an organic solar cell.

A UV-curable organic layer **304** is substantially deposited over the entire display glass comprise a plurality of OLED devices. Such suitable organic layer could be a liquid comprising acrylate, together with a photo initiator for selective curing—or other materials such as generally known in the PML and UV or otherwise curable organic planarization layer technology/prior art.

It should be appreciated that layer **304** could also be any suitable planarization layer. For example, an inorganic or hybrid planarization layer might also suffice as a buffer layer that has desirable planarizing and/or protecting properties from the barrier layer deposition process.

Additionally, a wet-processable and post-processing curable organic-metallic compounds such as spin-on glasses might suffice. Such an organic layer might provide a planar structure on which to deposit a barrier layer and to substantially cover point defects (e.g. dirt particles) in lower layers. It is generally desirable that the organic layer be deposited in sufficient quantity so that any such layer is no longer "conformal" to the point defect—i.e. any point defects are not geometrically projected upwards into layers deposited above. Such a first organic layer might also serve to protect the underlying OLED from potential damage due to the deposition of the first barrier layer.

In yet other embodiments, non-PML approaches could be used within the scope and principles of the present invention. For example, a non-liquid evaporated organic—e.g. polysiloxane as might be applied to later Figures.

It will be appreciated that there are many manners of depositing this organic layer upon the OLED device. For example, the layer could be either evaporated or flash evaporated. Alternatively, a liquid organic layer could be spun coated, dip coated, roll coated, spray-coated or blade coated—as is well known in the art. Additionally, other suitable printing technology could be employed, in particular, screen-printing or ink-jet printing.

Once the organic layer is deposited upon the OLED devices, UV-light is used to selectively cure the layer over the OLED devices to produce the desired cross-linking. This step could be accomplished by a mask **306** which blocks the UV light from areas where it is desired that the organic layer be removed. Alternatively, the cross-linking could be accomplished by using a UV light having an optical patterning system, such as a projection exposure system. In another embodiment, the cross-linking could be accomplished by selectively scanning the UV beam across the plate. In yet another embodiment, the layer need not necessarily have to be UV-cured. Instead, it could be thermally

cured—e.g. using a heat source that has a temperature profile, an IR laser, a stencil/stamp, or e-beam cured. Other methods might include: cross-linking, patterned heat transfer system, patterned IR source, masked IR source, scanned IR source, patterned e-beam, masked e-beam and scanned e-beam.

Once the organic layer has been selectively cross-linked, the remaining uncross-linked layer should be removed. This removal may be accomplished by thermal evaporation (e.g. by heating the substrate) or by using short higher temperature pulses (e.g. placing the OLED plate onto a hotplate). Other removal methods are also possible—e.g. pumping in a vacuum to remove the liquid organic layer. A combination of techniques is also possible applying thermal energy while pumping in a vacuum.

Still other methods of removal are possible—immersion in a rinse tank, spray-rinsing, ultra-sonicing (either dry or wet), or some combination of techniques (e.g. dry ultrasonic or mega-sonic in a vacuum). Plasma etching techniques could also be employed to aid the removal process. Additionally, laser-assisted methods such as laser ablation or providing heat via laser might suffice.

Once the residual organic layer has been removed, then a barrier layer is selectively deposited on the OLED plate. FIG. **3**B shows that-barrier layer **308** is selectively deposited over the OLED devices where the organic layer has been also deposited. Barrier layer **308** comprises any material that is suitable to protect the OLED device from the environmental effects of oxygen and moisture—and, as such, should be relatively impervious to them. Such barrier layer material might comprise a metal-oxide or a dielectric layer, e.g. SiOx (e.g. SiO2), SiNx (e.g. Si2N3), SiOxNy, AlOx (e.g. Al2O3), AlNx, ITO, ZnOx, Al-doped ZnOx, or any high barrier dielectrics or conductive oxides. Generally, any inorganic materials known in the prior art that give good oxygen and water barrier properties would suffice for purposes of the present invention. In the case of a bottom emitting display, the encapsulation does not have to be transparent, then metal or alloy films (e.g. Al or alloys, Cr, Cu or alloys, etc.) or non-transparent or colored dielectric films are potentially suitable, both evaporated or sputtered.

The deposition of the barrier layer can be any suitable method known in the art to deposit dielectric layers, metal-oxides, metals or alloys. For example, sputtering or reactive sputtering (DC, AC, pulsed, or a combination thereof) would suffice. Additionally, evaporation of such dielectrics (resistive heating or electron beam) or metal films is possible. Further, ion-beam assisted or other plasma-enhanced deposition methods are also possible.

It should be appreciated that other embodiments are possible. For example, the patterned UV cure described herein could be done such that the thickness of the planarization layer gradually decreases from the value over the active area to zero or near zero somewhere outside the active area. This may facilitate a nice smooth encapsulation of the OLED (or other structures) plus the planarization layer from the active area out to where there is no encapsulation (e.g. scribe/break line and/or contacts). It might be desirable to have the barrier layer slightly larger in area to cover the planarization layer because the planarization layer might not have such a sharp step and such a barrier layer coverage might provide adequate side step coverage. This embodiment applies also to the embodiments discussed herein, as they may be tuned to provide such a smooth transition of the buffer layer by way of re-flow or evaporation or printing or partial pre-cure and the like of the planarization layer at the edges prior to barrier layer deposition. In yet another embodiment, it might be desirable to encapsulate only the organic light-emissive areas (e.g. pixels) and leave the contact pads, auxiliary encapsulation areas, scribe/break areas free of the organic and barrier layers.

FIGS. **4**A and **4**B depict another embodiment of the present invention and particularly a different manner of encapsulating OLED devices. FIG. **4**A shows a step in the processing of present invention in which OLED devices **404** are formed on top of substrate **402**. Organic layer **406** is deposited over the entire substrate, covering OLED devices **404**. Then, barrier layer **408** is selectively deposited in a manner known in the art—e.g. through a mask or screen **410**—situated on top of the OLED devices. FIG. **4**B shows the next step in the processing after that portion of the unwanted organic layer **406** is removed by methods known in the art.

It will be appreciated that organic layer **406** may or may not be cured in its entirety and may or may not be cured selectively through a mask or screen. Likewise, it might be desirable not to cure the organic layer at all. In several embodiments, the organic may be either fully cured before patterned barrier layer deposition, partly cured or completely non-cured and that after the barrier layer deposition, there may be another cure step to ensure that the underlying organic is cured to the intended level, if it wasn't already before the barrier layer deposition. If the unwanted organic layer is etched away (by any number of etching methods known—e.g. chemical (dry or wet) etch, plasma-assisted (with or without oxygen), reactive-ion etching, anisotropic reactive-ion etching, etc.) then barrier layer **408** might act as an effective etch stop as well as laser assisted/based removal (e.g. laser ablation).

In addition, the organic layer could be deposited in any manner previously described (e.g. evaporation of a plurality of reactive organic molecules to form a condensed conformal layer on the substrate) or by well-known Parylene coating methods.

In one embodiment, it may be the case that the edges of the active areas are exposed; however, even if the planarization layer is only a few microns thick and the planarization+barrier layer perimeter around the active device is tens or even over 100 microns wide, then permeation of e.g. water through this thin planarization layer along the 10's or >100 microns should be slow. Alternatively, a second barrier layer may be larger than the area of the planarization layer so that the exposed planarization layer edge is covered with barrier layer also. This could also be achieved by making a potential second planarization layer+barrier layer stack wider than the first and so on. This can naturally already be done in previous embodiments by making the barrier layer mask wider.

FIG. **5** depicts another embodiment of encapsulation techniques in accordance with the present invention. In this embodiment, OLED device **504** is again formed upon substrate **502**. Organic layer **506** is deposited in a patterned fashion as well as barrier layer **508**. As organic layer **506** is deposited selectively; there may be no need to cure the layer. It should be appreciated that the cure and patterning aspects could be independent; —relating to the type of material and deposition technique of for the planarization layer. For example, if UV (or other)-curable liquids such as for PML or screen- or ink-jet print are used, then it is possible to cure. Alternatively, if evaporation of an organic through a mask is the relevant step, there may be no need to cure.

The manner of selectively depositing the organic layer and the barrier layer may be accomplished in a variety of

ways. For example, organic layer may be selectively deposited though a shadow mask (as depicted as mask **510**) or by ink jet deposition or other screen printing techniques. In fact, generally any printing techniques suitable to deliver the desired planarization layer material can be used. In similar fashion, barrier layer **508** may be selectively deposited. For alternative embodiments, it is possible to employ all options for selective deposition: same mask, different masks and also same mask with different substrate to mask distances (e.g. smaller distance for planarizing layer and then larger distance for barrier such that the barrier coverage is wider—because of slight non-directionality of and differences in the materials deposition).

In the case of printing, screen-printing, ink-jet-printing, the masks can either be not required (ink-jet) or possibly different from that used for a patterned sputter-deposited barrier layer deposition. For other embodiments, it may also be possible to partially cure the planarization layer, deposit the barrier layer and then complete the cure of the planarization layer, if necessary.

FIGS. **6**A through **6**E depict yet another embodiment of encapsulation techniques in accordance with the principles of the present invention. First, OLED device **602** is formed on substrate **600**. Then, mask **604** is formed onto substrate **600** with mask openings for OLED devices **602**.

It will be appreciated that a suitable mask might be formed in many possible manners. For example, such a mask might be a film laminated to the OLED or a mask pressed or pushed or clamped to the OLED. Additionally, such mask might be a multi-use mask or a one-off that then gets removed. Such mask might comprise a metal, ceramic, or plastic foil or sheet; it could also comprise a PTFE (Teflon) or a poly-siloxane type material (e.g. polydimethylsiloxane) or generally any material that does not stick to the OLED (which might cause damage or delamination when the mask is removed) and/or a material to which the encapsulation organic does not stick so well so that the mask's removal after encapsulation organic deposition and cure (complete or partial) does not remove the organic.

The mask might be such that it could be brought into contact with the OLED sufficiently well so that the encapsulation organic is confined over the desired areas and does not seep under the areas where the encapsulation organic is not desired (e.g. contact pads). Such a mask might comprise a "stamp" mask. Such a mask could be pressed on, clamped on, or the mask could be made of magnetic material and thus held by magnetic forces (e.g. with sheet magnet behind substrate that 'sucks' the mask to substrate). Additionally, the mask could be multi-use mask or one-off use. Vacuum-suction masks may also suffice. Additionally, a laminated film-mask could also suffice.

Once mask **604** is deposited, organic layer **606** is deposited in any suitable manner. For example, organic layer could be dispensed, squashed, rolled, printed, blade-coated, dropped into, sprayed onto the mask openings. Once deposited, then the organic layer may or may not be cured—either partially or completely prior to the removal of mask **604**. The mask could be removed by any means known in the art—e.g. by peeling it off; mechanical removal if a stencil, and the like.

It will be appreciated that the edges of the planarization layer may or may not reflow such that the subsequently deposited barrier gives better barrier edge coverage.

After the mask is removed, then barrier layer **608** is selectively deposited over the planarization layers covering the OLED devices. Any known technique for such selective deposition is suitable for purposes of the present invention. For various alternative embodiments, it is possible to either fully cure then remove mask; partly cure then remove mask; no cure then remove mask. These variations may also be in combination with potentially another cure after the barrier layer deposition. Specifically, it might be possible to slightly cure then remove mask then e.g. heat to reflow to smoothen the edges—then continue with full cure/barrier layer deposition.

In yet another embodiment, it is also possible to deposit both the planarization and barrier layer(s) before the removal of the mask.

In yet other embodiments, all encapsulation process steps could be accomplished in an inert atmosphere (i.e. with reduced oxygen, ozone, other reactive gases and in particular moisture). Alternatively, only the first organic layer and first barrier layer ("dyad") could be done in an inert atmosphere. Alternatively, only the first organic layer could be done in an inert atmosphere.

Other embodiments might include encapsulation with a secondary encapsulation layer for additional protection. This might be accomplished by laminating, glueing or otherwise depositing a plastic, metal, metal plus plastic foil, thin glass, thick glass or metal sheet over said OLED display sheet. Said secondary encapsulation may include a getter material (e.g. zeolite, reactive metal, reactive metal-oxide, metal-sulfide, etc.; in film, powder, paste, tablet, etc. form) in the package to absorb water, oxygen or other reactive gases. Singulation could be accomplished either before or after secondary encapsulation.

FIGS. **7**A through **7**C depict a novel gas nozzle deposition system for the deposition of several layers, including the planarization layer. FIG. **7**A shows one gas nozzle **704** as it is depositing a layer onto a device **702** upon a substrate **700**. Nozzle **704** comprises at least a nozzle **706** that directs a gas, preferably inert, and a nozzle **708** that directs the material to be deposited—e.g. acrylate—onto the device. The gas directs the depositing material away from areas that should be free of deposition. FIG. **7**B shows the device **702** after having been covered with the layer by the gas nozzle system. More precisely, area **710** has been covered with the layer—while area **712** is left free of the deposit. Such an area **712** might represent electrical contacts, scribe lines, or other areas that are desired to be free of such deposit.

FIG. **7**C depicts the action of an array of such gas nozzles **720** that effects a deposition over a plate **700** of devices **702**. Array **720** would comprise a plurality of planarization layer nozzles **721** and inert gas nozzles **723** that are advantageously disposed above the plate of devices so that the layer being deposited is done in only those areas desired. Area **730** is such a desired area for deposition, out of a total area **732** for the device. Array **720** and plate **700** could be placed into relative motion in order to effect an efficient deposition upon a plurality of devices. Direction **722** depicts a possible motion of the array over the plate; while direction **724** depicts a possible motion of the plate under the array—any combination of the two motions are also possible.

It has now been shown several embodiments of advanced encapsulation techniques performed in accordance with the principles of the present invention. It will be appreciated that the present invention is meant to cover any and all obvious variations as described herein.

What is claimed is:

1. A method of encapsulating a plurality of devices fabricated upon a substrate, the steps of said method comprising:

fabricating a plurality of devices on a substrate;

depositing at least one planarization layer upon said devices;

hardening said at least one planarization layer in a patterned manner such that the

hardened region substantially coven said device;

removing areas of the at least one planarization layer that are not hardened; and

selectively depositing at least one barrier layer over said hardened region.

2. The method as recited in claim **1** wherein said step of depositing at least one planarization layer comprises spin coating.

3. The method as recited in claim **1** wherein said step of depositing at least one planarization layer comprises flash evaporation.

4. The method as recited in claim **1** wherein said step of depositing at least one planarization layer comprises evaporation.

5. The method as recited in claim **1** wherein said step of depositing at least one planarization layer comprises blade coating.

6. The method as recited in claim **1** wherein said step of depositing at least one planarization layer comprises roll coating.

7. The method as recited in claim **1** wherein said step of depositing at least one planarization layer comprises dip coating.

8. The method as recited in claim **1** wherein said step of depositing at least one planarization layer comprises spray-coating.

9. The method as recited in claim **1** wherein said step of depositing at least one planarization layer comprises screen printing or ink jet printing.

10. The method as recited in claim **1** wherein the step of hardening said at least one planarization layer in a patterned manner comprises flood-exposure of UV light through a mask or scanning a line-source of UV light through a mask.

11. The method as recited in claim **1** wherein the step of hardening said at least one planarization layer in a patterned manner comprises exposure by UV light comprising an optical patterning system.

12. The method as recited in claim **1** wherein the step of hardening said at least one planarization layer in a patterned manner comprises exposure by UV light comprising a UV-beam scanning system.

13. The method as recited in claim **1** wherein the step of hardening said at least one planarization layer further comprises cross-linking, patterned heat transfer system, patterned IR source, masked IR source, scanned IR source, patterned e-beam, masked e-beam or scanned e-beam.

14. The method as recited in claim **1** wherein the step of removing areas of the at least one planarization layer that are not hardened comprises removing by thermal evaporation.

15. The method as recited in claim **14** wherein the step of removing by thermal evaporation further comprises applying a short high temperature pulse.

16. The method as recited in claim **15** wherein the step of applying a short high temperature pulse further comprises placing the plurality of devices onto a hotplate.

17. The method as recited in claim **1** wherein the step of removing areas of the at least one planarization layer that are not hardened comprises removing by pumping in a vacuum.

18. The method as recited in claim **1** wherein the step of removing areas of the at least one planarization layer that are not hardened comprises removing by thermal evaporation and pumping in a vacuum.

19. The method as recited in claim **1** wherein the step of removing areas of the at least one planarization layer that are not hardened comprises washing, blowing away, rinsing, sonicing, or plasma.

20. The method as recited in claim **1** wherein the step of selectively depositing at least one barrier layer further comprises a barrier layer comprising a dielectric, a metal, a metal-oxide or an alloy.

21. The method as recited in claim **1** wherein the step of selectively depositing at least one barrier layer further comprises depositing said barrier layer through a mask.

22. The method as recited in claim **1** wherein the step of selectively depositing at least one barrier layer further comprises depositing the barrier layer in a larger area than the planarization layer.

23. The method as recited in claim **1** wherein the step of selectively depositing at least one barrier layer further comprises depositing metal-oxide, dielectric layer, SiOx, SiNx , SiOxNy, AlOx, AlNx, ITO, ZnOx, Al-doped ZnOx, metal film, or alloy film.

24. The method as recited in claim **1** wherein said plurality of devices are a plurality of OLED displays and substantially only light emissive areas of said plurality of OLED displays are covered by the planarization layer and the barrier layer.

25. A method of encapsulating a plurality of devices fabricated upon a substrate, the steps of said method comprising

fabricating a plurality of devices on a substrate;

depositing at least one planarization layer upon said devices wherein said planarization layer is deposited as an unpatterned liquid film;

selectively depositing at least one barrier layer over said planarization layer; and

removing said areas of unwanted planarization layer.

26. The method as recited in claim **25** wherein said step of depositing at least one planarization layer further comprises curing an organic layer selectively over the substrate.

27. The method as recited in claim **25** wherein said step of depositing at least one planarization layer further comprises curing an organic layer over the entire substrate.

28. The method as recited in claim **25** wherein said step of depositing at least one planarization layer further comprises evaporating a plurality of reactive organic molecules, said reactive organic molecules comprising a condensed conformal film on the substrate.

29. The method as recited in claim **25** wherein said step of depositing at least one planarization layer further comprises a Parylene coating of said organic layer over the substrate, or a plasma-assisted organic material deposition.

30. The method as recited in claim **25** wherein the step of removing said areas of unwanted planarization layer further comprises etching art organic layer.

31. The method as recited in claim **25** wherein the step of removing said areas of unwanted planarization layer further comprises etching an organic layer with a chemical etch process.

32. The method as recited in claim **25** wherein the step of removing said areas of unwanted planarization layer further comprises etching an organic layer with a plasma-assisted etching process, oxygen plasma, reactive ion-etch, anisotropic etch, laser assisted/based removal or laser ablation.

33. The method as recited in claim **25** wherein the step of removing said areas of unwanted planarization layer further comprises removing said organic layer.

34. A method of encapsulating a plurality of devices fabricated upon a substrate, the steps of said method comprising:

fabricating a plurality of devices on a substrate;

selectively depositing at least one planarization layer upon said devices; and

selectively depositing at least one barrier layer over said planarization layer.

35. The method as recited in claim **34** wherein the step for selectively depositing at least one planarization layer further comprises depositing by ink jet of an organic layer.

36. The method as recited in claim **34** wherein the step for selectively depositing at least one planarization layer further comprises depositing by screen printing of an organic layer or depositing by gas nozzle.

37. The method as recited in claim **34** wherein the step for selectively depositing at least one planarization layer further comprises depositing an organic layer through a shadow mask.

38. The method as recited in claim **34** wherein the step for selectively depositing at least one barrier layer further comprises depositing by ink jet of said barrier layer.

39. The method as recited in claim **34** wherein the step for selectively depositing at least one barrier layer further comprises depositing by screen printing of said barrier layer.

40. The method as recited in claim **34** wherein the step for selectively depositing at least one barrier layer further comprises depositing by shadow mask, sputtering, ink jet deposition, screen printing evaporation.

41. A method of encapsulating a plurality of devices fabricated upon a substrate, the steps of said method comprising:

fabricating a plurality of devices on a substrate;

depositing a mask on top of said substrate, such that mask openings are placed on top of said devices;

depositing at least one planarization layer upon said mask and said plurality of devices;

removing said mask from said substrate; and

selectively depositing at least one barrier layer over said planarization layer.

42. The method as recited in claim **41** wherein the step of depositing said mask further comprises depositing a stamp mask, depositing a laminated film-mask, depositing a vacuum mask, or magnetically held mask.

43. The method as recited in claim **41** wherein the step of depositing said mask further comprises depositing said mask such that said mask is in contact with said substrate.

44. The method as recited in claim **41** wherein the step of depositing said mask further comprises depositing a mask, said mask comprising a material substantially non-sucking to OLED substrate over the areas in between the active areas.

45. The method as recited in claim **41** wherein the step of depositing said mask further comprises depositing a mask, said mask comprising a metal, a ceramic, a plastic, a polymer, PTFE, or poly-siloxane.

46. The method as recited in claim **41** wherein the step of depositing at least one planarization layer further comprises depositing an organic layer over the entire mask.

47. A method of encapsulating a plurality of devices fabricated upon a substrate, the steps of said method comprising:

fabricating a plurality of devices on a substrate;

depositing at least one planarization layer upon said devices; and

depositing at least one barrier layer over planarization layer wherein one or both said layers are directed away from areas that should be free of deposition by an inert gas.

48. The method as recited in claim **47** wherein the at least one said step accomplished in an inert atmosphere is the step of depositing at least one planarization layer.

49. The method as recited in claim **47** wherein the at least one said step accomplished in an inert atmosphere is the step of depositing at least one barrier layer.

50. The method as recited in claim **47** wherein the at least one said step accomplished in an inert atmosphere is both the step of depositing at least one planarization layer and the stop of depositing at least one barrier layer.

51. The method as recited in claim **47** wherein said inert gas is injected through an array of nozzles and at least one of said planarization layer and said barrier layer are deposited using said array of nozzles.

52. An electronic device, said device comprising:

a substrate;

a plurality of active areas disposed upon said substrate;

a plurality of planarization layers disposed on said substrate whereby said planarization layer cover substantially only said active areas; and

a plurality of barrier layers disposed on said substrate whereby said barrier layers cover substantially only said planarization layers.

53. The electronic device as recited in claim **52** wherein said electronic device comprises an OLED, an organic electronic circuit, an organic detector or, an organic solar cell.

* * * * *

UNITED STATES PATENT AND TRADEMARK OFFICE

CERTIFICATE OF CORRECTION

PATENT NO. : 6,949,389 B2
DATED : September 27, 2005
INVENTOR(S) : Karl Pichler and Kyle D. Frischknecht

It is certified that error appears in the above-identified patent and that said Letters Patent is hereby corrected as shown below:

Title page,
Item [75], Inventors, second inventor should read -- **Kyle D. Frischknecht** --.

Signed and Sealed this

Seventh Day of February, 2006

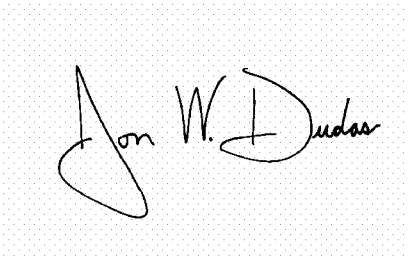

JON W. DUDAS
Director of the United States Patent and Trademark Office