US 20050189857A1

(19) United States

(12) Patent Application Publication

(10) Pub. No.: US 2005/0189857 A1

(43) Pub. Date: Sep. 1, 2005

Kobori

(54) DISPLAY DEVICE, DISPLAY UNIT, AND IMAGING DEVICE

(75) Inventor: **Isamu Kobori**, Tokyo (JP)

Correspondence Address:
SONNENSCHEIN NATH & ROSENTHAL LLP
P.O. BOX 061080
WACKER DRIVE STATION, SEARS TOWER
CHICAGO, IL 60606-1080 (US)

(73) Assignee: **Sony Corporation**

(21) Appl. No.: **11/065,271**

(22) Filed: **Feb. 24, 2005**

(30) **Foreign Application Priority Data**

Feb. 27, 2004 (JP) P2004-054473

Publication Classification

(51) **Int. Cl.**[7] **H01J 1/62**

(52) **U.S. Cl.** **313/110**; 313/504

(57) **ABSTRACT**

The invention provides a display device capable of improving color separation characteristics by using a color filter having high transmittance. An organic light emitting device emits blue light, red light, and green light, and the emission intensity of the green light is relatively lower than those of the blue light and the red light. A green fluorescence conversion layer for absorbing a blue wavelength component and emits green light is provided between the organic light emitting device and a green filter layer. Color purity of blue and red is improved by decreasing a green light emitting component causing decreasing color purity when blue and red are separated by a color filter, and by using the color filter having high transmittance and low density. The decreased green light emitting component is complemented with the green fluorescence conversion layer, chromaticity is adjusted by a green filter layer, and thereby light emitting efficiency and color reproducibility are improved.

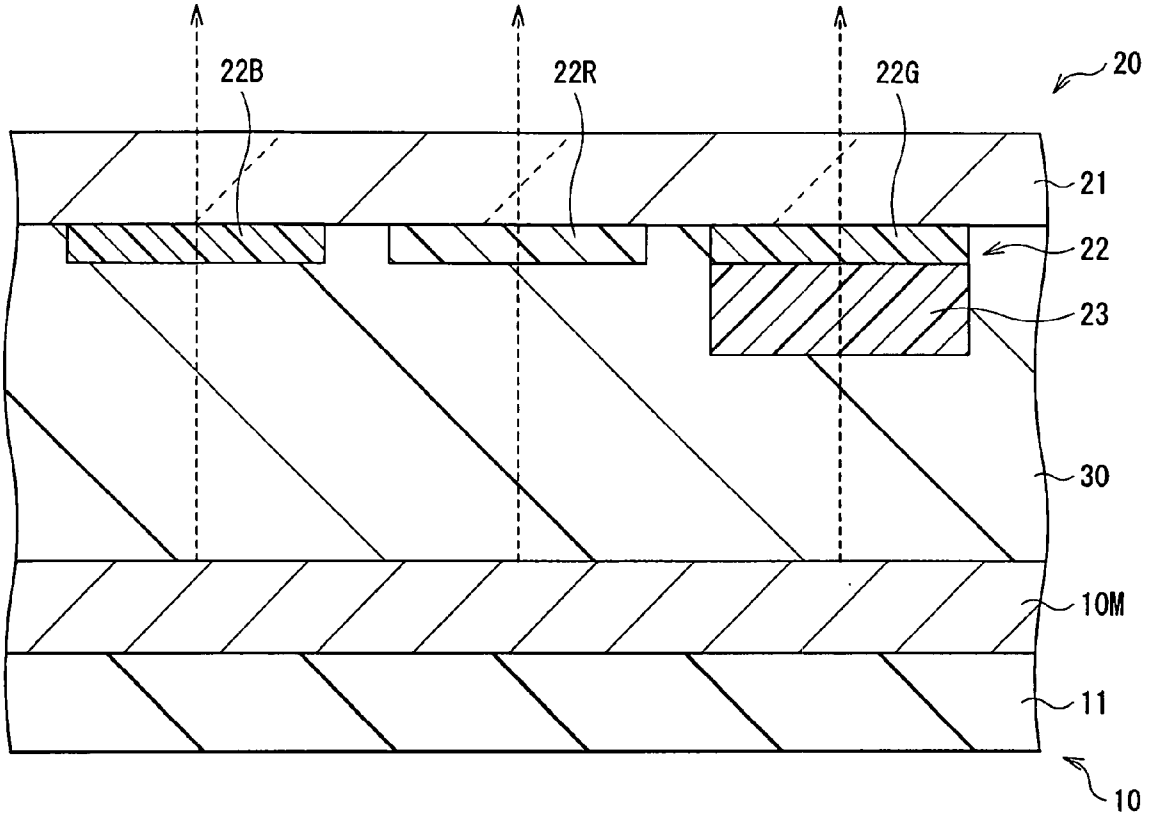

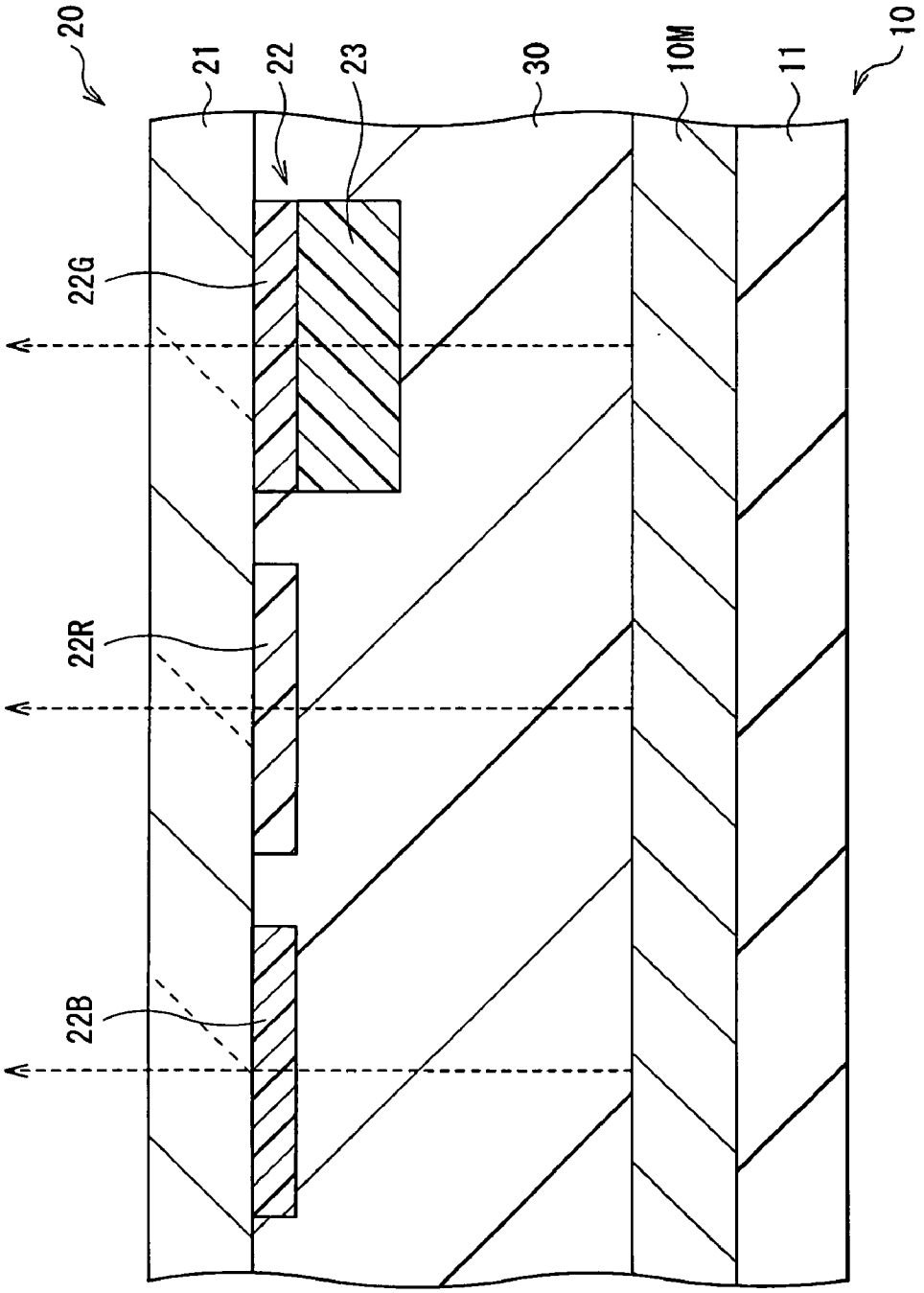

FIG. 1

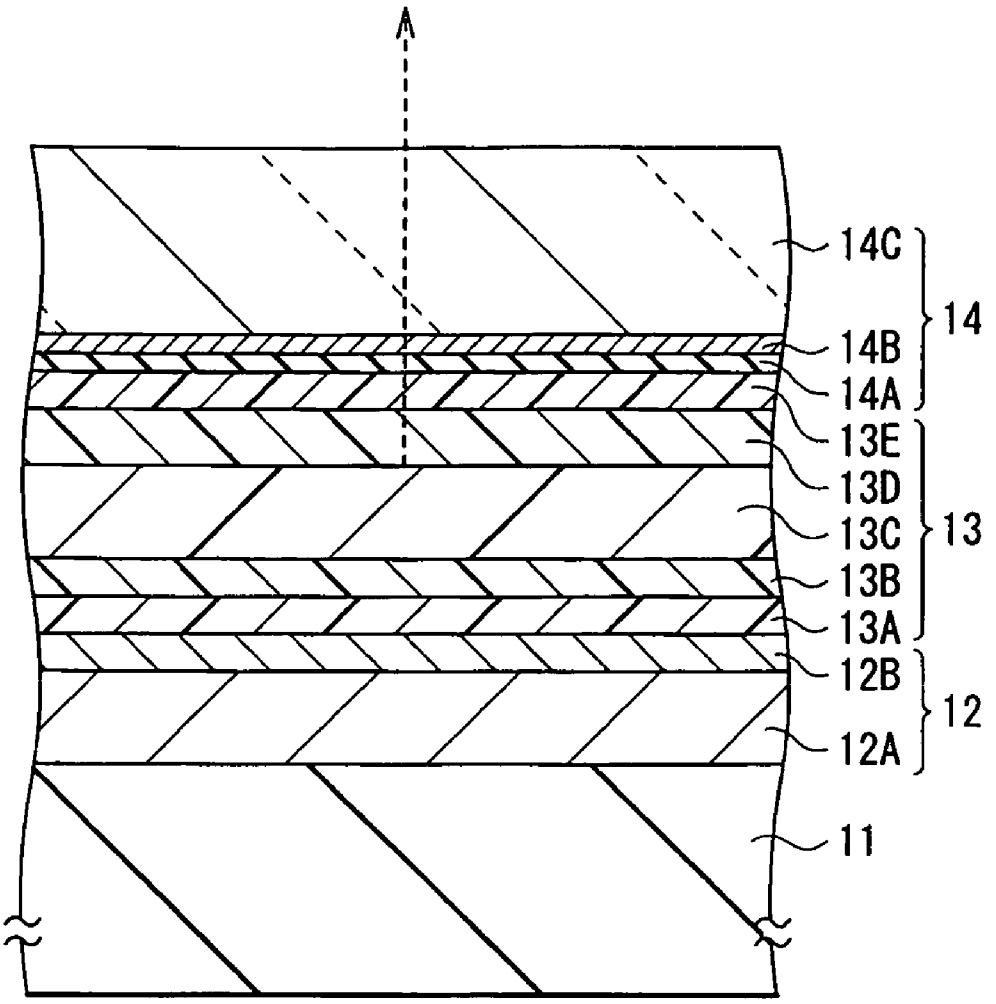

FIG. 2

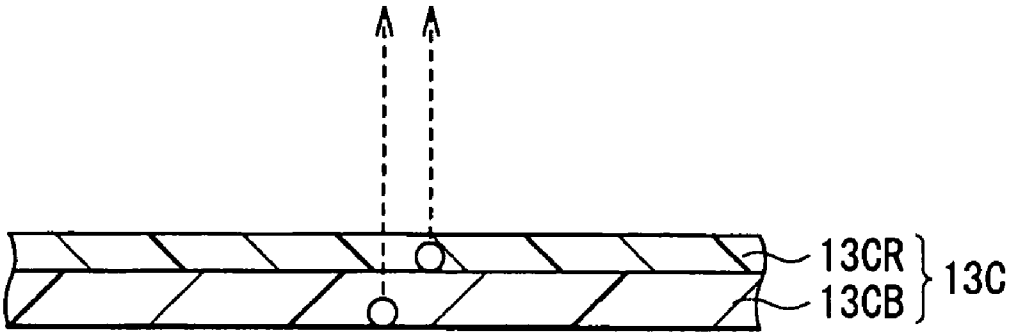

FIG. 3

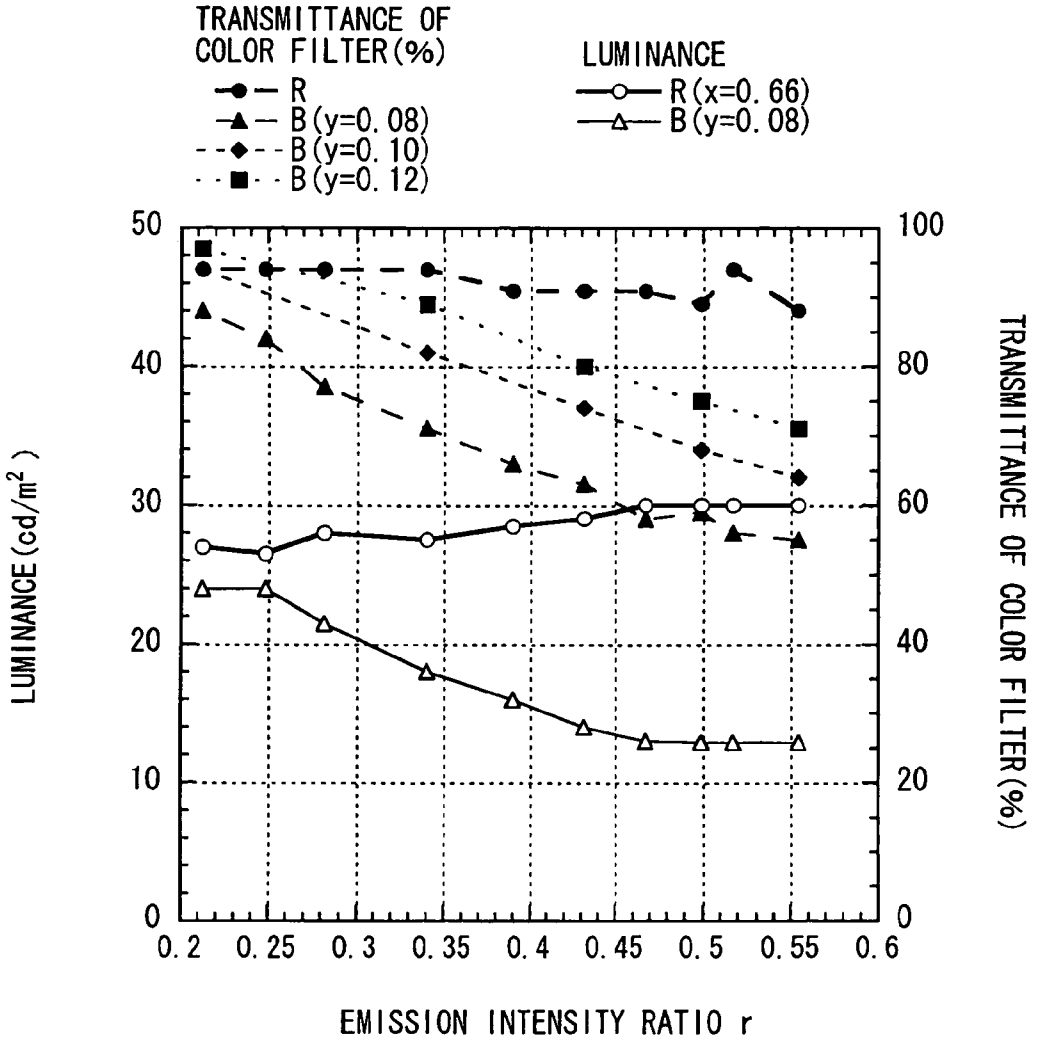
TRANSMITTANCE OF COLOR FILTER(%)
R
B(y=0.08)
B(y=0.10)
B(y=0.12)
LUMINANCE
R(x=0.66)
B(y=0.08)
LUMINANCE(cd/m²)
TRANSMITTANCE OF COLOR FILTER(%)
EMISSION INTENSITY RATIO r
0
10
20
30
40
50
0
20
40
60
80
100
0.2
0.25
0.3
0.35
0.4
0.45
0.5
0.55
0.6

FIG. 4

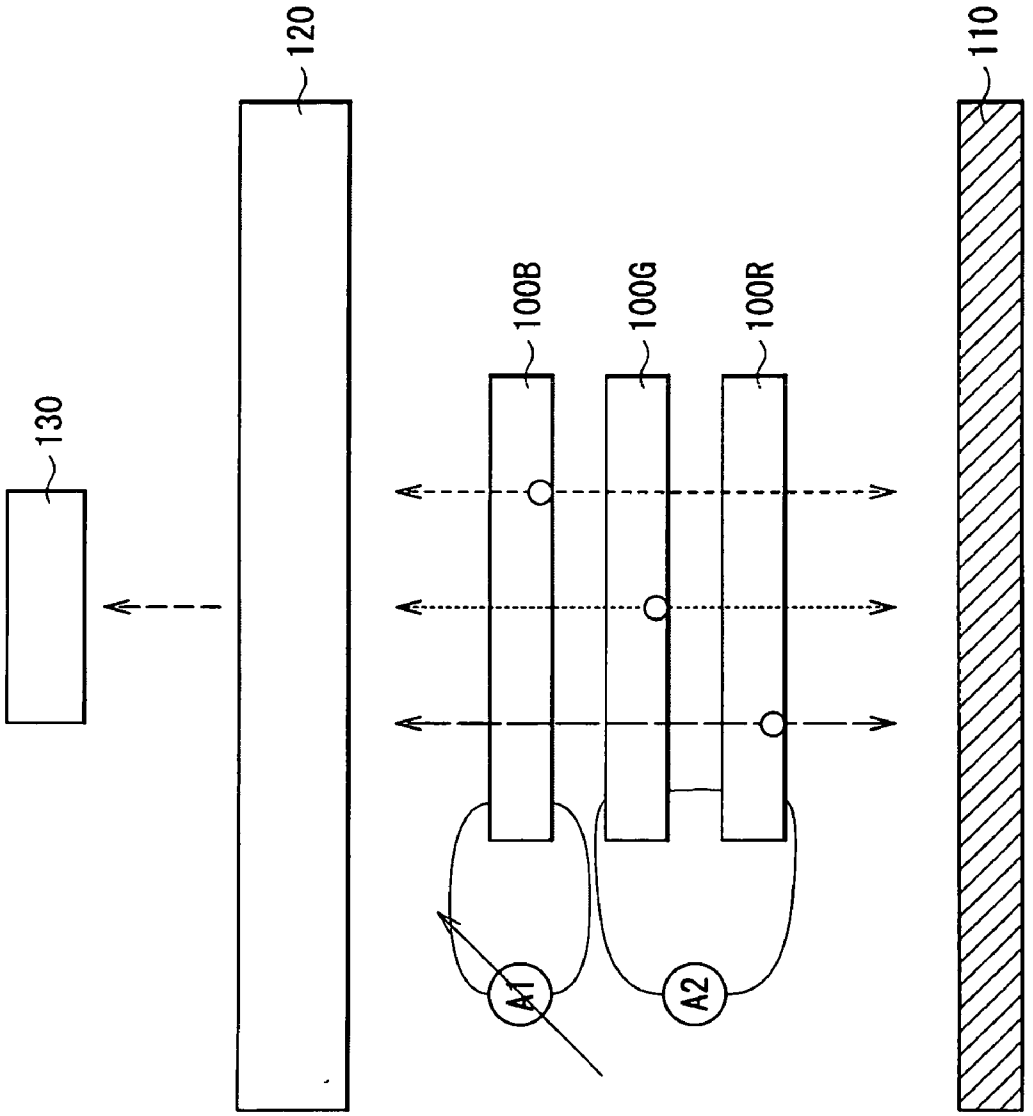

FIG. 5

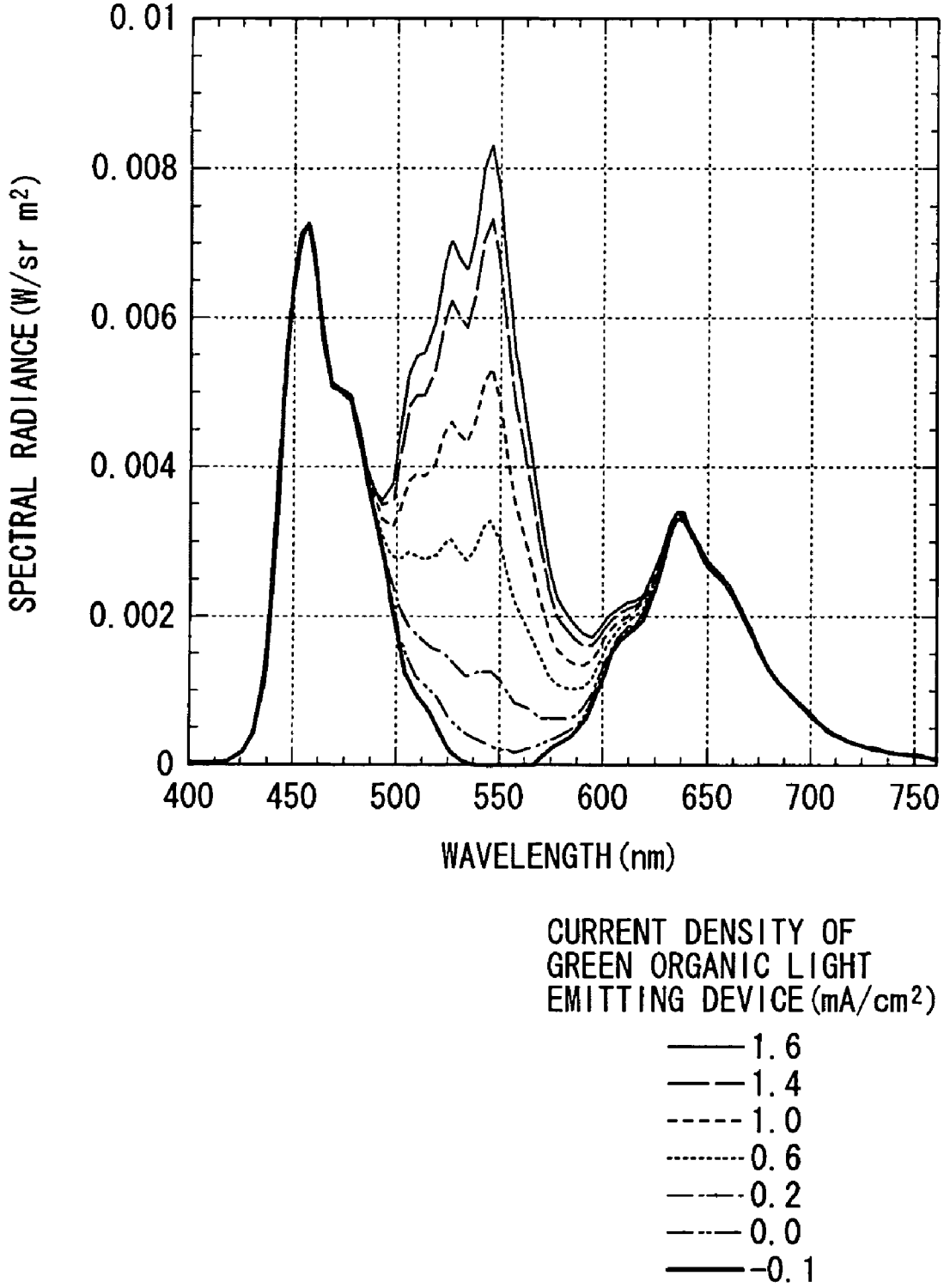
0.01
0.008
0.006
0.004
0.002
0
SPECTRAL RADIANCE (W/sr m2)
400
450
500
550
600
650
700
750
WAVELENGTH (nm)
CURRENT DENSITY OF GREEN ORGANIC LIGHT EMITTING DEVICE (mA/cm2)
1.6
1.4
1.0
0.6
0.2
0.0
-0.1

FIG. 6

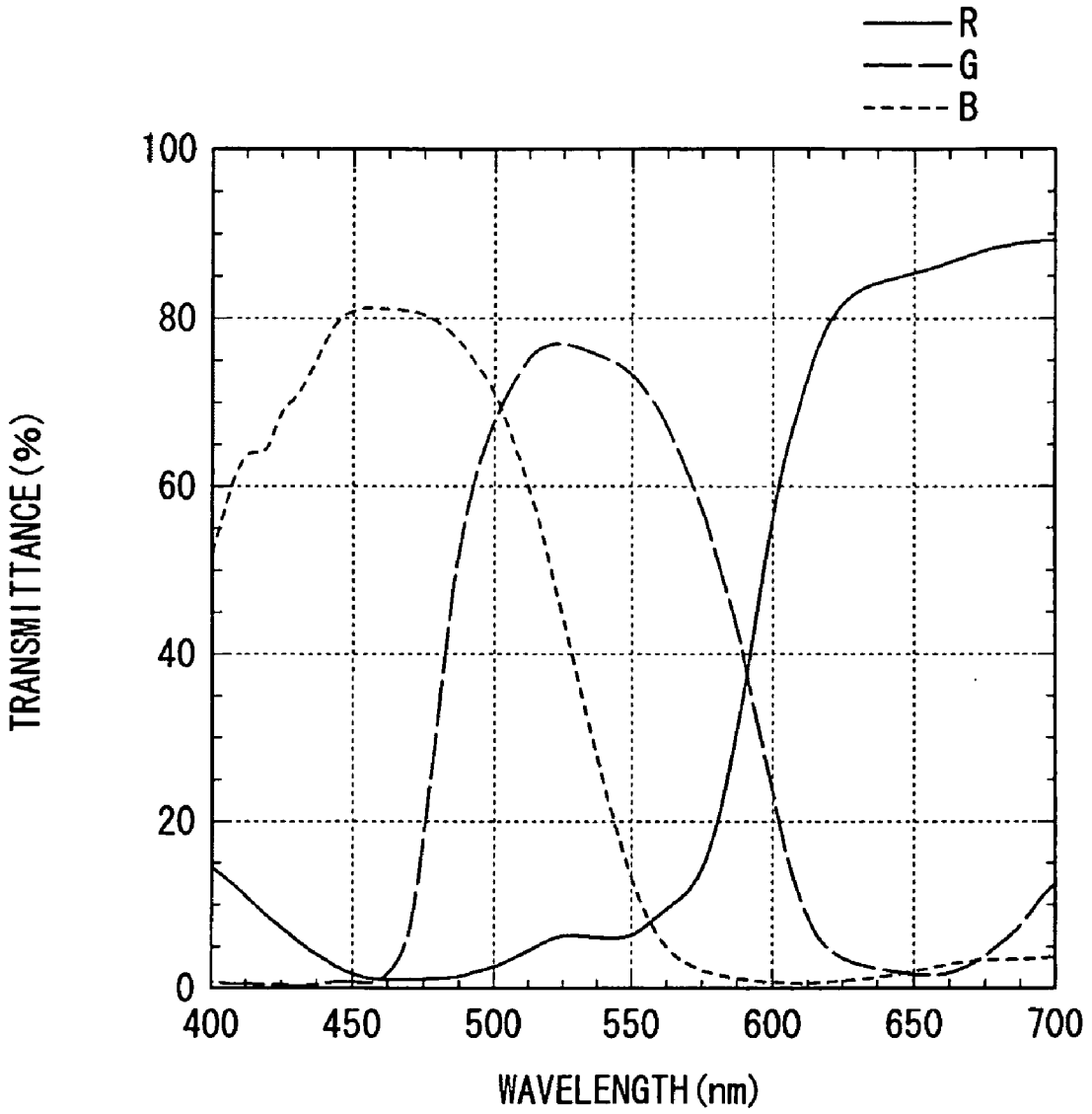
R
G
B
100
80
60
40
20
0
TRANSMITTANCE (%)
400
450
500
550
600
650
700
WAVELENGTH (nm)

FIG. 7

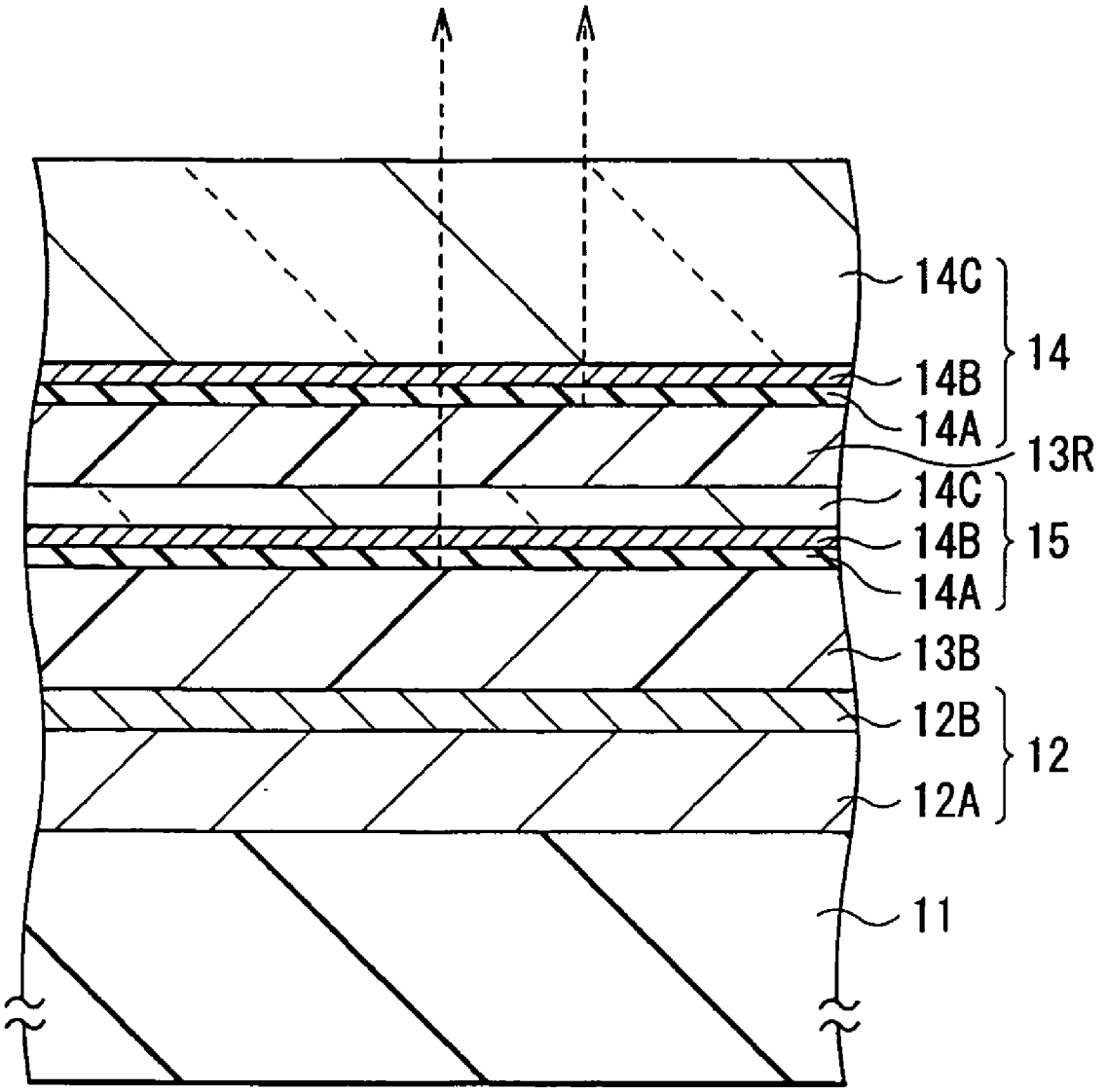

FIG. 8

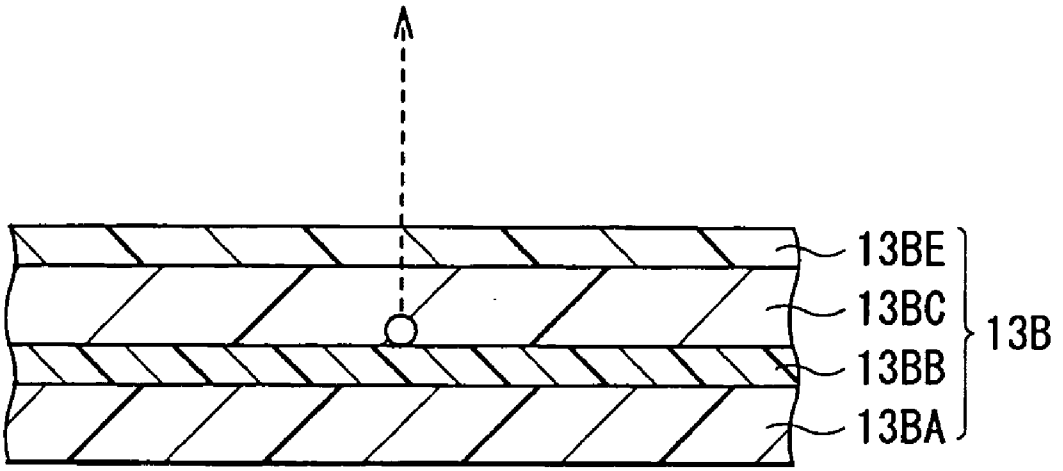

FIG. 9

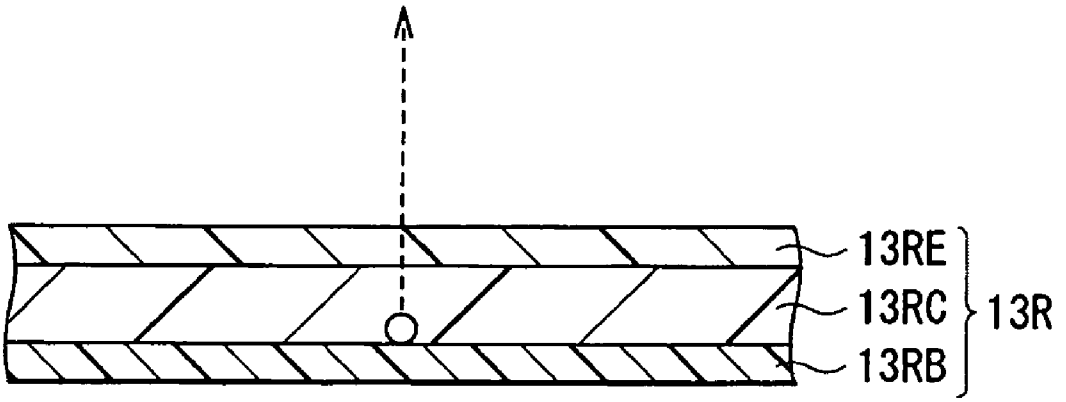

FIG. 10

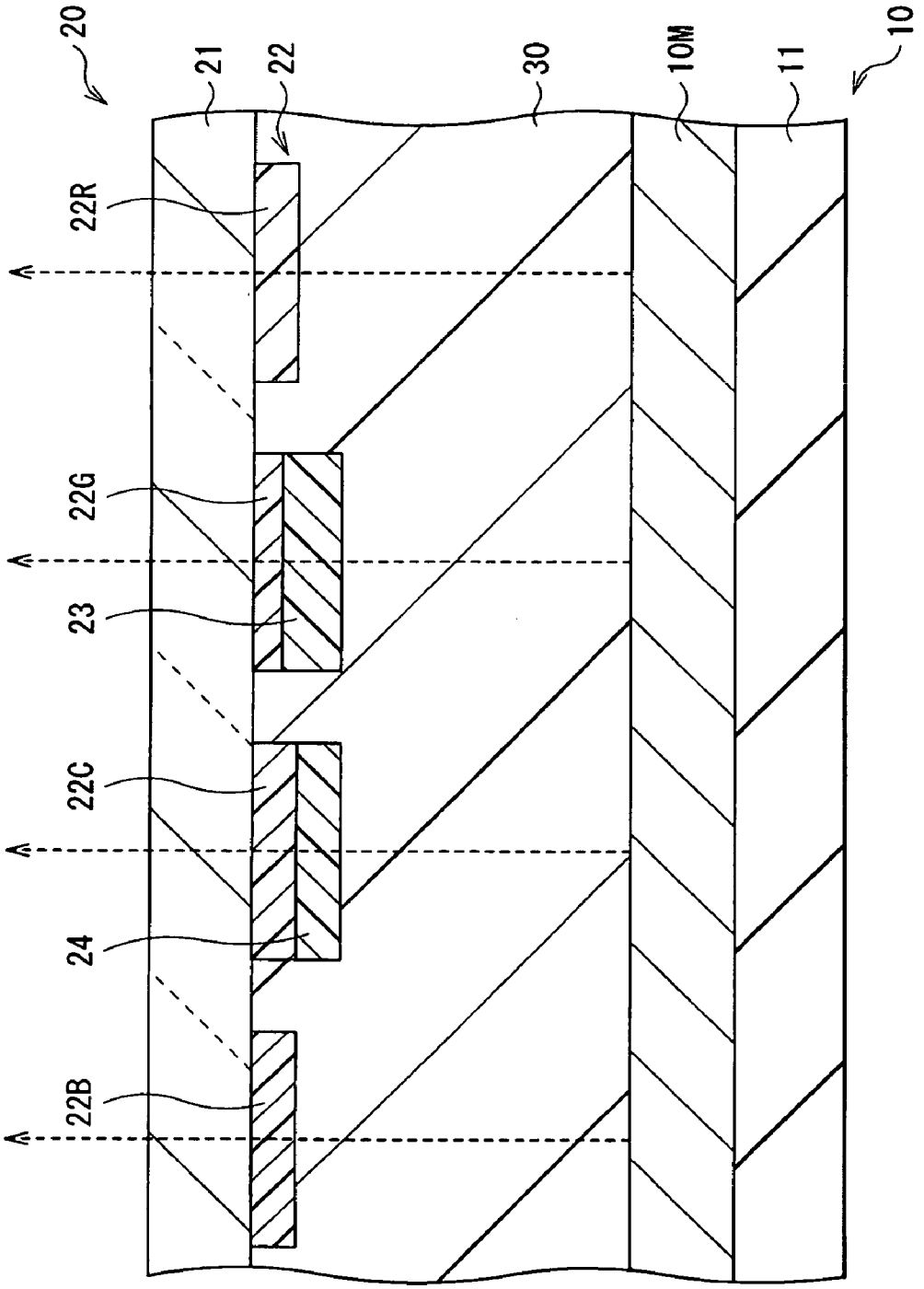

FIG. 11

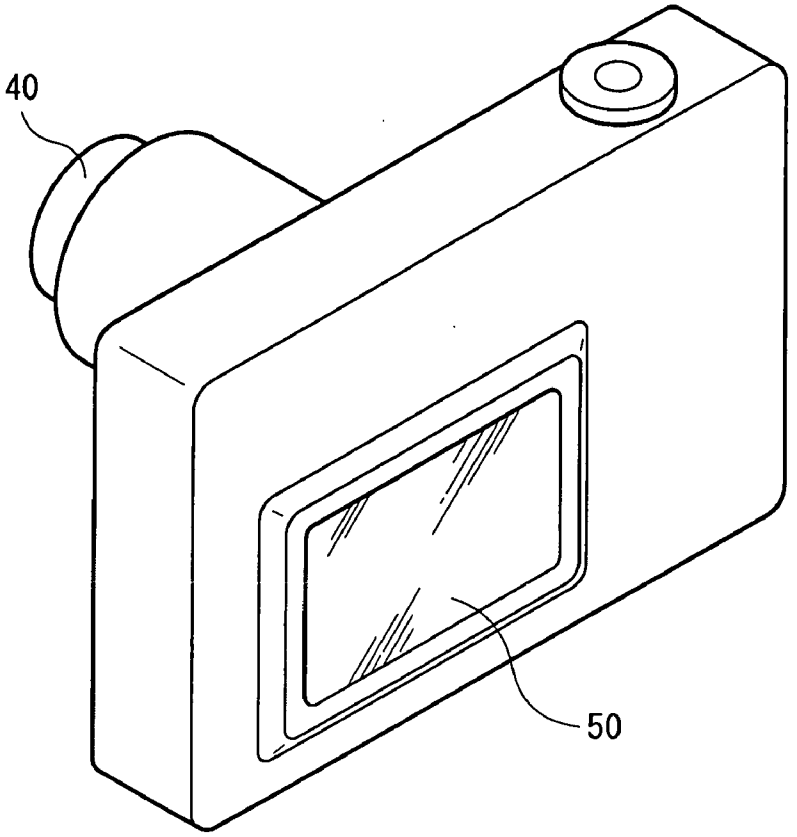

FIG. 12

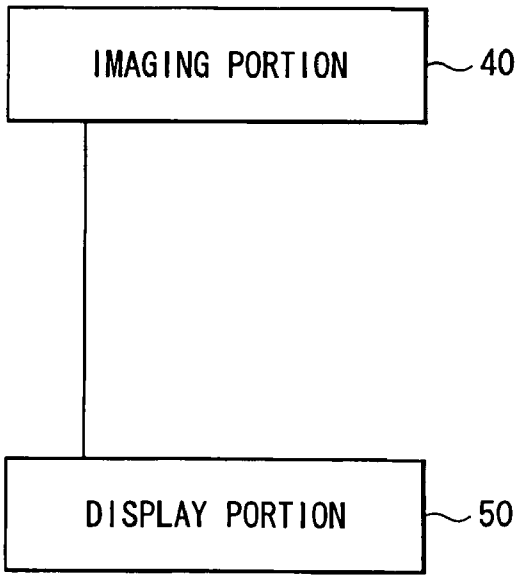

FIG. 13

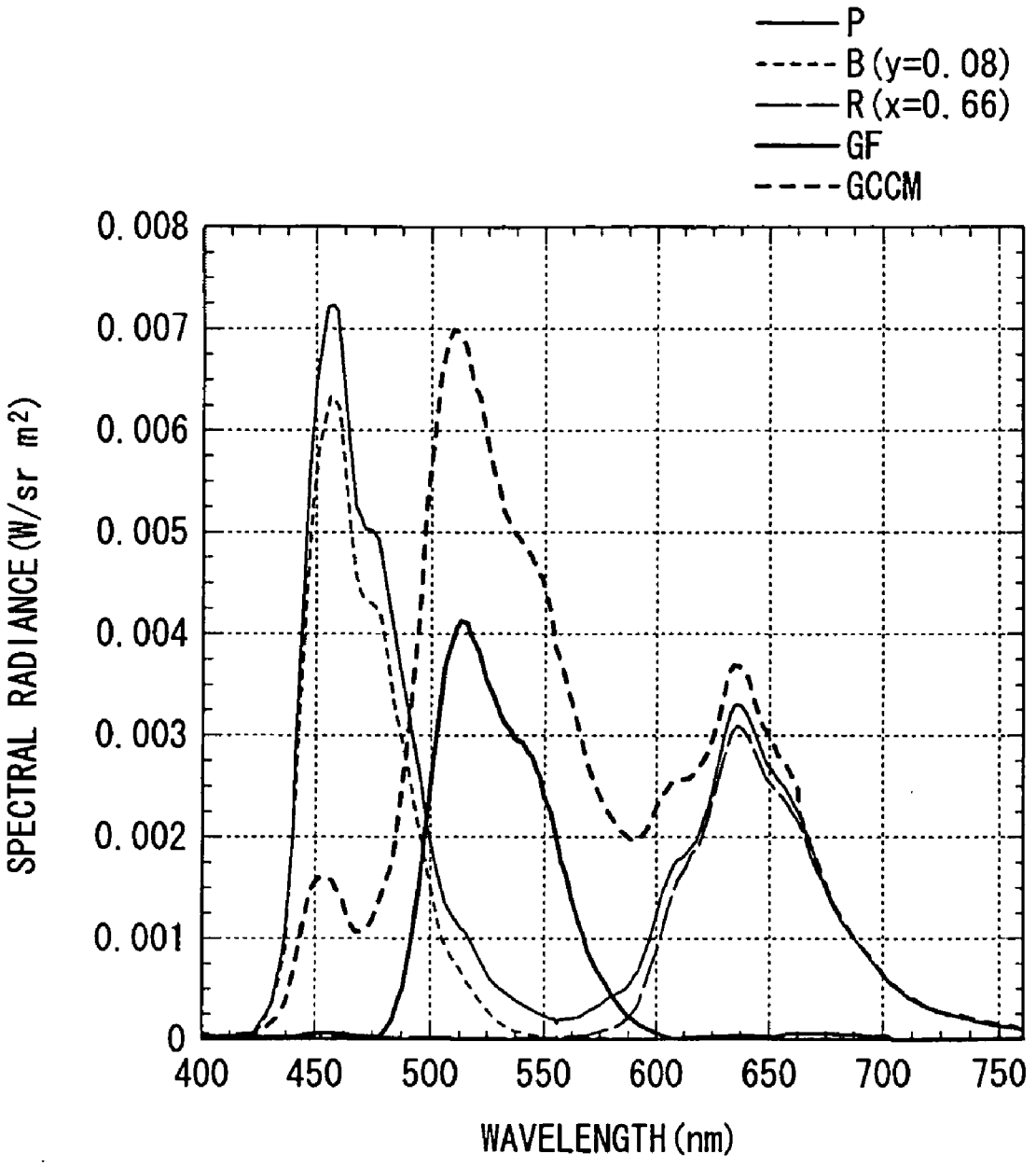
P
B (y=0. 08)
R (x=0. 66)
GF
GCCM
0. 008
0. 007
0. 006
0. 005
0. 004
0. 003
0. 002
0. 001
0
SPECTRAL RADIANCE (W/sr m2)
400
450
500
550
600
650
700
750
WAVELENGTH (nm)

FIG. 14

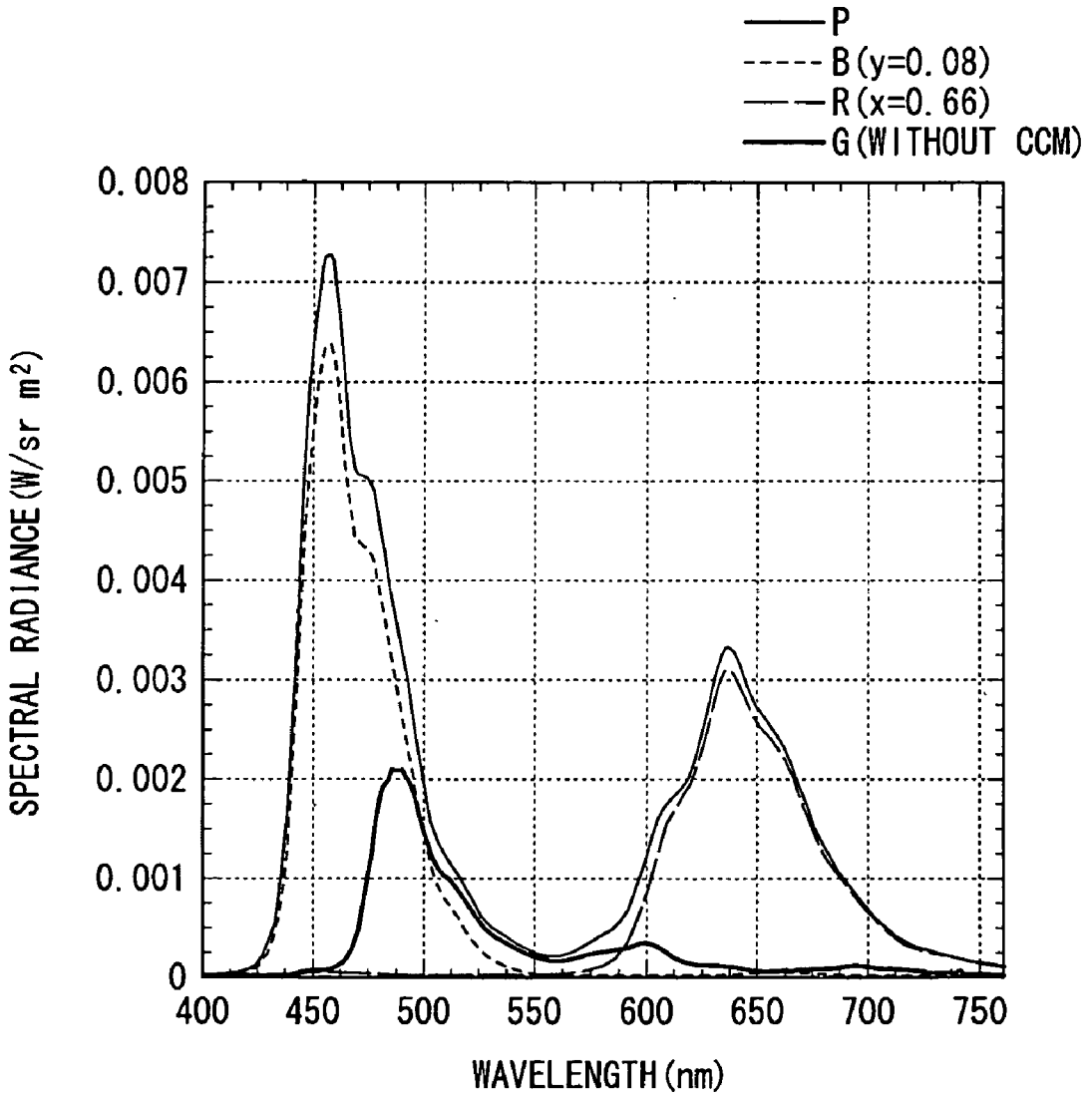
P
B (y=0.08)
R (x=0.66)
G (WITHOUT CCM)
0.008
0.007
0.006
0.005
0.004
0.003
0.002
0.001
0
SPECTRAL RADIANCE (W/sr m2)
400
450
500
550
600
650
700
750
WAVELENGTH (nm)

FIG. 15

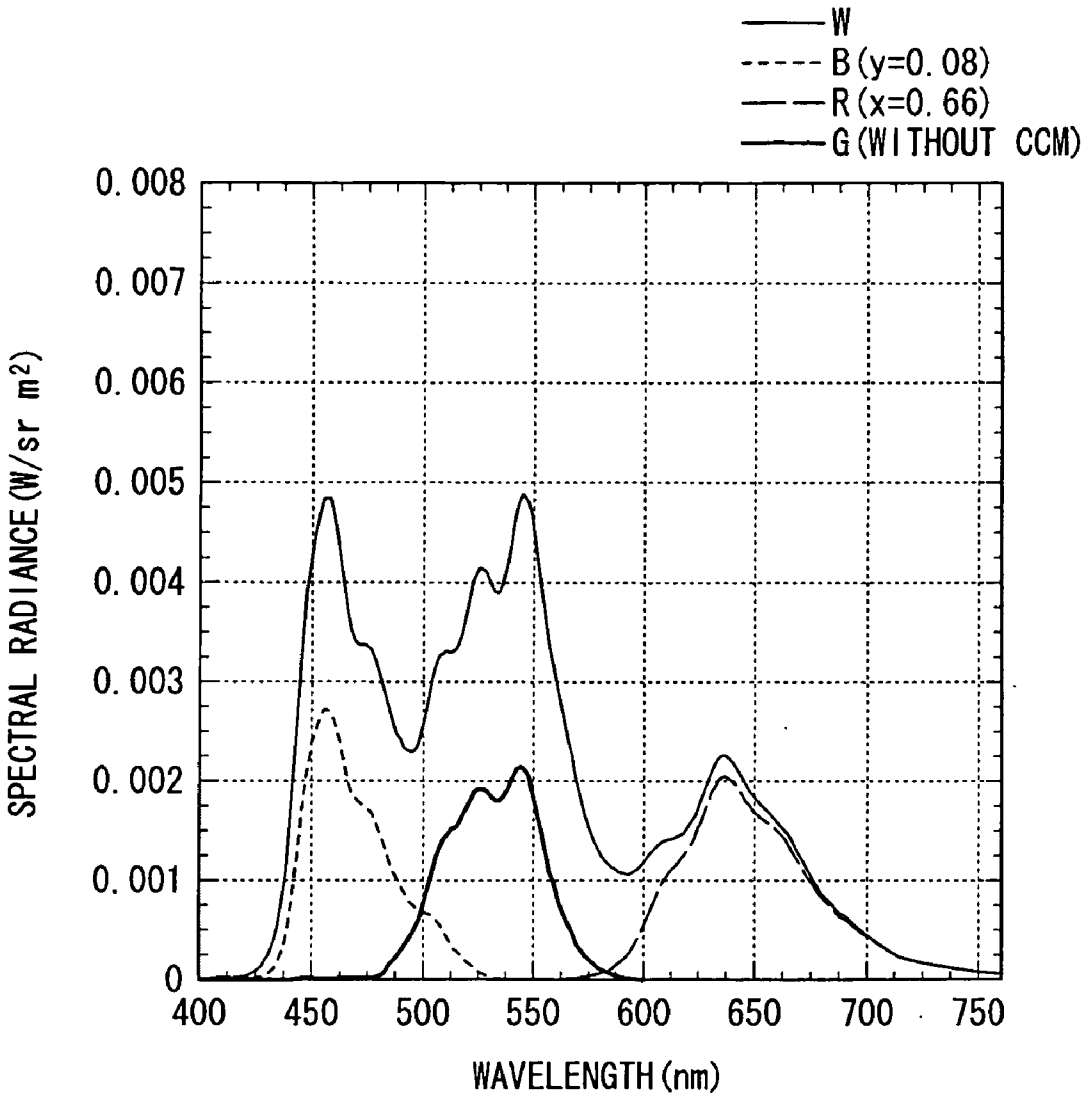
W
B (y=0.08)
R (x=0.66)
G (WITHOUT CCM)
0.008
0.007
0.006
0.005
0.004
0.003
0.002
0.001
0
SPECTRAL RADIANCE (W/sr m²)
400
450
500
550
600
650
700
750
WAVELENGTH (nm)

FIG. 16

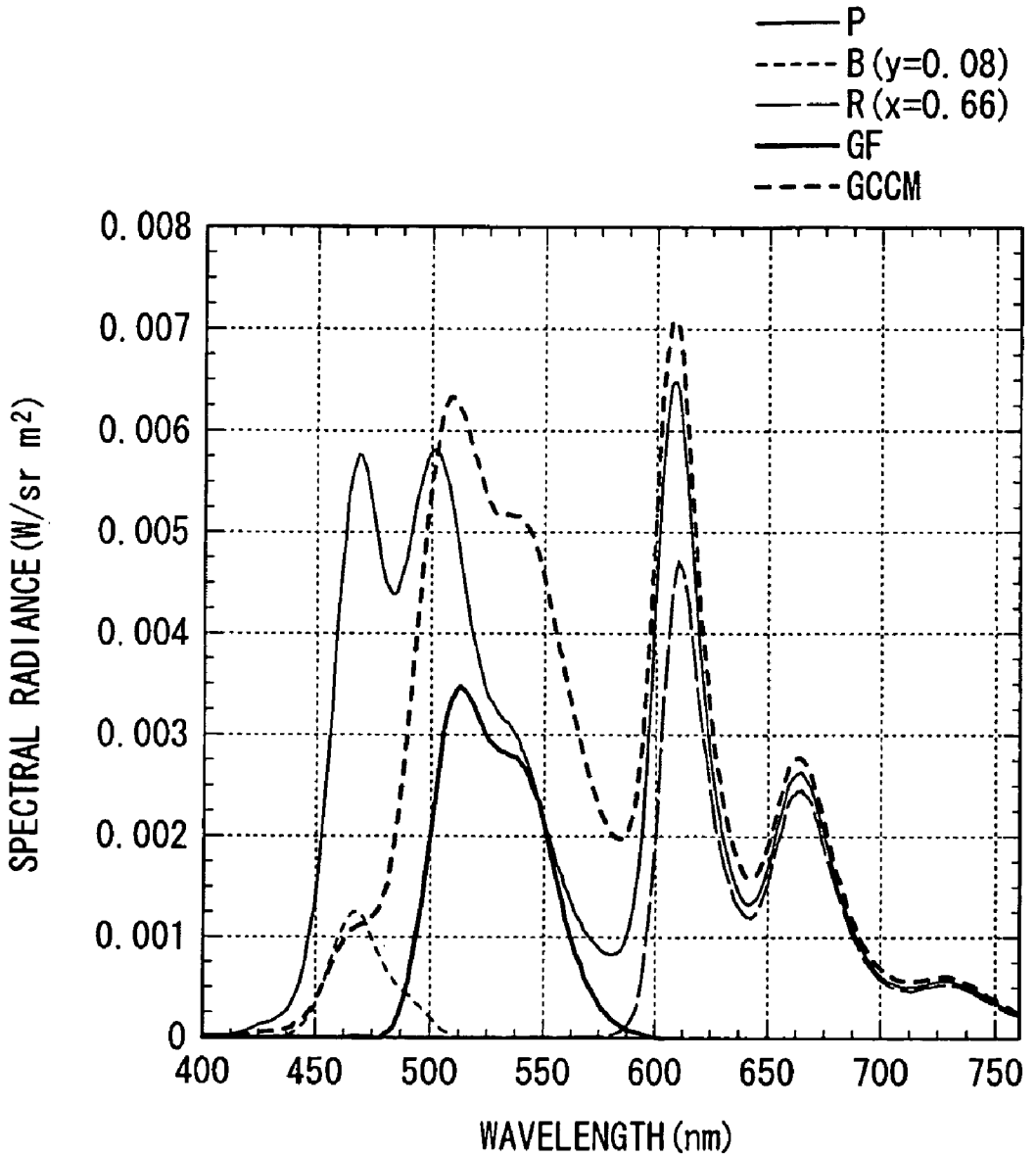
P
B (y=0. 08)
R (x=0. 66)
GF
GCCM
0. 008
0. 007
0. 006
0. 005
0. 004
0. 003
0. 002
0. 001
0
SPECTRAL RADIANCE (W/sr m2)
400
450
500
550
600
650
700
750
WAVELENGTH (nm)

FIG. 17

DISPLAY DEVICE, DISPLAY UNIT, AND IMAGING DEVICE

BACKGROUND OF THE INVENTION

[0001] 1. Field of the Invention

[0002] The present invention relates to a display device comprising a light emitting device such as an organic light emitting device, a display unit constructed from this display device, and an imaging device consisting of a combination of a display portion constructed from this display device and an imaging portion.

[0003] 2. Description of the Related Art

[0004] As one of flat panel displays, an organic light emitting display using an organic light emitting device (organic EL (Electroluminescence) device) has been recently noted. The organic light emitting display has characteristics that its visual field angle is wide and its power consumption is low since it is a self-light emitting type display. The organic light emitting display is also thought of as a display having sufficient response to high-definition and high-speed video signals, and is under development toward the practical use.

[0005] As the organic light emitting device, for example, an organic light emitting device, wherein a first electrode, an organic layer including a light emitting layer, and a second electrode are sequentially layered over a substrate is known. In order to apply this device to a full color display, it is necessary to form fine pixel for emitting light of red, blue, and green, the three primary colors. As a method to form such pixel, method for individually coloring the pixel of the three primary colors by using a deposition mask, method for combining a white light emitting device and a color filter, method for combining a blue light emitting device and a fluorescence conversion layer (fluorescence conversion method) and the like can be cited.

[0006] In the white color filter method, there is a light loss when color separation is performed by the color filter. In general, the color filter cannot sharply cut a target wavelength, and has broad transmission characteristics. Therefore, for example, since wavelength bands of blue and green are close to each other, separation is difficult. In order to perfectly separate blue, a color filter having a high density is necessary, and transmittance of the color filter should be lowered.

[0007] In the fluorescence conversion method, conversion efficiency from the blue light emitting device to red is low. One of the reasons thereof is that while an excitation light source (EL light emission) is blue, an absorption wavelength band of a red conversion layer exists in the vicinity of orange. A method for resolving this problem by increasing overlap of excitation light and the absorption wavelength band is recently suggested. This method uses an EL spectrum, wherein a yellow light emitting component is added to the original blue light emission. Thereby, a red element from the yellow light emission is added to the red light emission from the fluorescence conversion layer with the improved conversion efficiency, and intensity of the red light emission is improved as a whole.

[0008] However, in this method, there is a problem that the yellow light emitting component added for the overlap becomes a cause to lower color purity when blue, red, and green are separated by the color filter. When the color purity is tried to be raised, it cannot be avoided that efficiency is further lowered. For example, in the case of red, a color filter for sufficiently cutting the yellow light emitting component is required to raise the color purity. Similarly, in the case of green, the yellow light emitting component close to green needs to be cut by a color filter having a sufficient density, leading to lowering transmittance of the color filter.

[0009] As above, in order to perform color separation into red, green, and blue light having good color purity by the color filter by using the EL spectrum having intensity also for the wavelength band slightly shifted from red, green, and blue, a color filter having a higher density is required. The reason thereof is that practical color filter characteristics are broad transmission characteristics centering on red, green, and blue. As a result, as long as the color separation is performed by the color filter, it is not avoidable that the transmittance of the color filter is lowered when a light emitting component other than desired red, green, and blue is included in the EL spectrum, leading to lowering total efficiency.

[0010] In this method, the conversion efficiency of red is still low. Therefore, a thick red fluorescence conversion layer is required, and therefore steps cannot be simplified.

SUMMARY OF THE INVENTION

[0011] In light of the foregoing, it is an object of the invention to provide a display device having high efficiency and superior color reproduction capable of improving color separation characteristics by using a color filter having high transmittance, a display unit comprising this display device, and an imaging device comprising a display portion constructed from this display device.

[0012] The display device according to the invention includes: a light emitting device for emitting blue light, red light, and green light, the emission intensity of the green light is relatively lower than those of the blue light and the red light; a color filter provided to face the light emitting device, which has three filter layers corresponding to three colors, blue, red, and green; and a green fluorescence conversion layer provided between the light emitting device and the green filter layer of the color filter, which absorbs blue light and emits green light.

[0013] According to the display device of the invention or the display unit of the invention, the intensity of the green light emission in the light emitting device is set to relatively lower than those of blue light and red light, and thereby the green light emitting component causing decrease of color purity in color separation for blue and red in the color filter is decreased. Therefore, it becomes possible to improve the color purity of blue and red by using a color filter having high transmittance and low density. Consequently, efficiency of color separation of blue and red can be improved.

[0014] Other and further objects, features and advantages of the invention will appear from the following description.

BRIEF DESCRIPTION OF THE DRAWINGS

[0015] **FIG. 1** is a cross section showing a construction of a display device according to a first embodiment of the invention;

[0016] **FIG. 2** is a cross section showing a construction of an organic light emitting device shown in **FIG. 1**;

[0017] **FIG. 3** is a cross section showing a construction of a light emitting layer shown in **FIG. 2**;

[0018] **FIG. 4** is a view showing a relation between transmittance (density) of a color filter required for obtaining blue (chromaticity y=0.08) and red (chromaticity x=0.67) and emission intensity ratio r, along with luminance of red and blue;

[0019] **FIG. 5** is a block diagram showing a construction of a measurement system used for measurement of **FIG. 4**;

[0020] **FIG. 6** is a view showing spectrums used for the measurement of **FIG. 4**;

[0021] **FIG. 7** is a view showing transmission characteristics of the color filter used for the measurement of **FIG. 4**;

[0022] **FIG. 8** is a cross section showing a construction of a display device according to a second embodiment of the invention;

[0023] **FIG. 9** is a cross section showing a construction of a blue organic layer shown in **FIG. 8**;

[0024] **FIG. 10** is a cross section showing a construction of a red organic layer shown in **FIG. 8**;

[0025] **FIG. 11** is a cross section showing a construction of a display device according to a third embodiment of the invention;

[0026] **FIG. 12** is a perspective view showing an appearance of an imaging device according to a fourth embodiment of the invention;

[0027] **FIG. 13** is a block diagram showing a construction of the imaging device shown in **FIG. 12**;

[0028] **FIG. 14** is a view showing spectrums of a display device of Example 1 of the invention;

[0029] **FIG. 15** is a view showing spectrums of a display device of Comparative example 1 of the invention;

[0030] **FIG. 16** is a view showing spectrums of a display device of Comparative example 2 of the invention; and

[0031] **FIG. 17** is a view showing spectrums of a display device of Comparative example 3 of the invention.

DETAILED DESCRIPTION OF THE PREFERRED EMBODIMENTS

[0032] Embodiments of the invention will be hereinafter described in detail with reference to the drawings.

First Embodiment

[0033] **FIG. 1** shows a cross sectional structure of a display device according to a first embodiment of the invention. The display device is used for a thin organic light emitting display unit or the like. For example, a driving panel **10** and a sealing panel **20** are arranged oppositely, and their whole faces are bonded together by an adhesive layer **30**. The driving panel **10** has an organic light emitting device **10**M of multicolor light emission for emitting blue, red, and green light, or of white light emission on a driving substrate **11** made of an insulating material such as glass. The sealing panel **20** has a color filter **22** including three types of filter layers **22**B, **22**R, and **22**G of blue, red, and green, on a sealing substrate **21** made of a material such as glass transparent to light generated in the organic light emitting device **10**M.

[0034] It is preferable that in the organic light emitting device **10**M, the emission intensity of blue band and red band are 20% or more of the visible light region (wavelength: 420 nm to 680 nm). Thereby, required intensity of red can be obtained by emitting red light having sufficient intensity by only EL light emission in the organic light emitting device **10**M. Further, a conventional red conversion layer having bad conversion efficiency becomes unnecessary, and manufacturing process can be simplified.

[0035] **FIG. 2** shows an example of a construction of the organic light emitting device **10**M. The organic light emitting device **10**M, for example, has a structure, wherein a first electrode **12** as an anode, an organic layer **13**, and a second electrode **14** as a cathode are layered in this order from the driving substrate **11** side. A protective film (not shown) is formed on the second electrode **14** according to needs.

[0036] The first electrode **12**, for example, has a structure, wherein a reflective layer **12**A for reflecting light generated in a light emitting layer and a first transparent electrode **12**B transparent to the light generated in the light emitting layer are layered in this order from the driving substrate **11** side. The light generated in the organic light emitting device **10**M is reflected by the reflective layer **12**A to the color filter **22** side. It is desirable that the reflective layer **12**A has high reflectivity as much as possible in order to improve light emitting efficiency. A thickness in the lamination direction (hereinafter simply referred to as thickness) of the reflective layer **12**A is, for example, about 50 nm. The reflective layer **12**A is made of a simple substance or an alloy of metal elements such as platinum (Pt), gold (Au), silver (Ag), chromium (Cr), and tungsten (W). The first transparent electrode **12**B is intended to improve efficiency to inject electron holes into the organic layer **13**. The first transparent electrode **12**B, is, for example, about 20 nm thick, and is made of a conductive material sufficiently transparent to the light generated in the light emitting layer, such as ITO (Indium Tin Oxide). The first electrode **12** can be constructed from several layers, or can be constructed from a single layer.

[0037] The organic layer **13** has a structure, wherein an electron hole injection layer **13**A, an electron hole transport layer **13**B, a light emitting layer **13**C, an electron transport layer **13**D, and an electron injection layer **13**E are layered in this order from the first electrode **12** side. The electron hole injection layer **13**A and the electron hole transport layer **13**B are intended to improve efficiency to inject electron holes into the light emitting layer **13**C. The light emitting layer **13**C is intended to generate light by current injection. The electron transport layer **13**D and the electron injection layer **13**E are intended to improve efficiency to inject electrons into the light emitting layer **13**C.

[0038] The electron hole injection layer **13**A is, for example, about 20 nm thick, and is made of 4,4',4"-tris(3-methylphenyl phenylamino)triphenylamine (m-MTDATA). The electron hole transport layer **13**B is, for example, about 10 nm thick, and is made of bis [(N-naphthyl)-N-phenyl] benzidine (α-NPD).

[0039] **FIG. 3** shows an enlarged view of a construction of the light emitting layer **13**C. The light emitting layer **13**C,

for example, has a structure, wherein a light emitting layer **13**CB for emitting blue light and a red light emitting layer **13**CR for emitting red light are layered in this order from the first electrode **12** side. The blue light emitting layer **13**CB is, for example, about 15 nm thick, and is made of a mixture, wherein 5 volume % of BCzVBi(4,4'-bis(3-carbazolylvinyl-)biphenyl is mixed into 4,4'-bis(2,2'-diphenylvinyl) biphenyl (DPVBi). The red light emitting layer **13**CR is, for example, about 10 nm thick, and is made of 2,6-bis[(4'-methoxy diphenylamino)styryl]-1,5-dicianonaphthalene (BSN).

[**0040**] The electron transport layer **13**D shown in **FIG. 2** is, for example, about 30 nm thick, and is made of DPVBi. The electron injection layer **13**E shown in **FIG. 2** is, for example, about 10 nm thick, and is made of 8-hydroxyquinoline aluminum (Alq_3).

[**0041**] The second electrode **14** shown in **FIG. 2**, for example, has a structure, wherein a buffer layer **14**A for improving efficiency to inject electrons into the organic layer **13**, an ultrathin transmissive metal electrode **14**B transparent to the light generated in the light emitting layer **13**C, and a second transparent electrode **14**C transparent to the light generated in the light emitting layer **13**C are layered in this order from the organic layer **13** side. The buffer layer **14**A is, for example, about 0.3 nm thick, and is made of lithium fluoride (LiF). The ultrathin transmissive metal electrode **14**B is, for example, about 1 nm thick, and is made of a metal or an alloy such as silver (Ag), aluminum (Al), magnesium (Mg), calcium (Ca), and sodium (Na). As an alloy material, for example, alloy of magnesium (Mg) and silver (MgAg alloy) is preferable. The second transparent electrode **14**C is intended to lower an electric resistance of the ultrathin transmissive metal electrode **14**B. The second transparent electrode **14**C is, for example, about 100 nm thick, and is made of a conductive material sufficiently transparent to the light generated in the light emitting layer such as ITO.

[**0042**] The sealing substrate **21** shown in **FIG. 1** is located on the organic light emitting device **10**M side of the driving panel **10**, and seals the organic light emitting device **10**M with the adhesive layer **30**. The filter layers **22**B, **22**R, and **22**G of the color filter **22** are respectively made of resins mixed with pigments. Adjustment is made so that light transmittance in a target wavelength band of red, green, or blue is high and light transmittance in other wavelength bands is low by selecting pigments. The color filter **22** can be provided on either side of the sealing substrate **21** as long as the color filter **22** is provided in the position facing the organic light emitting device **10**M. However, it is preferable that the color filter **22** is provided on the driving panel **10** side, since the color filter **22** is not exposed on the surface and can be protected by the adhesive layer **30**.

[**0043**] It is preferable that in the color filter **22**, transmittance of respective wavelength components of 455 nm and 630 nm, that is, transmittance of blue and red is 70% or more. The reason thereof is that a loss associated with color separation can be decreased, and light extraction efficiency and luminance can be improved.

[**0044**] The adhesive layer **30** shown in **FIG. 1** is preferably made of a thermosetting resin, thermosetting and ultraviolet-curing resin or the like. It is difficult to cure a resin by only ultraviolet irradiation, since the ultraviolet is absorbed by the color filter **22** formed on the sealing panel **20**.

[**0045**] Further, the organic light emitting device **10**M emits green light at intensity relatively lower than of blue and red, and is provided with a green fluorescence conversion layer **23** for absorbing a blue wavelength component and emitting green light between the organic light emitting device **10**M and the green filter layer **22**G as shown in **FIG. 1**. Thereby, in the display device, it is possible to decrease a green light emitting component causing lowering color purity when blue and red are separated, and improve the color purity of blue and red by using the color filter **22** having high transmittance and a low density. In addition, it is possible to complement the decreased green light emitting component with the green fluorescence conversion layer **23**, adjust chromaticity by the green filter layer **22**G, and improve light emitting efficiency and color reproducibility.

[**0046**] The green fluorescence conversion layer **23** is, for example, about 20 μm, and is made of a mixture, wherein 1 volume % of coumarin 6 is mixed into DPVBi.

[**0047**] Specifically, it is preferable that in the organic light emitting device **10**M, emission intensity ratio r shown in Mathematical formula 2 is from 0.1 to 0.45.

$$\text{Emission Intensity Ratio } r = A/B \qquad \text{(Mathematical formula 2)}$$

[**0048**] In Mathematical formula 2, A represents a value obtained by integrating emission intensity of wavelengths from 480 nm to 590 nm in the spectrum of the organic light emitting device **10**M, and B represents a value obtained by integrating emission intensity of wavelengths from 420 nm to 680 nm in the spectrum of the organic light emitting device **10**M, respectively.

[**0049**] **FIG. 4** shows a relation between transmittance (density) of the color filter required for obtaining blue (chromaticity y=0.08) and red (chromaticity x=0.67) and the emission intensity ratio r, along with luminance of red and blue. **FIG. 4** is a result of a measurement performed by constructing a measurement system as shown in **FIG. 5**. This measurement system is intended to measure a spectrum after color separation. In this measurement system, a red organic light emitting device **100**R for emitting red light, a blue organic light emitting device **100**B for emitting blue light, and a green organic light emitting device **100**G for emitting green light are layered and arranged between a reflective plate **110** and a color filter **120**, and a measuring instrument **130** is arranged on the opposite side of the color filter **120** from these organic light emitting devices. Though not shown, the red organic light emitting device **100**R, the green organic light emitting device **100**G, and the blue organic light emitting device **100**B are transparent devices, wherein an organic layer including a light emitting layer is sandwiched between a transparent anode and a transparent cathode respectively made of ITO. Respective light emitting colors are set to be different from each other by changing constructions and materials of the organic layers of the respective devices.

[**0050**] As measurement conditions, a current density applied to the red organic light emitting device **100**R and the blue organic light emitting device **100**B is fixed to 1 mA/cm^2, and a current density applied to the green organic light emitting device **100**G is changed, and thereby emission intensity of green in the spectrum entering the color filter **120** is changed as shown in **FIG. 6** and thereby the emission intensity ratio r is changed. Regarding each spectrum shown

in **FIG. 6**, necessary degrees of the transmittance (density) of the color filter **120** to obtain blue (chromaticity y=0.08) and red (chromaticity x=0.67) are respectively measured. As the color filter **120**, a color filter with transparency characteristics shown in **FIG. 7** is used. Target wavelengths are set to 630 nm for red and 455 nm for blue. The transmittance, that is strength as a filter is changed by changing thicknesses. In **FIG. 6**, only the spectrum having a current density of −0.1 mA/cm^2 is obtained by composition with calculation of subtracting from the value of a current density of 0.1 mA/cm^2.

[**0051**] As evidenced by **FIG. 4**, first, focusing attention on blue, in the case of the emission intensity ratio r=0.45, the color filter having transmittance of about 55% should be used, and the obtainable luminance is 13 cd/m^2. When r is 0.45 or more, no change is shown. However, the smaller r is (the weaker green is), the lower the density of the required color filter can be, while the luminance is concurrently increased. From the foregoing, it is evident that though the emission intensity of blue of the original spectrum is totally identical as shown in **FIG. 6**, the luminance of blue after color separation is varied according to a ratio of the green light emitting component included in the spectrum, that is the emission intensity ratio r. Meanwhile, in the case of red, it is evident that the luminance after color separation is not much decreased even when the emission intensity ratio r is changed, and the color filter having transmittance of 80% or more can be always used. That is, when the emission intensity ratio r is set to 0.45 or less, the color filter having high transmittance can be used, color purity of blue can be increased, and decrease of luminance of blue after blue is separated can be small.

[**0052**] It is thinkable that such difference of color separation between blue and red is caused by transmission characteristics of the color filter. As evidenced by **FIG. 7**, while red can cut the short wavelength component relatively steeply, blue cannot cut the long wavelength component steeply. Therefore, when desired chromaticity is obtained, in the case of blue (a small value such as y=0.08 is preferable), if a wavelength component of 480 nm or more which increases the value of y is included a great deal in the EL light, such a wavelength component should be cut by increasing the density of the color filter. In the result, required transmittance in the vicinity of 455 nm is concurrently decreased. Meanwhile, in the case of red, since the green element can be cut steeply, it is not necessary to increase the density of the color filter even if the emission intensity ratio r is changed.

[**0053**] The emission intensity ratio r can be zero in theory, but is preferably 0.1 or more. As shown in **FIG. 6**, it is evident that even when the current density of the green organic light emitting device **100**G is set to 0.0 mA/cm^2 (emission intensity ratio r=0.25), and only the blue organic light emitting device **100**B and the red organic light emitting device **100**R emit light, the emission intensity of green does not become zero.

[**0054**] This display device, can be, for example, manufactured as below.

[**0055**] First, the first electrode **12**, the organic layer **13**, and the second electrode **14** made of the foregoing materials having the foregoing thicknesses are sequentially deposited over the driving substrate **11** made of the foregoing material by vacuum deposition method, sputtering method or the like. Then, in the case of the vacuum deposition, the pressure is set to 1E^{-4} Pa, and deposition is made by resistive heating method. Further, the first transparent electrode **12**B and the second transparent electrode **14**C respectively made of ITO are deposited by, for example, DC magnetron sputtering method. As deposition conditions thereof, for example, argon (Ar) gas, wherein 1% of oxygen (O_2) is mixed is used as sputtering gas, a flow rate is set to 5 sccm, a pressure is set to 0.3 Pa, and an output is set to 150 W. Thereby, the driving panel **10** having the organic light emitting device **10**M shown in **FIG. 1** is formed.

[**0056**] Next, the filter layers **22**B, **22**R, and **22**G of the color filter **22** are sequentially formed on the sealing substrate **21** made of the foregoing material by, for example, spin coat method, photolithography technique, printing method, vacuum deposition, sputtering method, ink jet coating method or the like. Subsequently, the green fluorescence conversion layer **23** made of the foregoing material having the foregoing thickness is formed on the green filter layer **22**G by, for example, spin coat method and photolithography technique, printing method, vacuum deposition, sputtering method, ink jet coating method or the like. Thereby, the sealing panel **20** is formed.

[**0057**] After that, the adhesive layer **30** made of the foregoing material is formed by coating on the side of the driving panel **10** where organic light emitting device **10**M is formed. Coating can be performed, for example, by discharging a resin from a slit nozzle type dispenser, by roll coating, or by screen printing. Subsequently, as shown in **FIG. 1**, the driving panel **10** and the sealing panel **20** are bonded together with the adhesive layer **30** in between. Then, a face of the sealing panel **20** where the color filter **22** is formed is preferably arranged facing the driving panel **10**. Further, it is preferable that air bubbles or the like do not mix in the adhesive layer **30**. After that, relative positions of the color filter **22** of the sealing panel **20** and the organic light emitting device **10**M of the driving panel **10** are aligned, and then the adhesive layer **30** is cured. Consequently, the display device shown in FIGS. **1** to **3** is completed.

[**0058**] In this display device, when a given voltage is applied between the first electrode **12** and the second electrode **14**, a current is injected into the red light emitting layer **13**CR and the blue light emitting layer **13**CB of the organic layer **13**, and an electron hole and an electron recombine, and thereby red light is generated in the red light emitting layer **13**CR and blue light is generated in the blue light emitting layer **13**CB, and these red and blue light pass through the second electrode **14**, the adhesive layer **30**, and the sealing panel **20** and extracted. Here, the organic light emitting device **10**M emits green light at intensity relatively lower than blue light and red light. Therefore, the green light emitting component causing decrease of color purity when color separation for blue and red is performed in the color filter **22** becomes decreased. In the result, even if the color filter **22** having high transmittance and low density is used, high color purity can be obtained, and color separation characteristics of blue and red are improved. Further, the decreased green light emitting component is complemented with the green fluorescence conversion layer **23**, and chromaticity is adjusted by the green filter layer **22**G.

[**0059**] As above, in this embodiment, EL light emission of green in the organic light emitting device **10**M has intensity

relatively lower than blue and red. Therefore, it becomes possible that the green EL light emitting component causing decrease of color purity when color separation for blue and red is performed in the color filter **22** is decreased, and the color filter **22** having high transmittance and low density is used to improve color purity of blue and red. Further, efficiency of color separation of blue and red can be improved. In particular, it is effective for blue, since transmission characteristics of the color filter of blue are not idealistic. Further, energy of the decreased green EL light emitting component is distributed to blue and red. Therefore, total efficiency can be improved by concurrently using the color filter **22** having high transmittance. Further, regarding green, the green fluorescence conversion layer **23** for absorbing the wavelength component of blue and emitting green light is provided between the organic light emitting device **10**M and the green filter layer **22**G of the color filter. Therefore, the decreased green EL light emitting component can be complemented with the green fluorescence conversion layer **23**, and chromaticity can be adjusted by the green filter layer **22**G. Since the green fluorescence conversion layer **23** has high conversion efficiency, luminance of green can be also improved. Consequently, the display device having high efficiency and superior color reproducibility can be constructed. In addition, as conventional display devices, a sufficient length of luminance half period, the characteristics for multi light emission or white light emission can be maintained, and the longer lasting display device can be obtained. Further, deterioration of the green fluorescence conversion layer **23** is small, which can be ignored.

Second Embodiment

[**0060**] **FIG. 8** shows a construction of an organic light emitting device of a display device according to a second embodiment of the invention. This display device is identical with the display device described in the first embodiment except that this display device comprises a so-called tandem organic light emitting device, wherein the first electrode **12**, a blue organic layer **13**B including a blue light emitting layer, an intermediate electrode **15**, a red organic layer **13**R including a red light emitting layer, and the second electrode **14** are layered in this order from the driving substrate **11** side on the driving substrate **11**. Therefore, descriptions will be given by applying the same symbols to the same components.

[**0061**] The tandem organic light emitting device is electrically equal to a combination, wherein a red organic light emitting device and a blue organic light emitting device are connected in series. Therefore, light emitting efficiency per current is twice as high as general efficiency. However, its driving voltage is also twice as high as a general driving voltage, and therefore efficiency per power is not changed. However, since a driving current value can be reduced by half and thereby a luminance half period becomes long, this tandem organic light emitting device currently attracts attention.

[**0062**] The blue organic layer **13**B, for example, as shown in **FIG. 9**, has a structure, wherein an electron hole injection layer **13**BA, an electron hole transport layer **13**BB, a blue light emitting layer **13**BC, and an electron injection layer **13**BE are layered in this order from the first electrode **12** side. The electron hole injection layer **13**BA is, for example, about 20 nm thick, and is made of m-MTDATA. The electron hole transport layer **13**BB is, for example, about 10 nm thick, and is made of α-NPD. The blue light emitting layer **13**BC is, for example, about 20 nm thick, and is made of a mixture, wherein 5 volume % of BCzVBi is mixed into DPVBi. The electron injection layer **13**BE is, for example, about 8 nm thick, and is made of Alq_3.

[**0063**] The intermediate electrode **15**, for example, similarly to the second electrode **14**, has a structure, wherein the buffer layer **14**A, the ultrathin transmissive metal electrode **14**B, the second transparent electrode **14**C are layered in this order from the blue organic layer **13**B side. The buffer layer **14**A and the ultrathin transmissive metal electrode **14**B are constructed as in the second electrode **14**. The second transparent electrode **14**C is constructed as in the second electrode **14**, except that the thickness is, for example, about 10 nm.

[**0064**] The red organic layer **13**R, for example, as shown in **FIG. 10**, has a structure, wherein an electron hole transport layer **13**RB, a red light emitting layer **13**RC, and an electron injection layer **13**RE are layered in this order from the first electrode **12** side. The electron hole transport layer **13**RB is, for example, about 10 nm thick, and is made of α-NPD. The red light emitting layer **13**RC is, for example, about 20 nm thick, and is made of BSN. The electron injection layer **13**RE is, for example, about 8 nm thick, and is made of Alq_3.

[**0065**] This display device can be manufactured as in the first embodiment. Operations and effects thereof are similar to of the first embodiment.

Third Embodiment

[**0066**] **FIG. 11** shows a cross sectional structure of a display device according to a third embodiment of the invention. This display device is identical with the display device described in the first embodiment, except that this display device has a filter layer **22**C of cyan in addition to the filter layers **22**B, **22**R, and **22**G of three colors, blue, red, and green, and comprises a cyan fluorescence conversion layer **24** between the organic light emitting device **10**M and the filter layer **22**C of cyan. Therefore, the same symbols are applied to the same components, and descriptions thereof will be omitted.

[**0067**] The cyan fluorescence conversion layer **24** is intended to absorb a blue wavelength component and emit cyan light. The filter layer **22**C of cyan is intended to adjust chromaticity of light which is converted into cyan by the cyan fluorescence conversion layer **24**, and is made of a resin mixed with a pigment as in the filter layers **22**B, **22**R, and **22**G. In this display device, since the filter layer **22**C of cyan and the cyan fluorescence conversion layer **24** are provided, four primary color display of red, green, blue, and cyan is enabled, and color reproducibility and expressivity as a display unit can be improved facing up to the future high-definition display.

[**0068**] This display device can be manufactured as in the first embodiment, except that in a step of forming the sealing panel **20**, the filter layer **22**C of cyan is formed on the sealing substrate **21** in addition to the filter layers **22**B, **22**R, and **22**G, and the cyan fluorescence conversion layer **24** is formed on the filter layer **22**C of cyan by, for example, spin coat method and photolithography technique, printing method, vacuum deposition, sputtering method, ink jet coating method or the like.

[0069] In this display device, for example, as in the first embodiment, when a given voltage is applied between the first electrode **12** and the second electrode **14**, a current is injected into the red light emitting layer **13**CR and the blue light emitting layer **13**CB of the organic layer **13**, and an electron hole and an electron recombine, and thereby red light is generated in the red light emitting layer **13**CR and blue light is generated in the blue light emitting layer **13**CB, and these red and blue light pass through the second electrode **14**, the adhesive layer **30**, and the sealing panel **20** and extracted. Here, since the filter layer **22**C of cyan and the cyan fluorescence conversion layer **24** are provided, part of blue light is absorbed into the cyan fluorescence conversion layer **24** and then converted to cyan, chromaticity is adjusted by the filter layer **22**C of cyan, and thereby four primary color display of blue, red, green, and cyan is performed. Since this cyan is obtained by fluorescence conversion, color separation of the blue component is not affected thereby.

[0070] This embodiment is provided with the filter layer **22**C of cyan in addition to the filter layers **22**B, **22**R, and **22**G of three colors, and comprises the cyan fluorescence conversion layer **24**. Therefore, in addition to the effects of the first embodiment, four primary color display of red, green, blue, and cyan can be performed, and color reproducibility and expressivity as a display unit can be improved facing up to the future high-definition display. Further, since this cyan is obtained by the fluorescence conversion, color separation of the blue component is not affected thereby. The filter layer **22**C of cyan and the cyan fluorescence conversion layer **24** can be easily formed by photo process without using mask deposition. Therefore, the four primary color display can be easily realized by simplified steps.

Fourth Embodiment

[0071] **FIG. 12** shows an appearance of an imaging device according to the invention. **FIG. 13** shows an outline construction of this imaging device. This imaging device is used as, for example, a digital still camera. The imaging device includes an imaging portion **40** for shooting an image, and a display portion **50** for displaying the image shot by the imaging portion **40**. The imaging portion **40** and the display portion **50** are connected with a wire or without wire.

[0072] The imaging portion **40** comprises a lens (not shown) and an image sensor part (not shown) constructed from a charge transfer type CCD (Charge Coupled Device) image sensor, a CMOS (Complementary Metal Oxide Semiconductor) image sensor for reading by addressing X-Y or the like. The image sensor part is capable of four primary color imaging of blue, red, green, and cyan.

[0073] The display portion **50** is constructed from, for example, an organic light emitting display unit comprising the display device having the filter layer **22**C of cyan and the cyan fluorescence conversion layer **24** described in the third embodiment for every pixel. Thereby, in this imaging device, the image, which is four-primary-color-imaged by the imaging portion **40** can be truly reproduced on the display portion **50** with four primary color display and good color reproducibility, and expressivity can be improved.

[0074] As above, in this embodiment, the imaging device comprises the display portion **50** constructed from the display device of the invention. Therefore, the image imaged by the imaging portion **40** can be truly reproduced with good color reproducibility, and expressivity can be improved.

[0075] In this embodiment, the display portion **50** can be constructed from an organic light emitting display unit comprising the display device described in the first embodiment or the second embodiment for every pixel.

EXAMPLES

[0076] Further, specific examples of the invention will be hereinafter described in detail.

Example 1

[0077] A display device was fabricated as in the first embodiment. First, the organic light emitting device **10**M, wherein the first electrode **12**, the organic layer **13**, and the second electrode **14** were sequentially layered was fabricated on the driving substrate **11** made of glass. Then, the first electrode **12** had a construction, wherein the reflective layer **12**A made of chromium (Cr) being 50 nm thick and the first transparent electrode **12**B made of ITO being 20 nm thick were sequentially layered from the driving substrate **11** side. The organic layer **13** had a construction, wherein, the electron hole injection layer **13**A made of m-MTDATA being 20 nm thick, the electron hole transport layer **13**B made of α-NPD being 10 nm thick, the blue light emitting layer **13**CB made of a mixture, wherein 5 volume % of BCzVBi was mixed into DPVBi being 15 nm thick, the red light emitting layer **13**CR made of BSN being 10 nm thick, the electron transport layer **13**D made of DPVBi being 30 nm thick, and the electron injection layer **13**E made of Alq_3 being 10 nm thick were sequentially layered from the first electrode **12** side. The second electrode **14** had a construction, wherein the buffer layer **14**A made of lithium fluoride (LiF) being 0.3 nm thick, the ultrathin transmissive metal electrode **14**B made of MgAg alloy being 1 nm thick, and the second transparent electrode **14**C made of ITO being 100 nm thick were sequentially layered from the organic layer **13** side. Next, the color filter **22** and the green fluorescence conversion layer **23** were formed on the sealing substrate **21**. The green fluorescence conversion layer **23** was 20 μm thick, and was made of a mixture, wherein 1 volume % of coumarin 6 was mixed into DPVBi.

[0078] Regarding the obtained organic light emitting device **10**M, a spectrum was measured. Measurement conditions were a current density of 1 mA/cm^2 and 4.5 V. The obtained spectrum P is shown in **FIG. 14**. Since this organic light emitting device **10**M generates only red and blue, pink light emission was obtained. When the emission intensity ratio r of this spectrum was obtained by Mathematical formula 2, r was 0.212.

[0079] Further, the blue filter layer **22**B was combined with the organic light emitting device **10**M to obtain chromaticity y=0.08. Spectrum B when transmittance of the blue filter layer **22**B was 85% is also shown in **FIG. 14**, and chromaticity coordinates and luminance are shown in Table 1.

TABLE 1

	Chromaticity coordinates		Luminance L
	X	Y	(cd/m^2)
B	0.134	0.080	24
G	0.202	0.710	110
R	0.670	0.300	30

[0080] Further, the red filter layer **22**R was combined with the organic light emitting device **10**M to obtain chromaticity x=0.67. Spectrum R when transmittance of the red filter layer **22**R was 85% is also shown in **FIG. 14**, and chromaticity coordinates and luminance are also shown in Table 1.

[0081] Further, spectrum GF when the green filter layer **22**G was combined with the organic light emitting device **10**M and green was extracted is also shown in **FIG. 14**. Further, spectrum GCCM when the green filter layer **22**G and the green fluorescence conversion layer **23** were combined with the organic light emitting device **10**M is also shown in **FIG. 14**, and chromaticity coordinates and luminance are also shown in Table 1.

[0082] When a luminance half period of this organic light emitting device **10** M was measured, 600 hr was obtained when a current density was 100 mA/cm^2 and average luminance in white was 6000 cd/m^2.

[0083] As evidenced by **FIG. 14** and Table 1, regarding the spectrums, the chromaticity, and the luminance of blue and red, good results could be obtained. Regarding green, in spite that the emission intensity ratio r was small, the sufficient luminance was obtained by high conversion efficiency of the green fluorescence conversion layer **23**. That is, it was found that when the emission intensity ratio r was set to 0.212 and intensity of the light emission of green was set to relatively lower than those of blue and red, and the green fluorescence conversion layer **23** was provided, color purity and luminance of blue and red could be improved by using the color filter **22** having high transmittance and low density, and the decreased green light emitting component could be complemented with the green fluorescence conversion layer **23** and chromaticity could be adjusted by the green filter layer **22**G.

Example 2

[0084] A display device was fabricated as in the second embodiment. The tandem organic light emitting device **10**M, wherein the first electrode **12**, the blue organic layer **13**B including the blue light emitting layer **13**BC, the intermediate electrode **15**, the red organic layer **13**R including the red light emitting layer **13**RC, and the second electrode **14** were sequentially layered from the driving substrate **11** side was formed on the driving substrate **11**. Then, the blue organic layer **13**B had a construction, wherein the electron hole injection layer **13**BA made of m-MTDATA being 20 nm thick, the electron hole transport layer **13**BB made of α-NPD being 10 nm thick, the blue light emitting layer **13**BC made of a mixture, wherein 5 volume % of BCzVBi was mixed into DPVBi being 20 nm thick, and the electron injection layer **13**BE made of Alq_3 being 8 nm thick were sequentially layered from the first electrode **12** side. The intermediate electrode **15** was constructed as in the second electrode **14**, except that the second transparent electrode **14**C was 10 nm thick. The red organic layer **13**R had a construction, wherein the electron hole transport layer **13**RB made of α-NPD being 10 nm thick, the red light emitting layer **13**RC made of BSN being 20 nm thick, and the electron injection layer **13**RE made of Alq_3 being 8 nm thick were sequentially layered from the intermediate electrode **15** side. The first electrode **12** and the second electrode **14** were constructed as in Example 1. Next, the color filter **22** and the green fluorescence conversion layer **23** were formed on the sealing substrate **21** as in Example 1.

[0085] Regarding the obtained organic light emitting device **10**M, a spectrum was measured, and a result as in Example 1 was obtained. Measurement conditions were a current density of 1 mA/cm^2 and 9.0 V. Emission intensity then was about twice as large as of Example 1. Further, when the emission intensity ratio r of this spectrum was obtained by Mathematical formula 2, r was 0.252.

[0086] Further, the blue filter layer **22**B was combined with the organic light emitting device **10**M to obtain chromaticity y=0.08. When transmittance of the blue filter layer **22**B was 82%, spectrum B as in Example 1 was obtained.

[0087] Further, the red filter layer **22**R was combined with the organic light emitting device **10**M to obtain chromaticity x=0.67. Transmittance of the red filter layer **22**R then was 82%.

[0088] Further, spectrum GF when the green filter layer **22**G was combined with the organic light emitting device **10**M and green was extracted, and spectrum GCCM when the green filter layer **22**G and the green fluorescence conversion layer **23** were combined with the organic light emitting device **10**M were respectively measured. Then, results as in Example 1 were obtained.

[0089] When chromaticity of this organic light emitting device **10**M was measured, results equal to of Example 1 were obtained for all colors. Luminance under the conditions of a current density of 1 mA/cm^2 and 9.0 V was 45 cd/m^2 for blue, 210 cd/m^2 for green, and 65 cd/m^2 for red. That is, efficiency per current became twice as high as in Example 1.

[0090] Further, when an luminance half period of this organic light emitting device **10**M was measured, 1000 hr was obtained when a current density was 55 mA/cm^2 and average luminance in white was 6000 cd/m^2.

[0091] As evidenced by the foregoing results, regarding the spectrums, the chromaticity, and the luminance, good results were obtained in Example 2 as in Example 1. That is, it was found that when the emission intensity ratio r was set to 0.252 and intensity of light emission of green was set to relatively lower than of blue and red, and the green fluorescence conversion layer **23** was provided, color purity and luminance of blue and red could be improved by using the color filter **22** having high transmittance and low density, and the decreased green light emitting component could be complemented with the green fluorescence conversion layer **23** and chromaticity could be adjusted by the green filter layer **22**G. Further, since the organic light emitting device **10**M had the tandem structure, even if the initial luminance was the same, the current value could be reduced and the luminance half period could be expanded.

Comparative Example 1

[0092] A display device was fabricated as in Example 1, except that the green fluorescence conversion layer was not provided. Regarding an obtained organic light emitting device, a spectrum was measured. Further, as in Example 1, blue, red, and green were separated, and respective spectrums, chromaticity, and luminance were measured. These results are shown in **FIG. 15** and Table 2.

TABLE 2

	Chromaticity coordinates		Luminance L
	X	Y	(cd/m^2)
B	0.134	0.080	24
G	0.214	0.406	110
R	0.670	0.300	26

[0093] As evidenced by **FIG. 15** and Table 2, as in Example 1, regarding the spectrums, the chromaticity, and the luminance of blue and red, good results were obtained. However, sufficient chromaticity could not been obtained for green. It is thinkable that the reason thereof is that the green fluorescence conversion layer was not provided.

[0094] In the following Comparative examples 2 and 3, cases that the emission intensity ratio r was changed by changing constructions of the light emitting layer of the organic light emitting device.

Comparative Example 2

[0095] A display device was fabricated as in Example 1, except that the construction of the light emitting layer of the organic light emitting device was different. Then, the light emitting layer had a construction, wherein a blue light emitting layer made of a mixture, wherein 5 volume % of BCzVBi was mixed into DPVBi being 9 nm thick, a green light emitting layer made of a mixture, wherein 1 volume % of coumarin 6 was mixed into DPVBi being 3 nm thick, and a red light emitting layer made of BSN being 10 nm thick were sequentially layered from the first electrode side. That is, in this comparative example, a three band white organic light emitting device having each peak of R, G, and B was fabricated as an organic light emitting device.

[0096] Regarding the obtained organic light emitting device, a spectrum was measured. Measurement conditions were a current density of 1 mA/cm^2 and 5.2 V. The obtained spectrum W is shown in **FIG. 16**. Further, when the emission intensity ratio r of this spectrum was obtained by Mathematical formula 2, r was 0.516.

[0097] Further, a blue filter layer was combined with this organic light emitting device to obtain chromaticity y=0.08. Spectrum B when transmittance of the blue filter layer was 62% is also shown in **FIG. 16**, and chromaticity coordinates and luminance are shown in Table 3.

TABLE 3

	Chromaticity coordinates		Luminance L
	X	Y	(cd/m^2)
B	0.132	0.080	10
G	0.217	0.710	60
R	0.670	0.314	19

[0098] Further, a red filter layer was combined with this organic light emitting device to obtain chromaticity x=0.67. Spectrum R when transmittance of the red filter layer was 83% is also shown in **FIG. 16**, and the chromaticity coordinates and luminance are also shown in Table 3.

[0099] Further, spectrum GF when a green filter layer was combined with this organic light emitting device and green was extracted is also shown in **FIG. 16**. Transmittance of the filter layer was 53%. Further, chromaticity coordinates and luminance are also shown in Table 3.

[0100] As evidenced by **FIG. 16** and Table 3, the obtained luminance under a current value of 1 mA/cm^2 was only about half of in Example 1. The reason thereof was that since the spectrum W having the large emitting intensity ratio r, 0.516 was used, transmittance of the color filter was decreased. Another reason thereof was that light emitting energy was dispersed into three light emissions of red, green, and blue. That is, it was found that when the emission intensity ratio r was large, such as 0.516, a loss in color separation by the color filter was increased, and efficiency was decreased.

Comparative Example 3

[0101] A display device was fabricated as in Example 1, except that the construction of the light emitting layer of the organic light emitting device was different. Then, the light emitting layer had a construction, wherein a blue-green light emitting layer made of a mixture, wherein 5 volume % of PAVB was mixed into DPVBi being 15 nm thick, and a red light emitting layer made of BSN being 10 nm thick were sequentially layered from the first electrode side. That is, in this comparative example, the blue-green light emitting component included in a spectrum was increased compared to in Example 1.

[0102] Regarding the obtained organic light emitting device, a spectrum was measured. Measurement conditions were a current density of 1 mA/cm^2 and 4.9 V. The obtained spectrum P is shown in **FIG. 17**. Further, when the emission intensity ratio r of this spectrum was obtained by Mathematical formula 2, r was 0.457.

[0103] Further, a blue filter layer was combined with this organic light emitting device to obtain chromaticity y=0.08. Spectrum B when transmittance of the blue filter layer was 21% is also shown in **FIG. 17**, and chromaticity coordinates and luminance then are shown in Table 4.

TABLE 4

	Chromaticity coordinates		Luminance L
	X	Y	(cd/m^2)
B	0.124	0.080	1.6
G	0.200	0.710	48
R	0.670	0.326	20.9

[0104] Further, a red filter layer was combined with this organic light emitting device to obtain chromaticity x=0.67. Spectrum R when transmittance of the red filter layer was 75% is also shown in **FIG. 17**, and chromaticity coordinates and luminance are also shown in Table 4.

[0105] Further, spectrum GF when a green filter layer was combined with this organic light emitting device and green was extracted is also shown in **FIG. 17**. Further, emission intensity GCCM when the green filter layer and a green fluorescence conversion layer were combined with the organic light emitting device is also shown in **FIG. 17**, and chromaticity coordinates and luminance are also shown in Table 4.

[0106] Further, when a luminance half period of this organic light emitting device was measured, a result equal to in Example 1 was obtained.

[0107] As evidenced by **FIG. 17** and Table 4, since the green fluorescence conversion layer was used, relatively good chromaticity was obtained for green. However, efficiency of blue was significantly low. The reason thereof was that the spectrum P having the large emission intensity ratio r, 0.457 was used, the color filter of blue having low transmittance and higher density was used in order to obtain chromaticity of blue. That is, it was found that when the emission intensity ratio r was large, such as 0.457, a loss in color separation by the color filter was increased, and efficiency was decreased.

[0108] While the invention has been described with reference to the embodiments and examples, the invention is not limited to the foregoing embodiments and the foregoing examples, and various modifications may be made. For example, the materials and the thicknesses, or the deposition methods and the deposition conditions for the respective layers described in the foregoing embodiments and the foregoing examples can be other materials and thicknesses, or other deposition methods and deposition conditions. For example, in the foregoing embodiments and the foregoing examples, the case that the light emitting layer **13**C is made of the fluorescence light emitting material has been described. However, phosphorescence materials, whose performance has been significantly improved recently can be used. In this case, all of a plurality of light emitting layers can be made of the phosphorescence material, or part there of can be made of the phosphorescence material in view of life. Further, for example, in the foregoing embodiments and the foregoing examples, the case that coumarin 6 is used as a component material for the green fluorescence conversion layer **23** has been described. However, the green fluorescence conversion layer **23** can be made of other material. For example, if a high-efficiency color conversion layer using the phosphorescence is developed in the future, efficiency can be further improved by using it.

[0109] Further, for example, in the foregoing embodiments and the foregoing examples, constructions of the organic light emitting device, the display device, the display unit, and the imaging device have been described with reference to the concrete examples. However, it is not necessary that all layers or all components are provided. Further, other layers or other components can be further provided. For example, the second electrode **14** can be a transparent electrode.

[0110] Further, for example, in the foregoing embodiments and the foregoing examples, the case that the first electrode **12** is an anode and the second electrode **14** is a cathode has been described. However, it is possible to reverse the anode and the cathode, that is, to use the first electrode **12** as a cathode and the second electrode **14** as an anode.

[0111] Further, for example, in the second embodiment, the case of the tandem structure, wherein the blue organic layer **13**B and the red organic layer **13**R are layered through the intermediate electrode **15** has been described. However, it is possible that a plurality of organic layers having a red light emitting layer and a blue light emitting layer is layered to obtain the tandem structure. Further, the tandem structure is not limited to the structure, wherein two organic layers are layered. The tandem structure can have three or more organic layers.

[0112] Further, in the foregoing embodiments and the foregoing examples, descriptions have been given of the case using the organic light emitting device **10**M as a light emitting device. However, in addition to the organic light emitting device, the invention can be also applied to a display device having other light emitting device such as an inorganic EL device for performing AC drive by using a light emitting layer made of an inorganic material.

[0113] Obviously many modifications and variations of the present invention are possible in the light of the above teachings. It is therefore to be understood that within the scope of the appended claims the invention may be practiced otherwise than as specifically described.

What is claimed is:

1. A display device comprising:

a light emitting device for emitting blue light, red light, and green light, the emission intensity of the green light is relatively lower than those of the blue light and the red light;

a color filter provided to face the light emitting device, which has three filter layers corresponding to three colors, blue, red, and green; and

a green fluorescence conversion layer provided between the light emitting device and the green filter layer of the color filter, which absorbs blue light and emits green light.

2. A display device according to claim 1, wherein the light emitting device is an organic light emitting device comprising a light emitting layer made of an organic material.

3. A display device according to claim 1, wherein the color filter has a filter layer of cyan in addition to the filter layers of the three colors, and comprises a cyan fluorescence

conversion layer between the light emitting device and the filter layer of cyan, which absorbs blue light and emits cyan light.

4. A display device according to claim 1, wherein the emission intensity ratio r of the light emitting device shown in Mathematical formula 1 is from 0.1 to 0.45.

Emission intensity ratio $r=A/B$ (Mathematical formula 1)

where A represents a value obtained by integrating emission intensity of wavelengths from 480 nm to 590 nm in the spectrum of the light emitting device, and B represents a value obtained by integrating emission intensity of wavelengths from 420 nm to 680 nm in the spectrum of the light emitting device, respectively.

5. A display device according to claim 1, wherein the color filter transmits 70% or more of wavelengths of 455 nm and 630 nm respectively.

6. A display device according to claim 1, wherein the emission intensity of the blue band and the red band generated from the light emitting device are 20% or more of that of the visible light region.

7. A display device according to claim 1, wherein a reflective layer is provided on the side of the light emitting device, which reflects light generated in the light emitting device in the direction of the color filter.

8. A display device according to claim 7, wherein the light emitting device and the reflective layer are provided on a driving substrate to constitute a driving panel; the color filter and the green fluorescence conversion layer are provided on a sealing substrate to constitute a sealing panel; and the driving panel and the sealing panel are bonded together with an adhesive layer in between.

9. A display unit having a display device, wherein the display device comprises:

a light emitting device for emitting blue light, red light, and green light, the emission intensity of the green light is relatively lower than those of the blue light and the red light;

a color filter provided to face the light emitting device, which has three filter layers corresponding to three colors, blue, red, and green; and

a green fluorescence conversion layer provided between the light emitting device and the green filter layer of the color filter, which absorbs blue light and emits green light.

10. A display unit according to claim 9, wherein the light emitting device is an organic light emitting device comprising a light emitting layer made of an organic material.

11. A display unit according to claim 9, wherein the color filter has a filter layer of cyan in addition to the filter layers of the three colors, and comprises a cyan fluorescence conversion layer between the light emitting device and the filter layer of cyan, which absorbs blue light and emits cyan light.

12. An imaging device comprising:

an imaging portion for imaging an image; and

a display portion comprising a display device, which displays an image which is imaged by the imaging portion, wherein the display device comprises:

a light emitting device for emitting blue light, red light, and green light, the emission intensity of the green light is relatively lower than those of the blue light and the red light;

a color filter provided to face the light emitting device, which has three filter layers corresponding to three colors, blue, red, and green; and

a green fluorescence conversion layer provided between the light emitting device and the green filter layer of the color filter, which absorbs blue light and emits green light.

13. An imaging device according to claim 12, wherein the light emitting device is an organic light emitting device comprising a light emitting layer made of an organic material.

14. An imaging device according to claim 13, wherein the color filter has a filter layer of cyan in addition to the filter layers of the three colors, and comprises a cyan fluorescence conversion layer between the light emitting device and the filter layer of cyan.

* * * * *