US 20090051779A1

(19) United States

(12) Patent Application Publication

Rolston

(10) Pub. No.: US 2009/0051779 A1

(43) Pub. Date: Feb. 26, 2009

(54) MODIFYING VISUAL PERCEPTION

(75) Inventor: **Matthew Rolston**, Beverly Hills, CA (US)

Correspondence Address:
STEPTOE & JOHNSON LLP
2121 AVENUE OF THE STARS, SUITE 2800
LOS ANGELES, CA 90067 (US)

(73) Assignee: **MATTHEW ROLSTON PHOTOGRAPHER, INC.**, Beverly Hills, CA (US)

(21) Appl. No.: **12/195,369**

(22) Filed: **Aug. 20, 2008**

Related U.S. Application Data

(60) Provisional application No. 60/965,696, filed on Aug. 20, 2007.

Publication Classification

(51) **Int. Cl.**

H04N 5/222	(2006.01)
H04N 5/228	(2006.01)
B65D 85/72	(2006.01)
B43K 25/00	(2006.01)
A45D 40/00	(2006.01)
A47C 7/72	(2006.01)

(52) **U.S. Cl.** **348/222.1**; 348/333.01; 206/385; 401/52; 401/88; 297/217.3; 348/E05.031; 348/E05.022

(57) **ABSTRACT**

Various embodiments directed to modifying and enhancing visual perception are disclosed. One embodiment is directed to a camera which includes a lens system for capturing images and a lighting system providing key light above the lens system and providing fill light below the lens system. A processor controls one or more operations of the camera, including automatically enhancing the captured images and presenting the enhanced images on a display. The system and method for modifying visual perception may also be directed to a video camera mirror system, a seating system, a cosmetic package, a lipstick packaging, a polarized mirror, an illuminated cosmetic brush, a personal portrait photography management system and an illumination system for modifying visual perception.

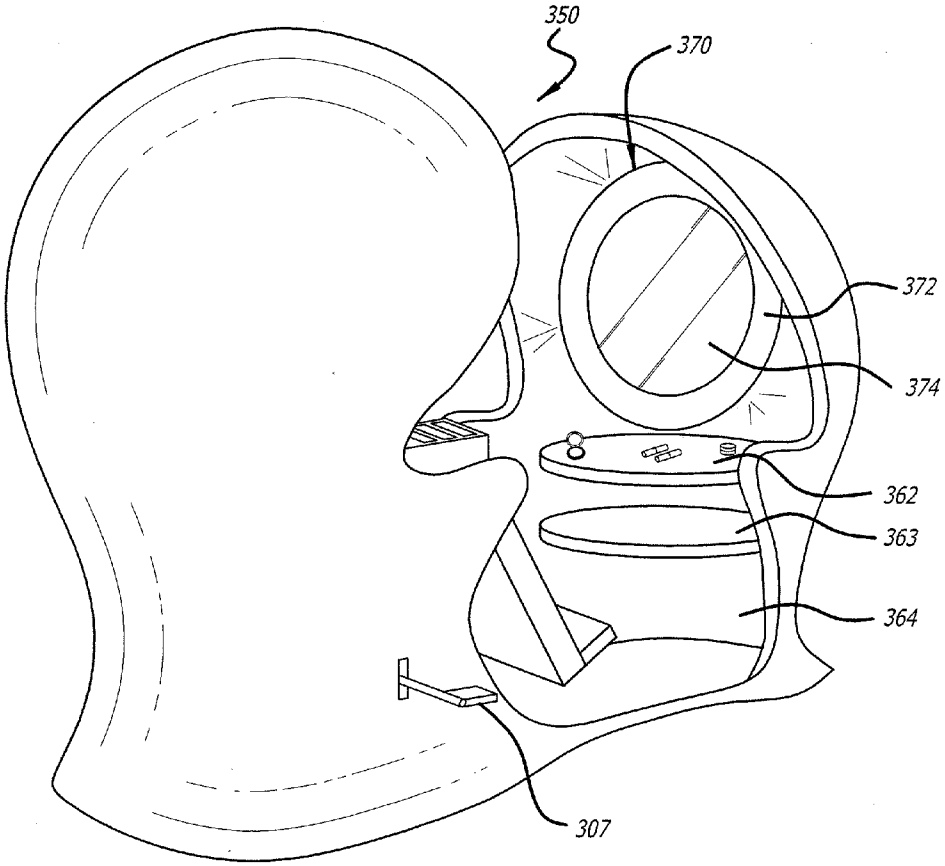

GOOGLE-SAMSUNG EXHIBIT 1032

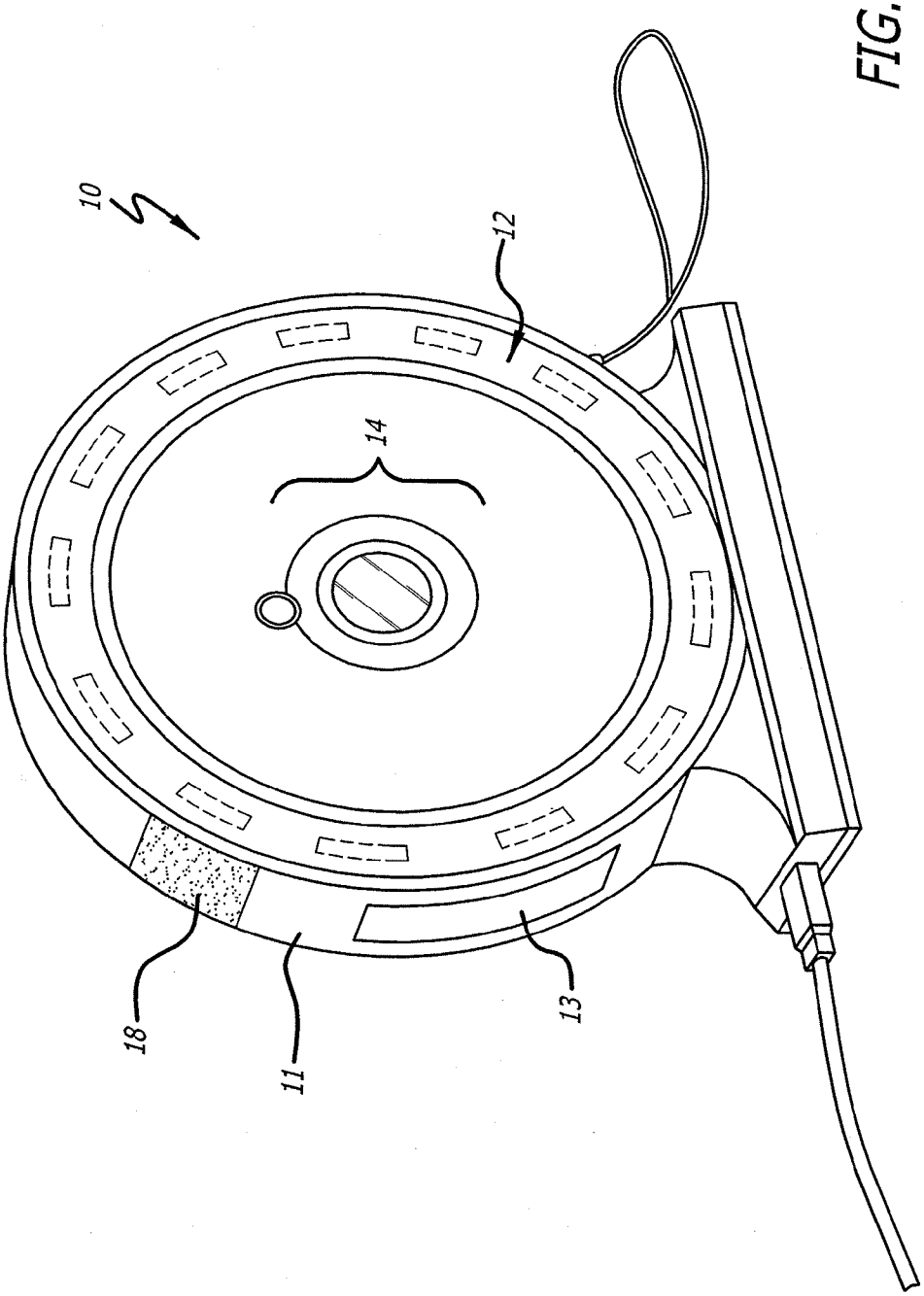

FIG. 1

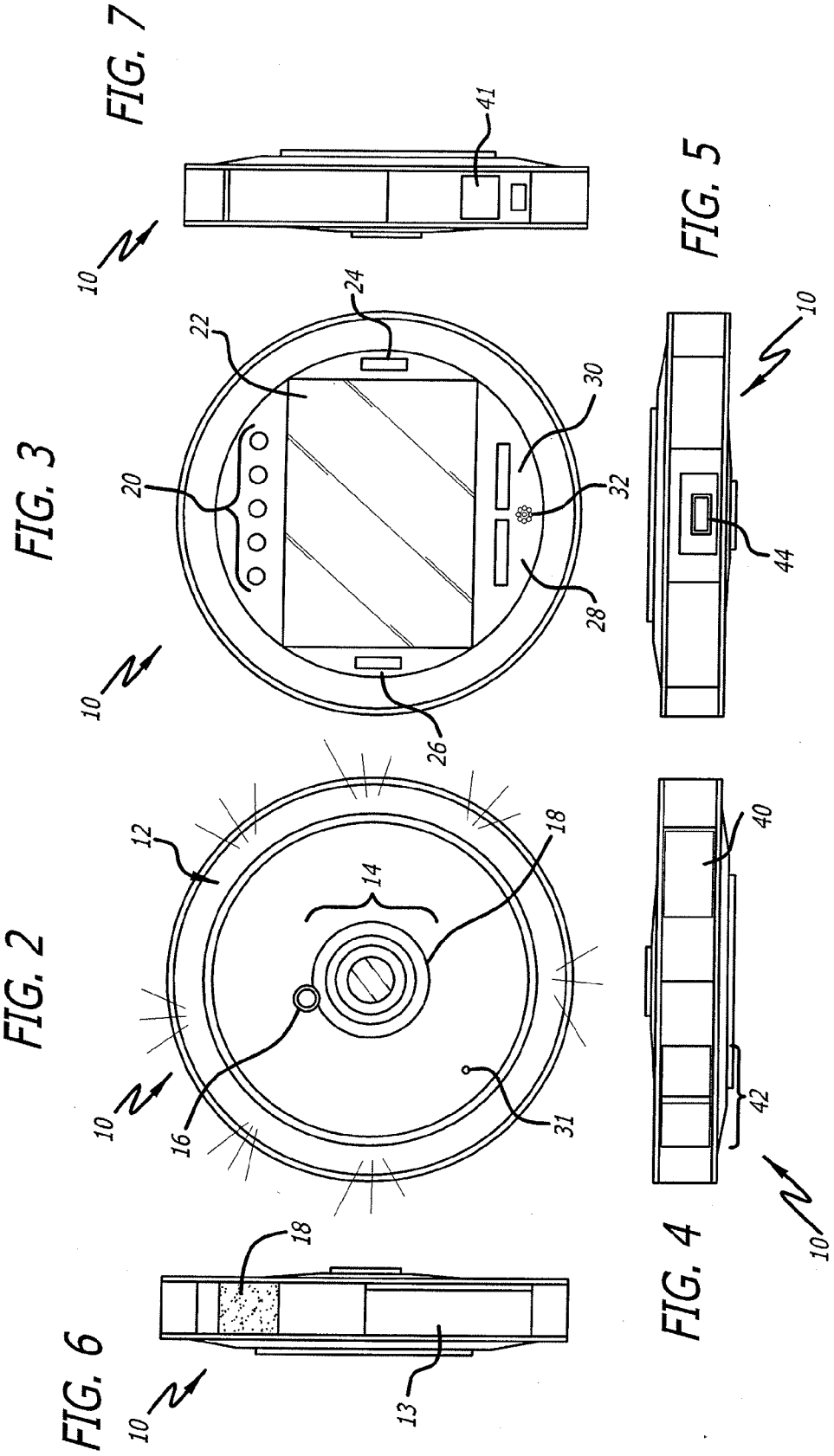
FIG. 7
FIG. 3
FIG. 5
FIG. 2
FIG. 4
FIG. 6
10
41
24
22
20
30
32
28
26
44
12
14
18
16
31
40
42
13

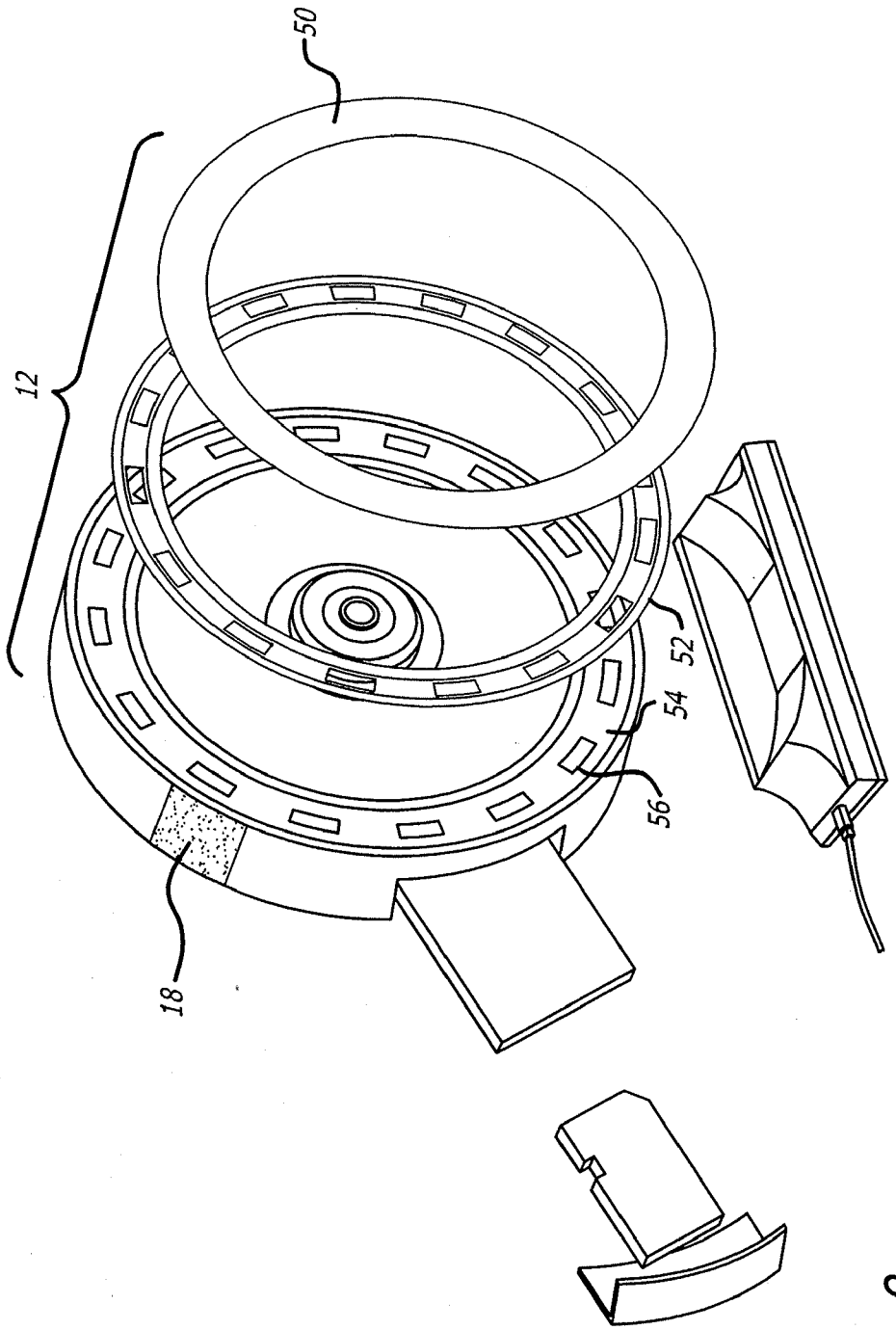

FIG. 8

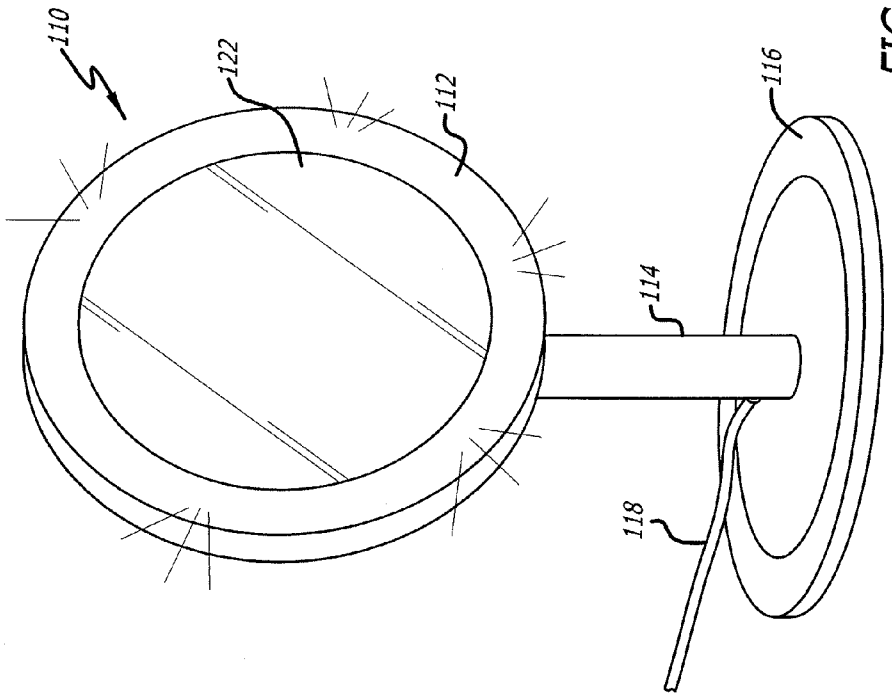

FIG. 9

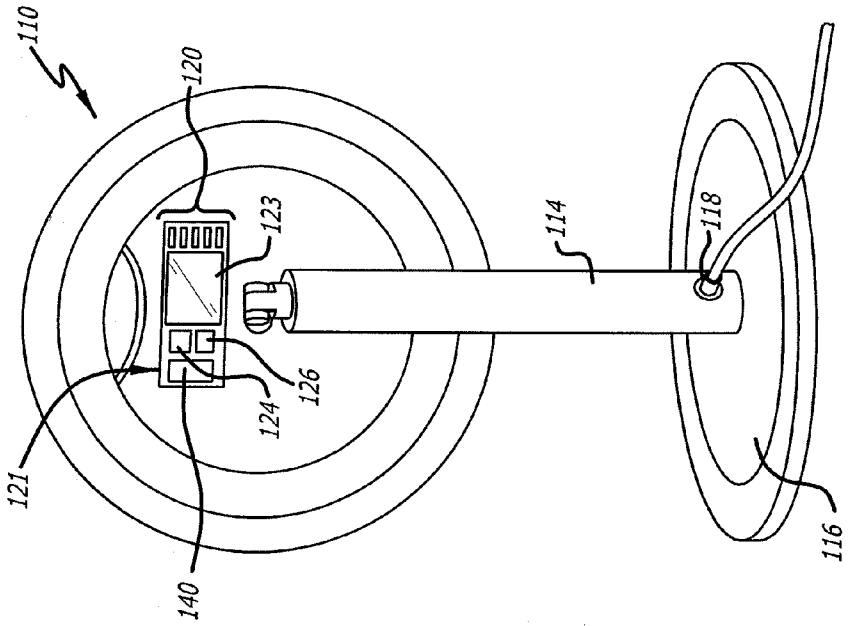

FIG. 10

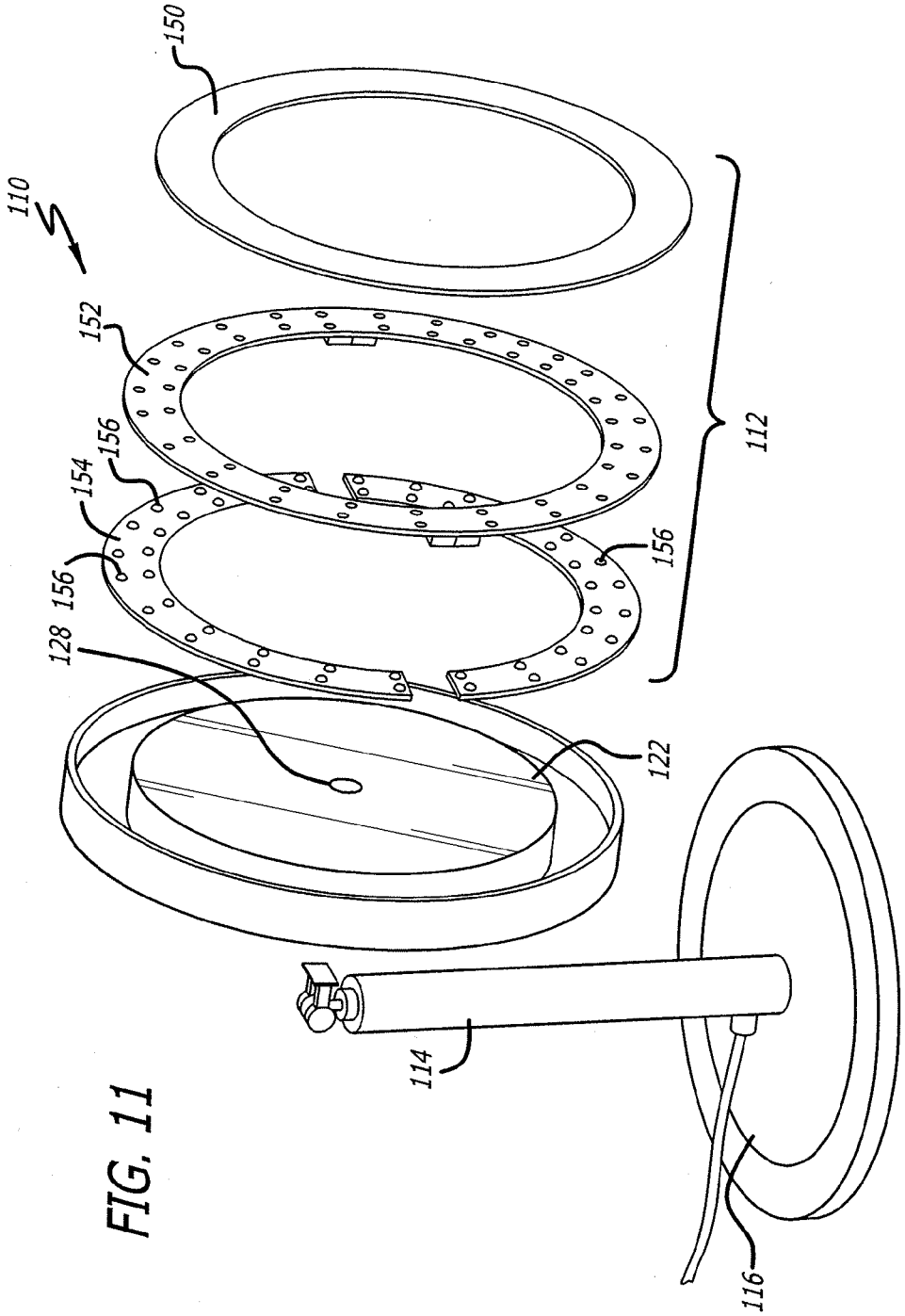

FIG. 11

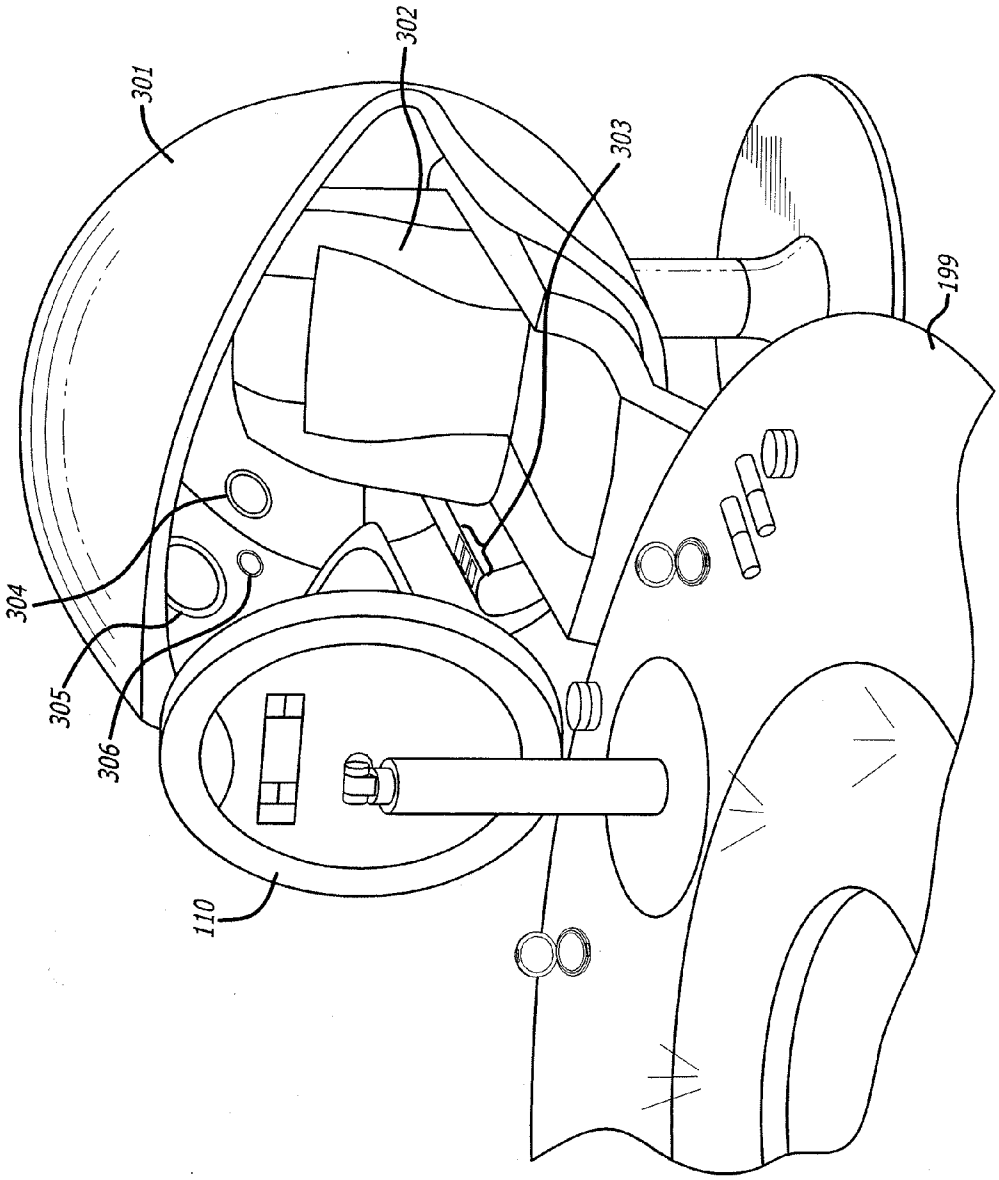

FIG. 12

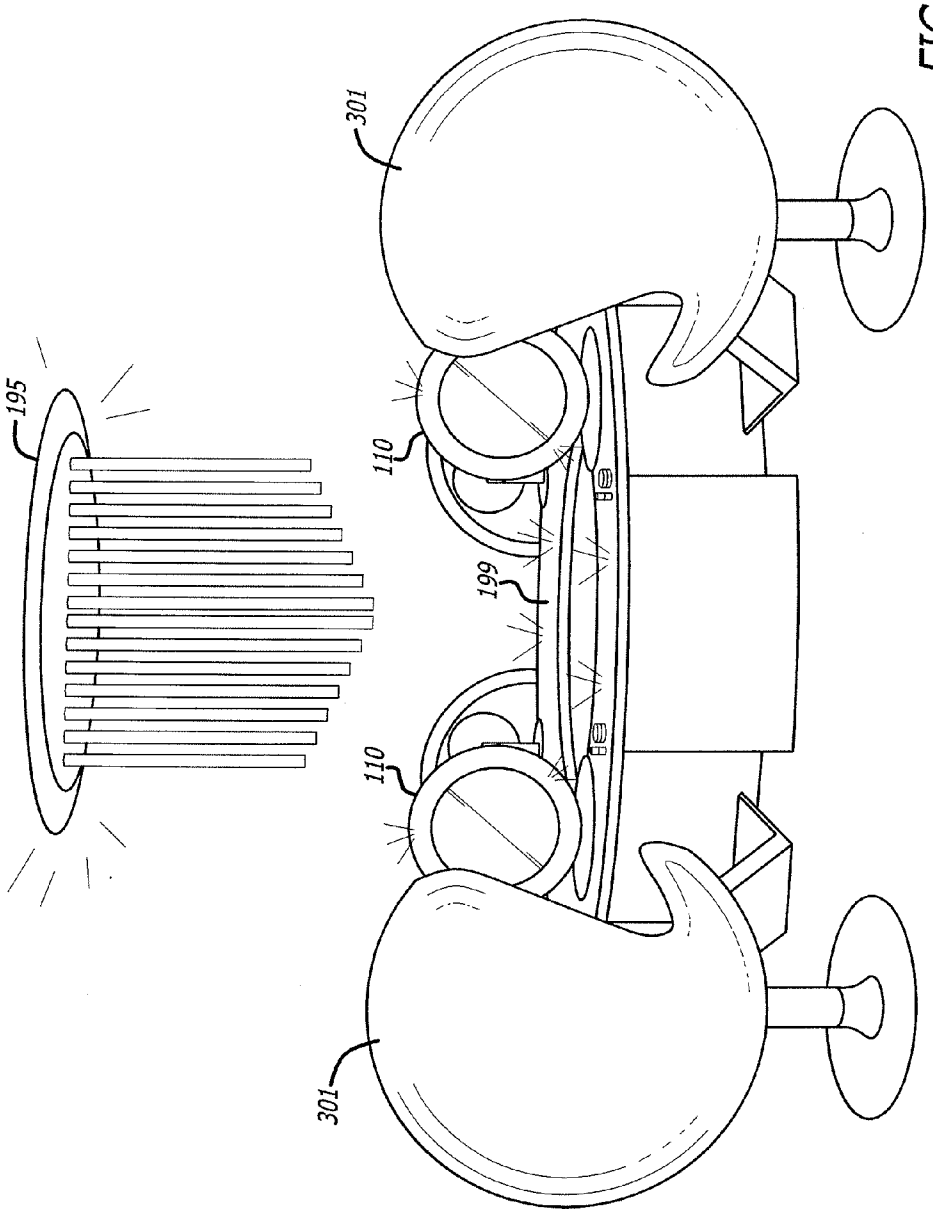

FIG. 13

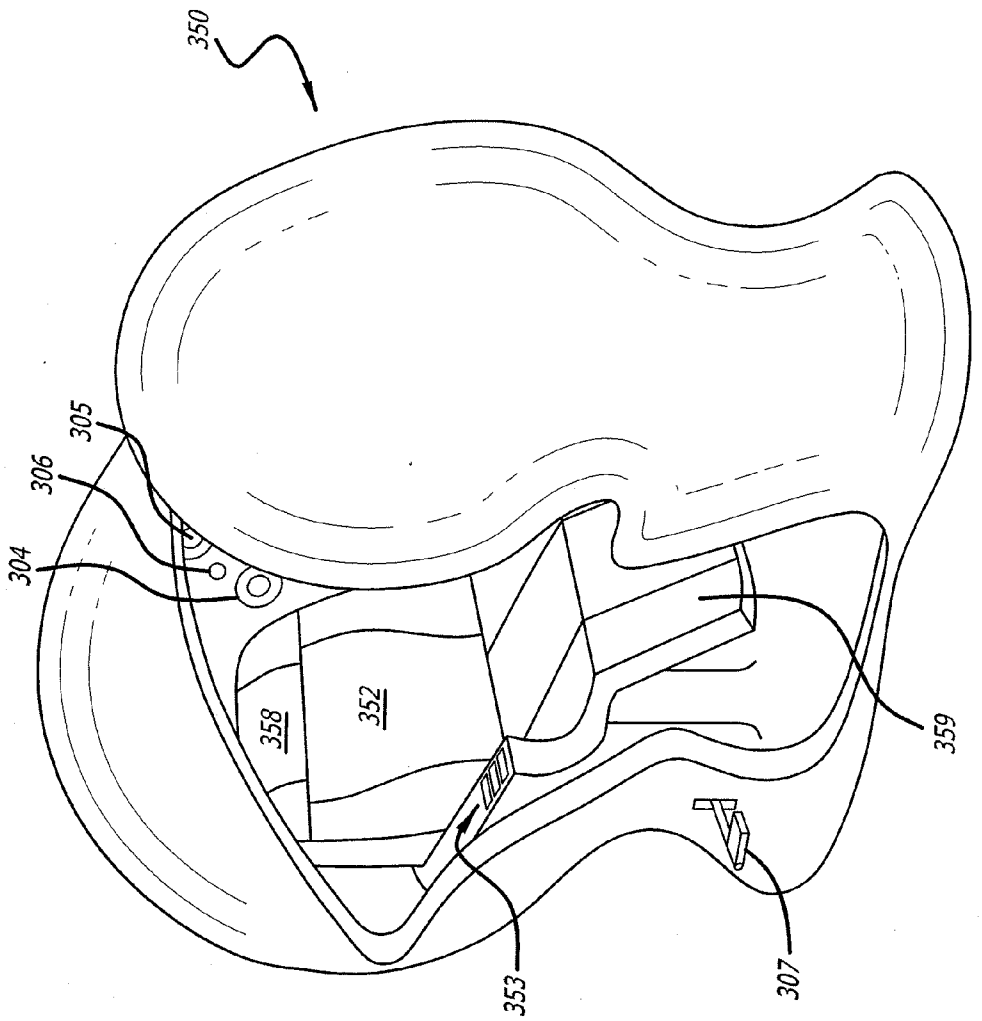

FIG. 14

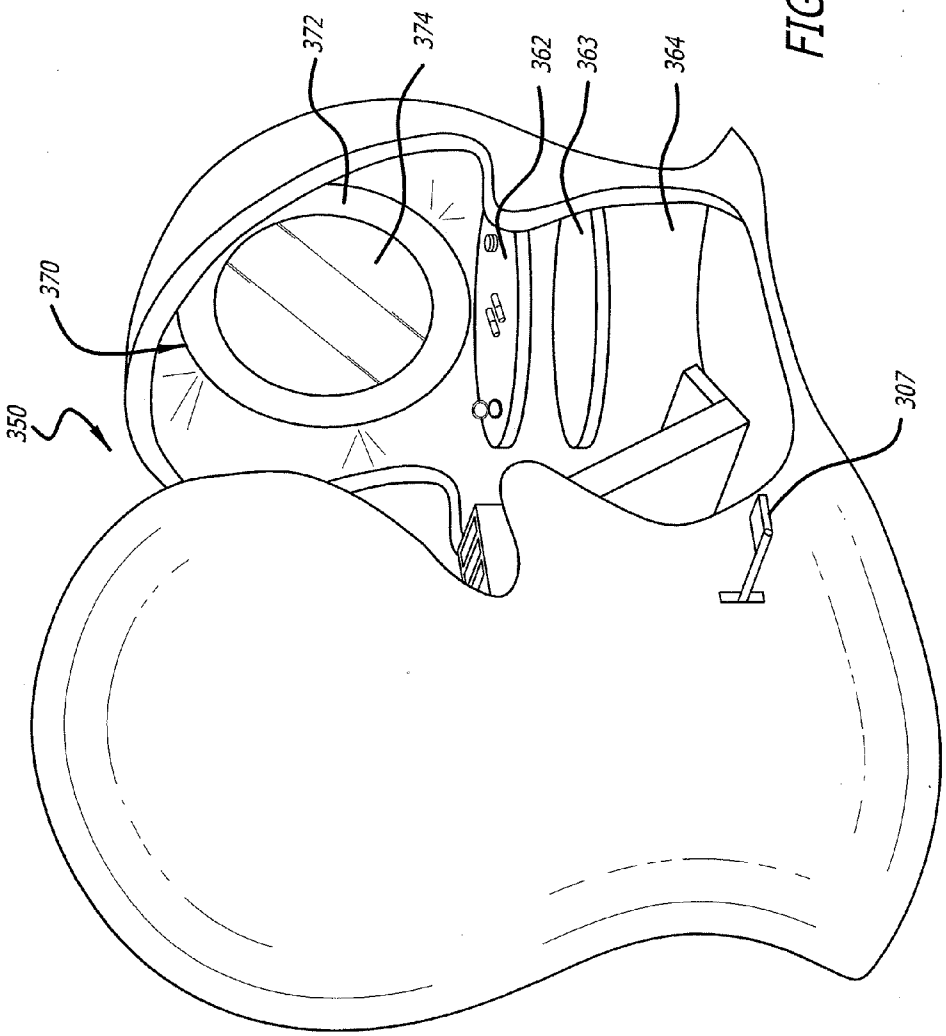

FIG. 15

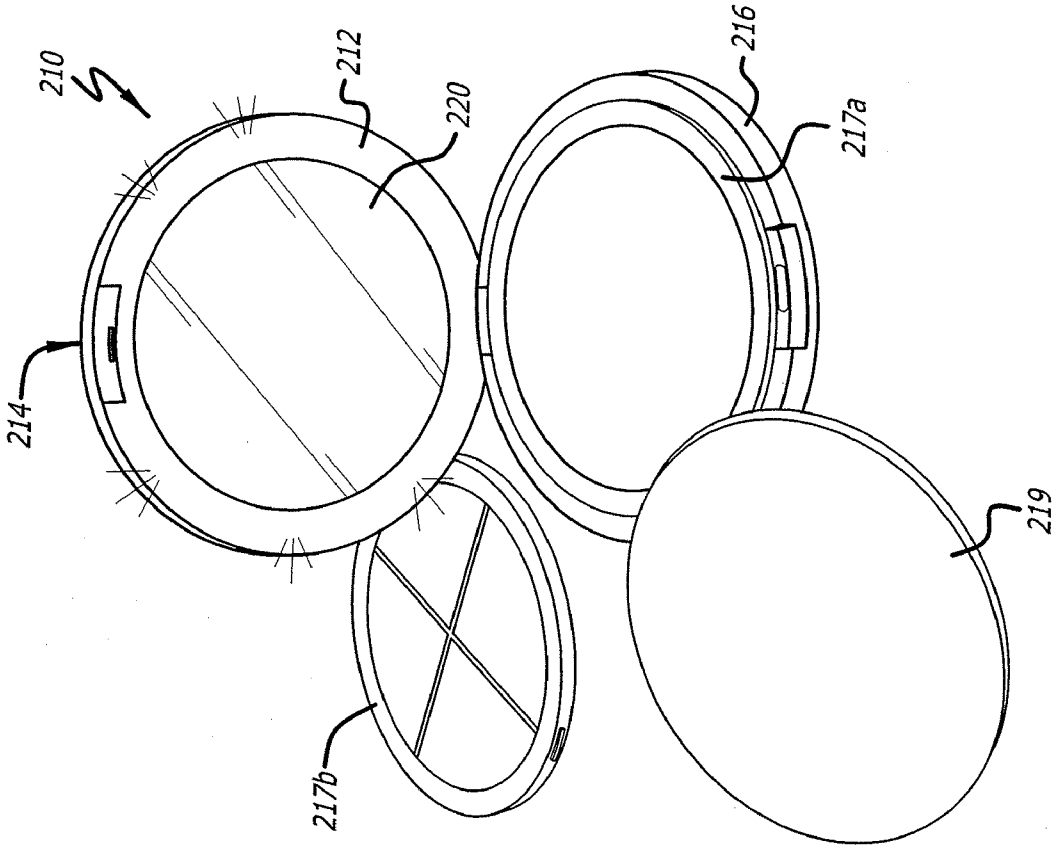

FIG. 16

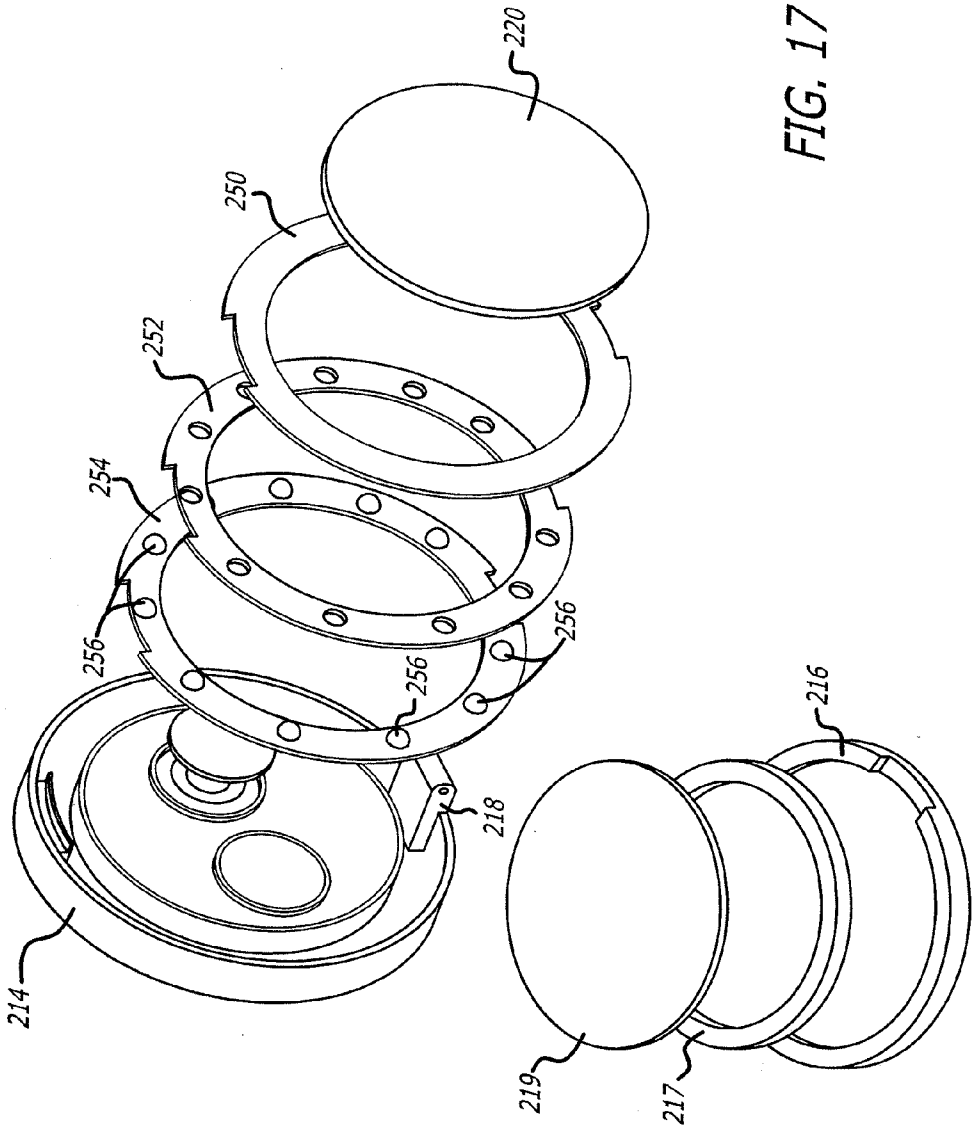

FIG. 17

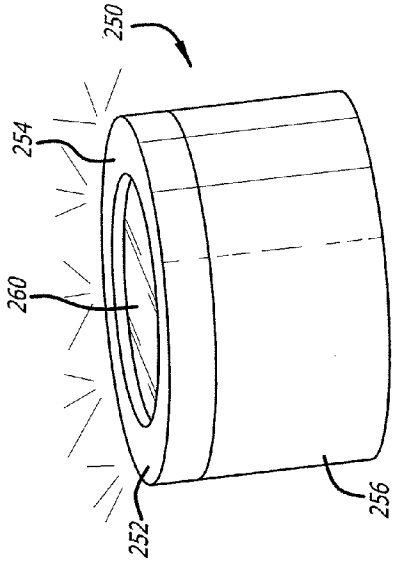

FIG. 19

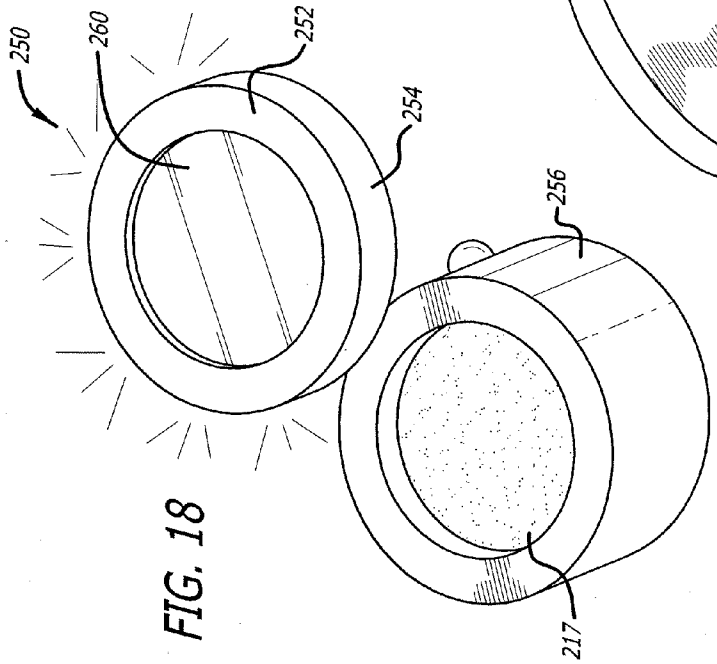

FIG. 18

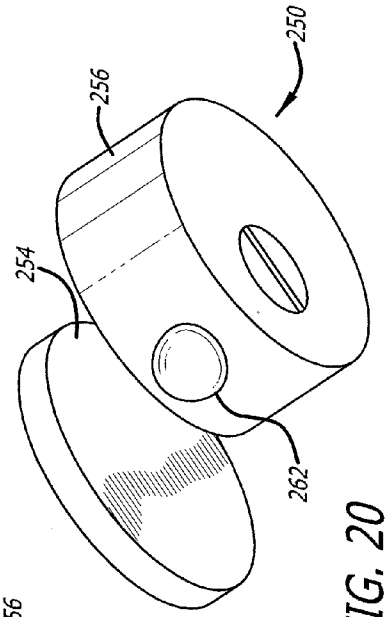

FIG. 20

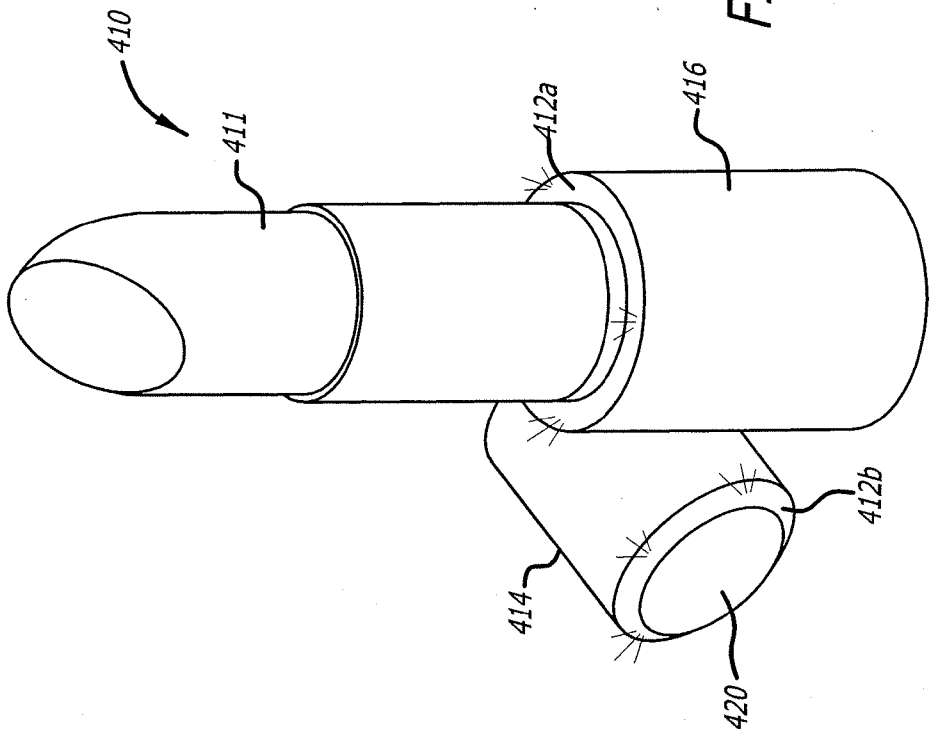

FIG. 21

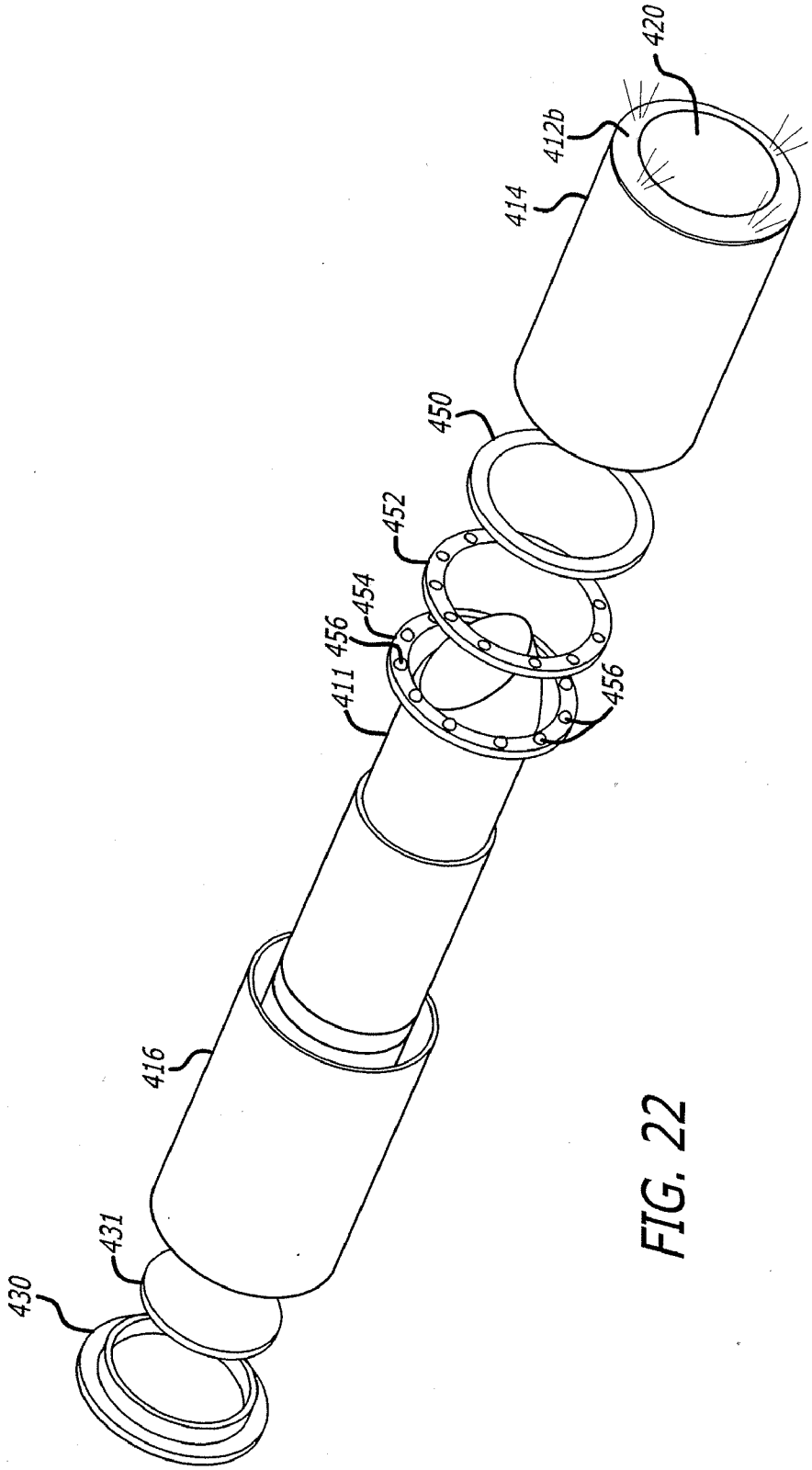

FIG. 22

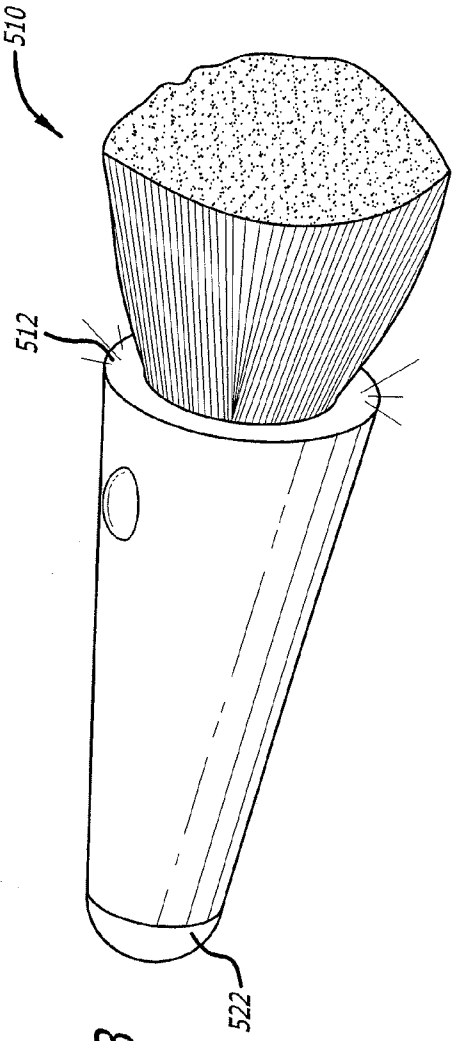

FIG. 23

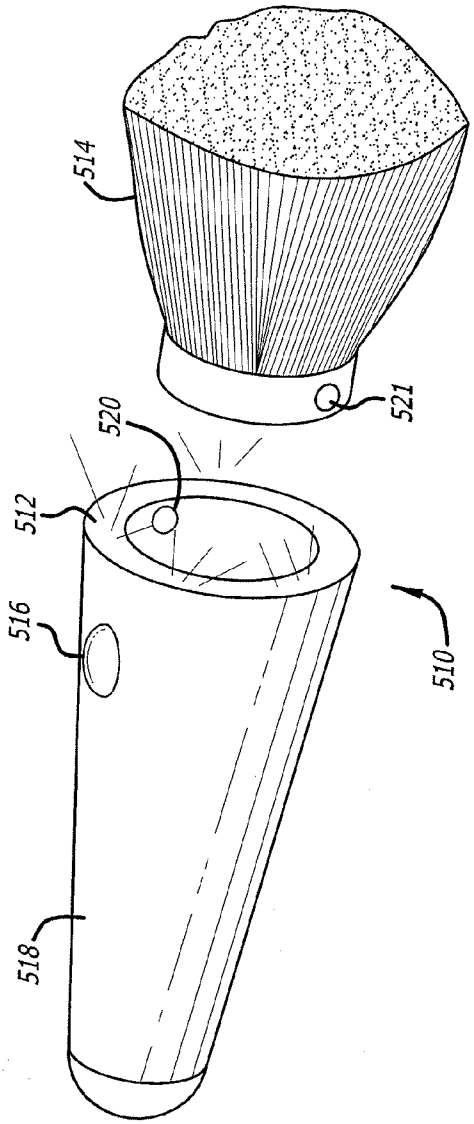

FIG. 24

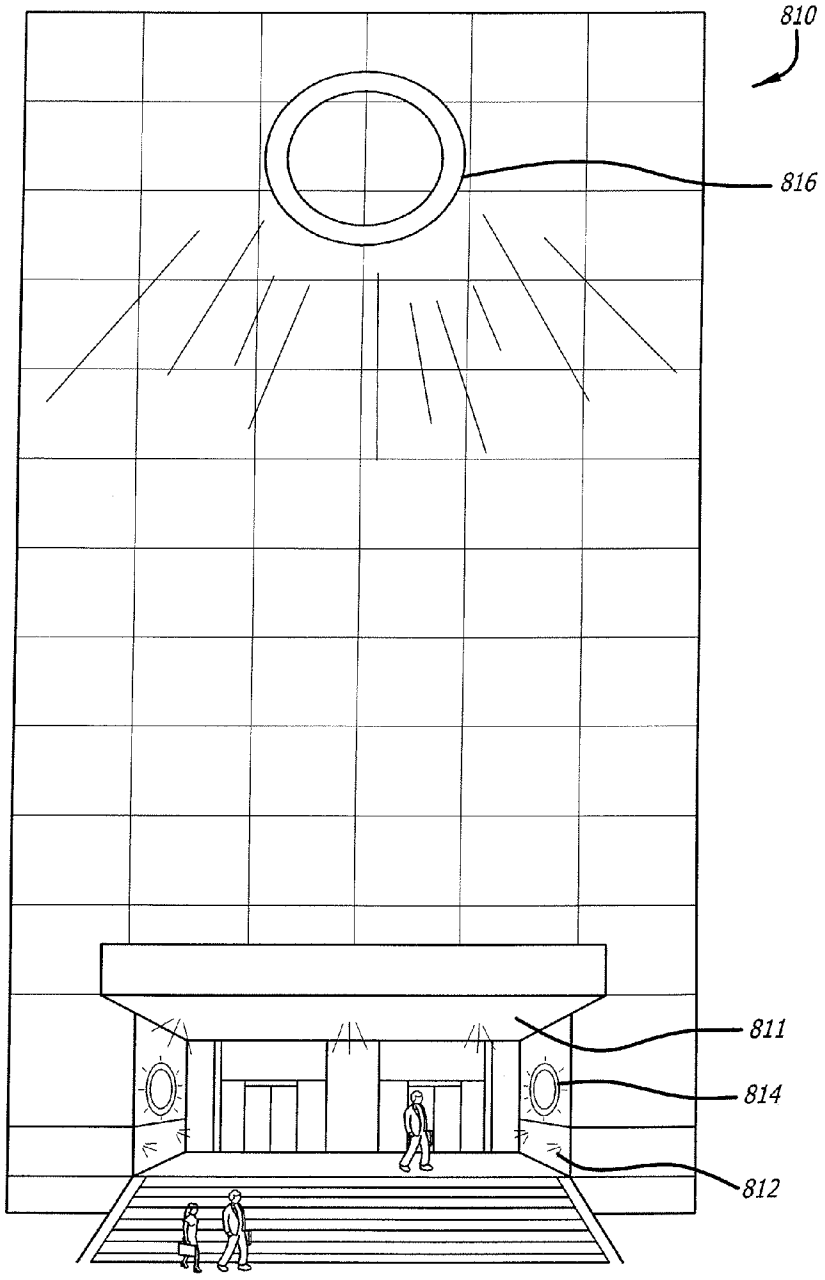

FIG. 25

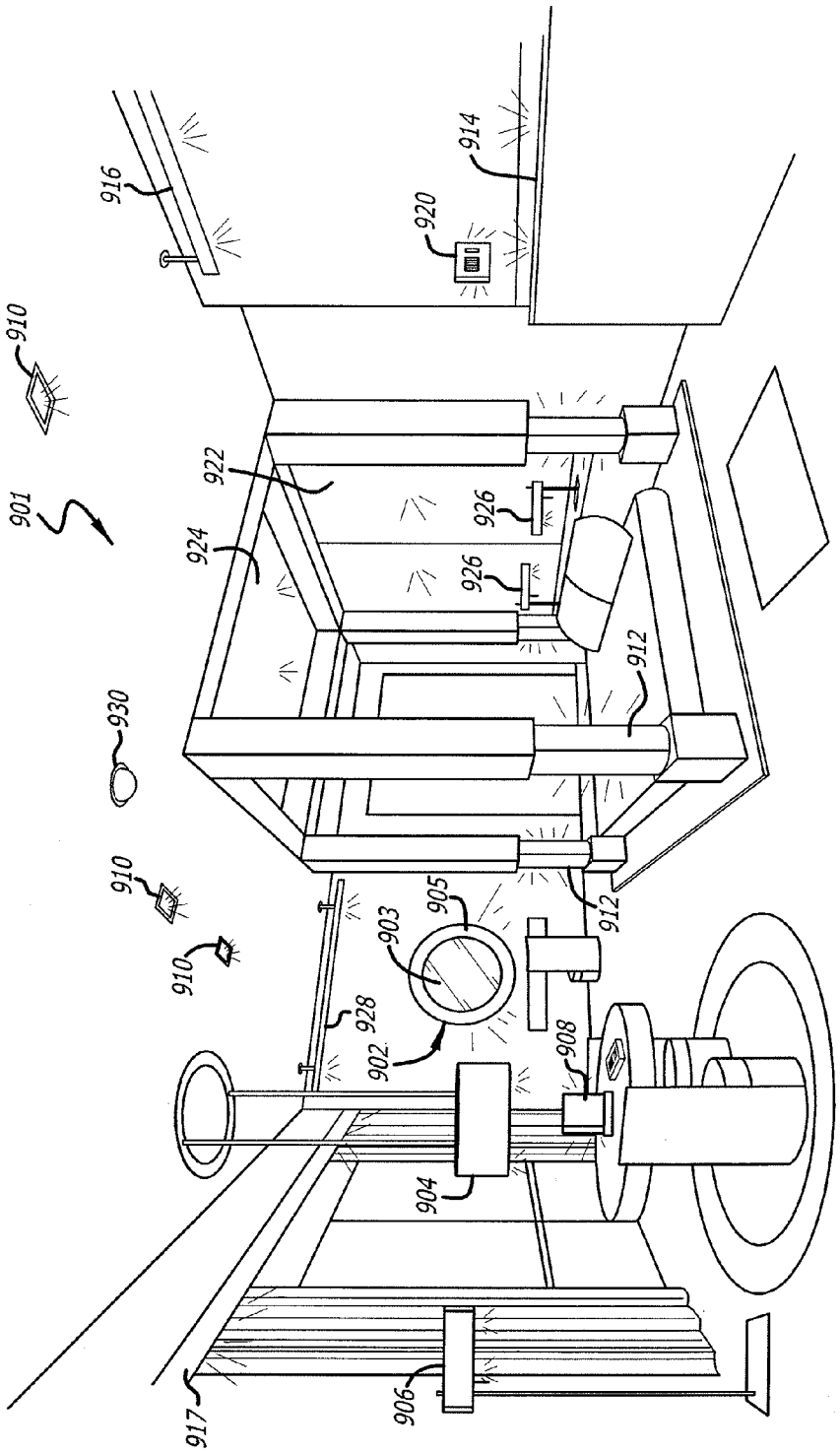
901
902
903
904
905
906
908
910
910
910
912
912
914
916
917
920
922
924
926
926
928
930

FIG. 26

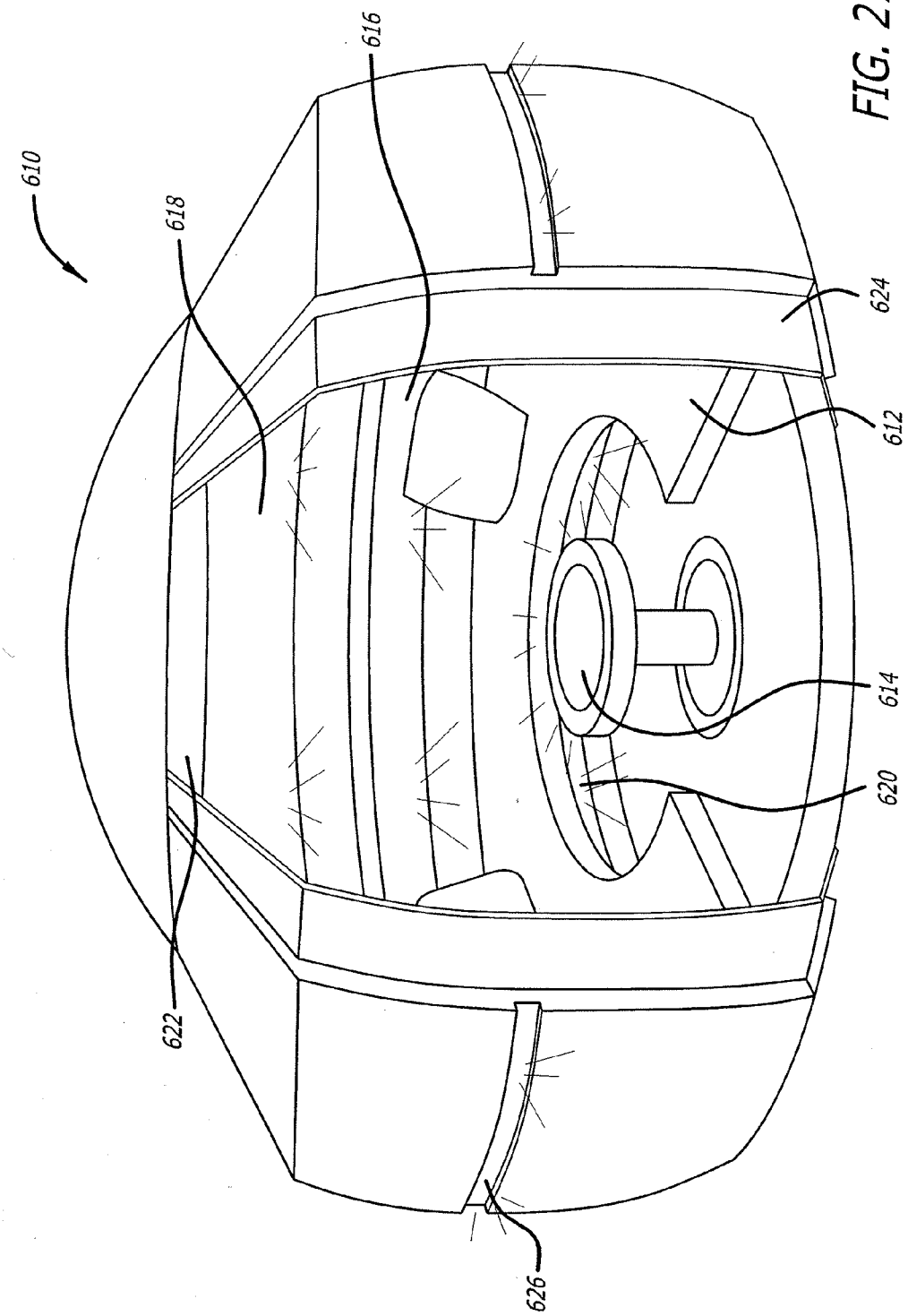

FIG. 27

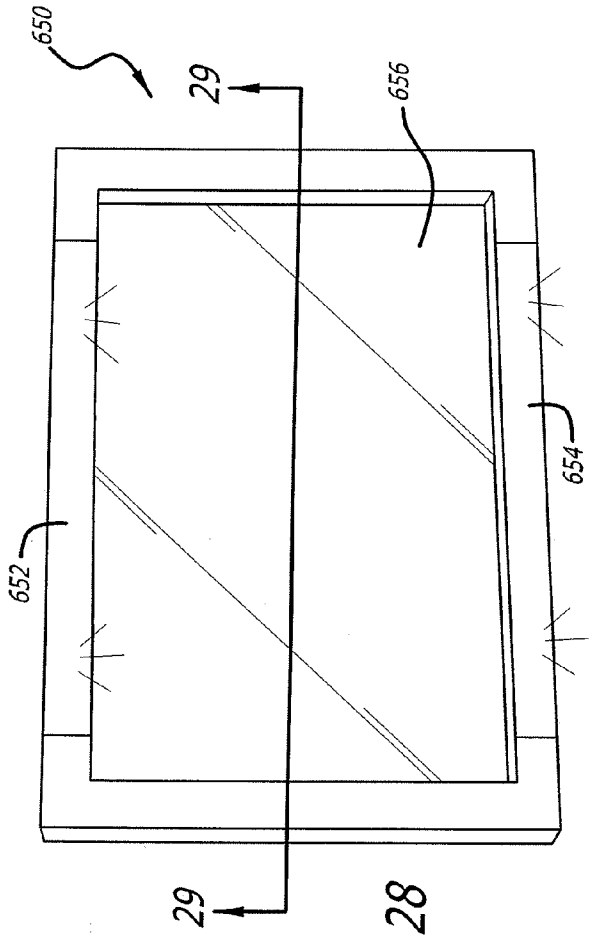

FIG. 28

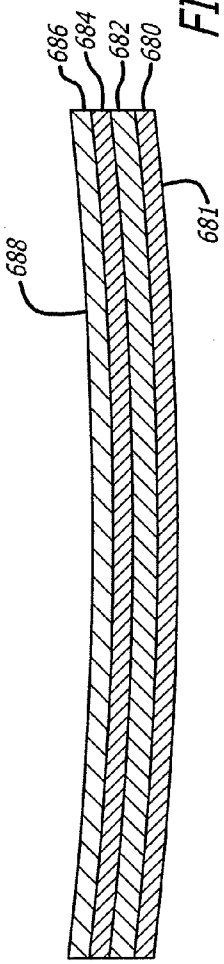

FIG. 29

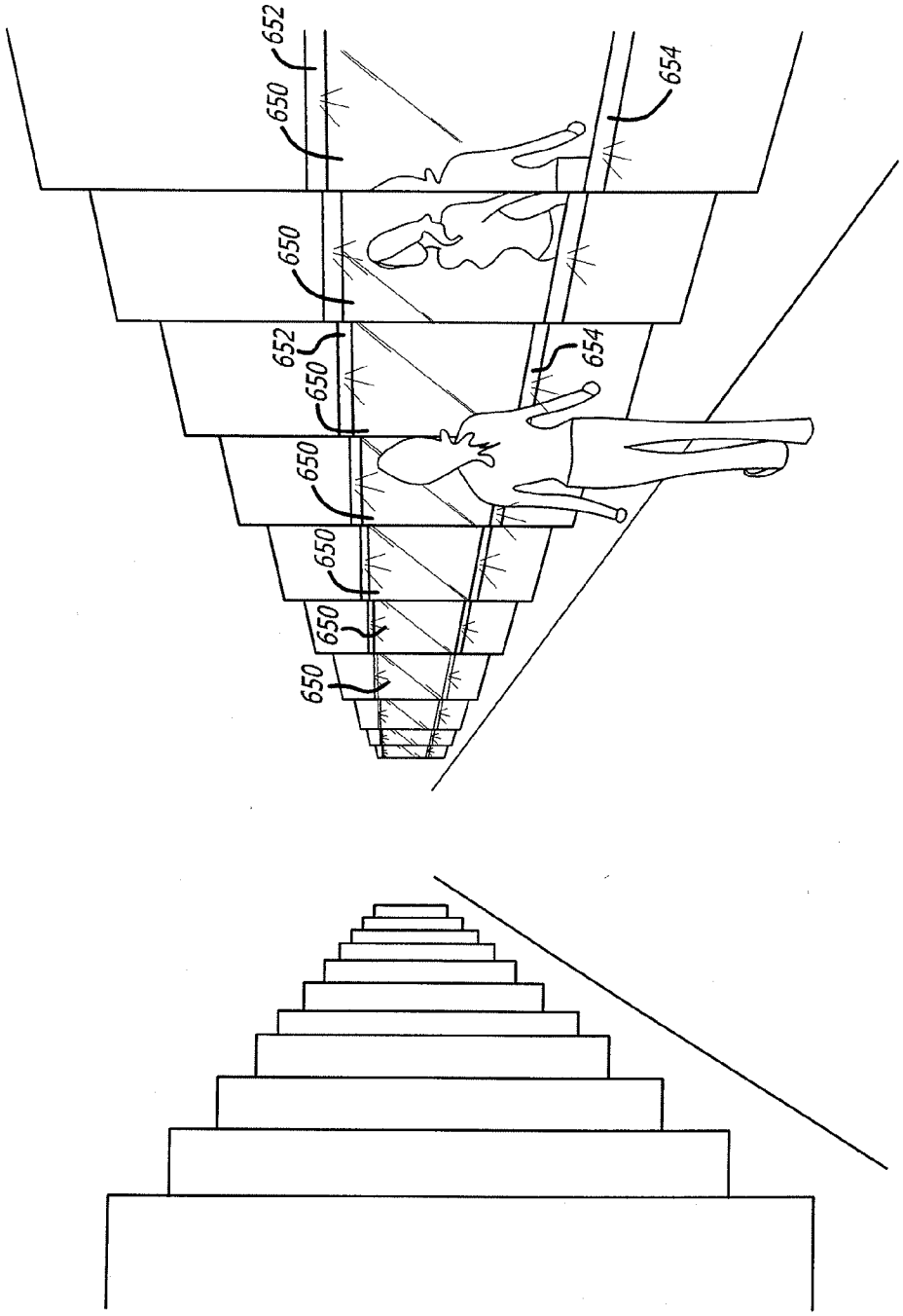

FIG. 30

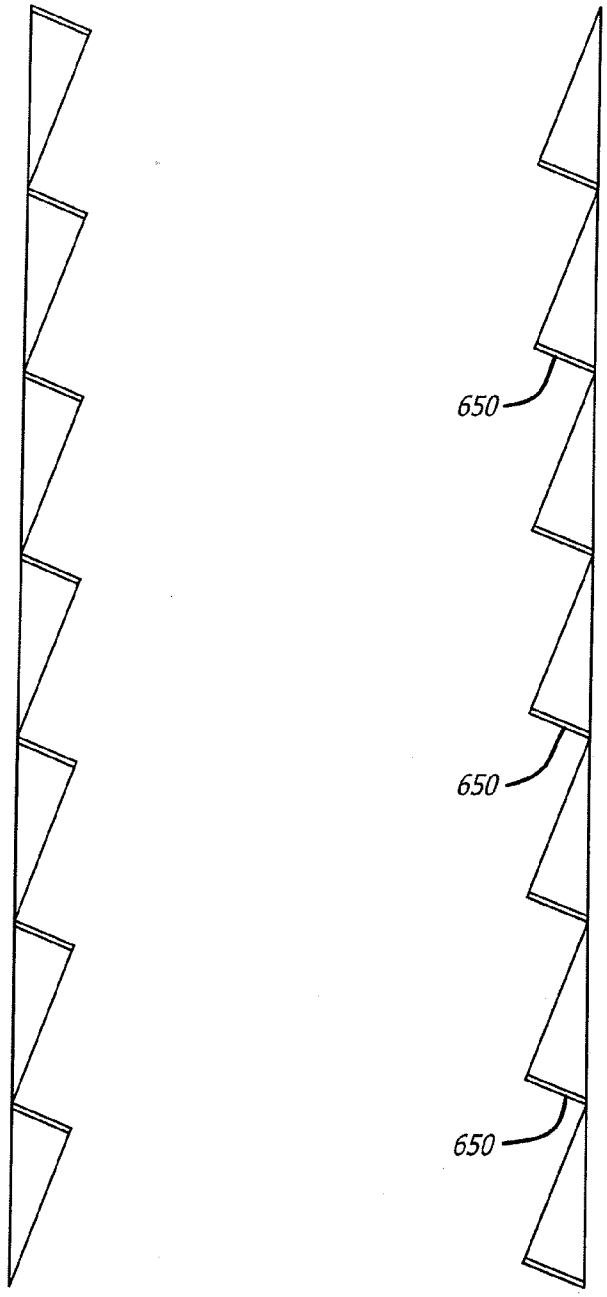

FIG. 31

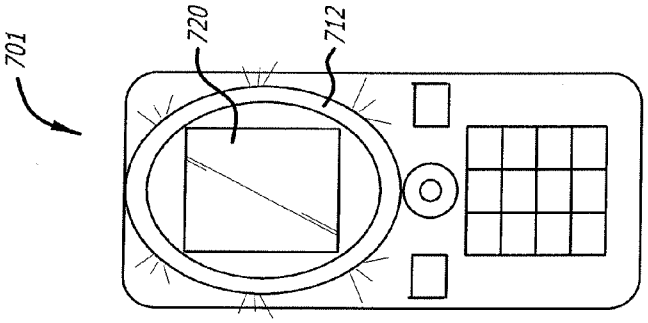

FIG. 33

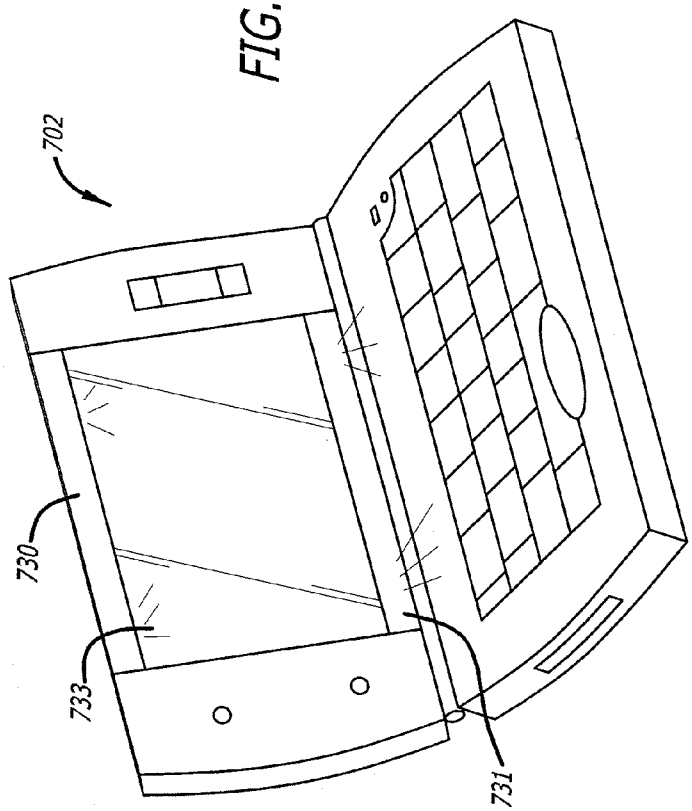

FIG. 32

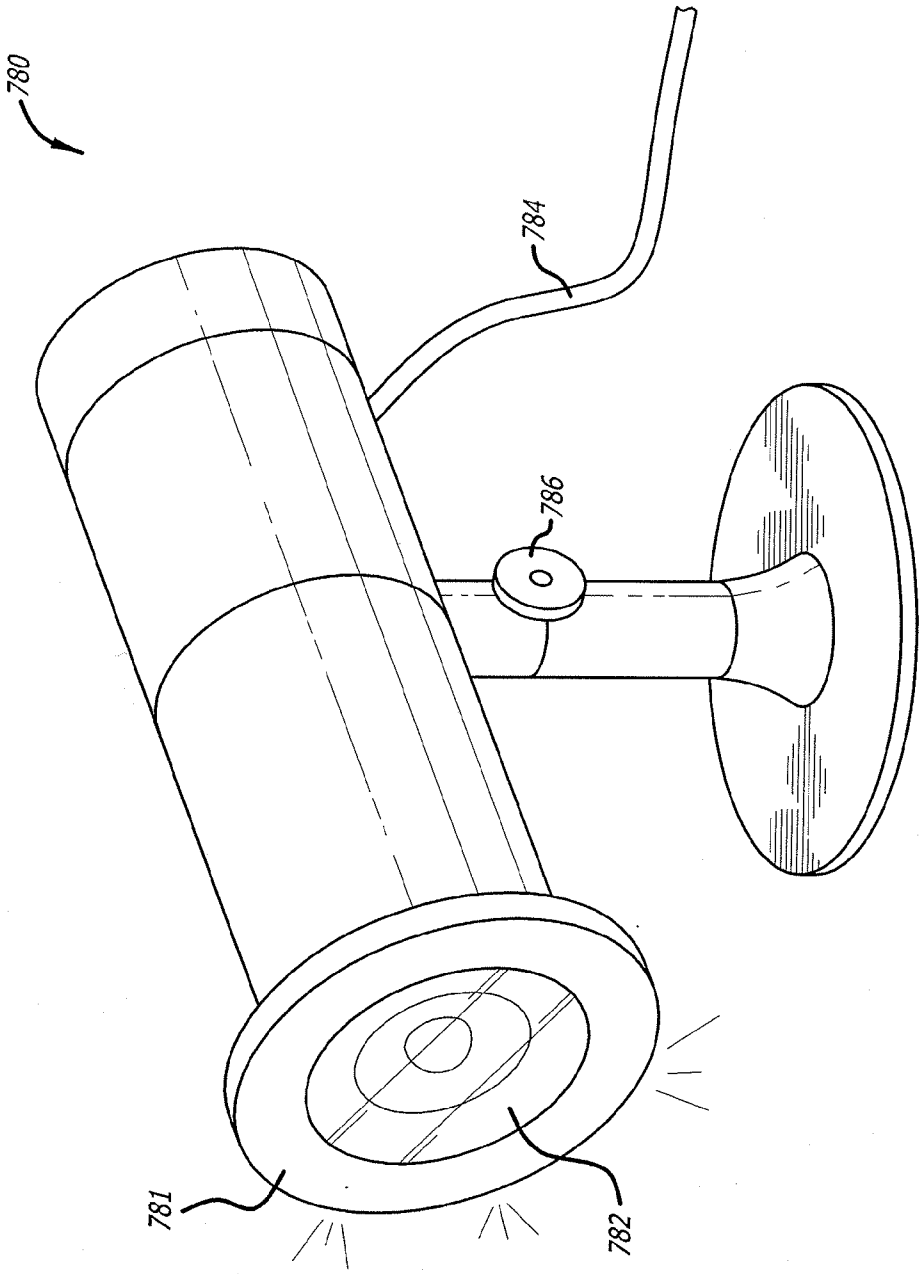

FIG. 34

MODIFYING VISUAL PERCEPTION

CROSS-REFERENCE TO RELATED APPLICATIONS

[0001] This application claims the benefit of U.S. provisional patent application No. 60/965,696, filed Aug. 20, 2008, which is herein incorporated by reference in its entirety.

[0002] Embodiments disclosed herein generally relate to a system and method for modifying the visual perception of images and/or subjects.

BACKGROUND

[0003] Over the years, various techniques and methods have been implemented to aid in a person's quest to look and feel beautiful. For example, cosmetics, fashion and even surgical procedures have been used to increase the beautification process and improve people's perception of beauty. However, there remains a need for a system and method for enhancing the perceived visual perception of a person.

SUMMARY

[0004] Briefly, and in general terms, various embodiments directed to a system and method for modifying the appearance of a targeted subject. More particularly, various embodiments are directed enhancing the visual perception of a subject. One embodiment is directed to a camera comprising a camera body and a lens system for capturing images, wherein at least a portion of the lens system is positioned on the outer surface of the camera body. A lighting system is positioned on the outer surface of the camera body and is proximate to the lens system. The lighting system provides key light above the lens system and provides fill light below the lens system. A processor is housed within the camera body. The processor controls one or more operations of the camera including automatically enhancing the captured images. A display is presented on the outer surface of the camera body and displays the automatically enhanced images.

[0005] Another embodiment is directed to a video camera mirror system for enhancing visual perception. The video camera mirror system comprises a high definition video display configured to mimic a mirror reflection, wherein the high definition video display has an outer perimeter. A lighting system surrounds the outer perimeter of the video display. The lighting system provides key light above the high definition video display and provides fill light below the high definition video display. A camera is embedded behind the video display and the embedded camera captures moving images. A processor is operatively connected to the camera and is configured to automatically enhance the captured images and display the enhanced images as a mirror reflection on the video display.

[0006] Yet another embodiment is directed to a seating system for use in enhancing visual perception. The seating system comprises a housing configured to reduce ambient noise and a seat positioned within the housing. A video camera mirror is positioned in the housing opposite the seat and is configured to mimic a mirror reflection. The video camera mirror includes a high definition video display, a lighting system positioned to surround the outer perimeter of the high definition video display, a camera embedded behind the video display to capture moving images, and a processor to automatically enhance the captured images and display the enhanced images as a mirror reflection on the video display.

[0007] Another embodiment is directed to a cosmetic package comprising a top cover pivotally attached to a bottom cover. A mirror is attached to the top cover, wherein the mirror is surrounded by a lighting system. An interchangeable pan is removably contained in the bottom cover.

[0008] In another embodiment, a lipstick packaging comprises a container having an open end and a closed end, wherein the container is configured to hold a tube of lipstick. The lighting system is positioned along a ridge portion of the container and the lighting system provides a light source in the direction of the open end of the container. A cap is configured to removably connect to the open end of the container, and a mirror is positioned on the cap.

[0009] Another embodiment comprising a polarized mirror having a mirror display. The mirror display comprises a mirrored surface and a diffusion material layered over the mirrored surface. A glass material is layered over the diffusion material and a polarized filter is layered over the glass surface. Key light is positioned over the mirror display and fill light is positioned beneath the mirror display.

[0010] In another embodiment, an illuminated cosmetic brush comprises a brush head and a handle configured to removably connect to the brush head via an attachment point. A lighting system surrounds the handle and directs lighting around the brush head.

[0011] Another embodiment is directed to a personal portrait photography management system comprising an image capturing device having a lens and a lighting system surrounding the lens of the image capturing device. The lighting system provides key light above the lens and provides fill light below the lens. A processor, operatively connected to the image capturing device, analyzes the captured images and automatically enhances the captured images. The automatically enhanced images are displayed on a display.

[0012] Another embodiment is directed to an illumination system for modifying visual perception. The system comprises one or more key lights positioned within the interior of the room and one or more fill lights positioned within the interior of the room. A processor is operatively connected to each of the one or more key lights and to each of the one or more fill lights, wherein the processor is configured to control the operation of the lights. A sensor is operatively connected to the processor, and the sensor is configured to detect color quality information from a target image and use the information to adjust at least one of the key and fill lights to adjust the lighting tone.

[0013] These and other features and advantages will become apparent from the following detailed description, taken in conjunction with the accompanying drawings, which illustrate by way of example, the features of the various embodiments.

BRIEF DESCRIPTION OF THE DRAWINGS

[0014] FIG. **1** is an example illustration of a camera for use in accordance with an embodiment of modifying visual perception.

[0015] FIG. **2** is a front view of one embodiment of the camera.

[0016] FIG. **3** is a back view of one embodiment of the camera.

[0017] FIG. **4** is a top view of one embodiment of the camera.

[0018] FIG. **5** is a bottom view of one embodiment of the camera.

[0019] FIG. **6** is a side view of one embodiment of the camera.

[0020] FIG. **7** is an alternate side view of one embodiment of the camera.

[0021] FIG. **8** is an example illustration of various components of the lighting system incorporated into one embodiment of the camera.

[0022] FIG. **9** is an example illustration of a video camera mirror system for use in accordance with an embodiment of modifying visual perception.

[0023] FIG. **10** is the back view of one embodiment of the video camera mirror system.

[0024] FIG. **11** is an example illustration of various components of the lighting system incorporated into one embodiment of the video camera mirror system.

[0025] FIG. **12** is another example illustration of a video camera mirror system for use in combination with a chair in accordance with an embodiment of modifying visual perception.

[0026] FIG. **13** illustrates an example of another embodiment of a video camera mirror system in combination with a chair in accordance with an embodiment of modifying visual perception.

[0027] FIG. **14** illustrates a pod for use with another embodiment of modifying visual perception.

[0028] FIG. **15** illustrates an alternate view of the pod.

[0029] FIG. **16** is an example illustration of one embodiment of a cosmetic compact in accordance with an embodiment of modifying visual perception.

[0030] FIG. **17** is an expanded view of one embodiment of a cosmetic compact in accordance with an embodiment of modifying visual perception.

[0031] FIG. **18** is an example illustration of one embodiment of cosmetic packaging in accordance with an embodiment of modifying visual perception.

[0032] FIG. **19** is another view of the cosmetic packaging in accordance with an embodiment of modifying visual perception.

[0033] FIG. **20** is yet another view of the cosmetic packaging in accordance with an embodiment of modifying visual perception.

[0034] FIG. **21** is an example illustration of lipstick packaging in accordance with an embodiment of modifying visual perception.

[0035] FIG. **22** is an expanded view of the lipstick packaging.

[0036] FIG. **23** is an example illustration of an illuminated brush system in accordance with an embodiment of modifying visual perception.

[0037] FIG. **24** is another view of the illuminated brush system.

[0038] FIG. **25** is an example illustration of an exterior lighting system in accordance with an embodiment of modifying visual perception.

[0039] FIG. **26** is another example illustration of an interior lighting system in accordance with an embodiment of modifying visual perception.

[0040] FIG. **27** is an example illustration of an enclosed pod structure in accordance with an embodiment of modifying visual perception.

[0041] FIG. **28** is an example illustration of a polarized mirror in accordance with an embodiment of modifying visual perception.

[0042] FIG. **29** is a cross section view of the polarized mirror in FIG. **28** taken along line **29**.

[0043] FIG. **30** is an example illustration of multiple polarized mirrors for use in accordance with an embodiment of modifying visual perception.

[0044] FIG. **31** is an overhead view of the placement of multiple polarized mirrors in accordance with an embodiment of modifying visual perception.

[0045] FIG. **32** is an example illustration of a mobile device in accordance with an embodiment of modifying visual perception.

[0046] FIG. **33** is another example illustration of a mobile device in accordance with another embodiment of modifying visual perception.

[0047] FIG. **34** is an example illustration of a web camera in accordance with an embodiment of modifying visual perception.

DETAILED DESCRIPTION

[0048] Various embodiments disclosed herein are directed to modifying visual perception. More particularly, various embodiments employ lighting techniques to modify the appearance of a subject, such as a person, place or thing. Additionally, lighting techniques in combination with real time modification features may be applied to electronically captured imagery. Additionally, lighting placement and positioning techniques may be further incorporated to modify and/or enhance the appearance of a targeted subject.

[0049] Various lighting techniques may be used to affect the physical appearance of a targeted subject or location. In particular, a combination of key light and fill light may be used to modify the appearance of the subject (e.g., the person, place or thing). Generally, key light is used to highlight and/or shape the form and dimension of a subject. In comparison, fill light is typically used to "fill in" the shadows caused by the main light (or the key light). Typically, the fill light is softer and less intense than the key light. However, in some situations a key light and fill light of equal intensity may be applied to create a particular enhanced cosmetic effect. The application of key and fill light in combination may produce the illusion of light emanating from within a center point, as opposed to the appearance that light is being applied to a person, place or thing. Additionally, in order to produce the illusion of light emanating from within, various factors such as ratios of key and fill light, placement of key and fill light, and relationship of positioned key and fill light to each may be manipulated to enhance the illusion.

[0050] The system and method for modifying visual perception may be applied and utilized in a variety of formats and features. Referring now to the drawings, wherein like reference numerals denote like or corresponding parts throughout the drawings and, more particularly to FIGS. **1-34**, there are shown various embodiments of applications using lighting techniques to modify visual perception.

[0051] In one example embodiment, the system and method for modifying visual perception is applied to a camera. More particularly, the camera is targeted for general consumer use and provides both key and fill lighting features in the same camera. Referring now to FIG. **1**, a camera **10** having a lighting system **12** is shown. In one embodiment, the body of camera **10** has a round shape (as shown in FIG. **1**). However, those skilled in the art will appreciate that any style or shape of camera may be used. The lighting system **12** provides both key and fill light. The lighting system **12** shown

in FIG. **1** is illustrated as a circular-shaped light (or ring light) that surrounds the lens system **14**. However, those skilled in the art will appreciate that the lighting system **12** may be of any shape. Examples of the shape of the lighting system may include, but is not limited to, a circle, oval, triangle, square, rectangle, polygon, or any other geometric shape known to those skilled in the art. Additionally, those skilled in the art will appreciate in some embodiments, the lighting system **12** is not confined to a defined shape. More particularly, the lighting system **12** could be configured to be in the shape of a star, heart, flower or any other design that could be used to surround the lens system **14**. Additionally, in an optional embodiment (not shown), the light source may be a multi-component lighting system. For example, the lighting system could include a first light source positioned above the lens system **14** (acting as the key light) and a second light source positioned below the lens system **14** (acting as the fill light). Further, in one embodiment, the lighting system **12** is a constant light source. Optionally, in an alternate embodiment, the lighting system **12** is a flash light source. Alternately, in an optional embodiment, the lighting system **12** is configured to act as either a constant light source or a flash light source.

[0052] In FIG. **2**, a front perspective the camera **10** is shown. In one embodiment, the camera **10** includes a lens system **14**. The lens system **14** may include an auto focus lens **16** and a zoom lens **18**.

[0053] Referring now to FIG. **3**, a back perspective of the camera **10** is shown. The camera **10** includes a display **22**. Those skilled in the art will appreciate that display **22** may be a display screen of any shape, size, clarity or definition. In one embodiment, the display **22** is a LCD display. Additionally, the camera **10** includes various user input mechanisms and controls to allow the user to operate the camera. Those skilled in the art will appreciate that the input mechanisms may be in the form of buttons, dials, sliders, toggles, touch screen input, and any other known input devices. For example, in one embodiment, the camera **10** includes light temperature controls **20**, in the form of buttons, wherein a user depresses a button to select the desired particular light setting. The light temperature controls **20** may include a button for each of the following light settings: a cool light setting, a neutral light setting, a warm light setting, a sepia setting and a black and white image setting. Additionally, the camera **10** includes various other buttons to aid a user in directing camera functions. More particularly, in one embodiment, buttons **24** and **26** are provided and may be configured to operate a viewing function of the display screen **22**. For example, the user may depress buttons **24** and **26** to scroll through and view stored images. More particularly, the button **24** may scroll through the stored images in a backward direction and button **26** may scroll through the stored images in a forward direction. Additional buttons may be used to operate other features. For example, buttons **28** and **30** may be provided to allow a user to "accept" or "reject" a captured image. Those skilled in the art will appreciate that the buttons may be used to operate more than one function, and the above described examples were presented for illustrative purposes only.

[0054] Additionally, in optional embodiments, the camera **10** includes one or more control mechanisms that allow images to be recorded. Additionally, the recorded image (and associated data) maybe stored. Those skilled in the art will appreciate the recorded image is stored in a memory storage device such as, but not limited to, internal memory drive, removable memory device, external memory, flash drive, memory card and any other known device for storing data.

[0055] Additionally, the camera **10**, may also include the ability to transmit captured and/or stored images. Optionally, in one embodiment, the images may be transmitted wirelessly. Additionally, the images and/or data may be transmitted and received in real time. Further, the camera **10** may also transmit and receive streaming data. Those skilled in the art will appreciate that a processor housed within the camera **10** will control the operation of transmitting, receiving, storing and/or capturing data.

[0056] The camera **10** may include various additional control mechanisms positioned in any suitable location on the camera **10**. For example, the camera **10** may include a power switch on the outer surface of the camera **10**. Referring to FIG. **4**, an example embodiment is shown in which a power switch **40** is located on the top portion of the camera **10**. Additionally, an input mechanism **42** for controlling a zoom feature of the lens system **14** is also positioned on the top portion of the camera **10**. Those skilled in the art will appreciate that the above described control mechanisms may be located anywhere on the camera **10**. The camera **10** may further include input/output ports. For example, FIG. **5** illustrates a connection port **44** positioned on the bottom side of the camera **10**. The connection port **44** may be used to connect the camera **10** to a docking port or to a battery charger (not shown in FIG. **5**). Optionally, in one embodiment, data may be transferred to and from the camera **10** via the connection port **44**. Additionally, in an alternate embodiment, data may be wirelessly transferred to and from the camera **10**.

[0057] Alternately, in an optional embodiment, the camera **10** includes a compartment **41** for assisting in the transfer of data. In one embodiment, the compartment **41** includes a communication port for transferring data. For example, the compartment **41** may include one or more of the following: an AV out port, a firewire port, a USB port, or any other known communication port.

[0058] Referring back to FIG. **1**, in one embodiment the outer circumference area **11** of the camera **10** may include a non-slip textured grip surface **18**. The entire surface of the outer circumference area **11** may be covered in a non-slip textured grip material. Alternately, one or more portions of the outer circumference area may be covered with the non-slip textured grip surface. Additionally, the camera **10** may include a first compartment **13** for housing both a battery and a removable memory device. Optionally, in an alternate embodiment the camera **10** may include a battery compartment (not shown) and a separate memory compartment (not shown).

[0059] Additionally, the camera **10** may include the ability to capture moving images, or video. The video may be stored in a permanent memory within the camera, or optionally, the video may be stored in a portable memory device. Further, in an optional embodiment, the video may be wirelessly transferred to and from the camera **10**.

[0060] The camera **10** may further include audio capabilities and may record and play back audio data. For example, the camera **10** may include a microphone **31** (see FIG. **2**) for recording sound. Additionally, the camera **10** may include a speaker **32** (see FIG. **3**) for transmitting recorded sound. The audio may be stored on a permanent memory device, or alternately on a portable memory device. The audio data may be wirelessly transferred to and from the camera **10**.

[0061] In an optional embodiment, the lighting system **12** is a lighting system that includes multiple components. Referring to FIG. **8**, the lighting system **12** comprises a diffuser **50**, a reflector **52** and a light source **54**. The diffuser **50** assists in modifying visual perception by softening shadows and reducing contrast, thereby modifying, and enhancing the cosmetic effect of the resulting captured image. Optionally, in one embodiment, the diffuser **50** may contain color temperature correction filters, polarizing filters and multiple layers of diffusion materials that vary in intensity. A variety of materials may be used to create the diffuser, including, for example, but not limited to, glass, plastics, resins, fiberglass, ceramic or paper or any combination of these materials.

[0062] The reflector **52** is a component of the lighting system **12** that may be used to reflect light and increase brightness and contrast. Reflectors are generally very effective in boosting the power of the light source and in focusing and shaping the light itself. The reflector **52** may be composed of a variety of materials, such as, but not limited to, mirrored glass, metallic plastics, resins and highly polished metals or any combination of these compounds and materials.

[0063] Additionally, the lighting system **12** may also include screens (not shown) and/or filters (not shown) to further manipulate lighting effects. For example, the color of the resulting emitted light may be manipulated by using particular screens and/or filters. In one embodiment, a series of color correction filters corresponding to a range of colors similar to PANTONE® colors 472C, 723C, 1485C, and 1555C may be used to control and warm the light. Those skilled in the art will appreciate that the PANTONE® color reference system is frequently used to specify color by designers and printers. Those skilled in the art will appreciate that other filters of other colors may be used to control the light. For example, filters that replicate the effect of GAMPRODUCT, INC® colors 325(Bastard Amber), 328 (Tan Tone), 360 (Amber Blush), and 380 (Golden Tan) may also be used. Those skilled in the art will appreciate that GAMCOLOR® is a series of commercially available color filters used to correct motion picture and video lighting. The GAMCOLOR® filters are typically used in the form of flexible polyester gels that are applied directly to lamps in sheet form, or wrapped around fluorescent lamps in tube form. The above listed GAMCOLOR® number references represent color temperatures and hues of the actual light that may be replicated in one embodiment of the camera **10**. The camera **10** may employ filters and/or lighting to modify the coloring. Optionally, the camera **10** may capture an image, and then a microprocessor may perform a color adjustment to captured image. Additionally, in another optional embodiment, polarizing filters may also be used to add contrast and shape to the light.

[0064] The lighting system **12** also includes a light source **54**. In one embodiment, the light source **54** includes a plurality of light-emitting diodes **56** (LEDs) positioned in a circular path. Other examples of light sources may include, but are not limited to incandescent light bulbs, arc lamps, gas discharge lamps, neon lamps, flood lamps, modern photographic flashes, lasers, organic light-emitting diodes (OLEDs), sulfur lamps, and any other known light sources.

[0065] The camera **10** may be used to capture images of target subjects. In one embodiment, the camera **10** has a defined minimum and maximum target distance in order to capture optimal quality images. Optionally, in one embodiment, the optimal distance for the camera **10** to capture an image of an object/target is between one foot and seven feet. The camera **10** further includes a system for automatically modifying captured images. In one embodiment, under the control of a user, the camera **10** "takes a picture" or captures an image. The captured image is modified automatically. Optionally, in one embodiment, the captured image is automatically modified in real time. The term "real time" is used to mean occurring immediately. More particularly, the camera captures the images and responds immediately to enhance and modify the image immediately. Typically, real time can refer to events simulated by a computer at the same speed that they would occur in real life.

[0066] In one embodiment, the captured image, also referred to as the "non-manipulated capture" is examined and analyzed by the automatic modification process. The automatic modification process evaluates the non-manipulated capture and automatically adjusts various features of the image. Additionally, the automatic modification process applies an automatic overall adjustment to the entire non-manipulated capture. Further, in one example, the automatic modification process may include one or more of the following adjustments: adjusting the exposure, adjusting highlight levels, adjusting midtone levels, adjusting lowlight levels, adjusting color temperature, adjusting tint, adjusting contrast, adjusting color saturation, sharpening the detail in the highlights, diffusing the midtones, compressing the image, and elongating the image.

[0067] In one embodiment, the automatic modification process adjusts the exposure level to define shadow detail such as detail in dark hair. In one example embodiment, the automatic exposure adjustment includes increasing the exposure levels between approximately 5% and approximately 25% of the non-manipulated capture.

[0068] In one embodiment, the automatic modification process adjusts the highlight levels to brighten the lightest areas in the captured image, such as the shine on the skin of a person. In one example embodiment, the automatic highlight level adjustment includes increasing the highlight levels between approximately 5% to approximately 10% of the non-manipulated capture.

[0069] In one embodiment, the automatic modification process adjusts the midtone levels to brighten "middle tone" areas such as skin tone. In one example embodiment, the automatic midtone level adjustment includes increasing the midtone levels between approximately 5% to approximately 10% of the non-manipulated capture.

[0070] In one embodiment, the automatic modification process adjusts the lowlight levels to darken the deepest areas of exposure such as the dark pupil of the eye. In one example embodiment, the automatic lowlight level adjustment includes decreasing the lowlight levels between approximately 5% to approximately 10% of the non-manipulated capture.

[0071] In one embodiment, the automatic modification process adjusts the color temperature to create a golden color quality. For example, the color temperature may be adjusted to create the effect of warming the skin tone with golden hues. In one example embodiment, the automatic color temperature adjustment includes increasing the yellow tones between approximately 50% to approximately 150% of the non-manipulated capture, and thereby decreasing the blue tones between approximately 50% to approximately 150% of the non-manipulated capture. Optionally, in an alternate embodi-

ment, the automatic color temperature adjustment is performed in combination with an adjustment of the tint.

[0072] In one embodiment, the automatic modification process adjusts the tint to decrease red tones and increase green tones. Optionally, the automatic tint adjustment may be performed in combination with the color temperature adjustment to produce a golden color quality in a picture. In one example embodiment, the automatic tint adjustment includes decreasing the red tones (and thereby increasing the green tones) between approximately 5% to approximately 10% of the non-manipulated capture.

[0073] In one embodiment, the automatic modification process adjusts the contrast of the overall image. The contrast controls the differential between light and dark tones. In one example embodiment, the automatic contrast adjustment includes increasing the contrast between approximately 50% to approximately 150% of the non-manipulated capture. Optionally, the automatic contrast adjustment may be performed in combination with an adjustment of the color saturation and/or an automatic diffusion modification in order to produce a more colorful and vivid picture.

[0074] In one embodiment, the automatic modification process adjusts the color saturation of an image. The color saturation controls the amount of color in an image. Generally, as saturation increases, colors tend to take on a kind of neon look. As saturation decreases, colors tend to approach a gray. In one example embodiment, the automatic color saturation adjustment includes increasing the color saturation between approximately 50% to approximately 150% of the non-manipulated capture. Optionally, the automatic color saturation adjustment may be performed in combination with a contrast adjustment and/or an automatic diffusion modification in order to produce a more colorful and vivid picture.

[0075] In one embodiment, the automatic modification process includes an automatic diffusion modification which softens the midtone areas, such as the skin. In one example, diffusing the midtones produces the effect of smoothing and softening the appearance of skin texture. In one example embodiment, the automatic diffusion modification diffuses midtones between approximately 5% to approximately 100% of the non-manipulated capture. Optionally, in an alternate embodiment, midtone diffusion is performed in combination with a contrast adjustment and/or color saturation adjustment.

[0076] In one embodiment, the automatic modification process includes automatic highlight sharpening which sharpens the detail in the brightest of the highlight areas. In other words, the appearance of extra sharpness is added only to the brightest parts of the exposure, such as highlights and light reflections in the eyes and teeth. In one example embodiment, the highlight sharpening is increased between approximately 5% to approximately 10% of the non-manipulated capture.

[0077] In one embodiment, the automatic modification process includes an image compression function. For example, the image may be compressed, or squeezed, horizontally (or in one example, compressed along the x-axis) so that people or objects in the resulting compressed image appear slimmer. In one example embodiment, the image is compressed between approximately 5% to approximately 10% of the non-manipulated capture.

[0078] In one embodiment, the automatic modification process includes an image extension function. For example, the image may be elongated, or extended, vertically (or in one example, elongated along the y-axis) so that people or objects in the image appear stretched or elongated, thus appearing taller. In one example embodiment, the image is extended between approximately 5% to approximately 10% of the non-manipulated capture.

[0079] Those skilled in the art will appreciate that the automatic modification process may include additional automatic features. For example, in one embodiment, the hue may be automatically modified. Alternately, in another example embodiment, the luminance, or brightness of color, may be automatically modified. Additionally, in an optional embodiment, the image reflectivity may also be automatically modified. In another optional embodiment, the transparency parameter may be automatically modified.

[0080] Additionally, in one embodiment, the automatic modification process may be configured to achieve a particular visual look or appearance. In one example embodiment, the camera **10** is may be used to capture close-up shots and/or wide-shots, and the camera **10** may be configured to automatically modify the captured images to obtain a particular look. Generally, a close-up shot closely frames an object, such as a human figure, such that only the portion of the person from the waist or chest up is included in the frame. Additionally, the close-up shot may include just the face of a person. A wide-shot (also called a long shot) typically shows the entire object or human figure and is usually intended to place it in some relation to its surroundings. In one example embodiment, the camera **10** is used to capture a close-up shot of an image such that the resulting captured image is automatically modified and appears to have a peach-golden look. Those skilled in the art will appreciate that the "peach-golden look" is illustrated below by way of example only and not by way of limitation. In one example, the camera **10** captures a close-up shot and the automatic modification process automatically increases the exposure level of the captured image by approximately 10%, increases the highlight levels of the captured image by approximately 7%, increases the midtone levels of the captured image by approximately 7%, decreases the lowlight levels of the captured image by approximately 7%, adjusts the color temperature by increasing the yellow tones (and thereby decreasing the blue tones) by approximately 75%, adjusts the tint by decreasing the red tones (and thereby increasing the green tones) by approximately 7%, increases the contrast by approximately 75%, increases the color saturation by approximately 75%, diffuses the midtones by approximately 50%, increases the highlight sharpening by approximately 7%, compresses the image by approximately 5%, and extends the image by approximately 5%.

[0081] Alternately, in another example embodiment, the camera **10** is used to capture a wide-shot image such that the resulting captured image is automatically modified and appears to have a peach-golden look. Those skilled in the art will appreciate that the "peach-golden look" is illustrated below by way of example only and not by way of limitation. In this example, the camera **10** captures a wide-shot and the automatic modification process automatically increases the exposure level of the captured image by approximately 7%, increases the highlight levels of the captured image by approximately 5%, increases the midtone levels of the captured image by approximately 5%, decreases the lowlight levels of the captured image by approximately 5%, adjusts the color temperature by increasing the yellow tones (and thereby decreasing the blue tones) by approximately 50%, adjusts the tint by decreasing the red tones (and thereby increasing the green tones) by approximately 5%, increases the contrast by

approximately 50%, increases the color saturation by approximately 50%, diffuses the midtones by approximately 25%, increases the highlight sharpening by approximately 5%, compresses the image by approximately 2.5%, and extends the image by approximately 2.5%.

[0082] In one optional embodiment, the peach-golden look appears to include colors and hues in the range of peach, golden and nude tones. Examples of such colors and tones include, but are not limited to, PANTONE® colors 472C, 723C, 1485C, and 1555C. Likewise, the following listed GAMCOLOR® numbers refer to commercially available colors and hues in range of peach, golden and nude tones that may be used to replicate the color temperature and hue produced in one embodiment of the peach-golden look: 325 (Bastard Amber), 328 (Tan Tone), 360 (Amber Blush), and 380 (Golden Tan). Those skilled in the art will appreciate that additional colors and/or any combination may of course be used.

[0083] Those skilled in the art will appreciate that the lighting and automatic modification process may be manipulated and controlled to achieve various other looks. For example, a yellow-green look may be automatically produced. One embodiment of the yellow-green look may appear to include colors and hues in a range of yellow, green and olive tones. Examples of such colors and tones include, but are not limited to, PANTONE® colors 108C, 111C, 116C, and 1485C. Likewise, the following GAMCOLOR® numbers are examples of colors and hues in the range of yellow, green and olive tones that may be used to replicate the color temperature and hue produced in one embodiment of the yellow-green look: 385 (Light Amber), 450 (Saffron), and a combination of 455 (Yellow Sun) and 570 (Light Yellow Green). Those skilled in the art will appreciate that additional colors and/or any combination may of course be used.

[0084] In another example, a turquoise look is automatically produced. One embodiment of the turquoise look may appear to include colors and hues in a range of turquoise, lavender, and nude tones. Examples of such colors and tones include, but are not limited to, PANTONE® colors 3125C, 3115C, 5025C, and 530C. Likewise, the following GAMCOLOR® numbers are examples of colors and hues in the range of turquoise, lavender, and nude tones that may be used to replicate the color temperature and hue produced in one embodiment of the turquoise look: 690 (Bluegrass), 725 (Princess Blue), 980 (Surprise Pink), and 328 (Tan Tone). Those skilled in the art will appreciate that additional colors and/or any combination may of course be used.

[0085] In another illustrative example, a blue-brown-rose look may be automatically produced. One embodiment of the blue-brown-rose look may appear to include colors and hues in a range of blue, brown, and rose tones. Examples of such colors and tones include, but are not limited to, PANTONE® colors 2915C, 479C, 480C, and 4625C. Likewise, the following GAMCOLOR® numbers are examples of colors and hues in the range of blue, brown, and rose tones that may be used to replicate the color temperature and hue produced in one embodiment of the blue-brown-rose tones look: 785 (Beverly Blue), 780 (Shark Blue), 328 (Tan Tone), and 330 (Sepia). Those skilled in the art will appreciate that additional colors and/or any combination may of course be used.

[0086] Referring back to the camera **10**, once a "picture is taken," the resulting image shown on the display screen **22** is an enhanced image, or modified, as it has been automatically modified by one or more of the features described above.

[0087] In one example, the camera **10** is used to capture portrait-style photographs of a person. Typically, the camera **10** captures images of a person or persons. Additionally, the camera captures images of a person in a close range distance from the camera. In one embodiment, the optimal distance of the person from the camera is between approximately one and approximately seven feet. However, in an alternate embodiment, the range may be greater.

[0088] Once the user is ready to take a picture, the user aims the camera **10** at the subject and "snaps" the shot. In one example, the camera **10** is a classic "point and shoot" digital camera. Optionally, the camera **10** may be a DSLR (digital single lens reflex) camera. Optionally, in an alternate embodiment the camera **10** also includes video capability and may capture video images as well as still images. Alternately, in an optional embodiment, the camera **10** is a video camera. Further, the lighting system **12** generally acts as a constant light source when capturing video. Additionally, in an optional embodiment, the camera **10** may also include audio capability and may capture images as well as audio recordings. Optionally, the camera **10** may capture video images and audio recordings. Further, the camera **10** also includes a playback feature for displaying captured video. In one embodiment, the captured video may be displayed on the display **22**. A microphone **31** captures and records sound. Subsequently, a speaker **32** is an outlet for transmitting the recorded sound back to the user.

[0089] Once the user has taken a picture, the captured image is then automatically modified in real time and displayed on the display screen **22** of the camera **10**. As described above, the real time modifications may include squeezing or compressing the image so that the subject in the image appears slimmer. The real time modification may also include stretching or elongating the image so that the subject in the image appears taller. Further, as described in detail above, other automatic, real time modifications may include automatically manipulating the image so that the mid-tones are diffused (particularly in skin tone areas where the subject is a human), the highlights are sharpened and gold tones may be added. Optionally, in another embodiment, peach golden tones may be added. Additionally, the image may be manipulated by automatically altering brightness levels, contrast and/or the color temperature. The manipulation of the captured image is done automatically in real time so that the captured image presented on the camera display **22** is presented in a modified format and does not require any further input, choices, selections, or decisions from the user. The camera **10** may work in conjunction with a post production system (not shown) that allows for further modification of the captured images. In one embodiment, the post production system includes a software application for use on a computer to be used in combination with the camera **10**.

[0090] Additionally, in an optional embodiment, the camera **10** further includes an automatic audio modification feature that allows the camera **10** to automatically modify the captured audio data. More particularly, the automatic audio modification feature works in conjunction with a camera **10** that captures moving images (i.e., video images). The automatic audio modification feature may include an equalizer, audio leveler and filter. The equalizer correctly balances high, mid and low ranges areas of the captured audio recording and amplifies midrange for greater clarity.

[0091] The filter automatically reduces ambient noise to allow for the cleanest possible voice recording. Additionally,

in captured voice recordings, the filter softens hard consonants such as "ch" or "k" sounds and adds crispness to sibilant sounds such as "s", "es", or "is" at the end of words.

[0092] The automatic audio leveler automatically adjusts voice recording and broadcast levels. More particularly, the automatic leveler adjust the voice recording by reacting to the user's voice and to the volume changes as the user moves closer or further from the microphone. In one embodiment, the optimal distance of the user from the microphone is from approximately one to approximately seven feet.

[0093] In one embodiment, the camera **10** is configured for use as a portrait style camera to capture pictures of people at close range (e.g. 1 to 7 feet). The camera **10** provides an automatic modification feature that captures images, analyzes the captured images and then employs the necessary adjustments to produce and display photographs, without requiring the user to make any choices, selections or decisions. In one embodiment, the automatic modification feature includes a microprocessor (not shown) embedded in the camera **10**. The microprocessor analyzes the received images, and facilitates the process for modifying and adjusting the images as needed, in real time.

[0094] Alternately, in an optional embodiment, the camera **10** further includes a sensor (not shown) operatively connected to the microprocessor. The sensor reads the skin type of a person or persons about to be photographed. In one example embodiment, the sensor is configured to detect and sense particular qualities of skin from a target image. In particular, the sensor may detect skin coloring, skin type or other skin features and then use the information to adjust the coloring of the lighting system **12** to emit a light that is favorable and flattering to the targeted image. Optionally, in an alternate embodiment, a microprocessor (not shown) is operatively connected to the sensor. The microprocessor performs digital color enhancements to the non-manipulated capture as a direct result of skin data received from the sensor.

[0095] In an alternate embodiment, the camera **10** may be used to take pictures of non-human subjects. The camera **10** provides an automatic modification feature that produces visually modified photographs. The camera **10** may be used to take pictures of pets, scenic images, interiors, objects and any other subjects.

[0096] In another embodiment, the system and method for modifying visual perception is employed in a video mirror. Referring to FIG. **9**, a video camera mirror system **110** is shown. A lighting system **112** provides both key and fill light. In one embodiment, the lighting system **112** surrounds a circular shaped video display **122**. Those skilled in the art will appreciate that the video display **122** may be of any shape or size, and the lighting system **112** may be positioned to "surround" a video display **122** of any shape. Additionally, the lighting system **112** may be of any shape, including but not limited to, a circle, square, rectangle, triangle, oval or polygon. Additionally, in an optional embodiment (not shown), the light source may be a multi-component lighting system. For example, the lighting system could include a first light source positioned above the video display **122** (acting as the key light) and a second light source positioned below the video display **122** (acting as the fill light). Further, in one embodiment, the lighting system **112** is a constant light source. Optionally, in an alternate embodiment, the lighting system **112** is a flash light source. Alternately, in an optional embodiment, the lighting system **112** is configured to act as either a constant light source or a flash light source.

[0097] Additionally, in an optional embodiment, the video display **122** is a high definition video screen display. The combined lighting system **112** and video display **122** may attach to a stand and base combination. Additionally, the video camera mirror system **110** is configured to appear as a mirror to a user. More particularly, the video display **122** mimics a mirror and provides a simulated reflection of the targeted subject. For example, when a user is positioned in front of the video mirror **110**, an embedded camera captures the user's image as video and presents the captured video images on the display screen **122**, thus simulating a mirror's reflection. A processing means (not shown) operatively connected to the video camera mirror system **110** automatically modifies the captured video images in real time and presents the modified video to the user on the video display **122**.

[0098] In one embodiment, a processor evaluates the captured video images and automatically adjusts various features of the video. For example, the automatic modification process may include one or more of the following adjustments to the captured video: adjusting the exposure, adjusting highlight levels, adjusting midtone levels, adjusting lowlight levels, adjusting color temperature, adjusting tint, adjusting contrast, adjusting color saturation, sharpening the detail in the highlights, diffusing the midtones, compressing video images, and elongating video images. The example automatic adjustments were described in great detail above in the camera embodiment and may be applied in a similar fashion to the video camera mirror system **110**. The video camera mirror system **110** may capture still images and the processor may automatically adjust the still image. Additionally, the video camera mirror system **110** may also capture moving images (or video images) and the processor may automatically adjust the moving images, or video images, in real time.

[0099] The video camera mirror system **110** may also capture and record audio. Additionally, the video camera mirror system **110** may also include an automatic audio modification feature that automatically modifies captured audio data. The automatic audio modification feature may include an equalizer, audio leveler and filter, similar to that described in the camera **10** embodiments above.

[0100] Referring to FIG. **11**, in one embodiment, the lighting system **112** is a lighting system that includes multiple components, such as a diffuser **150**, a reflector **152** and a light source **154**. The diffuser **150** assists in modifying visual perception by softening shadows and reducing contrast, thereby modifying and enhancing the cosmetic effect of the resulting captured image. Optionally, in one embodiment, the diffuser **150** may contain color temperature correction filters, polarizing filters and multiple layers of diffusion materials that vary in intensity. A variety of materials may be used to create the diffuser **150**, including, for example, but not limited to, glass, plastics, resins, fiberglass, ceramic or paper or any combination of these materials.

[0101] The reflector **152** is a component of the lighting system **112** that may be used to reflect light and increase brightness and contrast. In one embodiment, the reflector **152** assists in boosting the power of the light source **154** and in focusing and shaping the light itself. The reflector **152** may be composed of a variety of materials, such as, but not limited to, mirrored glass, metallic plastics, resins and highly polished metals or any combination of these compounds and materials.

[0102] Additionally, the lighting system **112** may also include screens (not shown) and/or filters (not shown) to further manipulate lighting effects. For example, the color of

the resulting emitted light may be manipulated by using particular screens and/or filters. In one embodiment, a series of color correction filters corresponding to a range of colors similar to PANTONE® colors 472C, 723C, 1485C, and 1555C may be used to control and warm the light. Those skilled in the art will appreciate that the PANTONE® color reference system is frequently used to specify color by designers and printers. Those skilled in the art will appreciate that other filters of other colors may be used to control the light. For example filters that replicate the effect of GAMPRODUCT, INC® colors 325 (Bastard Amber), 328 (Tan Tone), 360 (Amber Blush), and 380 (Golden Tan) may also be used. Those skilled in the art will appreciate that GAMCOLOR® is a series of commercially available color filters, used to correct motion picture and video lighting. The GAMCOLOR® filters are typically used in the form of flexible polyester gels that are applied directly to lamps in sheet form, or wrapped around fluorescent lamps in tube form. The above listed GAMCOLOR® number references represent color temperatures and hues of the actual light that may be replicated in one embodiment of the video camera mirror system **110**. The video mirror system **110** may employ filters and/or lighting to modify the coloring. Optionally, the cosmetic case **210** may capture an image, and then a microprocessor may perform a color adjustment to captured image. Additionally, in another optional embodiment, polarizing filters may also be used to add contrast and shape to the light.

[0103] The lighting system **112** also includes a light source **154**. In one embodiment, the light source **154** includes a plurality of LEDs **156** positioned in a circular path around the display screen **122**. Other examples of light sources may include, but are not limited to incandescent light bulbs, arc lamps, gas discharge lamps, neon lamps, flood lamps, modern photographic flashes, lasers, organic light-emitting diodes (OLEDs), sulfur lamps, and any other known light sources.

[0104] The video camera mirror system **110** includes a stand **114** connected to a base **116**. The stand **114** is pivotally connected to the back of the video display **122**, thereby permitting adjustment of the position of the video display **122**. Optionally, in an alternate embodiment, a hinge attaches the stand **114** to the back of the video display **122**, thereby allowing for angle adjustment to accommodate a user. Optionally, in an additional embodiment, the stand **114** allows for height adjustment to accommodate a user peering into the video camera mirror system **110**. Additionally, the stand **114** may include a wired connection **118**. The wired connection **118** may provide power to the video camera mirror system **110**. Additionally, the wired connection **118** may provide a communication interface for transferring data. Optionally, in an alternate embodiment, the wired connection **118** may be positioned on the base **116** (not shown). Alternately, in an optional embodiment, the stand **114** may include a wireless transmitter (not shown) for wireless communication. The video display **122** further includes an embedded camera **128**. In one embodiment, the embedded camera is positioned in the center of the video display **122**. Alternately, in an optional embodiment, the embedded camera **128** may be positioned anywhere within the video display **122**.

[0105] Referring back to FIG. **10**, a control mechanism **121** is positioned on the back side of the video camera mirror system **110**. The control mechanism **121** may provide such features as a power switch **140**, light temperature controls **120**, and a secondary display **123**. In one embodiment, the light temperature controls **120** include a button for each of the following settings: a cool light setting, a neutral light setting, and a warm light setting. In an optional embodiment, the light temperature controls **120** also include additional buttons for a sepia setting and a black and white image setting. In FIG. **10**, the light temperature controls **120** are in the form of buttons, wherein a user depresses a button to select the desired particular setting. Those skilled in the art will appreciate that the temperature controls may be in the form of dials, sliders, touch screen input, and any other known input mechanism. The control mechanism **121** may include additional input mechanisms for controlling particular functions of the video camera mirror system **110**. For example, in one embodiment, the control mechanism **121** includes a button **124** and a button **126** to allow a user to select between a "still mode" and a "movie mode." In one example, if the user selects "still" mode the video camera mirror system **110** captures one or more "still" images (or static images) of a subject. Alternately, if a user selects "movie mode" the video camera mirror system **110** captures moving images of the subject for a particular amount of time.

[0106] In one embodiment, the video camera mirror system **110** also records audio. In one example, when the video camera mirror system is in "movie mode," both moving images and audio are captured. In one embodiment, the video camera mirror system **110** includes a microphone system (not shown), wherein a microphone is embedded in the frame that surrounds the display **122**. In an optional embodiment, microphones may be placed in the environment around the mirror, for example on or near a chair, on or near a counter, and in headsets to capture the audio in greater detail within a larger scope of area. Additionally, in another embodiment, speakers (not shown) are embedded within the video camera system **110**. Optionally, in an alternate embodiment, speakers (not shown) are operatively connected to the video camera mirror system **110**. The speakers may be connected via a wire connection, or optionally, via a wireless connection.

[0107] In one embodiment, the video camera mirror system **110** includes a second display. More particularly, as illustrated in FIG. **10**, a secondary display **123** is positioned on the back of the video camera mirror system **110**. The secondary display **123** is depicted as rectangular in shape. However, those skilled in the art will appreciate that the secondary display **123** may be configured as a screen of any shape or size. The secondary display **123** presents real time images captured by the embedded camera **128**. In contrast, the video display **122** positioned on the front side of the video camera mirror system **110** presents mirror-images of the captured images (as well as a mirror-image of the image presented on secondary display **123**).

[0108] The video camera mirror system **110** also includes an automated modification feature. The real time image presented in display **123** is a modified image. Additionally, the real time mirror-image presented in video display **122** is an enhanced mirror-image. In one example, the targeted subject is positioned in front of the video display **122**. A user may operate the control mechanism **121** and select a still image mode or a movie mode. For illustrative purposes, in this example the user selects the movie mode. The video camera mirror system **110** then proceeds to capture moving images of the targeted subject. As the video camera captures the images, the captured images are displayed as a reflection of the subject, in real time on the video display **122**. Likewise, the captured images are also displayed in real time on the secondary display **123**. Additionally, the captured images are

presented as modified images. In one embodiment, an automated modification feature automatically modifies the displayed images. The video camera mirror system **110** also captures audio data. Additionally, the captured audio data may be automatically modified, as described above.

[0109] In an alternate embodiment, the video camera mirror system **110** includes input mechanisms allowing the user to manipulate the resulting captured image(s). Optionally, the video camera mirror system **110** may work in conjunction with a post production system (not shown) that allows for further modification of the captured images. Additionally, the post production system may allow for further modification, editing and/or enhancement of the recorded audio data. In one embodiment, the post production system includes a software application that aids the user in modifying captured data, including data in the form of still images, moving images and audio date.

[0110] The video camera mirror system **110** may record and store the captured images. In one embodiment, the recorded video is transferred to a portable medium. For example, the recorded video may be copied to a disk or other portable memory means. Optionally, the recorded video may be transferred via a network connection to an electronic mail account. Likewise, the recorded video may be transferred and stored to a database. A user may be given the ability to access the database and in particular to access a specific recorded video.

[0111] The video camera mirror system **110** may include the ability to transmit and receive data, including images. Optionally, in one embodiment, the data may be transmitted wirelessly. Additionally, the images and/or data may be transmitted and received in real time. Further, the video mirror camera system **110** may also transmit and receive streaming data. Those skilled in the art will appreciate that a processor housed within the camera **10** will control the operation of transmitting, receiving, storing and/or capturing data.

[0112] It is important to note that even though the captured images are initially presented on a display **122**, the captured images may be viewed later on a different media viewer or display. Additionally, even though FIG. **9** illustrates the display **122** as a circular-shaped display, those skilled in the art will appreciate that the display **122** may be of any shape or size. Further, those skilled in the art will appreciate that the captured images may be viewed later on a media viewer of display of a different shape and size from that of the display **122**. More particularly, in one example, a user may view the recorded at a later time on a rectangular-shaped display screen, even though the captured data was initially presented to the user on a circular-shaped display **122**.

[0113] In one embodiment, the video camera mirror system is used at a cosmetic counter. For example, the cosmetic counter may be located within a department store. A customer may approach the cosmetic counter for a cosmetic demonstration, including the application of cosmetics to his or her face. The video camera mirror system **110** is configured to capture and record the cosmetic demonstration. The images captured and recorded by the video camera mirror system **110** are modified images, as described above. Additionally, the video camera mirror system **110** may record audio as well as visual data. Once the cosmetic demonstration has finished, the customer may be given a copy of the recorded video on a portable medium, such as a compact disk. Alternately, a copy of the recorded video may be sent to the customer's email address. In an optional embodiment, a copy of the recorded video is stored on a designated website. The customer may create a user account in association with the designated website, and then be permitted to access the recorded video stored on the designated website. Once the customer accesses the recorded video, it may be presented to the customer in a different format and/or shape. For example, the customer may have initially viewed a simulated mirror-reflection of the demonstration in a circular-shaped display at the cosmetic counter. However, once the customer accesses the recorded video at a later date, the recorded images may be presented the customer on a rectangular or square-shaped display.

[0114] In an optional embodiment, the demonstration video is made available to a customer on a dedicated website that is password protected. The website includes an easy to use interface that leads the customer to the website's representations of specific products and services that were performed in the demonstration. This allows the customer to review the products that were used, allows the customer quick and easy access to a link to purchase the products online, and provides the customer with a link to send to others, including friends. In one embodiment, the website provides a system that records the customers'preferences and creates customer profiles based on: products demonstrated; customer interviews performed by the demonstrating makeup artist based on an established set of criteria; and by online questionnaire (s) answered by customers themselves.

[0115] Additionally, the video camera mirror system **110** may also display other data and imagery in addition to the simulated mirror reflection. For example, the display **122** may present a logo or other pictures on the display screen **122**. Additionally, the display **122** may also present pre-recorded video such as, but not limited to, beauty product demonstrations, advertising clips, entertainment, and other imagery designed to captivate and draw the attention of a consumer. Optionally, any type of media may be presented on the display **122**.

[0116] In an alternate embodiment, the cosmetic counter further includes a private compartment, configured to seat a customer in an enclosed and sheltered environment during a cosmetic demonstration. The private compartment provides the capability of controlling and manipulating lighting in the sheltered environment. Referring to FIG. **12**, an enclosed chair **301** is illustrated. The enclosed chair **301** is enclosed on the back, sides and roof, thereby providing privacy and, additionally preventing other, competing light sources from lighting a user sitting in the enclosed chair **301**. The video camera mirror system **110** is positioned in the appropriate proximate space in front of the chair **301** to capture the cosmetic demonstration of a person sitting in the enclosed chair **301**. Additionally, the lighting system **112** of the video camera mirror system **110** acts as a light source for the user sitting in the chair **301**.

[0117] In one embodiment, the chair **301** includes a seat **302**. In an optional embodiment, the seat **302** is composed, at least in part, of memory foam cushion. Additionally, the seat **302** may be insulated to reduce ambient noise. The seat **302** may be designed as an extra wide seat to accommodate all body types. Additionally, the seat **302** may be designed to accommodate multiple bodies. In an alternate embodiment, the seat **302** includes a four-way adjustable leg and foot rest. The seat **302** may also include an adjustable head rest. The height of the seat **302** may also be adjusted. A control panel **303** is located on an arm of the seat **302**. The control panel allows for adjustment of the seat height **302** as well as adjust-

ment of the leg and foot rest, and adjustment of the head rest. In an optional embodiment, the chair **301** includes audio speakers **305**. The audio speakers **305** may be located on both sides of the seat **302**. A control (not shown) may be provided to allow the user to operate the audio speakers **305**. Additionally, the audio speakers **305** may be controlled via a remote control device, or via a remote device physically located away from the chair **301**. Optionally, in an additional embodiment, the chair **301** may also provide one or more microphones to assist in recording sound.

[0118] In an optional embodiment, the chair **301** includes a scent diffuser **306**, wherein various scents may be used for olfactory stimulation. The chair **301** may also include a vent **304** to aid in regulating the temperature within the chair. For example, the vent **304** may be an air conditioning vent and/or a heating vent.

[0119] In one embodiment, a user (or customer) sits in the chair **301** and a salesperson demonstrates makeup application and techniques. A video camera mirror system **110** is positioned in front of the person sitting in the chair **301** and records the demonstration. Both audio and visual aspects of the demonstration may be recorded. Additionally, the person sitting in the chair **301** may view the demonstration in the "mirror-like" screen of video display **122** during the demonstration. Once the demonstration is over, a copy of the recorded demonstration may be provided to the customer via one of the means previously described above. Additionally, the person sitting in the chair views the demonstration in a round display **122**. However, the copy of the demonstration given to the person may be played back in a viewer or media player of different shape and size.

[0120] Multiple chairs **301** may be arranged around a cosmetic counter, or some other central focal point. For example, FIG. **13** illustrates multiple enclosed chairs **301** placed around a counter area **199**. A video mirror display **110** is placed on the counter **199** in front of each chair **301**. Additionally, in an optional embodiment, a chandelier **195** is positioned over the counter **199** and the chandelier **195** acts as a key light. Additionally, in another optional embodiment, the counter **199** includes an inset countertop light that acts as a fill light.

[0121] In an optional embodiment, the video camera mirror system **110** is used with a pod seating system. In FIG. **14**, a pod **350** is shown. The pod **350** includes a seat **352**, which may be composed of a memory foam cushion. Additionally, the seat **352** may be insulated to reduce ambient noise. The seat **352** may be designed as an extra wide seat to accommodate all body types, and to accommodate multiple bodies at one time.

[0122] The pod **350** includes a control panel **353**. The control panel **353** may be used to adjust the seat **352**, the head rest **358**, and the foot rest **359**. Additionally, a control mechanism **307** may be used to adjust the height of the seat **352**.

[0123] The pod **350** may also include audio speakers **305**, which may be placed on each side of the seat **352**. Optionally, the pod **350** may also provide one or more microphones (not shown) to assist in recording sound.

[0124] The pod **350** may include a scent diffuser **306**, wherein various scents may be used for olfactory stimulation. The pod **350** may also include a vent **304** to aid in regulating the temperature within the area of the pod **350**. For example, the vent **304** may be an air conditioning vent and/or a heating vent.

[0125] FIG. **15** illustrates an alternate view of the pod **350**. More particularly, a video camera mirror system **370** is positioned in the pod **350** opposite the seat **352**. The video mirror **370** includes a lighting system **372** surrounding a video display **374**. A camera (not shown) may be positioned or embedded behind the video display **374**. The video camera mirror system **370** functions similarly to the video camera mirror system **110** previously disclosed. More particularly, the video display **374** mimics a mirror and provides a simulated reflection of the targeted subject. For example, when a user is positioned in front of the video mirror **370**, the embedded camera captures the user's image as video and presents the captured video images on the display screen **374**, thus simulating a mirror's reflection.

[0126] The pod **350** further includes a product display shelf **362** and customer storage areas **363** and **364**.

[0127] In one embodiment, the pod **350** may be used to facilitate cosmetic demonstrations. In an alternate embodiment, the pod **350** acts as a telecommunication port. More particularly, the video camera mirror system **110** may send and receive multiple types of data, including, but not limited to, visual data and audio data. The video camera mirror system **110** is connected to a communications network to facilitate the transfer of data. Additionally, in one embodiment, the video camera mirror system **110** is connected to a telecommunications network, thereby permitting and enabling the transmission of data to and from various communication portals. In one embodiment, the video camera mirror system **110** is used as a communication portal. For example, a user can position herself or himself in front of the video camera mirror system **100**. The embedded camera **128** captures images of the user (moving and/or still images). The captured images (in the form of data) are transported to a recipient communication device (not shown) and displayed on a recipient device to a recipient located elsewhere. Additionally, the video camera mirror system **110** also captures and records audio date, and likewise facilitates the transmission of the audio data along with the visual data.

[0128] In the pod **350**, the display **122** may present multiple display windows. For example, the display **122** may include a first window to present the mirror image of the user. Additionally, the display **122** may also include a second window to present the image of another person (located elsewhere) with whom the user is communicating. In an optional embodiment, the pod user may communicate with multiple people at the same time. In one example, the images of all recipients may be presented in separate windows on the display **122**. Additionally, the pod **350** may be configured to comfortably hold more than one person.

[0129] Further, in another optional embodiment, the pod **350** may comprise one or more lighting elements (not shown) within the pod. The lighting elements may be controlled to manipulate the visual perception of a person sitting in the pod **350**. Additionally, the lighting may be controlled to manipulate the effect of illuminated light on the person sitting in the pod **350**. Various filters and lighting techniques may be employed to achieve various lighting results. For example, the following GAMCOLOR® numbers refer to commercially available colors and hues in range of golden and peach tones that may be used to create a golden visual appearance in the pod: 325 (Bastard Amber), 328 (Tan Tone), 360 (Amber Blush), and 380 (Golden Tan). Those skilled in the art will appreciate the above list is intended as merely illustrative and is not intended as a limiting list. Further, additional examples

of golden and peach hues may be demonstrated by Pantone® colors 472C, 723C, 1485C, and 1555C. Those skilled in the art will appreciate that the above example color references may be achieved via application through a light source or via processing of a captured image data through a digital filtration system.

[0130] In another embodiment, the system and method for modifying visual perception is applied to a cosmetic case. Referring to FIG. **16**, a cosmetic case **210** having a lighting system **212** is shown. In one embodiment, the cosmetic case **210** has a round shape (as shown in FIG. **16**). However, those skilled in the art will appreciate that any style or shape of cosmetic case may be designed and used. The cosmetic case **210** includes a top cover **214** pivotally attached to a bottom cover **216**. In one embodiment, the top cover **214** is attached to the bottom cover **216** via a hinge **218** (see FIG. **17**). Those skilled in the art will appreciate that other mechanisms may be used to moveably attach the top cover **214** to the bottom cover **216**.

[0131] As shown in FIG. **16**, the top cover **214** includes a mirror **220**. In one embodiment, the mirror **220** is round. However, the mirror **220** may be configured and designed to be of any shape, size and style. The mirror **220** may include a video camera mirror system as described above. Alternately, the mirror **220** may include a traditional type mirror without the video capability.

[0132] The lighting system **212** provides both key and fill light. The lighting system **212** shown in FIG. **16** is illustrated as a circular-shaped light that surrounds the mirror **220**. However, those skilled in the art will appreciate that the light source may be of any shape, size and style. For example, in one embodiment, the light source may be a square-shaped light source (not shown) that surrounds the mirror **220**. Additionally, in an optional embodiment (not shown), the light source may be a multi-component lighting system. For example, the lighting system could include a first light source positioned above the mirror **220** (acting as the key light) and a second light source positioned below the mirror **220** (acting as the fill light). Further, in one embodiment, the lighting system **212** is a constant light source. Optionally, in an alternate embodiment, the lighting system **212** is a flash light source. Alternately, in an optional embodiment, the lighting system **212** is configured to act as either a constant light source or a flash light source.

[0133] The bottom cover **216** includes an interchangeable pan **217***a*. The interchangeable pan may contain cosmetic contents, such as powder, blush, foundation, eye makeup, etc. Additionally, the interchangeable pan **217***a* is configured to be removable from the bottom cover **216** and may be replaced with a replacement pan **217***b*. Further, the interchangeable pan may further hold or contain an application sponge **219**. Optionally, the interchangeable pan may also hold a powder puff or other application tool.

[0134] In one embodiment, the light settings on the lighting system **212** are adjustable. For example, the brightness or intensity level of the light may be adjusted. Further, the actual color of the light may be adjusted. Optionally, the color of the light may be pre-selected.

[0135] In an optional embodiment, the lighting system **212** includes multiple components. For example, the lighting system **212** may comprise a diffuser **250**, a reflector **252** and a light source **254**. The diffuser **250** assists in modifying visual perception by softening shadows and reducing contrast, thereby modifying and enhancing the cosmetic effect of the resulting captured image. Optionally, in one embodiment, the diffuser **250** may contain color temperature correction filters, polarizing filters and multiple layers of diffusion materials that vary in intensity. A variety of materials may be used to create the diffuser **250**, including, for example, but not limited to, glass, plastics, resins, fiberglass, ceramic or paper or any combination of these materials.

[0136] The reflector **252** may be used to reflect light and increase brightness and contrast. Additionally, the reflector **252** may be effective in boosting the power of the light source **254** and in focusing and shaping the light itself. The reflector **252** may be composed of a variety of materials, such as, but not limited to, mirrored glass, metallic plastics, resins and highly polished metals or any combination of these compounds and materials.

[0137] The light source **254** includes a plurality of LEDs **256** positioned in a circular path. Other examples of light sources may include, but are not limited to incandescent light bulbs, arc lamps, gas discharge lamps, neon lamps, flood lamps, modern photographic flashes, lasers, organic light-emitting diodes (OLEDs), sulfur lamps, and any other known light sources.

[0138] In one optional embodiment, the lighting system **212** may also include screens (not shown) and/or filters (not shown) to further manipulate lighting effects. For example, the color of the resulting emitted light may be manipulated by using particular screens and/or filters. In one embodiment, a series of color correction filters corresponding to a range of colors similar to PANTONE® colors 472C, 723C, 1485C, and 1555C may be used to control and warm the light. Those skilled in the art will appreciate that the PANTONE® color reference system is frequently used to specify color by designers and printers. Those skilled in the art will appreciate that other filters of other colors may be used to control the light. For example filters that replicate the effect of GAMPRODUCT, INC® colors 325 (Bastard Amber), 328 (Tan Tone), 360 (Amber Blush), and 380 (Golden Tan) may also be used. Those skilled in the art will appreciate that GAMCOLOR® is a series of commercially available color filters, used to correct motion picture and video lighting. The GAMCOLOR® filters are typically used in the form of flexible polyester gels that are applied directly to lamps in sheet form, or wrapped around fluorescent lamps in tube form. The above listed GAMCOLOR® number references represent color temperatures and hues of the actual light that may be replicated in one embodiment of the cosmetic case **210**. The cosmetic case **210** may employ filters and/or lighting to modify the coloring. Optionally, the cosmetic case **210** may capture an image, and then a microprocessor may perform a color adjustment to captured image. Additionally, in another optional embodiment, polarizing filters may also be used to add contrast and shape to the light.

[0139] The cosmetic case **210** may further include a power source **224**. In one embodiment the power source **224** is a lithium ion battery. Those skilled in the art will appreciate that alternate power sources may be used. Additionally, the power source **224** may be a replaceable power source. Optionally, in an alternate embodiment, the power source is not replaceable.

[0140] In one embodiment, the mirror **220** of the cosmetic case **210** incorporates a video camera mirror system, conceptually similar to the above described video camera mirror system **110**. In one embodiment, the display **220** is actually a video display that mimics a mirror and provides a simulated reflection of captured images (similar to the video display **122**

described above). For example, when a user positions herself or himself in front of the mirror display **220**, an embedded camera (not shown) captures the user's image as video and presents the captured video images on the mirror display **220**, thus simulating a mirror's reflection. Additionally, the cosmetic case **210** includes an automated modification feature (not shown). The processing means (not shown) is operatively connected to the cosmetic case **210** and automatically modifies the captured video images in real time and presents the modified video to the user on the mirror display **220**. The presented image may be modified and adjusted in a similar fashion as described in the video camera mirror system **110** embodiments.

[0141] For example, the automatic modification process may include one or more of the following: adjusting the exposure, adjusting highlight levels, adjusting midtone levels, adjusting lowlight levels, adjusting color temperature, adjusting tint, adjusting contrast, adjusting color saturation, sharpening the detail in the highlights, diffusing the midtones, compressing the image, and elongating the image.

[0142] Additionally, in another embodiment, the automated modification feature includes a microprocessor (not shown). The microprocessor analyzes the received images, and facilitates the processes for modification, including automatically adjusting the images as needed, in real time.

[0143] In an alternate embodiment, the cosmetic case **210** includes an audio system and is configured to capture and record audio data. Additionally, the cosmetic case **210** is also configured to play back audio data to the user. In an optional embodiment, the captured audio data may be automatically modified. More particularly, the cosmetic case **210** may include an automatic audio modification feature that includes an equalizer, audio leveler and filter that are configured to automatically modify captured audio data, similar to the embodiments described in the camera **110** embodiments above.

[0144] In another optional embodiment, the cosmetic case **210** includes a communication mechanism for transmitting and receiving data. In one embodiment, the cosmetic case **210** includes a wireless transmitter that permits the cosmetic case to send and receive data wirelessly. Optionally, the cosmetic case **210** may receive media data, which is then presented to the user on the mirror display **220**. For example, the cosmetic case **210** may receive advertising and marketing data that is pertinent to a particular user. The cosmetic case **210** may present the received media on the mirror display **220** for the user to view.

[0145] Additionally, in another embodiment, the cosmetic case **210** may transmit and receive streaming data. Additionally, the cosmetic case **210** may transmit and receive data wirelessly. Optionally, the data may be transmitted and received in real time.

[0146] In another embodiment, the system and method for modifying visual perception is applied to a cosmetic packaging. Referring to FIG. **18**, a cosmetic package **250** having a lighting system **252** is shown. The lighting system **252** provides both key and fill light. The lighting system, as shown in FIG. **18**, is illustrated as a circular-shaped light that surrounds the mirror **260**. However, those skilled in the art will appreciate that the light source may be of shape, size, and/or style. Additionally, in an optional embodiment (not shown), the light source may be a multi-component lighting system. For example, the lighting system could include a first light source positioned above the **260** (acting as the key light) and a second light source positioned below the mirror **260** (acting as the fill light). Further, in one embodiment, the lighting system **252** is a constant light source. Optionally, in an alternate embodiment, the lighting system **252** is a flash light source. Alternately, in an optional embodiment, the lighting system **252** is configured to act as either a constant light source or a flash light source. In one embodiment, the lighting system **252** is composed of multiple LED light sources (not shown), positioned in a circular path around the mirror **260**.

[0147] The mirror **260** may include a video camera mirror system as described above. Alternately, the mirror **260** may include a traditional type mirror without the video capability. The cosmetic package **250** includes a top cover **254** pivotally attached to a bottom **256**. In one embodiment, the top cover **214** is attached to the bottom **216** via a pivot point (not shown). Those skilled in the art will appreciate that other mechanisms may be used to moveably attach the top cover **254** to the bottom **256**. Additionally, the bottom **256** may hold an interchangeable cosmetic pan **217**. The interchangeable pan **217** may hold various kinds of cosmetics, as well as makeup applicators.

[0148] In one embodiment, the mirror **260** of the cosmetic package **250** incorporates a video camera mirror system, conceptually similar to the above described video camera mirror system **110**. In one embodiment, the mirror display **260** is actually a video display that mimics a mirror and provides a simulated reflection of captured images (similar to the video display **122** described above). For example, when a user positions herself or himself in front of the mirror display **260**, an embedded camera (not shown) captures the user's image as video and presents the captured video images on the mirror display **260**, thus simulating a mirror's reflection. Additionally, the cosmetic package **250** includes an automated modification feature (not shown). The processing means (not shown) is operatively connected to the cosmetic package **250** and automatically modifies the captured video images in real time and presents the modified video to the user on the mirror display **260**. The presented image may be modified and adjusted in a similar fashion as described in the video camera mirror system **110** embodiments.

[0149] For example, the automatic modification process may include one or more of the following: adjusting the exposure, adjusting highlight levels, adjusting midtone levels, adjusting lowlight levels, adjusting color temperature, adjusting tint, adjusting contrast, adjusting color saturation, sharpening the detail in the highlights, diffusing the midtones, compressing the image, and elongating the image.

[0150] Additionally, in another embodiment, the automated modification feature includes a microprocessor (not shown). The microprocessor analyzes the received images, and facilitates the processes for modification, including automatically adjusting the images as needed, in real time.

[0151] In another embodiment, the cosmetic packaging is directed to packaging lipstick. More particularly, FIG. **21** illustrates one embodiment of a lipstick packaging **410**. The lipstick packaging includes a top tube end **414** (also called the cap) and a bottom tube end **416** (also called the container). A first lighting system **412***a* is positioned along a ridge of the bottom tube end **416**. Additionally, a mirror **420** is positioned on the outer top side of the top tube end **414**. The lipstick packaging **410** contains a tube of lipstick **411**.

[0152] In an optional embodiment, the first lighting system **412***a* is a lighting system that includes multiple components. Referring to FIG. **22**, the first lighting system **412***a* comprises

a diffuser **450**, a reflector **452** and a light source **454**. The diffuser **450** assists in modifying visual perception by softening shadows and reducing contrast. Optionally, in one embodiment, the diffuser **450** may contain color temperature correction filters, polarizing filters and multiple layers of diffusion materials that vary in intensity. A variety of materials may be used to create the diffuser **450**, including, for example, but not limited to, glass, plastics, resins, fiberglass, ceramic or paper or any combination of these materials.

[0153] The reflector **452** may be used to reflect light and increase brightness and contrast. Additionally, the reflector **452** may effectively boost the power of the light source **454** and assist in focusing and shaping the light itself. The reflector **452** may be composed of a variety of materials, such as, but not limited to, mirrored glass, metallic plastics, resins and highly polished metals or any combination of these compounds and materials.

[0154] In one embodiment, the light source **454** includes a plurality of LEDs **456** positioned in a circular path. Other examples of light sources may include, but are not limited to incandescent light bulbs, arc lamps, gas discharge lamps, neon lamps, flood lamps, modern photographic flashes, lasers, organic light-emitting diodes (OLEDs), sulfur lamps, and any other known light sources.

[0155] In one embodiment, the intensity, contrast and/or color of the first lighting system **412** may be controlled. In one embodiment, the first lighting system **412** is configured to emit a neutral colored light. Optionally, in another embodiment, the first lighting system **412** is configured to emit a golden light. Alternately, in another embodiment, the first lighting system **412** is configured to emit a peach-golden light.

[0156] In an optional embodiment, the lipstick packaging **410** further comprises a second lighting system **412***b* positioned around the mirror **420** on the top tube end **414**. The second lighting system may include multiple components, similar to the first lighting system **412***a*, such as a diffuser (not shown), a reflector (not shown), and a light source (not shown). In an alternate embodiment, the lipstick packaging **410** comprises only the second lighting system **412***b* positioned around the mirror **420** and does not include the first lighting system **412***a* positioned along the ridge of the bottom tube end **416**.

[0157] A power source **431** provides power to operate the lighting systems **412***a*, **412***b*, or a combination thereof. In one embodiment, the power source **431** is a battery that is inserted within the bottom tube portion **416**, and secured by a cover **430**. Those skilled in the art will appreciate that other power sources may be used.

[0158] In another embodiment, the system and method for modifying visual perception is applied to cosmetic tools. For example, referring to FIG. **23** and FIG. **24** an illuminated cosmetic brush **510** is shown. The illuminated cosmetic brush **510** includes a built-in light source **512**. In one embodiment, the light source **512** is a lighting system that is positioned on the brush handle **518** so that the light is directed towards the brush head **514**. Optionally, the lighting system **512** encircles the handle **518** to create an illuminating, lighting effect that surrounds the entire brush head **514**. The lighting system **512** is a constant light source that provides both key and fill light. In one embodiment, the light source **512** includes a plurality of LEDs positioned in a circular path beneath a screen or filter. Other examples of light sources may include, but are not limited to incandescent light bulbs, arc lamps, gas discharge lamps, neon lamps, flood lamps, lasers, organic light-emitting diodes (OLEDs), sulfur lamps, and any other known light sources.

[0159] In one embodiment, the intensity, contrast and/or color of the light source **512** may be controlled. In one embodiment, the light source **512** is configured to emit a neutral colored light. Optionally, in another embodiment, the light source **512** is configured to emit a golden light. Alternately, in another embodiment, the light source **512** is configured to emit a peach-golden light.

[0160] The brush head **514** may be removed from the handle **518**. A male and female fastener system **520** and **521** secure the brush head **514** to the handle **518**. A power button **516** positioned on the handle **518** operates the built-in light source **512**.

[0161] In an optional embodiment, various brush heads may be used to replace the first brush head **514**. Additionally, brush heads of various sizes, lengths and fills may be used with the handle **518**.

[0162] In another embodiment, the system and method for modifying visual perception employs lighting techniques, including the placement and positioning of lighting in a particular location. More particularly, one embodiment provides the proper placement of key light and fill light in a location, such as a room in a building or home. Various techniques may be utilized to enhance the effect of the placed lighting. For example, cosmetics, coloring systems, material compositions, furniture placement, architectural design and natural light control may be used to achieve a modified visual perception. Additionally, filters and lighting techniques may be utilized so that the resulting illuminating light produces the perception of a visually enhancing appearance. Further, in one embodiment the lighting in a particular environment is managed and controlled so that the resulting lighting appears to enhance the subjects in the environment.

[0163] In one embodiment, the system and method for modifying visual perception is utilized to visually modify the perception of an entrance into a building. In FIG. **25** multiple light sources are strategically positioned to create a modified visual effect. Those skilled in the art will appreciate that a variety of types of lights sources may be employed to modify visual perception. Examples of light sources include, but are not limited to, LEDs, incandescent light bulbs, arc lamps, gas discharge lamps, neon lamps, flood lamps, lasers, organic light-emitting diodes (OLEDs), sulfur lamps, and any other known light sources.

[0164] In FIG. **25**, an entrance canopy light box **811** acts as a key light and provides light for subjects walking into the building. Additionally, illuminated architectural panels **812** provide fill light for the same subjects. Further the combined key and fill lights (e.g. the canopy light box **811** and the architectural panels **812**) may affect the perceived appearance of subjects, including humans, in the building entrance. Additionally, the light emanating from the light sources (e.g. the canopy light box **811** and architectural panels **812**) may be designed and/or configured to produce light of a certain color. Optionally, filters may also be used to manipulate the lighting effect. As previously described above, the lighting may be manipulated to produce an effect of golden and brown tones. Examples of these colors may be demonstrated by the by Pantone® coloring system. Such colors include, but are not limited to Pantone® colors 4655U, 4645U, 154U, and 139U. Additionally, as previously described above, the coloring effects may also be demonstrated by the GAMPRODUCT,

INC® colors. Such colors included, but are not limited to GAMCOLOR® numbers: 370 (Spice), 380 (Golden Tan), 430 (Warm Ivory), 390 (Walnut), 364 (Pale Honey), 365 (Warm Straw) and 433 (Double Ivory). Those skilled in the art will appreciate the above list is intended as merely illustrative and is not intended as a limiting list. Optionally, in another embodiment, the lighting is manipulated to produce lighting of different tones, such as but not limited to, greens, blues, browns, peaches, roses, reds, nudes, and any other colors and tones known.

[0165] In another embodiment, the system and method for modifying visual perception is applied to a room. More particularly, in one embodiment lighting is strategically utilized in an example room **901** as illustrated in FIG. **26**. The light can serve multiple functions, depending on the placement of the subjects in the room. The lighting may serve a practical function such as providing light for a person to perform a task (sometimes referred to as task lighting). Additionally, the lighting may be utilized to visually enhance the appearance of subjects in a room. More particularly, key lighting and fill lighting may be provided in a room to create an enhanced cosmetic effect. Further, coloring techniques may be employed to further enhance the cosmetic effect and the visual perception.

[0166] In the room illustrated in FIG. **26**, a pendant lamp **904** provides light in the room **901**, but also serves as key light for people sitting at the table below the pendant lamp **904**. Additionally, the centerpiece lamp **908** positioned on the table, beneath the pendant lamp **904**, provides fill light for the same subjects sitting at the table. The light emanating from the pendant lamp **904** and/or centerpiece lamp **908** may be designed and/or configured to produce light of a certain color and/or tone. Optionally, filters may also be used to manipulate the lighting effect. As previously described above, the lighting may be manipulated to produce an effect of golden and brown tones. Examples of these colors may be demonstrated by the by Pantone® coloring system. Such colors include, but are not limited to Pantone® colors 4655U, 4645U, 154U, and 139U. Additionally, as previously described above, the coloring effects may also be demonstrated by the GAMPRODUCT, INC® colors. Such colors included, but are not limited to GAMCOLOR® numbers: 370 (Spice), 380 (Golden Tan), 430 (Warm Ivory), 390 (Walnut), 364 (Pale Honey), 365 (Warm Straw) and 433 (Double Ivory). Those skilled in the art will appreciate the above list is intended as merely illustrative and is not intended as a limiting list. Optionally, in another embodiment, the lighting is manipulated to produce lighting of different tones, such as but not limited to, greens, blues, browns, peaches, roses, reds, nudes, and any other colors and tones known.

[0167] A column light **912** is used in each of the four posts of the bed shown in room **901**. The column lights **912** may serve as fill light in the room **901** when a person is standing near the column light. However, the column light **912** may instead serve as key light when a person is lying on the bed. Additionally, the various light in the room acts as task lighting. For example, the reading lamps **926** can also provide light so that a person may read. Optionally, in one embodiment, an architectural dome with recessed lighting, or dome lighting **924** is positioned over the bed in the room. The dome lighting may act as a key light source. Illuminated wall panels **922** are positioned behind the bed and also provide light. As described above, the color of light emitted from the light sources may be controlled and altered in order to modify visual perception. In one embodiment, the coloring of the emitted light is adjusted so that it produces an enhanced visual perception in the room environment.

[0168] The room in FIG. **26** also includes four-way ceiling mount lights **910** that may provide task lighting as well as key lighting. The wall washer light **916** may illuminate a person or subject that is positioned near the wall, thereby acting as a key light. The chair rail light **914** would serve as a fill light for a person positioned near the wall. The wall washer light **916** and chair rail light **914** act in combination to enhance the visual appearance of the person positioned near the wall. In other words, in one example, if a first person is positioned near the wall having the wall washer light **916** and chair rail light **914**, and a second person is looking at the first person, then the effect of the light **916** and **914** would visually enhance the second person's perception of the first person.

[0169] A mirror **903** is positioned on the wall in the room **901**. A lighting system **905** surrounds the mirror **903**. Additionally, in one embodiment, the mirror **903** is a video mirror as described above. Further, in one embodiment, the mirror **903** may be used for telecommunications purposes.

[0170] Additionally, in an optional embodiment, the room includes a sensor **930**. Optionally, the sensor may be connected to a microprocessor (not shown) and/or controller (not shown) that controls the lighting in the room. The sensor **930** can detect a person inside the room. Additionally, in one example embodiment, the sensor is configured to detect and sense particular qualities of skin from a target image (such as from a person). In particular, the sensor may detect skin coloring, skin type or other skin features. The microprocessor and/or control may then use the information to adjust the coloring of the light emitted from the various light sources in the room, so that the emitted enhances the visual perception of others of the targeted person or persons.

[0171] Optionally, in another embodiment, the system and method for modifying visual perception may be applied to textiles. For example, in one embodiment, the bedding may be comprised of textiles that have a lighting element. The lighting may be via electronic means, chemical means, a combination thereof, or any other means know. The lighting in the bedding textiles may serve as fill lighting and may better enhance the appearance of an individual. Additionally, the textile lighting may also enhance the others' perception of a person.

[0172] Further, in another example embodiment, the system and method for modifying visual perception may be applied to wearable textiles and/or wall coverings. More particularly, lighting effects may be utilized in such items as clothing or other textiles worn by humans. They lighting assists in visually enhancing the perception of the person. Additionally, lighting effects and techniques may also be employed in wall coverings.

[0173] Additionally, in another optional embodiment, the system and method for modifying visual perception may be employed in three dimensional imagery, such as, but not limited to holograms.

[0174] In FIG. **27** a large pod structure **610** is illustrated. Sliding doors **624** close the pod. In one embodiment, the sliding doors **624** are air-lock doors. Lighting is strategically placed within the pod to modify the visual perception inside. For example, hidden floor lighting **620** is placed under the bench seating **612**. The floor lighting **620** provides a warm glow in the room. Additionally, the table **614** may be illuminated in some embodiments, and serve as fill light for people

sitting on the bench **612**. Hidden chair rail fill lighting **616** is strategically positioned inside the pod. Additionally, hidden architectural key lighting **618** is also placed inside the pod. In various embodiments, a LED programmable dome screen display **622** is placed on the inside of the pod dome. Additionally, in one embodiment, after the doors **624** have closed, the inside of the pod **610** is filled with oxygen and other nutrients. More particularly, in some embodiments, the interior of the pod **610** may be over-oxygenated. Additionally, the interior of the pod **610** may be filled with various scents and aromas. As described above various lighting techniques may be employed to modify and/or enhance the visual perception within the pod structure **610**.

[0175] In another embodiment, the system and method for modifying visual perception includes a polarized mirror. In FIG. **28**, a polarized mirror **650** is illustrated. The polarized mirror includes a display **656**. Additionally, a key light **652** is positioned over the display **656** and a fill light **654** is positioned under the display **654**. The key light shapes and defines the facial features displayed in the mirror **650**, while the fill light **654** softens the shadows and creates the illusion of a glow lit from within.

[0176] Optionally, in an alternate embodiment, a light source may surround the entire polarized mirror **650** (not shown). A top portion of the surrounding light source would act as the key light and the bottom portion of the surrounding light would act as the fill light. Examples of light sources may include, but are not limited to LEDs, incandescent light bulbs, arc lamps, gas discharge lamps, neon lamps, flood lamps, lasers, organic light-emitting diodes (OLEDs), sulfur lamps, and any other known light sources.

[0177] In one embodiment, the key light **652** is covered with a polarization filter. Optionally, in another embodiment, the fill light **654** is covered with a polarization filter. The polarization filter over one or more light sources creates the visual perception of greater contrast and greater color saturation.

[0178] FIG. **29** is a cross section cut through the line **29** of FIG. **28** and illustrates the multiple layers of the polarized mirror, wherein reference numeral **681** denotes the mirror front and reference numeral **688** denotes the mirror back. A diffusion material **684** is sandwiched between the glass **682** and mirrored surface **686**. Diffusion softens the appearance of skin within the reflection itself. A polarized filter **680** is positioned on the glass surface **682**. The polarization of the glass surface **682** in combination with the polarization of the light sources **652** and **654** creates the visual perception of greater contrast and greater color saturation.

[0179] Additionally, in an alternate embodiment, the glass is colored. More particularly, in one example, golden-toned colors are added to the glass surface **682** to modify and enhance the appearance of the skin displayed in the mirror. Optionally, in one embodiment, the mirror includes convex distortion on the vertical axis. The slight vertical axis distortion renders a slimmer looking reflection. The reflection in the mirror **650** is a modified reflection. More particularly, in one embodiment, the reflection in the mirror **650** is an enhanced reflection.

[0180] Optionally, in another embodiment, multiple polarized mirrors **650** may be strategically placed in an environment to achieve a particular effect. For example, in FIG. **30**, multiple polarized mirrors are angularly positioned in a corridor. This strategic placement allows a person to always see the front of his/her reflection, regardless of whether he/she is walking up or down the corridor. As each mirror is a polarized mirror, each reflection is an enhanced reflection. In one example embodiment, the polarized mirrors **650** are each positioned at angles of between approximately 25 degrees to approximately 75 degrees in relation to the corridor wall. Alternately, in another optional embodiment, the polarized mirrors **650** are each positioned at approximately a 45 degree angle in relation to the corridor wall.

[0181] In another optional embodiment, a polarized mirror may be used in combination with the cosmetic case **210** illustrated in FIG. **16**. More particularly, the mirror **220** may be a polarized mirror, wherein the polarized mirror is composed similarly to the polarized mirror **650** described above and illustrated in FIG. **28** and FIG. **29**. For example, the mirror **220** may include a diffusion material sandwiched between glass and a mirrored surface (as illustrated in FIG. **29**). Additionally, a polarized mirror **220** may also include a polarized filter layered on the glass surface of the mirror. (similar to the polarized filter illustrated in FIG. **29**).

[0182] In another embodiment, a polarized mirror may be used in combination with the cosmetic packaging illustrated in FIG. **18**. More particularly, the mirror **260** may be a polarized mirror, wherein the polarized mirror **260** is composed similarly to the polarized mirror **650** described above and illustrated in FIG. **28** and FIG. **29**.

[0183] In another embodiment, a polarized mirror may be used in combination with the lipstick packaging **410** illustrated in FIG. **21**. More particularly, the mirror **420** may be a polarized mirror, wherein the polarized mirror **420** is composed similarly to the polarized mirror **650** described above and illustrated in FIG. **28** and FIG. **29**.

[0184] In another embodiment, the system and method for modifying visual perception is employed in a mobile device. Referring to FIG. **33** a mobile device having a lighting system **712** is shown. The lighting system **712** provides both key and fill light and is illustrated as a circular-shaped light source that surrounds the display **720**. Those skilled in the art will appreciate that the light source may be of any shape. For example, in one embodiment, the light source may be a square-shaped light source (not shown) that surrounds the display **720**. Further, in one embodiment, the lighting system **712** is a constant light source. Optionally, in an alternate embodiment, the lighting system **712** is a flash light source. Alternately, in an optional embodiment, the lighting system **712** is configured to act as either a constant light source or a flash light source.

[0185] Additionally, in an optional embodiment the light source may be a multi-component lighting system. For example, referring to FIG. **32**, a mobile device **702** is shown. The lighting system of mobile device **702** includes a first light source **730** positioned above a display **733** and a second light source **731** positioned below the display **733**. The first light source **730** acts as a key light, and the second light source **731** acts as a fill light. The light sources **730** and **731** may be constant light sources, flash lights, or a configured to work as either. In one embodiment, a camera (not shown) is embedded behind the video display **730**.

[0186] Additionally, the mobile device **702** further includes a system for automatically modifying captured images. In one embodiment, under the control of a user, the embedded camera in the mobile device **702** "takes a picture" or captures an image. Optionally, the mobile device **702** may also be configured to capture and record audio data. The mobile device **702** includes an automatic modification feature. More particularly, captured data is modified automatically in real time.

The captured data may include, but is not limited to, still image data, video data, audio data, and any combination thereof. In one embodiment, the automatic modification process includes a processor to evaluate a captured image and automatically adjust various features of the image. Likewise, the automatic modification process may also apply to other types of captured data, such as video data, audio data or a combination thereof. The automatic modification process may include one or more of the following adjustments: adjusting the exposure, adjusting highlight levels, adjusting midtone levels, adjusting lowlight levels, adjusting color temperature, adjusting tint, adjusting contrast, adjusting color saturation, sharpening the detail in the highlights, diffusing the midtones, compressing the image, and elongating the image.

[0187] Additionally, the mobile device **702** may also include an automatic audio modification feature that automatically modifies captured audio data. The automatic audio modification feature may include an equalizer, audio leveler and filter, similar to that described in the camera **110** embodiments above.

[0188] Further, the mobile device **702** provides a playback feature for displaying the captured image data such a captured video data and captured still image data. The mobile device **702** also includes a microphone for recording audio as well as speakers for playing back recorded audio data.

[0189] In another embodiment, the system and method for modifying visual perception is used in combination with a web camera as shown in FIG. **34**. The web camera **780** includes a built-in lighting system **781**. The built in lighting system **781** is a light source that provides both key and fill light. Additionally, in one embodiment, the lighting system **781** surrounds the lens system **782**. The lighting system **781** is illustrated as a circular-shaped light source. However, those skilled in the art will appreciate that the light source may be of any shape. For example, in one embodiment, the light source may be a square-shaped light source (not shown) that surrounds the lens system **782**. Additionally, in an optional embodiment (not shown), the light source may be a multi-component lighting system. For example, the lighting system may include a first light source positioned above the lens system **782** (acting as the key light) and a second light source positioned below the lens system **14** (acting as the fill light). Further, in one embodiment, the lighting system **781** is a constant light source. Optionally, in an alternate embodiment, the lighting system **781** is a flash light source. Alternately, in an optional embodiment, the lighting system **781** is configured to act as either a constant light source or a flash light source.

[0190] In one embodiment, the lighting system **781** includes a plurality LEDs positioned in a circular path. Other examples of light sources may include, but are not limited to incandescent light bulbs, arc lamps, gas discharge lamps, neon lamps, flood lamps, modern photographic flashes, lasers, organic light-emitting diodes (OLEDs), sulfur lamps, and any other known light sources.

[0191] Additionally, the lens system **782** also comprises infra red auto focus and a light meter. Those skilled in the art will appreciate that other auto focus systems and mechanisms may be used. Additionally, the position of the lens may be adjusted or manipulated by a manual pan and tilt knob **786**. Further, the web camera **781** includes connected cables **784**, such as USB cable or Firewire cable. Alternately, in an optional embodiment, the web camera **781** incorporates wireless technology to wireless transmit and receive information. Additionally, in one embodiment, the web camera **780** works in conjunction with a software application (not shown) that enables the user to control the pan and tilt of the camera through a software interface. Optionally, in another embodiment, the software includes a facial recognition tracking feature that automatically adjusts the pan and tilt of the camera in order to capture a user's image through the camera lens.

[0192] Further, the web camera **782** further includes a system for automatically modifying captured images. In one embodiment, under the control of a user, the web camera "takes a picture" or captures an image (either still or moving images). The captured image is modified automatically in real time. For example, in one embodiment, the automatic modification process evaluates a captured image and automatically adjusts various features of the image. For example, the automatic modification process may include one or more of the following: adjusting the exposure, adjusting highlight levels, adjusting midtone levels, adjusting lowlight levels, adjusting color temperature, adjusting tint, adjusting contrast, adjusting color saturation, sharpening the detail in the highlights, diffusing the midtones, compressing the image, and elongating the image.

[0193] The web camera **782** may also include an automatic audio modification feature that automatically modifies captured audio data in real time. The automatic audio modification feature may include an equalizer, audio leveler and filter, similar to that described in the camera **110** embodiment above.

[0194] The various embodiments described above are provided by way of illustration only and should not be construed to limit the claimed invention. Those skilled in the art will readily recognize various modifications and changes that may be made to the claimed invention without following the example embodiments and applications illustrated and described herein, and without departing from the true spirit and scope of the claimed invention, which is set forth in the following claims.

What is claimed:

1. A camera comprising:

a camera body;

a lens system for capturing images, and at least a portion of the lens system positioned on the outer surface of the camera body;

a lighting system positioned on the outer surface of the camera body and proximate to the lens system, the lighting system providing key light above the lens system and providing fill light below the lens system;

a processor housed within the camera body, the processor controlling one or more operations of the camera including automatically enhancing the captured images; and

a display presented on the outer surface of the camera body and for displaying the automatically enhanced images.

2. The camera of claim **1**, wherein the lighting system comprises a diffuser, a reflector and a light source.

3. The camera of claim **2**, wherein the diffuser includes at least one of color temperature corrections filters, polarizing filters, or any combination thereof.

4. The camera of claim **1**, wherein the lighting system comprises at least one of screens, filters or any combination thereof.

5. The camera of claim **2**, wherein the light source of the lighting system is a light-emitting diode, incandescent light bulb, arc lamp, gas discharge lamp, neon lamp, flood lamp,

modern photographic flash, laser, organic light-emitting diode, sulfur lamp, or any combination thereof.

6. The camera of claim **1**, wherein the lighting system is configured to surround the portion of the lens system positioned on the outer surface of the camera body.

7. The camera of claim **6**, wherein the lighting system is in the shape of a circle, oval, square, rectangle, triangle or polygon.

8. The camera of claim **1**, wherein the operation controlled by the processor is recording captured images, storing captured images, transmitting captured images, transmitting captured images in real time, transmitting streaming data, receiving data, receiving data in real time, receiving streaming data, or any combination thereof.

9. The camera of claim **1**, wherein the camera wirelessly transmits captured images.

10. The camera of claim **1**, further comprising a sensor operatively connected to the processor, the sensor configured to detect color quality information from a target image and use the information to adjust the coloring of the lighting system.

11. The camera of claim **1**, further comprising color correction filters corresponding to at least one of PANTONE colors 472C, 723C, 1485C and 1555C.

12. The camera of claim **1**, wherein the captured image is automatically modified to produce an image comprising only hues corresponding to at least one of PANTONE colors 472C, 723C, 1485C, 1555C, or any combination thereof.

13. The camera of claim **1**, wherein the captured image is automatically modified to produce an image comprising only hues corresponding to at least one of GAMCOLOR numbers 325, 328, 360, 380, or any combination thereof.

14. The camera of claim **1**, wherein the captured image is automatically modified to produce an image comprising only hues corresponding to at least one of PANTONE colors 108C, 111C, 116C, 1485C, or any combination thereof.

15. The camera of claim **1**, wherein the captured image is automatically modified to produce an image comprising only hues corresponding to at least one of GAMCOLOR numbers 385, 450, 455, 570 or any combination thereof.

16. The camera of claim **1**, wherein the captured image is automatically modified to produce an image comprising only hues corresponding to at least one of PANTONE colors 3125C, 3115C, 5025C, 530C, or any combination thereof.

17. The camera of claim **1**, wherein the captured image is automatically modified to produce an image comprising only hues corresponding to at least one of GAMCOLOR numbers 690, 725, 980, 328, or any combination thereof.

18. The camera of claim **1**, wherein the captured image is automatically modified to produce an image comprising only hues corresponding to at least one of PANTONE colors 2915C, 479C, 480C, 4625C, or any combination thereof.

19. The camera of claim **1**, wherein the captured image is automatically modified to produce an image comprising only hues corresponding to at least one of GAMCOLOR numbers 785, 780, 328, 330 or any combination thereof.

20. The camera of claim **1**, wherein the lighting system comprises a plurality of light-emitting diodes positioned in a circular path around the lens system.

21. The camera of claim **1**, wherein the processor automatically adjusts at least one of the exposure, highlight levels, midtone levels, lowlight levels, color temperature, tint, contrast, color saturation, highlight sharpening, midtone diffusion, image compression, image elongation, or any combination thereof.

22. The camera of claim **1**, wherein the processor automatically: increases the exposure level of the captured image between approximately 5% and approximately 25%; increases the highlight levels of the captured image between approximately 5% to approximately 10%; increases the midtone levels of the captured image between approximately 5% to approximately 10%; decreases the lowlight levels of the captured image between approximately 5% to approximately 10%; adjusts the color temperature of the captured image by increasing the yellow tones between approximately 50% to approximately 150%; adjusts the tint of the captured image by decreasing the red tones between approximately 5% to approximately 10%; increases the contrast of the captured image between approximately 50% to approximately 150%; increases the color saturation of the captured image between approximately 50% to approximately 150%; diffuses the midtones of the captured image between approximately 5% to approximately 100%; increases the highlight sharpening of the captured image between approximately 5% to approximately 10%; compresses the captured image along the x-axis between approximately 5% to approximately 10%; and extends the captured image along the y-axis between approximately 5% to approximately 10%.

23. The camera of claim **1**, wherein the processor automatically: increases the exposure level of the captured image by approximately ten percent, increases the highlight levels of the captured image by approximately seven percent, increases the midtone levels of the captured image by approximately seven percent, decreases the lowlight levels of the captured image by approximately seven percent, adjusts the color temperature of the captured image by increasing the yellow tones by approximately seventy-five percent, adjusts the tint of the captured image by decreasing the red tones by approximately seven percent, increases the contrast of the captured image by approximately seventy-five percent, increases the contrast of the captured image by approximately seventy-five percent, increases the color saturation of the captured image by approximately seventy-five percent, increases the highlight sharpening of the captured image by approximately seven percent, diffuses the midtones of the captured image by approximately fifty percent, compresses the captured image along the x-axis by approximately five percent, and extends the captured image along the y-axis by approximately five percent.

24. The camera of claim **1**, wherein the processor automatically increases the exposure level of the captured image by approximately seven percent, increases the highlight levels of the captured image by approximately five percent, increases the midtone levels of the captured image by approximately five percent, decreases the lowlight levels of the captured image by approximately five percent, adjusts the color temperature of the captured image by increasing the yellow tones by approximately fifty percent, adjusts the tint of the captured image by decreasing the red tones by approximately five percent, increases the contrast of the captured image by approximately fifty percent, increases the color saturation of the captured image by approximately fifty percent, increases the highlight sharpening of the captured image by approximately five percent, diffuses the midtones of the captured image by approximately twenty-five percent, compresses the

captured image along the x-axis by approximately 2.5 percent, and extends the captured image along the y-axis by approximately 2.5 percent.

25. A video camera mirror system for enhancing visual perception, the video camera mirror system comprising:

a high definition video display configured to mimic a mirror reflection, the high definition video display having an outer perimeter;

a lighting system surrounding the outer perimeter of the video display, the lighting system providing key light above the high definition video display and providing fill light below the high definition video display;

a camera embedded behind the video display, wherein the embedded camera captures moving images; and

a processor operatively connected to the camera, the processor configured to automatically enhance the captured images and display the enhanced images as a mirror reflection on the video display.

26. The video camera mirror system of claim **25**, wherein the lighting system comprises a diffuser, a reflector and a light source.

27. The video camera mirror system of claim **26**, wherein the diffuser includes at least one of color temperature corrections filters, polarizing filters or any combination thereof.

28. The video camera mirror system of claim **25**, wherein the lighting system comprises at least one of screens, filters or any combination thereof.

29. The video camera mirror system of claim **26**, wherein the light source of the lighting system is a light-emitting diode, incandescent light bulb, arc lamp, gas discharge lamp, neon lamp, flood lamp, modern photographic flash, laser, organic light-emitting diode, sulfur lamp, or any combination thereof.

30. The video camera mirror system of claim **25**, wherein the lighting system is in the shape of a circle, oval, square, rectangle, triangle or polygon.

31. The video camera mirror system of claim **25**, wherein the operation controlled by the processor is recording captured images, storing captured images, transmitting captured images, transmitting captured images in real time, transmitting streaming data, receiving data, receiving data in real time, receiving streaming data or any combination thereof.

32. The video camera mirror system of claim **25**, wherein the camera wirelessly transmits captured images.

33. The video camera mirror system of claim **25**, further comprising a sensor operatively connected to the processor, the sensor configured to detect color quality information from a target image and use the information to adjust the coloring of the lighting system.

34. The video camera mirror system of claim **25**, further comprising an enclosed chair for use with the video mirror.

35. The video camera mirror system of claim **25**, further comprising color correction filters corresponding to at least one of PANTONE colors 472C, 723C, 1485C and 1555C.

36. The video camera mirror system of claim **25**, wherein the captured image is automatically modified to produce an image comprising only hues corresponding to at least one of PANTONE colors 472C, 723C, 1485C, 1555C, or any combination thereof.

37. The video camera mirror system of claim **25**, wherein the captured image is automatically modified to produce an image comprising only hues corresponding to at least one of GAMCOLOR numbers 325, 328, 360, 380, or any combination thereof.

38. The video camera mirror system of claim **25**, wherein the captured image is automatically modified to produce an image comprising only hues corresponding to at least one of PANTONE colors 108C, 111C, 116C, 1485C, or any combination thereof.

39. The video camera mirror system of claim **25**, wherein the captured image is automatically modified to produce an image comprising only hues corresponding to at least one of GAMCOLOR numbers 385, 450, 455, 570 or any combination thereof.

40. The video camera mirror system of claim **25**, wherein the captured image is automatically modified to produce an image comprising only hues corresponding to at least one of PANTONE colors 3125C, 3115C, 5025C, 530C, or any combination thereof.

41. The video camera mirror system of claim **25**, wherein the captured image is automatically modified to produce an image comprising only hues corresponding to at least one of GAMCOLOR numbers 690, 725, 980, 328, or any combination thereof.

42. The video camera mirror system of claim **25**, wherein the captured image is automatically modified to produce an image comprising only hues corresponding to at least one of PANTONE colors 2915C, 479C, 480C, 4625C, or any combination thereof.

43. The video camera mirror system of claim **25**, wherein the captured image is automatically modified to produce an image comprising only hues corresponding to at least one of GAMCOLOR numbers 785, 780, 328, 330 or any combination thereof.

44. The video camera mirror system of claim **25**, wherein the lighting system comprises a plurality of light-emitting diodes positioned in a circular path around the lens system.

45. The video camera mirror system of claim **25**, wherein the processor automatically adjusts at least one of the exposure, highlight levels, midtone levels, lowlight levels, color temperature, tint, contrast, color saturation, highlight sharpening, midtone diffusion, image compression, image elongation, or any combination thereof.

46. The video camera mirror system of claim **25**, wherein the processor automatically: increases the exposure level of the captured image between approximately 5% and approximately 25%; increases the highlight levels of the captured image between approximately 5% to approximately 10%; increases the midtone levels of the captured image between approximately 5% to approximately 10%; decreases the lowlight levels of the captured image between approximately 5% to approximately 10%; adjusts the color temperature of the captured image by increasing the yellow tones between approximately 50% to approximately 150%; adjusts the tint of the captured image by decreasing the red tones between approximately 5% to approximately 10%; increases the contrast of the captured image between approximately 50% to approximately 150%; increases the color saturation of the captured image between approximately 50% to approximately 150%; diffuses the midtones of the captured image between approximately 5% to approximately 100%; increases the highlight sharpening of the captured image between approximately 5% to approximately 10%; compresses the captured image along the x-axis between approximately 5% to approximately 10%; and extends the captured image along the y-axis between approximately 5% to approximately 10%.

47. The video camera mirror system of claim **25**, wherein the processor automatically: increases the exposure level of the captured image by approximately ten percent, increases the highlight levels of the captured image by approximately seven percent, increases the midtone levels of the captured image by approximately seven percent, decreases the low-light levels of the captured image by approximately seven percent, adjusts the color temperature of the captured image by increasing the yellow tones by approximately seventy-five percent, adjusts the tint of the captured image by decreasing the red tones by approximately seven percent, increases the contrast of the captured image by approximately seventy-five percent, increases the contrast of the captured image by approximately seventy-five percent, increases the color saturation of the captured image by approximately seventy-five percent, increases the highlight sharpening of the captured image by approximately seven percent, diffuses the midtones of the captured image by approximately fifty percent, compresses the captured image along the x-axis by approximately five percent, and extends the captured image along the y-axis by approximately five percent.

48. The video camera mirror system of claim **25**, wherein the processor automatically increases the exposure level of the captured image by approximately seven percent, increases the highlight levels of the captured image by approximately five percent, increases the midtone levels of the captured image by approximately five percent, decreases the lowlight levels of the captured image by approximately five percent, adjusts the color temperature of the captured image by increasing the yellow tones by approximately fifty percent, adjusts the tint of the captured image by decreasing the red tones by approximately five percent, increases the contrast of the captured image by approximately fifty percent, increases the color saturation of the captured image by approximately fifty percent, increases the highlight sharpening of the captured image by approximately five percent, diffuses the midtones of the captured image by approximately twenty-five percent, compresses the captured image along the x-axis by approximately 2.5 percent, and extends the captured image along the y-axis by approximately 2.5 percent.

49. A seating system for use in enhancing visual perception, the seating system comprising:

a housing configured to reduce ambient noise;

a seat positioned within the housing; and

a video camera mirror positioned in the housing opposite the seat, the video camera mirror configured to mimic a mirror reflection, the video camera mirror including a high definition video display, a lighting system positioned to surround the outer perimeter of the high definition video display, a camera embedded behind the video display to capture moving images, and a processor to automatically enhance the captured images and display the enhanced images as a mirror reflection on the video display.

50. The seating system of claim **49**, wherein the lighting system provides key light above the high definition video display and provides fill light below the high definition video display.

51. The seating system of claim **49**, wherein the lighting system of the video camera mirror comprises a diffuser, a reflector and a light source.

52. The seating system of claim **51**, wherein the diffuser includes at least one of color temperature corrections filters, polarizing filters, or any combination thereof.

53. The seating system of claim **49**, wherein the lighting system comprises at least one of screens, filters or any combination thereof.

54. The seating system of claim **49**, wherein the light source of the lighting system is a light-emitting diode, incandescent light bulb, arc lamp, gas discharge lamp, neon lamp, flood lamp, modern photographic flash, laser, organic light-emitting diode, sulfur lamp, or any combination thereof.

55. The seating system of claim **49**, wherein the lighting system is in the shape of a circle, oval, square, rectangle, triangle or polygon.

56. The seating system of claim **49**, wherein the operation controlled by the processor is recording captured images, storing captured images, transmitting captured images, transmitting captured images in real time, transmitting streaming data, receiving data, receiving data in real time, receiving streaming data or any combination thereof.

57. The seating system of claim **49**, wherein the video camera mirror wirelessly transmits the captured images.

58. The seating system of claim **49**, wherein the video camera mirror further comprises color correction filters corresponding to at least one of PANTONE colors 472C, 723C, 1485C and 1555C.

59. The seating system of claim **49**, wherein the captured image is automatically modified to produce an image comprising only hues corresponding to at least one of PANTONE colors 472C, 723C, 1485C, 1555C, or any combination thereof.

60. The seating system of claim **49**, wherein the captured image is automatically modified to produce an image comprising only hues corresponding to at least one of GAMCOLOR numbers 325, 328, 360, 380, or any combination thereof.

61. The seating system of claim **49**, wherein the captured image is automatically modified to produce an image comprising only hues corresponding to at least one of PANTONE colors 108C, 111C, 116C, 1485C, or any combination thereof.

62. The seating system of claim **49**, wherein the captured image is automatically modified to produce an image comprising only hues corresponding to at least one of GAMCOLOR numbers 385, 450, 455, 570 or any combination thereof.

63. The seating system of claim **49**, wherein the captured image is automatically modified to produce an image comprising only hues corresponding to at least one of PANTONE colors 3125C, 3115C, 5025C, 530C, or any combination thereof.

64. The seating system of claim **49**, wherein the captured image is automatically modified to produce an image comprising only hues corresponding to at least one of GAMCOLOR numbers 690, 725, 980, 328, or any combination thereof.

65. The seating system of claim **49**, wherein the captured image is automatically modified to produce an image comprising only hues corresponding to at least one of PANTONE colors 2915C, 479C, 480C, 4625C, or any combination thereof.

66. The seating system of claim **49**, wherein the captured image is automatically modified to produce an image comprising only hues corresponding to at least one of GAMCOLOR numbers 785, 780, 328, 330 or any combination thereof.

67. The seating system of claim **49**, wherein the lighting system includes a plurality of light-emitting diodes positioned in a circular path around the high definition video display.

68. The seating system of claim **49**, wherein the processor of the video camera mirror automatically adjusts at least one of the exposure, highlight levels, midtone levels, lowlight levels, color temperature, tint, contrast, color saturation, highlight sharpening, midtone diffusion, image compression, image elongation, or any combination thereof.

69. The seating system of claim **49**, wherein the processor of the video camera mirror automatically: increases the exposure level of the captured image between approximately 5% and approximately 25%; increases the highlight levels of the captured image between approximately 5% to approximately 10%; increases the midtone levels of the captured image between approximately 5% to approximately 10%; decreases the lowlight levels of the captured image between approximately 5% to approximately 10%; adjusts the color temperature of the captured image by increasing the yellow tones between approximately 50% to approximately 150%; adjusts the tint of the captured image by decreasing the red tones between approximately 5% to approximately 10%; increases the contrast of the captured image between approximately 50% to approximately 150%; increases the color saturation of the captured image between approximately 50% to approximately 150%; diffuses the midtones of the captured image between approximately 5% to approximately 100%; increases the highlight sharpening of the captured image between approximately 5% to approximately 10%; compresses the captured image along the x-axis between approximately 5% to approximately 10%; and extends the captured image along the y-axis between approximately 5% to approximately 10%.

70. The seating system of claim **49**, wherein the processor of the video camera mirror automatically: increases the exposure level of the captured image by approximately ten percent, increases the highlight levels of the captured image by approximately seven percent, increases the midtone levels of the captured image by approximately seven percent, decreases the lowlight levels of the captured image by approximately seven percent, adjusts the color temperature of the captured image by increasing the yellow tones by approximately seventy-five percent, adjusts the tint of the captured image by decreasing the red tones by approximately seven percent, increases the contrast of the captured image by approximately seventy-five percent, increases the contrast of the captured image by approximately seventy-five percent, increases the color saturation of the captured image by approximately seventy-five percent, increases the highlight sharpening of the captured image by approximately seven percent, diffuses the midtones of the captured image by approximately fifty percent, compresses the captured image along the x-axis by approximately five percent, and extends the captured image along the y-axis by approximately five percent.

71. The seating system of claim **49**, wherein the processor of the video camera mirror automatically increases the exposure level of the captured image by approximately seven percent, increases the highlight levels of the captured image by approximately five percent, increases the midtone levels of the captured image by approximately five percent, decreases the lowlight levels of the captured image by approximately five percent, adjusts the color temperature of the captured image by increasing the yellow tones by approximately fifty percent, adjusts the tint of the captured image by decreasing the red tones by approximately five percent, increases the contrast of the captured image by approximately fifty percent, increases the color saturation of the captured image by approximately fifty percent, increases the highlight sharpening of the captured image by approximately five percent, diffuses the midtones of the captured image by approximately twenty-five percent, compresses the captured image along the x-axis by approximately 2.5 percent, and extends the captured image along the y-axis by approximately 2.5 percent.

72. The seating system of claim **49**, further comprising a sensor operatively connected to the video camera mirror processor, the sensor configured to detect color quality information from a target image in the seat and use the information to adjust the coloring of the lighting system surrounding the high definition video display.

73. The seating system of claim **49**, further comprising:

a sensor positioned within the housing;

a second lighting system including at least one key light positioned over the seat and a fill light positioned below the height of the embedded camera in the video camera mirror; and

a control processor configured to receive signals from the sensor and automatically adjust the key light and fill light.

74. The seating system of claim **49**, wherein the video camera mirror further comprises a telecommunication port and facilitates the transmission of data to and from various communications portals.

75. The seating system of claim **49**, further comprising one or more audio speakers positioned adjacent to the seat.

76. The seating system of claim **49**, further comprising a scent diffuser.

77. A cosmetic package comprising:

a top cover pivotally attached to a bottom cover;

a mirror attached to the top cover, wherein the mirror is surrounded by a lighting system; and

an interchangeable pan, removably contained in the bottom cover.

78. The cosmetic package of claim **77**, wherein the cosmetic package is a cosmetic case.

79. The cosmetic package of claim **77**, further comprising a power source.

80. The cosmetic package of claim **77**, wherein the mirror is a video mirror configured to mimic a mirror reflection, the video mirror comprising a video display, a camera embedded behind the video display, wherein the embedded camera captures moving images; and a processor to automatically enhance the captured images and display the enhanced images as a mirror reflection on the video display, and wherein the lighting system surrounding the mirror provides key light above the video display and provides fill light below the video display.

81. The cosmetic package of claim **77**, wherein the lighting system comprises a diffuser, a reflector and a light source.

82. The cosmetic package of claim **81**, wherein the light source of the lighting system is a light-emitting diode, incandescent light bulb, arc lamp, gas discharge lamp, neon lamp, flood lamp, modern photographic flash, laser, organic light-emitting diode, sulfur lamp, or any combination thereof.

83. The cosmetic package of claim **77**, wherein the cosmetic package is in the shape of a circle, oval, square, rectangle, triangle or polygon.

84. The cosmetic package of claim **77**, wherein the lighting system is in the shape of a circle, oval, square, rectangle, triangle or polygon.

85. The cosmetic package of claim **77**, wherein the operation controlled by the processor is recording captured images, storing captured images, transmitting captured images, transmitting captured images in real time, transmitting streaming data, receiving data, receiving data in real time, receiving streaming data, or any combination thereof.

86. The cosmetic package of claim **77**, wherein the cosmetic package wirelessly transmits the captured images.

87. The cosmetic package of claim **77**, further comprising color correction filters corresponding to at least one of PANTONE colors 472C, 723C, 1485C and 1555C.

88. The cosmetic package of claim **77**, wherein the captured image is automatically modified to produce an image comprising only hues corresponding to at least one of PANTONE colors 472C, 723C, 1485C, 1555C, or any combination thereof.

89. The cosmetic package of claim **77**, wherein the captured image is automatically modified to produce an image comprising only hues corresponding to at least one of GAMCOLOR numbers 325, 328, 360, 380, or any combination thereof.

90. The cosmetic package of claim **77**, wherein the captured image is automatically modified to produce an image comprising only hues corresponding to at least one of PANTONE colors 108C, 111C, 116C, 1485C, or any combination thereof.

91. The cosmetic package of claim **77**, wherein the captured image is automatically modified to produce an image comprising only hues corresponding to at least one of GAMCOLOR numbers 385, 450, 455, 570 or any combination thereof.

92. The cosmetic package of claim **77**, wherein the captured image is automatically modified to produce an image comprising only hues corresponding to at least one of PANTONE colors 3125C, 3115C, 5025C, 530C, or any combination thereof.

93. The cosmetic package of claim **77**, wherein the captured image is automatically modified to produce an image comprising only hues corresponding to at least one of GAMCOLOR numbers 690, 725, 980, 328, or any combination thereof.

94. The cosmetic package of claim **77**, wherein the captured image is automatically modified to produce an image comprising only hues corresponding to at least one of PANTONE colors 2915C, 479C, 480C, 4625C, or any combination thereof.

95. The cosmetic package of claim **77**, wherein the captured image is automatically modified to produce an image comprising only hues corresponding to at least one of GAMCOLOR numbers 785, 780, 328, 330 or any combination thereof.

96. The cosmetic package of claim **77**, wherein the lighting system comprises a plurality of light-emitting diodes positioned in a circular path around the lens system.

97. The cosmetic package of claim **77**, wherein the processor automatically adjusts at least one of the exposure, highlight levels, midtone levels, lowlight levels, color temperature, tint, contrast, color saturation, highlight sharpening, midtone diffusion, image compression, image elongation, or any combination thereof.

98. The cosmetic package of claim **77**, wherein the processor automatically: increases the exposure level of the captured image between approximately 5% and approximately 25%; increases the highlight levels of the captured image between approximately 5% to approximately 10%; increases the midtone levels of the captured image between approximately 5% to approximately 10%; decreases the lowlight levels of the captured image between approximately 5% to approximately 10%; adjusts the color temperature of the captured image by increasing the yellow tones between approximately 50% to approximately 150%; adjusts the tint of the captured image by decreasing the red tones between approximately 5% to approximately 10%; increases the contrast of the captured image between approximately 50% to approximately 150%; increases the color saturation of the captured image between approximately 50% to approximately 150%; diffuses the midtones of the captured image between approximately 5% to approximately 100%; increases the highlight sharpening of the captured image between approximately 5% to approximately 10%; compresses the captured image along the x-axis between approximately 5% to approximately 10%; and extends the captured image along the y-axis between approximately 5% to approximately 10%.

99. The cosmetic package of claim **77**, wherein the processor automatically: increases the exposure level of the captured image by approximately ten percent, increases the highlight levels of the captured image by approximately seven percent, increases the midtone levels of the captured image by approximately seven percent, decreases the lowlight levels of the captured image by approximately seven percent, adjusts the color temperature of the captured image by increasing the yellow tones by approximately seventy-five percent, adjusts the tint of the captured image by decreasing the red tones by approximately seven percent, increases the contrast of the captured image by approximately seventy-five percent, increases the contrast of the captured image by approximately seventy-five percent, increases the color saturation of the captured image by approximately seventy-five percent, increases the highlight sharpening of the captured image by approximately seven percent, diffuses the midtones of the captured image by approximately fifty percent, compresses the captured image along the x-axis by approximately five percent, and extends the captured image along the y-axis by approximately five percent.

100. The cosmetic package of claim **77**, wherein the processor automatically increases the exposure level of the captured image by approximately seven percent, increases the highlight levels of the captured image by approximately five percent, increases the midtone levels of the captured image by approximately five percent, decreases the lowlight levels of the captured image by approximately five percent, adjusts the color temperature of the captured image by increasing the yellow tones by approximately fifty percent, adjusts the tint of the captured image by decreasing the red tones by approximately five percent, increases the contrast of the captured image by approximately fifty percent, increases the color saturation of the captured image by approximately fifty percent, increases the highlight sharpening of the captured image by approximately five percent, diffuses the midtones of the captured image by approximately twenty-five percent, compresses the captured image along the x-axis by approximately 2.5 percent, and extends the captured image along the y-axis by approximately 2.5 percent.

101. A lipstick packaging comprising:

a container having an open end and a closed end, the container configured to hold a tube of lipstick;

a lighting system positioned along a ridge portion of the container, the lighting system providing a light source in the direction of the open end of the container;

a cap configured to removably connect to the open end of the container; and

a mirror positioned on the cap.

102. The lipstick packaging of claim **101**, wherein the lighting system comprises a diffuser, a reflector and a light source.

103. The lipstick packaging of claim **101**, wherein the light source of the lighting system is a light-emitting diode, incandescent light bulb, arc lamp, gas discharge lamp, neon lamp, flood lamp, modern photographic flash, laser, organic light-emitting diode, sulfur lamp, or any combination thereof.

104. The lipstick packaging of claim **101**, wherein the lighting system is in the shape of a circle, oval, square, rectangle, triangle or polygon.

105. The lipstick packaging of claim **101**, further comprising a power source.

106. The lipstick packaging of claim **101**, further comprising a second lighting system encircling the mirror on the cap.

107. The lipstick packaging of claim **101**, wherein the mirror is a video mirror configured to mimic a mirror reflection, the video mirror comprising a video display, a camera embedded behind the video display, wherein the embedded camera captures moving images, and a processor to automatically enhance the captured images and display the enhanced images as a mirror reflection on the video display.

108. The lipstick packaging of claim **101**, wherein the operation controlled by the processor is recording captured images, storing captured images, transmitting captured images, transmitting captured images in real time, transmitting streaming data, receiving data, receiving data in real time, receiving streaming data, or any combination thereof.

109. The lipstick packaging of claim **101**, wherein the lipstick packaging wirelessly transmits the captured images.

110. The lipstick packaging of claim **101**, further comprising a second lighting system surrounding an outer perimeter of the video display.

111. The lipstick packaging of claim **101**, wherein the lighting system comprises a plurality of light-emitting diodes positioned in a circular path.

112. The lipstick packaging of claim **101**, further comprising color correction filters corresponding to at least one of PANTONE colors 472C, 723C, 1485C and 1555C.

113. The lipstick packaging of claim **101**, wherein the captured image is automatically modified to produce an image comprising only hues corresponding to at least one of PANTONE colors 472C, 723C, 1485C, 1555C, or any combination thereof.

114. The lipstick packaging of claim **101**, wherein the captured image is automatically modified to produce an image comprising only hues corresponding to at least one of GAMCOLOR numbers 325, 328, 360, 380, or any combination thereof.

115. The lipstick packaging of claim **101**, wherein the captured image is automatically modified to produce an image comprising only hues corresponding to at least one of PANTONE colors 108C, 111C, 116C, 1485C, or any combination thereof.

116. The lipstick packaging of claim **101**, wherein the captured image is automatically modified to produce an image comprising only hues corresponding to at least one of GAMCOLOR numbers 385, 450, 455, 570 or any combination thereof.

117. The lipstick packaging of claim **101**, wherein the captured image is automatically modified to produce an image comprising only hues corresponding to at least one of PANTONE colors 3125C, 3115C, 5025C, 530C, or any combination thereof.

118. The lipstick packaging of claim **101**, wherein the captured image is automatically modified to produce an image comprising only hues corresponding to at least one of GAMCOLOR numbers 690, 725, 980, 328, or any combination thereof.

119. The lipstick packaging of claim **101**, wherein the captured image is automatically modified to produce an image comprising only hues corresponding to at least one of PANTONE colors 2915C, 479C, 480C, 4625C, or any combination thereof.

120. The lipstick packaging of claim **101**, wherein the captured image is automatically modified to produce an image comprising only hues corresponding to at least one of GAMCOLOR numbers 785, 780, 328, 330 or any combination thereof.

121. The lipstick packaging of claim **101**, wherein the lighting system comprises a plurality of light-emitting diodes positioned in a circular path around the lens system.

122. The lipstick packaging of claim **101**, wherein the processor automatically adjusts at least one of the exposure, highlight levels, midtone levels, lowlight levels, color temperature, tint, contrast, color saturation, highlight sharpening, midtone diffusion, image compression, image elongation, or any combination thereof.

123. The lipstick packaging of claim **101**, wherein the processor automatically: increases the exposure level of the captured image between approximately 5% and approximately 25%; increases the highlight levels of the captured image between approximately 5% to approximately 10%; increases the midtone levels of the captured image between approximately 5% to approximately 10%; decreases the lowlight levels of the captured image between approximately 5% to approximately 10%; adjusts the color temperature of the captured image by increasing the yellow tones between approximately 50% to approximately 150%; adjusts the tint of the captured image by decreasing the red tones between approximately 5% to approximately 10%; increases the contrast of the captured image between approximately 50% to approximately 150%; increases the color saturation of the captured image between approximately 50% to approximately 150%; diffuses the midtones of the captured image between approximately 5% to approximately 100%; increases the highlight sharpening of the captured image between approximately 5% to approximately 10%; compresses the captured image along the x-axis between approximately 5% to approximately 10%; and extends the captured image along the y-axis between approximately 5% to approximately 10%.

124. The lipstick packaging of claim **101**, wherein the processor automatically: increases the exposure level of the captured image by approximately ten percent, increases the highlight levels of the captured image by approximately seven percent, increases the midtone levels of the captured image by approximately seven percent, decreases the low-

light levels of the captured image by approximately seven percent, adjusts the color temperature of the captured image by increasing the yellow tones by approximately seventy-five percent, adjusts the tint of the captured image by decreasing the red tones by approximately seven percent, increases the contrast of the captured image by approximately seventy-five percent, increases the contrast of the captured image by approximately seventy-five percent, increases the color saturation of the captured image by approximately seventy-five percent, increases the highlight sharpening of the captured image by approximately seven percent, diffuses the midtones of the captured image by approximately fifty percent, compresses the captured image along the x-axis by approximately five percent, and extends the captured image along the y-axis by approximately five percent.

125. The lipstick packaging of claim **101**, wherein the processor automatically increases the exposure level of the captured image by approximately seven percent, increases the highlight levels of the captured image by approximately five percent, increases the midtone levels of the captured image by approximately five percent, decreases the lowlight levels of the captured image by approximately five percent, adjusts the color temperature of the captured image by increasing the yellow tones by approximately fifty percent, adjusts the tint of the captured image by decreasing the red tones by approximately five percent, increases the contrast of the captured image by approximately fifty percent, increases the color saturation of the captured image by approximately fifty percent, increases the highlight sharpening of the captured image by approximately five percent, diffuses the midtones of the captured image by approximately twenty-five percent, compresses the captured image along the x-axis by approximately 2.5 percent, and extends the captured image along the y-axis by approximately 2.5 percent.

126. A polarized mirror comprising:

a mirror display, wherein the display comprises:

a mirrored surface,

a diffusion material layered over the mirrored surface;

a glass material layered over the diffusion material; and

a polarized filter layered over the glass surface; and

a key light positioned over the mirror display and a fill light positioned beneath the mirror display.

127. The polarized mirror of claim **126**, wherein the polarized mirror is convexly distorted along the vertical axis.

128. The polarized mirror of claim **126**, wherein the glass surface is colored.

129. The polarized mirror of claim **126**, wherein each of the key light and the fill light comprising a light source and the light source is a light-emitting diode, incandescent light bulb, arc lamp, gas discharge lamp, neon lamp, flood lamp, modern photographic flash, laser, organic light-emitting diode, sulfur lamp, or any combination thereof.

130. An illuminated cosmetic brush comprising:

a brush head;

a handle configured to removably connect to the brush head via an attachment point; and

a lighting system positioned on the handle, such that the lighting system surrounds the handle and directs lighting around the brush head.

131. The illuminated cosmetic brush of claim **130**, further comprising a power source configured to provide power to the lighting system.

132. The illuminated cosmetic brush of claim **130** wherein the handle is configured to removably connect to one or more different brush heads.

133. The illuminated cosmetic brush of claim **130**, wherein the lighting system comprises a diffuser, a reflector and a light source.

134. The illuminated cosmetic brush of claim **133**, wherein the light source of the lighting system is a light emitting diode, incandescent light bulb, arc lamp, gas discharge lamp, neon lamp, flood lamp, modern photographic flash, laser, organic light-emitting diode, sulfur lamp, or any combination thereof.

135. The illuminated cosmetic brush of claim **130**, wherein the lighting system is in the shape of a circle, oval, square, rectangle, triangle or polygon.

136. The illuminated cosmetic brush of claim **130**, wherein the lighting system comprises a plurality of light-emitting diodes positioned in a circular shape around the brush head.

137. A personal portrait photography management system, the system comprising:

an image capturing device having a lens;

a lighting system surrounding the lens of the image capturing device, the lighting system providing key light above the lens and providing fill light below the lens;

a processor operatively connected to the image capturing device, wherein the processor analyzes captured images and automatically enhances the captured images in real time; and

a display for display the automatically enhanced images.

138. The personal portrait photography management system of claim **137**, wherein the image capturing device is one of a camera, video camera, cellular phone, mobile phone, web camera or video mirror.

139. The personal portrait photography management system of claim **137**, wherein the lighting system comprises a diffuser, a reflector and a light source.

140. The personal portrait photography management system of claim **137**, is in the shape of a circle, oval, square, rectangle, triangle or polygon.

141. The personal portrait photography management system of claim **137**, wherein the operation controlled by the processor is recording captured images, storing captured images, transmitting captured images, transmitting captured images in real time, transmitting streaming data, receiving data, receiving data in real time, receiving streaming data, or any combination thereof.

142. The personal portrait photography management system of claim **137**, wherein the image capturing device further comprises color correction filters corresponding to at least one of PANTONE colors 472C, 723C, 1485C and 1555C.

143. The personal portrait photography management system of claim **137**, wherein the captured image is automatically modified to produce an image comprising only hues corresponding to at least one of PANTONE colors 472C, 723C, 1485C, 1555C, or any combination thereof.

144. The personal portrait photography management system of claim **137**, wherein the captured image is automatically modified to produce an image comprising only hues corresponding to at least one of GAMCOLOR numbers 325, 328, 360, 380, or any combination thereof.

145. The personal portrait photography management system of claim **137**, wherein the captured image is automatically modified to produce an image comprising only hues

corresponding to at least one of PANTONE colors 108C, 111C, 116C, 1485C, or any combination thereof.

146. The personal portrait photography management system of claim **137**, wherein the captured image is automatically modified to produce an image comprising only hues corresponding to at least one of GAMCOLOR numbers 385, 450, 455, 570 or any combination thereof.

147. The personal portrait photography management system of claim **137**, wherein the captured image is automatically modified to produce an image comprising only hues corresponding to at least one of PANTONE colors 3125C, 3115C, 5025C, 530C, or any combination thereof.

148. The personal portrait photography management system of claim **137**, wherein the captured image is automatically modified to produce an image comprising only hues corresponding to at least one of GAMCOLOR numbers 690, 725, 980, 328, or any combination thereof.

149. The personal portrait photography management system of claim **137**, wherein the captured image is automatically modified to produce an image comprising only hues corresponding to at least one of PANTONE colors 2915C, 479C, 480C, 4625C, or any combination thereof.

150. The personal portrait photography management system of claim **137**, wherein the captured image is automatically modified to produce an image comprising only hues corresponding to at least one of GAMCOLOR numbers 785, 780, 328, 330 or any combination thereof.

151. An illumination system for modifying visual perception, the system comprising:

one or more key lights positioned within the interior of the room;

one or more fill lights positioned within the interior of the room;

a processor operatively connected to each of the one or more key lights and each of the one or more fill lights, the processor configured to control the operation of the lights; and

a sensor operatively connected to the processor, the sensor configured to detect color quality information from a target image and use the information to adjust at least one of the key and fill lights to adjust the lighting tone.

152. The system of claim **151**, one or more of the key lights includes at least one of screens, filters or any combination thereof.

153. The system of claim **151**, wherein each of the key lights including a light source, and the light source is a light-emitting diode, incandescent light bulb, arc lamp, gas discharge lamp, neon lamp, flood lamp, modern photographic flash, laser, organic light-emitting diode, sulfur lamp, or any combination thereof.

154. The system of claim **151**, wherein each of the fill lights including a light source, and the light source is a light-emitting diode, incandescent light bulb, arc lamp, gas discharge lamp, neon lamp, flood lamp, modern photographic flash, laser, organic light-emitting diode, sulfur lamp, or any combination thereof.

155. The system of claim **151**, wherein the processor automatically adjusts one or more light sources of one or more key and fill lights to produce color tones corresponding to at least one of PANTONE colors 472C, 723C, 1485C, 1555C, or any combination thereof.

156. The system of claim **151**, wherein the processor automatically adjusts one or more light sources of one or more key and fill lights to produce color tones corresponding to at least one of GAMCOLOR numbers 325, 328, 360, 380, or any combination thereof.

157. The system of claim **151**, wherein the processor automatically adjusts one or more light sources of one or more key and fill lights to produce color tones corresponding to at least one of PANTONE colors 108C, 111C, 116C, 1485C, or any combination thereof.

158. The system of claim **151**, wherein the processor automatically adjusts one or more light sources of one or more key and fill lights to produce color tones corresponding to at least one of GAMCOLOR numbers 385, 450, 455, 570 or any combination thereof.

159. The system of claim **151**, wherein the processor automatically adjusts one or more light sources of one or more key and fill lights to produce color tones corresponding to at least one of PANTONE colors 3125C, 3115C, 5025C, 530C, or any combination thereof.

160. The system of claim **151**, wherein the processor automatically adjusts one or more light sources of one or more key and fill lights to produce color tones corresponding to at least one of GAMCOLOR numbers 690, 725, 980, 328, or any combination thereof.

161. The system of claim **151**, wherein the processor automatically adjusts one or more light sources of one or more key and fill lights to produce color tones corresponding to at least one of PANTONE colors 2915C, 479C, 480C, 4625C, or any combination thereof.

162. The system of claim **151**, wherein the processor automatically adjusts one or more light sources of one or more key and fill lights to produce color tones corresponding to at least one of GAMCOLOR numbers 785, 780, 328, 330 or any combination thereof.

* * * * *