US007753240B2

(12) **United States Patent**
Leoncavallo et al.

(10) **Patent No.: US 7,753,240 B2**
(45) **Date of Patent: Jul. 13, 2010**

(54) **CLOSURE FOR A LIQUID CONTAINER**

(75) Inventors: **Richard A. Leoncavallo**, Niagara Falls, NY (US); **John D. DeLorme**, Spencerport, NY (US)

(73) Assignee: **Nalge Nunc International Corporation**, Rochester, NY (US)

(*) Notice: Subject to any disclaimer, the term of this patent is extended or adjusted under 35 U.S.C. 154(b) by 722 days.

(21) Appl. No.: **11/342,080**

(22) Filed: **Jan. 27, 2006**

(65) **Prior Publication Data**

US 2007/0175931 A1 Aug. 2, 2007

Related U.S. Application Data

(63) Continuation-in-part of application No. 29/224,096, filed on Feb. 24, 2005, now Pat. No. Des. 543,454.

(51) **Int. Cl.**
B65D 47/00 (2006.01)
B65D 39/00 (2006.01)
B65D 43/14 (2006.01)

(52) **U.S. Cl.** **222/556**; 222/562; 222/550; 222/498; 220/592; 220/841; 220/254.3; 215/235; 215/354; 215/395

(58) **Field of Classification Search** 222/556, 222/562, 563, 498, 533, 567, 568, 545, 546, 222/548, 550, 551, 554, 557; 220/592, 810, 220/840, 254.3, 324, 841–845, 847, 848; 221/63; 215/354, 344, 395, 396, 398, 235, 215/236

See application file for complete search history.

(56) **References Cited**

U.S. PATENT DOCUMENTS

175,811 A 4/1876 Wright
1,850,894 A * 3/1932 Punte et al. 220/810
2,051,815 A * 8/1936 Booth 222/556
2,263,446 A * 11/1941 Sebell 220/842
2,764,199 A * 9/1956 Tupper 220/254.3
2,889,087 A * 6/1959 Paull et al. 222/498
2,950,847 A * 8/1960 Tupper 222/465.1
D194,890 S 3/1963 Marler
D196,458 S 10/1963 Uderwood et al.
3,113,693 A 12/1963 Stull
D206,029 S 10/1966 Stull
3,297,132 A * 1/1967 Ripple 198/378
3,390,804 A * 7/1968 Morgan 220/212
3,741,447 A 6/1973 Miles et al.
4,456,135 A 6/1984 Beekes
5,088,614 A * 2/1992 Dumestre 220/713

(Continued)

Primary Examiner—Kevin P Shaver
Assistant Examiner—Stephanie E Tyler
(74) *Attorney, Agent, or Firm*—Wood, Herron & Evans, LLP

(57) **ABSTRACT**

A closure for a liquid container includes a spout and a loop member extending upwardly from an end wall of the closure. The loop may be sized to receive a user's finger or attachment hardware such as a clip, hook or strap extending through the loop. A flip cap is supported for rotational movement on the loop and is movable between a closed position in which the spout is covered and an open position in which the spout is exposed. The flip cap includes a plug seal that is configured to engage and seal with a top edge of the spout when the cap is moved to the closed position.

37 Claims, 5 Drawing Sheets

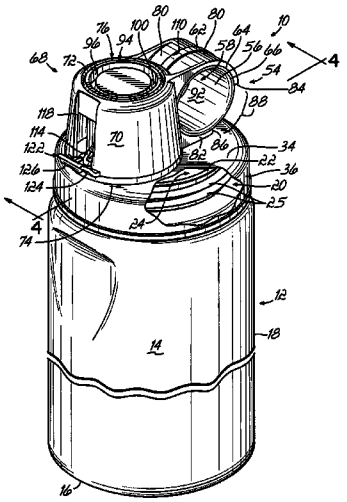

U.S. PATENT DOCUMENTS

D336,247	S		6/1993	Solomon	
5,305,900	A	*	4/1994	Maguire et al.	215/245
5,320,232	A	*	6/1994	Maguire et al.	215/245
5,328,058	A	*	7/1994	Leoncavallo et al.	222/153.14
5,417,350	A		5/1995	Koo	
5,603,436	A		2/1997	Leoncavallo et al.	
D417,339	S		12/1999	Miller	
6,039,207	A		3/2000	Adamek	
D422,503	S		4/2000	Lehn	
6,132,227	A		10/2000	Boteler et al.	
6,170,683	B1	*	1/2001	Montgomery	215/235
D445,684	S		7/2001	Key	
6,261,026	B1	*	7/2001	Conley et al.	403/397
6,644,487	B2	*	11/2003	Smith et al.	215/235
D505,294	S		5/2005	Gauss	
7,044,317	B2	*	5/2006	Smith et al.	215/235
2004/0089627	A1		5/2004	Smith et al.	
2004/0217139	A1		11/2004	Roth et al.	

* cited by examiner

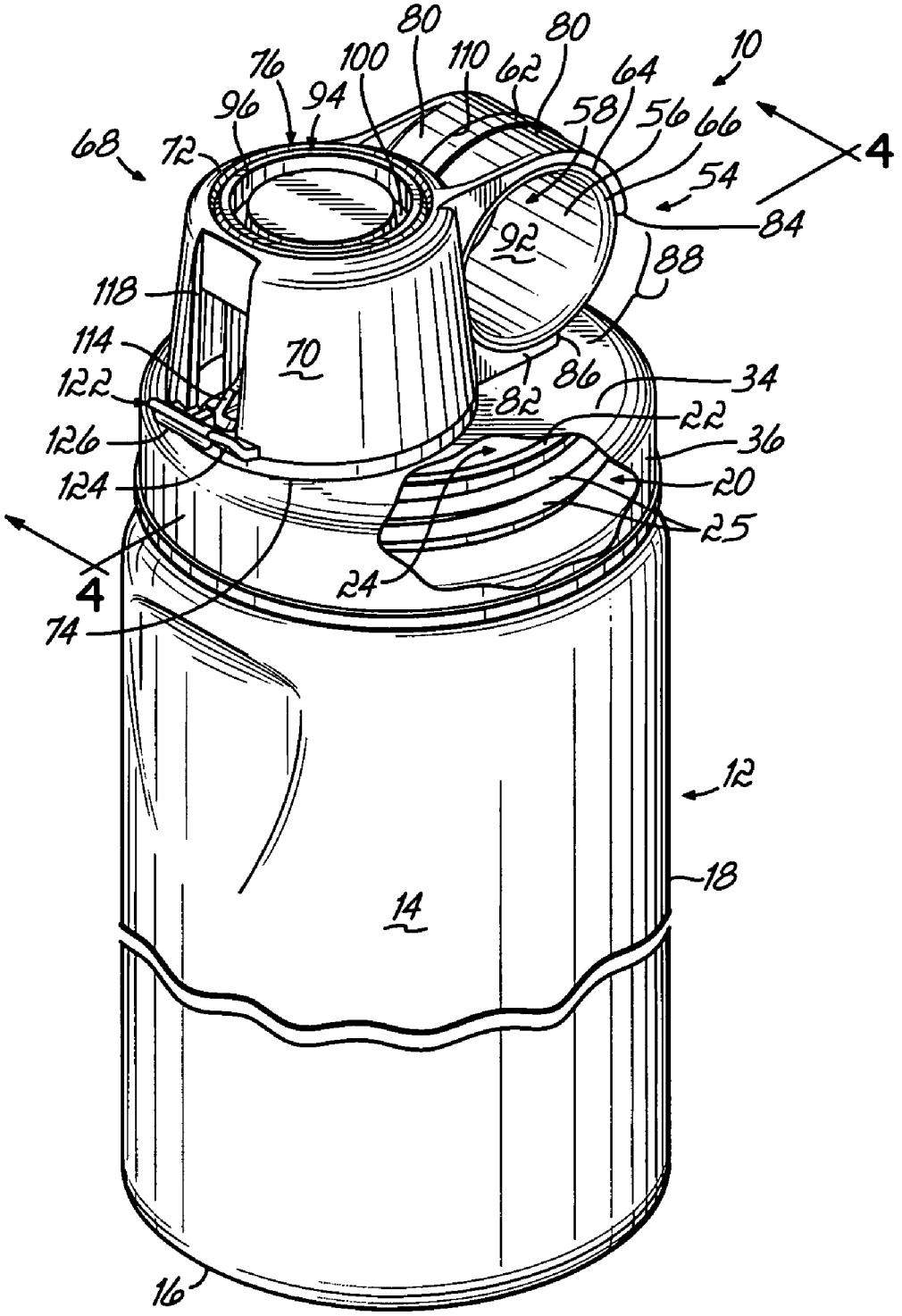
10
4
4
12
14
16
18
20
22
24
25
34
36
54
56
58
62
64
66
68
70
72
74
76
80
80
82
84
86
88
92
94
96
100
110
114
118
122
124
126

FIG. 1

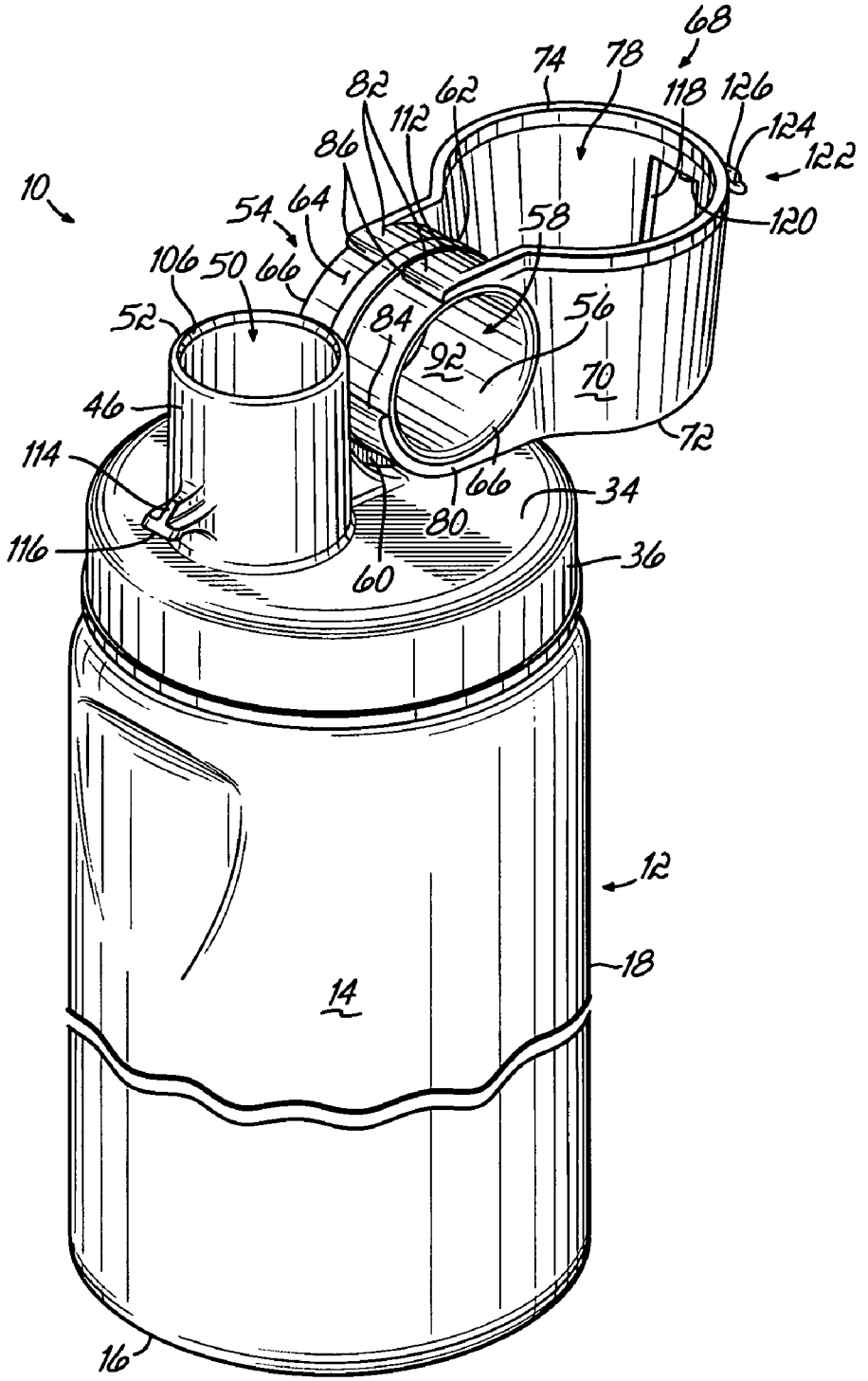
68
74
78
118
126
124
122
120
82
62
112
86
10
54
64
58
106
50
66
52
84
56
92
70
46
72
114
66
34
80
116
60
36
12
18
14
16

FIG. 1A

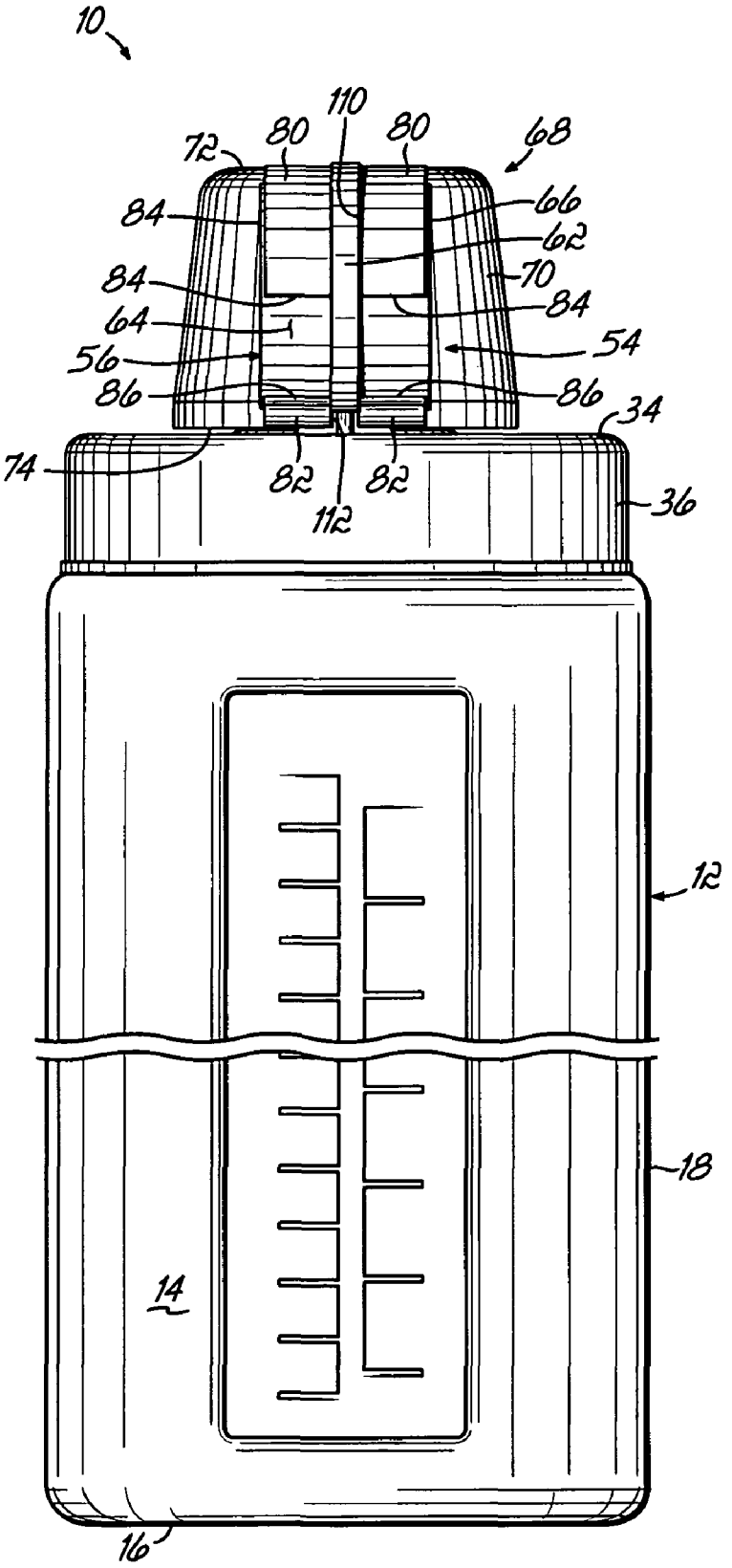
10
110
80
80
72
68
84
66
62
84
70
84
64
54
56
86
86
34
74
82
82
112
36
12
18
14
16

FIG. 1B

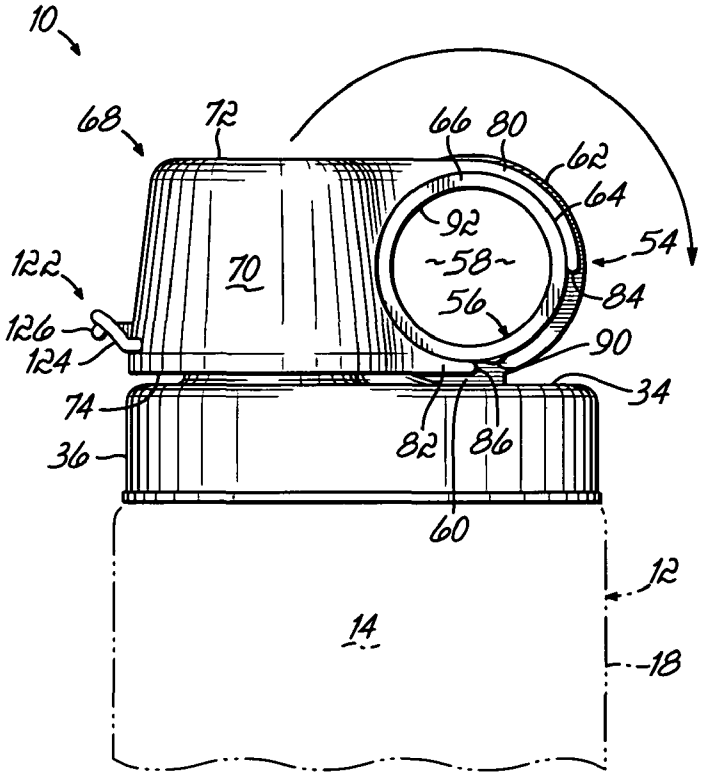
10
68
72
66
80
62
64
92
~58~
54
122
70
56
84
126
124
90
34
74
82
86
36
60
12
14
18

FIG. 2

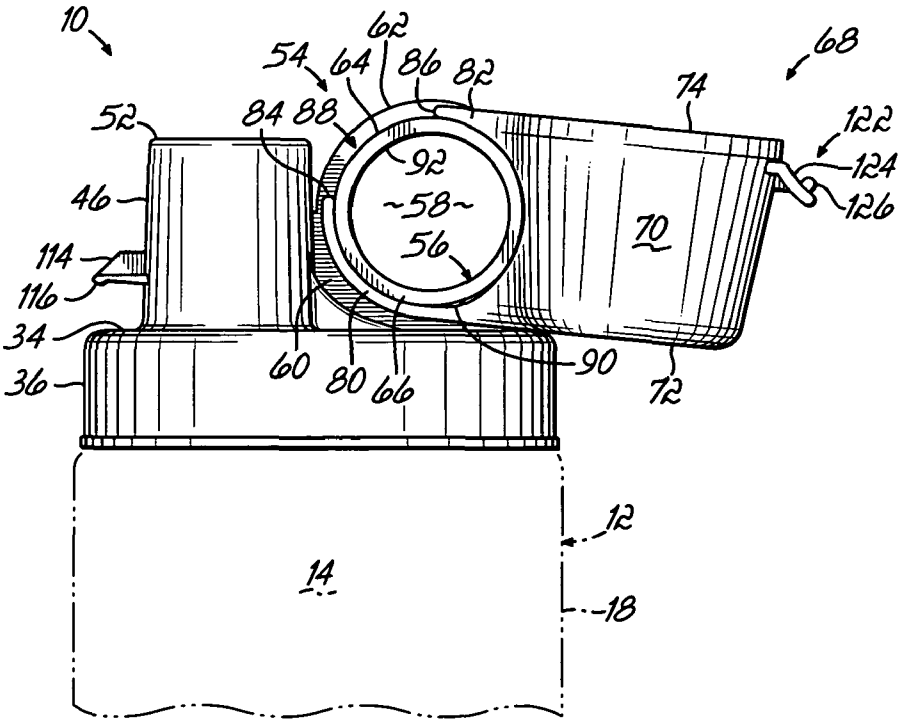
10
62
68
54
64
86
82
74
52
84
88
122
124
92
126
46
~58~
70
56
114
116
34
60
80
66
90
36
72
12
14
18

FIG. 3

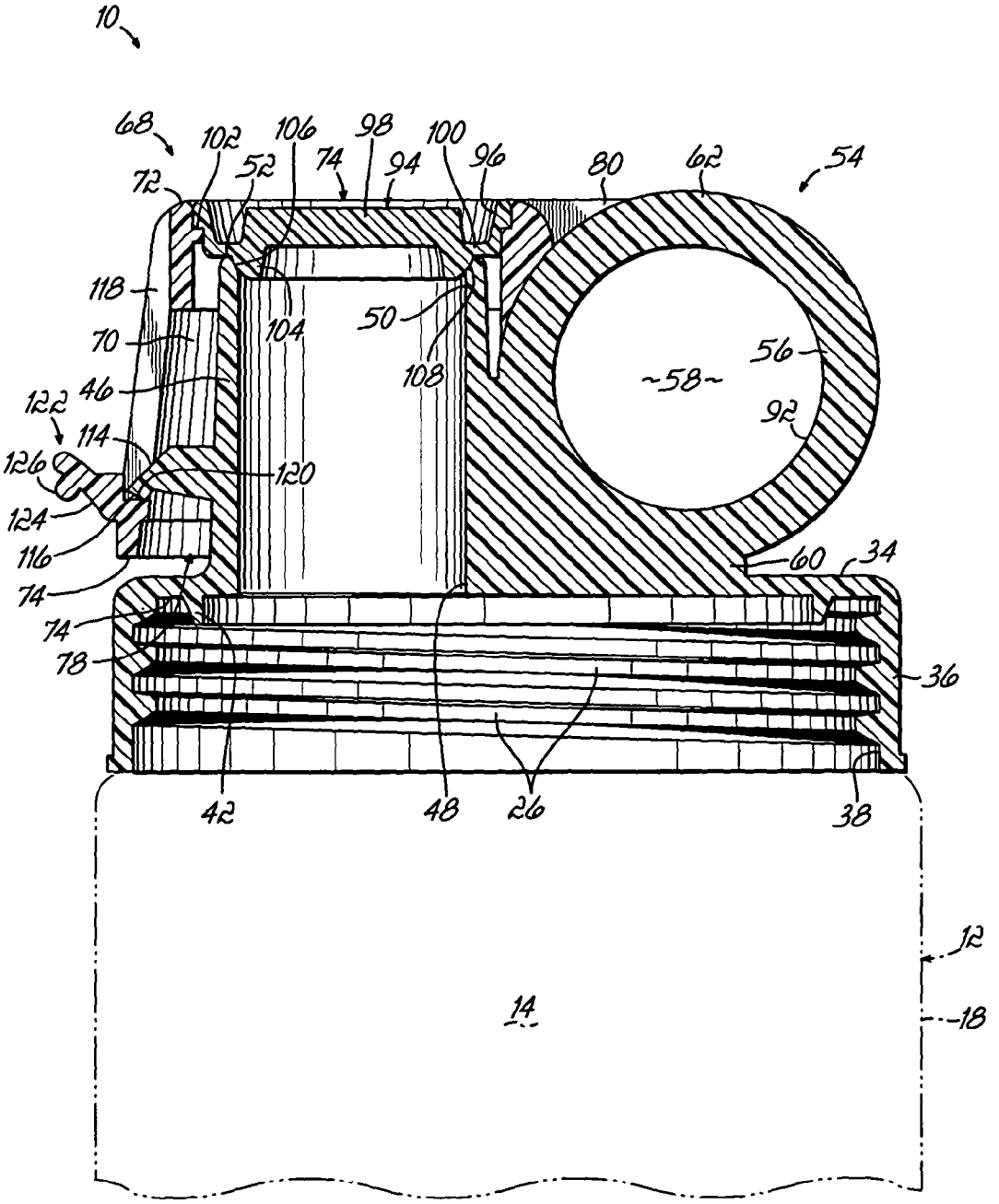
10
68
102
106
98
100
72
52
74
94
96
80
62
54
118
104
50
70
108
56
~58~
122
46
92
114
126
120
124
116
60
34
74
74
78
36
42
48
26
38
12
14
18

FIG. 4

CLOSURE FOR A LIQUID CONTAINER

The present application is a continuation-in-part of U.S. Design Ser. No. 29/224,096 filed Feb. 24, 2005, now U.S. Design Pat. No. D543,454, the disclosure of which is hereby incorporated herein by reference in its entirety.

FIELD OF THE INVENTION

The present invention relates generally to liquid containers and, more particularly, to a closure for use with a liquid container to provide selective dispensing of liquid from within the container.

BACKGROUND OF THE INVENTION

Various types of bottles or containers have been developed in the past that include a closure to provide selective dispensing of liquid from the container. Typically, the closure is removably attached to the neck of the container so a user can remove the closure to add liquid, powders, ice or other products into the container. The closure is then screwed or snapped onto the neck of the container to provide a generally watertight and leak-proof seal.

When a user desires to drink liquid from the container, the closure may be removed by unscrewing the closure to provide access into the reservoir of the container. The user drinks from an opening formed by the neck of the container and then replaces the closure onto the container to re-seal the container.

For outdoor activities, such as biking or hiking for example, it is oftentimes desirable to have a closure provided with a push/pull type spout. With this type of spout, a slidable or movable spout portion is mounted on a stem portion wherein the spout portion may be pulled in an upward direction to open the spout and pushed in a downward direction to close the spout. A flip top protective cover may be mounted to the closure to protect the spout from damage or contamination from dirt or other debris when the cover is closed. The spout is accessed by moving the cover to an open position to thereby expose the spout which is then opened by the user by pulling on the spout.

While the closure types described above provide many advantages to users, especially those involved in sports, hiking or other activities, there is still a need for an improved closure having a liquid dispensing opening or spout that allows the closure to be readily grasped by a user or attached to another article through suitable attachment hardware while providing a cover for the opening or spout. There is also a need for an improved closure that provides quick and convenient access to, and/or opening of, the opening or spout with minimal manipulation of the closure by a user.

SUMMARY OF THE INVENTION

The present invention overcomes the foregoing and other shortcomings and drawbacks of liquid container closures heretofore known for dispensing of liquid from within the container. While the invention will be described in connection with certain embodiments, it will be understood that the invention is not limited to these embodiments. On the contrary, the invention includes all alternatives, modifications and equivalents as may be included within the spirit and scope of the present invention.

In accordance with the principles of the present invention, a closure is provided for use with a liquid container to provide selective dispensing of liquid from the container. The closure is configured to be removably secured to a neck of the container and provide an essentially watertight and leak-proof seal with container neck.

In one aspect of the present invention, the closure may include a spout extending upwardly from an end wall of the closure. The spout has an outlet opening in fluid communication with the container reservoir so that liquid pours out of the spout when a user tilts the container.

In accordance with another aspect of the present invention, the closure includes a loop member extending upwardly from the end wall of the closure that defines an opening therethrough. The loop may be sized to receive a user's finger or attachment hardware such as a clip, hook or strap extending through the loop. In this way, the container is easily grasped by a user by inserting a finger through the loop. The container is also readily attachable to another article, such as a backpack or a user's article of clothing, by inserting attachment hardware through the loop.

According to another aspect of the present invention, a flip cap is provided on the closure to selectively cover the spout when the spout is not in use. The flip cap is supported for rotational movement on the loop and is movable between a closed position in which the spout is covered and an open position in which the spout is exposed. In one embodiment, the flip cap includes a pair of opposing arcuate connector members for releasably engaging the loop. The loop isolates the connector members from a user's finger or attachment hardware passing through the loop so that the user's finger or attachment hardware does not interfere with movement of the flip cap or cause unintentional opening of the flip cap.

In another aspect of the present invention, the flip cap may include a plug seal that is configured to engage and seal with a top edge of the spout when the flip cap is moved to the closed position to cover the spout. The plug seal automatically sealingly engages the spout to prevent undesired leakage of liquid from the spout when the flip cap is closed.

In yet another aspect of the present invention, the closure includes an outlet opening formed in the end wall of the closure. The outlet opening is configured so that liquid pours out of the outlet opening when the user tilts the container. The flip cap may be configured to cover, and possibly seal, the outlet opening when flip cap is closed.

The above and other objects and advantages of the present invention shall be made apparent from the accompanying drawings and the description thereof.

BRIEF DESCRIPTION OF THE DRAWINGS

The accompanying drawings, which are incorporated in and constitute a part of this specification, illustrate embodiments of the invention and, together with a general description of the invention given above, and the detailed description of the embodiments given below, serve to explain the principles of the invention.

FIG. **1** is a perspective view of a closure in accordance with one embodiment of the present invention for use with a liquid container, showing a front, top and right side of the closure and container and a flip cap of the closure oriented in a closed position;

FIG. **1**A is a view similar to FIG. **1** showing the flip cap oriented in an open position;

FIG. **1**B is a partial rear elevational view of the container shown in FIG. **1**;

FIG. **2** is an enlarged side elevational view of the closure of FIG. **1**, showing the flip cap oriented in the closed position;

FIG. **3** is a view similar to FIG. **2** showing the flip cap oriented in the open position; and

FIG. **4** is an enlarged cross-sectional view taken along line **4-4** of FIG. **1**.

DETAILED DESCRIPTION OF THE PREFERRED EMBODIMENT

Referring now to the figures, a closure **10** having a novel and visually distinctive appearance is shown in accordance with the principles of the present invention for use with a liquid container **12**. Container **12** is shown in an exemplary embodiment including a container body **14** having a base **16** and an upwardly extending sidewall **18** defining an interior reservoir for receiving and storing liquids therein. The container **12** further includes a neck **20** opposite the base **16** and has a top edge **22** defining an opening **24** into the reservoir of the container **12** as shown in FIG. **1**. In one embodiment, the container neck **20** has external threads **25** (FIG. **1**) for engaging cooperating internal threads **26** (FIG. **4**) provided on the closure **10** as will be described in detail below.

The container **12**, per se, does not necessarily form a part of the broadest aspects of the present invention. The body **14** of the container **12** may have any suitable configuration, and the container neck **20** may have a different cross-sectional size and/or shape than the container body **14**. Alternatively, the container **12** may not have a neck **20** per se. Instead, the container **12** may consist of just a body with an opening. The container **12** may have a rigid wall or walls, or may have a somewhat flexible wall or walls.

The opening **24** at the top edge **22** of the container neck **20** may be sized to permit ice cubes or large chunks of ice to be placed easily into the reservoir for chilling the liquid therein. In one embodiment, the neck finish of the container **12** may be between about 53 mm and about 63 mm. and the exemplary container **12** may be sized to hold a volume of between about 22 oz. and about 26 oz. of liquid. The outer diameter of the container **12** may be sized to fit in a car cup holder, a bike bottle cage or a pocket of a backpack, for example. It will be appreciated that other dimensions of neck finishes and sizes of the container **12** are possible as well without departing from the spirit and scope of the present invention.

The closure **10** is configured to be removably secured to the neck **20** of the container **12**. In one embodiment, the closure **10** is configured to be received over the neck **20** of the container **12** to seal with the top edge **22** of the container **12**. The closure **10** includes a generally circular-shaped end wall **34** and an annular skirt wall **36** depending from the end wall **34**. As shown in FIG. **4**, an interior surface **38** of the skirt wall **36** includes the threads **26** that are configured to cooperate with the corresponding external threads **25** provided on the container neck **20** whereby the closure **10** may be secured to the container **12** by screwing the closure **10** onto the neck **20** of the container **12**. A seal ring **42** (FIG. **4**) is formed on an interior side **44** of the end wall **34** and is configured to engage the top edge **22** of the neck **20** to thereby seal the closure **10** in an essentially watertight, leak-proof manner, with the opening **24** of the container **12**. It will be appreciated that other sealing structures well known in the art are possible for sealing the closure **10** with the container opening **24** without departing from the spirit and scope of the present invention.

In accordance with one aspect of the present invention, the closure **10** includes a generally tubular spout **46** extending upwardly from the end wall **34** of the closure **10**. The spout **46** includes an inlet opening **48** provided in the end wall **34** of the closure **10** and an outlet opening **50** (FIG. **4**) defined by a top edge **52** of the spout **46**. The outlet opening **50** is in fluid communication with the reservoir when the closure **10** is secured to the container neck **20** so that liquid within the container **12** pours out of the spout **46** when a user tilts the container **12**.

In one embodiment, the spout **46** is generally in the form of a cylinder with the top edge **52** of the spout **46** lying in a generally horizontal plane. The outlet opening **50** may have a diameter of about ¾ in. to provide a steady fluid flow through the spout **46** and also for easy cleaning. The spout **46** may have a dispensing axis that is generally parallel to, but offset from, a central longitudinal axis of the container **12**. It is contemplated that other cross-sectional shapes of the spout **46** and other dimensions and orientations of the outlet opening **50** are possible as will be appreciated by those of ordinary skill in the art. Accordingly, the spout **46** and outlet opening **50** may each have a variety of different shapes and sizes which are a matter of design choice open to a variety of possibilities.

In accordance with another aspect of the present invention, the closure includes a loop member **54** extending upwardly from the end wall **34** of the closure **10**. The loop **54** may include a generally tubular wall **56** that defines an opening **58** therethrough. The opening **58** may have an axis that is generally transverse to the dispensing axis of the outlet opening **50** and the central longitudinal axis of the container **12**. The loop **54** may be sized to receive a user's finger or, alternatively, attachment hardware such as a clip, hook or strap (not shown) extending through the loop **54** for grasping the container **12** and/or securing the container **12** to an article of clothing or a backpack, for example.

In one embodiment, the loop **54** is a closed loop in the form of a cylinder and has a generally circular cross-sectional shape. It is contemplated that the loop **54** need not be completely closed and may have other cross-sectional shapes and sizes that would permit the container **12** to be grasped by a user's finger or attached to another article with attachment hardware extending through the loop **54**. The loop **54** may be positioned adjacent the spout **46** and connected to the spout **46** and the end wall **34** through an integral connecting web **60**. Alternatively, it is contemplated that the loop **54** may be spaced from the spout **46** so that a gap is provided between the spout **46** and the loop **54**.

The loop **54** may include an arcuate rib **62** provided on an outer arcuate surface **64** of the loop **54**. In one embodiment, the rib **62** extends about the outer surface **64** (FIG. **1**A) of the loop **54** and is positioned generally centrally between opposite side edges **66** (FIG. **1**A) of the loop **54**. The rib **62** may be generally continuous along its length or, alternatively, it may be interrupted or discontinuous or have a variety of other configurations as a matter of design choice.

The closure **10**, including the end wall **34**, skirt wall **36**, spout **46** and loop **54**, may be molded from suitable thermoplastic material or materials. For example, in one embodiment, the closure **10** may be molded as an integral component from a polypropylene copolymer. Alternatively, the closure **10** may be molded from one or more of the same or different thermoplastic materials to provide a desired soft feel or texture to the closure **10**.

In accordance with yet another aspect of the present invention, a flip cap **68** is provided on the closure **10** to selectively cover the spout **46** when the spout is not in use. In one embodiment, the flip cap **68** is supported for rotational movement on the loop **54** and is movable between a closed position in which the spout **46** is covered (FIGS. **1**, **1**B, **2** and **4**) and an open position in which the spout **46** is exposed (FIGS. **1**A and **3**).

In one embodiment, the flip cap **68** includes a generally tubular sidewall **70** that tapers slightly outwardly from a top

edge **72** of the flip cap **68** (FIGS. **1** and **4**) to a bottom edge **74** thereof. The flip cap **68** includes an upper opening **76** (FIGS. **1** and **4**) defined by the top edge **72** and an opposite lower opening **78** defined by the bottom edge **74**. The flip cap **68** further includes a pair of opposing arcuate connector members **80**, **82** in the form of fingers or jaws that extend or project outwardly from the sidewall **70** of the flip cap **68** and are configured to releasably engage with the loop **54**.

The connector members **80**, **82** have respective free ends **84**, **86** that are spaced apart and define a gap **88** therebetween (FIGS. **1** and **3**). The gap **88** is sized so that the flip cap **68** can be snapped onto the loop **54** by passing the loop **54** through the gap **88**. At least one of the connector members **80**, **82** may be sufficiently resilient so as to flex away from the other connector member when the loop **54** is passed through the gap **88** and thereafter flex back toward the other connector member to secure the flip cap **68** onto the loop **54**.

In one embodiment, each of the pair of opposing connector members **80**, **82** has a radius of curvature that generally corresponds to the radius of curvature of the loop **54**. The connector members **80**, **82** may be positioned to engage the outer arcuate surface **64** of the loop **54** so that the flip cap **68** is rotatably supported by the loop **54** for movement between the open and closed positions. In this way, the loop **54** isolates the connector members **80**, **82** from a user's finger or attachment hardware passing through the loop **54** so that the user's finger or attachment hardware does not interfere with movement of the flip cap **68** or cause unintentional opening of the flip cap **68**. Moreover, the surface contact of the connector members **80**, **82** with the loop **54** provides a bearing surface that resists breakage of the pivotal connection formed between the flip cap **68** and the loop **54**.

As shown in FIG. **2**, one or more detents **90** (one shown) in the form of a rib or other suitable structure project outwardly from the outer arcuate surface **64** of the loop **54** on opposite sides of the annular rib **62**. The detents **90** are configured to frictionally engage the connector member **80** as it travels about the loop **54** when the flip cap **68** is moved to the open position as shown in FIG. **3**. The frictional engagement of the detents **90** with the connector member **80** aid in keeping the flip cap **68** in the open position when the user desires access to the spout **46**.

While a pair of opposite arcuate connector members **80**, **82** is shown, it is contemplated that only a single connector member may be provided in an alternative embodiment. In this alternative embodiment, the arcuate length of one of the connector members **80** or **82** may be increased so that the loop **54** is passed through a gap formed between a free end of the connector member and the sidewall **70** of the flip cap **68**, for example. Also, while the flip cap **68** is shown with the arcuate connector members **80**, **82** positioned on the outer surface **64** of the loop **54**, it is contemplated that in an alternative embodiment, one or more connector members may be provided on the flip cap **68** that engage the inner arcuate surface **92** of the loop **54** instead. Accordingly, those skilled in the art will appreciate that other pivotal connection structures are possible for rotatably supporting the flip cap **68** on the loop **54** without departing from the spirit and scope of the present invention.

In accordance with another aspect of the present invention, a plug seal **94** is positioned in the upper opening **76** of the flip cap **54** adjacent the top edge **72** of the cap sidewall **70**. The plug seal **94** includes an outer annular wall **96**, a central plug seal body **98** and an annular connecting web **100** extending between the annular wall **96** and the plug seal body **98** as shown in FIGS. **1** and **4**. As shown in FIG. **4**, the flip cap **68** includes a radially inwardly directed annular shoulder **102** for securing the plug seal **94** adjacent the top edge **72** of the flip cap **68**. The central plug seal body **98** may have a depending annular sealing wall **104** as shown in FIG. **4** that is configured to engage and seal with the top edge **52** of the spout **46**. The top edge **52** of the spout **46** may have a chamfered portion **106** that sealingly engages with a radially outward sealing surface **108** of the annular sealing wall **104**. The flip cap **68** and spout **46** are configured so that as the flip cap **68** is moved to the closed position as shown in FIGS. **1**, **1**B, **2** and **4**, the central plug seal body **98** automatically sealingly engages with the spout **46** to prevent undesired leakage of liquid from the outlet opening **50**.

According to another aspect of the present invention, the flip cap **68** and plug seal **94** are integrally molded in a two-shot molding operation. For example, the flip cap **68** may be molded during a first shot of a two-shot molding process from a suitable thermoplastic material, such as a polycarbonate. The flip cap **68** may have a generally transparent color and a texture provided on its outer surface. During the second shot of the two-shot molding process, the plug seal **94** is formed and integrally attached to the radially inwardly directed annular shoulder **102** of the flip cap **68**. The plug seal **94** may be molded from a suitable material such as a thermoplastic elastomer, for example, and have a desired color. Alternatively, it is contemplated that the flip cap **68** and plug seal **94** may be formed as separate components and connected together through any suitable method to securely mount the plug seal **94** to the flip cap **68**.

As shown in FIGS. **1**, **1**A and **1**B, each of the arcuate connector members **80**, **82** may include a respective arcuate slot **110**, **112** extending toward the free ends **84**, **86** of the connector members **80**, **82**. The slots **110**, **112** are configured to receive the annular rib **62** of the loop **54** therein so as to guide the flip cap **68** in proper alignment with the spout **46** as the flip cap **68** is rotated to the closed position. In this way, proper alignment of the plug seal **94** with the top edge **52** of the spout **46** is maintained as the plug seal **94** is brought into engagement with the top edge **52** of the spout **46** to seal the spout.

In one embodiment, a latch member **114** projects outwardly from the spout **46** and terminates in a chamfered surface **116** as shown in FIGS. **1**A, **3** and **4**. The flip cap **68** is provided with an elongated opening **118** (FIGS. **1** and **4**) having a locking surface **120** (FIGS. **1**A and **4**) provided at a lower end thereof. As the flip cap **68** is moved to the closed position, the chamfered surface **116** of the latch member **114** is brought into releasable locking engagement with the locking surface **120** of the flip cap **68** as shown in FIG. **4**.

The flip cap **68** includes a finger tab **122** for enabling a user to lift the flip cap **68** out of engagement with the latch member **114** to open the spout **46**. The finger tab **122** includes an inwardly angled surface **124** for more easily allowing a user's finger to slide beneath the tab **122**. Finger tab **122** further includes a projection **126** beneath the inwardly angled surface **124** for allowing the user's finger to easily grip the finger tab **122** and lift it upwardly. It will be appreciated that other suitable locking structures known to those skilled in the art are possible as well without departing from the spirit and scope of the present invention.

In an alternative embodiment, the closure **10** does not include the spout **46**. According to this alternative embodiment, an outlet opening (not shown) is formed in the end wall **34** of the closure **10** in fluid communication with the reservoir when the closure **10** is secured is to the container neck **20**. The flip cap **68** may be configured to cover, and possibly seal, the outlet opening (not shown) formed in the end wall **34** of the closure **10**.

In use, the closure **10** may be unscrewed from the neck **20** of the container **12** and the container may be filled with a desired liquid or beverage and ice, for example. During storage and transportation with liquid contained in the container **12**, the flip cap **68** is moved to the closed position so that the plug seal **94** forms an essentially watertight and leak-proof seal with the top edge **52** of the spout **46**, or alternatively, an outlet opening formed in the end wall **34** of the closure **10**. When it is desired to drink or dispense liquid from the container **12**, the flip cap **68** is flipped to the open position shown in FIGS. **1**A and **3** by lifting tab **122** with a finger to expose the spout **46** or outlet opening formed in the end wall **34** of the closure **10**. When the user is finished dispensing liquid from the container **12**, the flip cap **68** is flipped back to the closed position to cover the spout **46** or outlet opening formed in the end wall **34** of the closure **10** and provide an essentially leak-proof seal with the spout **46** or outlet opening formed in the wall **34** of the closure.

While the present invention has been illustrated by the description of one or more embodiments thereof, and while the embodiments have been described in considerable detail, they are not intended to restrict or in any way limit the scope of the appended claims to such detail. Additional advantages and modifications will readily appear to those skilled in the art. The invention in its broader aspects is therefore not limited to the specific details, representative apparatus and method and illustrative examples shown and described. Accordingly, departures may be made from such details without departing from the scope or spirit of Applicants' general inventive concept.

Having described the invention, we claim:

1. A closure for use with a liquid container, comprising:
an end wall;
a skirt wall depending from the end wall;
an outlet opening associated with the end wall;
a loop member extending from the end wall and defining an opening therethrough having a generally horizontal axis, the end wall, skirt wall and loop member being integrally molded as a unitary component;
a cap supported for rotational movement on the loop member, the cap being movable between a first position in which the outlet opening is covered by the cap and a second position in which the outlet opening is exposed; and
at least one arcuate connector member supported by the cap, the at least one connector member having a free end that is configured to flex relative to the cap for engagement of the at least one connector member about the loop member to releasably connect the cap to the loop member.

2. The closure of claim **1** further comprising a spout extending from the end wall and terminating in the outlet opening, the spout defining a flow path through the end wall to the outlet opening.

3. The close of claim **2** wherein the spout is covered by the cap in the first position of the cap and exposed in the second position of the cap.

4. The closure of claim **2** wherein the cap is configured to seal with and close the outlet opening of the spout when the cap is moved to the first position.

5. The closure of claim **4** wherein the outlet opening of the spout is open when the cap is moved to the second position.

6. The closure of claim **1** wherein the loop member is located adjacent the spout.

7. The closure of claim **1** wherein the loop member comprises a closed loop.

8. The closure of claim **7** wherein the closed loop has a generally circular cross-sectional shape.

9. The closure of claim **2** wherein the cap comprises:
a generally tubular cap wall; and
a plug seal supported by the cap wall, the plug seal being configured to seal with and close the outlet opening of the spout when the cap is moved to the first position.

10. The closure of claim **9** wherein the cap wall is made of a first material and the plug seal is made of a second material.

11. The closure of claim **1** further comprising a pair of opposing arcuate connector members.

12. The closure of claim **1** wherein the at least one arcuate connector member is located outwardly of the loop member.

13. The closure of claim **11** wherein the pair of opposing arcuate connector members are located outwardly of the loop member.

14. The closure of claim **1** further comprising an arcuate rib projecting outwardly from the loop member.

15. The closure of claim **14** further comprising a slot formed in the at least one connector member, wherein at least a portion of the annular rib is located within the slot.

16. The closure of claim **1** further comprising a detent projecting outwardly from the loop member, wherein the detent is configured to engage the at least one connector member when the cap is moved to the second position.

17. The closure of claim **1** further comprising a latch member projecting outwardly from the spout, wherein the latch member is configured to releasably engage the cap when the cap is moved to the first position.

18. The closure of claim **17** further comprising a tab member projecting from the cap member.

19. The closure of claim **1** further comprising a liquid container having a liquid receiving interior and an opening, wherein the closure is configured to engage the liquid container to close the opening.

20. A closure for use with a liquid container, comprising:
an end wall;
A skirt wall depending from the end wall;
a spout extending upwardly from the end wall and terminating in an outlet opening, the spout defining a flow path through the end wall to the outlet opening;
a loop member extending upwardly from the end wall and defining an opening therethrough having a generally horizontal axis, the end wall, skirt wall and loop member being integrally molded as a unitary component;
a cap supported for rotational movement on the loop member, the cap being movable between a first position in which the spout is covered by the cap and a second position in which the spout is exposed; and
at least one arcuate connector member supported by the cap, the at least one connector member having a free end that is configured to flex relative to the cap for engagement of the at least one connector member about the loop member to releasably connect the cap to the loop member, the at least one arcuate connector member being located outwardly of the loop member.

21. The closure of claim **20** wherein the loop member is located adjacent the spout.

22. The closure of claim **20** wherein the loop member comprises a closed loop.

23. The closure of claim **20** wherein the cap comprises:
a generally tubular cap wall; and
a plug seal supported by the cap wall, the plug seal being configured to seal with and close the outlet opening of the spout when the cap is moved to the first position.

24. The closure of claim **23** wherein the cap wall is made of a first material and the plug seal is made of a second material.

25. The closure of claim **20** further comprising an arcuate rib projecting outwardly from the loop member.

26. The closure of claim **25** further comprising a slot formed in the at least one connector member, wherein at least a portion of the annular rib is located within the slot.

27. The closure of claim **20** further comprising a detent projecting outwardly from the loop member, wherein the detent is configured to engage the at least one connector member when the cap is moved to the second position.

28. The closure of claim **20** further comprising a liquid container having a liquid receiving interior and an opening, wherein the closure is configured to engage the liquid container to close the opening.

29. A closure for use with a liquid container, comprising:

an end wall;

a skirt wall depending from the end wall;

a spout extending upwardly from the end wall and terminating in an outlet opening, the spout defining a flow path through the end wall to the outlet opening;

a loop member extending upwardly from the end wall and defining an opening therethrough having a generally horizontal axis, the end wall, skirt wall and loop member being integrally molded as a unitary component;

a cap supported for rotational movement on the loop member, the cap being movable between a first position in which the spout is covered by the cap and a second position in which the spout is exposed and comprising:

a generally tubular cap wall; and

a plug seal supported by the cap wall, the plug seal being configured to seal with and close the outlet opening of the spout when the cap is moved to the first position; and

a pair of opposing arcuate connector members supported by the cap, at least one of the pair of connector members having a free end that is configured to flex relative to the cap for engagement of the pair of connector members about the loop member to releasably connect the cap to the loop member.

30. The closure of claim **29** wherein the cap wall is made of a first material and the plug seal is made of a second material.

31. The closure of claim **29** wherein the loop member is located adjacent the spout.

32. The closure of claim **29** wherein the loop member comprises a closed loop.

33. The closure of claim **29** wherein the pair of opposing arcuate connector members are located outwardly of the loop member.

34. The closure of claim **29** further comprising an arcuate rib projecting outwardly from the loop member.

35. The closure of claim **34** further comprising a slot formed in each of the pair of connector members, wherein at least a portion of the annular rib is located within the slot.

36. The closure of claim **29** further comprising a detent projecting outwardly from the loop member, wherein the detent is configured to engage the at least one connector member when the cap is moved to the second position.

37. The closure of claim **29** further comprising a liquid container having a liquid receiving interior and an opening, wherein the closure is configured to engage the liquid container to close the opening.

* * * * *

UNITED STATES PATENT AND TRADEMARK OFFICE

CERTIFICATE OF CORRECTION

PATENT NO. : 7,753,240 B2
APPLICATION NO. : 11/342080
DATED : July 13, 2010
INVENTOR(S) : Leoncavallo et al.

It is certified that error appears in the above-identified patent and that said Letters Patent is hereby corrected as shown below:

In column 5, line 40, change "with the connector member 80 aid in keeping" to --with the connector member 80 aids in keeping--.

In column 6, line 64, change "when the closure 10 is secured is to the container" to --when the closure 10 is secured to the container--.

In column 7, line 55, claim 3, change "The close of claim 2" to --The closure of claim 2--.

In column 8, line 15, claim 13, change "arcuate connector members are located outwardly" to --arcuate connector members is located--.

In column 8, line 38, claim 20, change "A skirt wall depending from the end wall;" to --a skirt wall depending from the end wall--.

In column 10, line 15, claim 33, change "arcuate connector members are located" to --arcuate connector members is located--.

Signed and Sealed this

Twenty-sixth Day of October, 2010

David J. Kappos

David J. Kappos
Director of the United States Patent and Trademark Office