US 20130150691A1

(19) United States

(12) Patent Application Publication

Pace et al.

(10) Pub. No.: US 2013/0150691 A1

(43) Pub. Date: Jun. 13, 2013

(54) **ANALYTE SENSOR DEVICES, CONNECTIONS, AND METHODS**

(71) Applicant: **Abbott Diabetes Care Inc.**, Alameda, CA (US)

(72) Inventors: **Louis Pace**, San Carlos, CA (US); **Peter G. Robinson**, Alamo, CA (US); **Udo Hoss**, Castro Valley, CA (US); **Samuel Mason Curry**, San Francisco, CA (US); **Phillip William Carter**, Oakland, CA (US); **Vincent Michael DiPalma**, Hayward, CA (US); **Amit Mhatre**, Sunnyvale, CA (US); **Jennifer Olson**, San Francisco, CA (US); **Manuel Luis Miguel Donnay**, San Francisco, CA (US); **Marc Barry Taub**, Mountain View, CA (US)

(73) Assignee: **Abbott Diabetes Care Inc.**, Alameda, CA (US)

(21) Appl. No.: **13/710,460**

(22) Filed: **Dec. 11, 2012**

Related U.S. Application Data

(60) Provisional application No. 61/569,287, filed on Dec. 11, 2011.

Publication Classification

(51) **Int. Cl.**
A61B 5/145 (2006.01)

(52) **U.S. Cl.**
CPC *A61B 5/14532* (2013.01)
USPC **600/347**

(57) **ABSTRACT**

Devices associated with on-body analyte sensor units are disclosed. These devices include any of packaging and/or loading systems, applicators and elements of the on-body sensor units themselves. Also, various approaches to connecting electrochemical analyte sensors to and/or within associated on-body analyte sensor units are disclosed. The connector approaches variously involve the use of unique sensor and ancillary element arrangements to facilitate assembly of separate electronics assemblies and sensor elements that are kept apart until the end user brings them together.

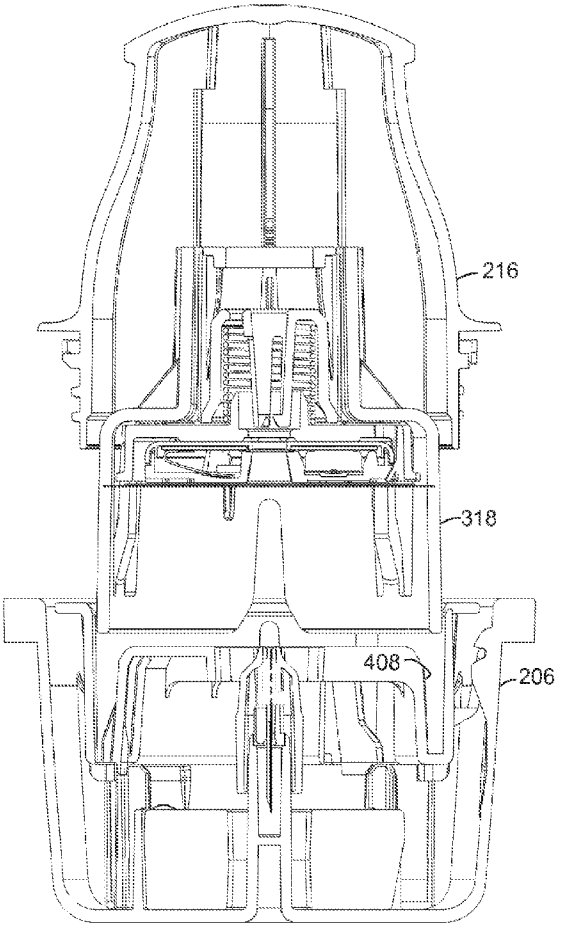

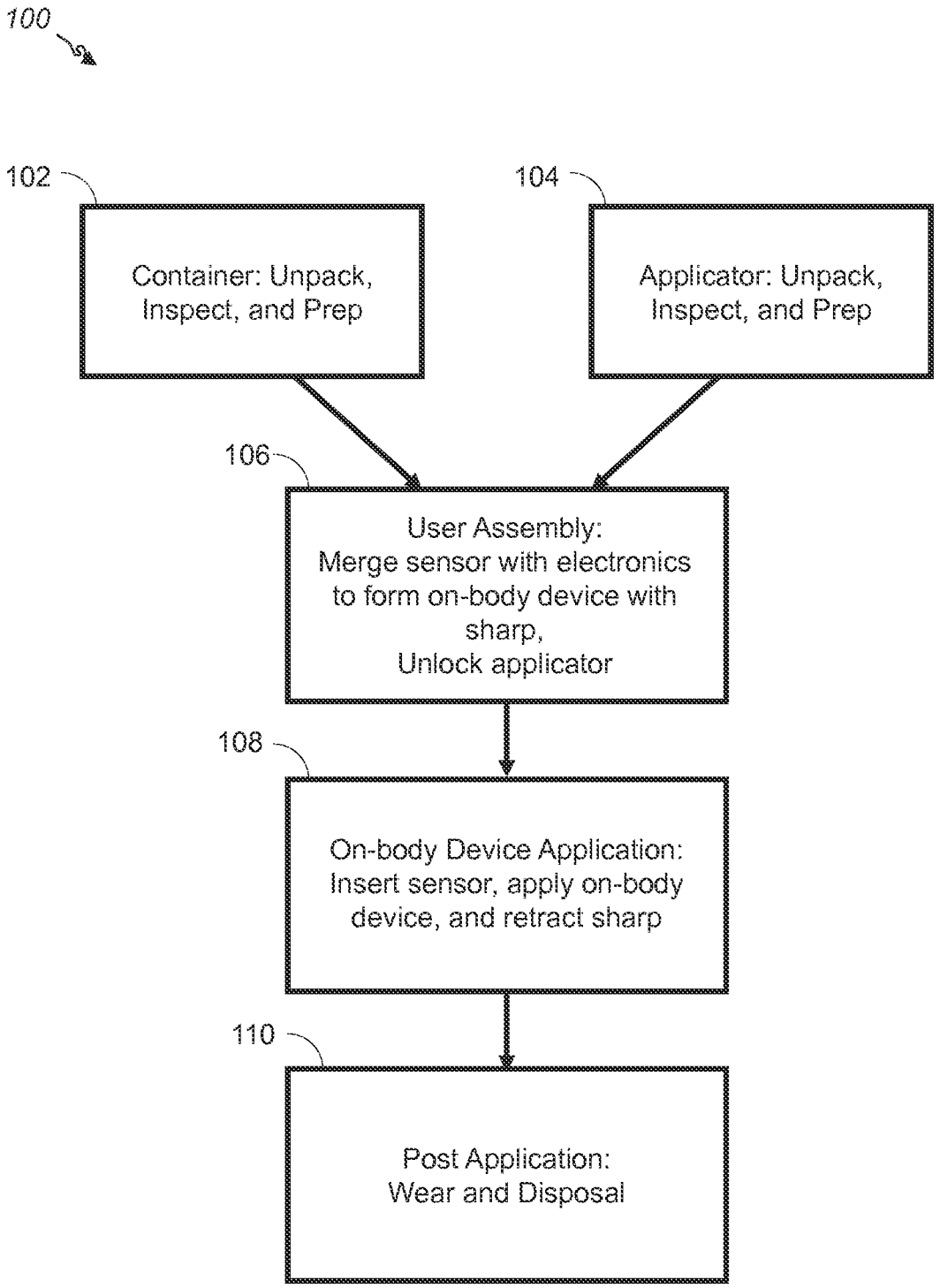
100
102
Container: Unpack, Inspect, and Prep
104
Applicator: Unpack, Inspect, and Prep
106
User Assembly: Merge sensor with electronics to form on-body device with sharp, Unlock applicator
108
On-body Device Application: Insert sensor, apply on-body device, and retract sharp
110
Post Application: Wear and Disposal

FIG. 1

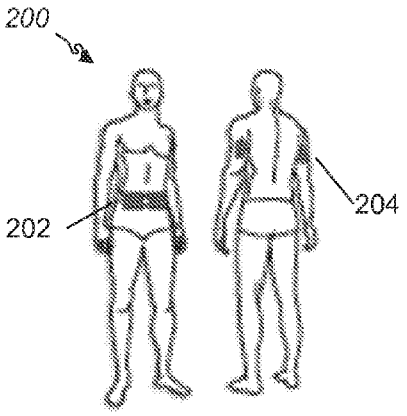

FIG. 2A

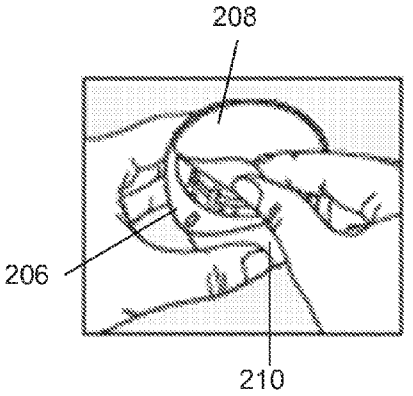

FIG. 2B

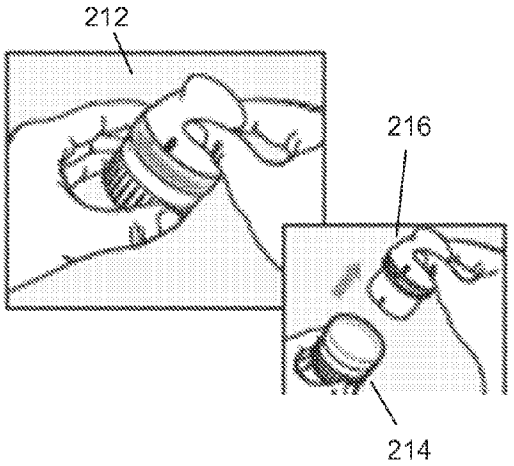

FIG. 2C

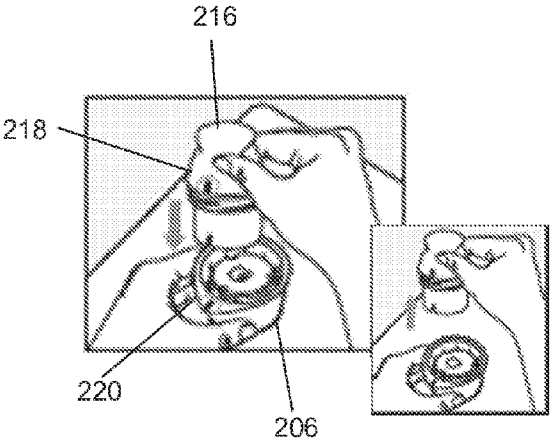

FIG. 2D

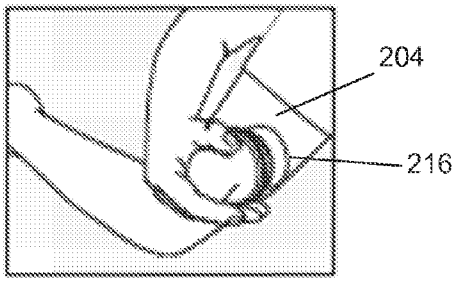

FIG. 2E

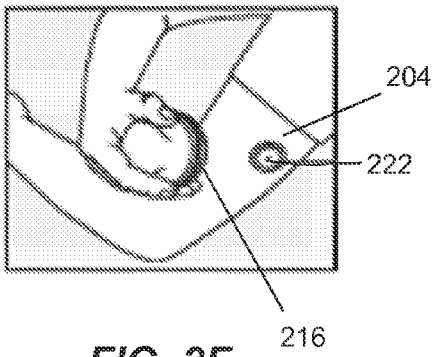

FIG. 2F

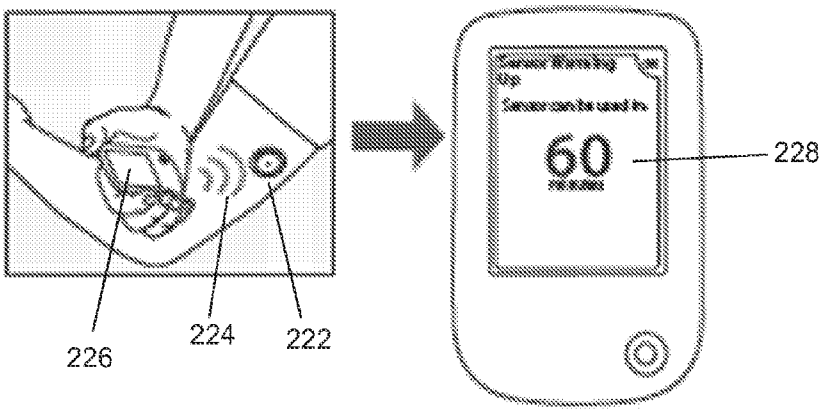

FIG. 2G

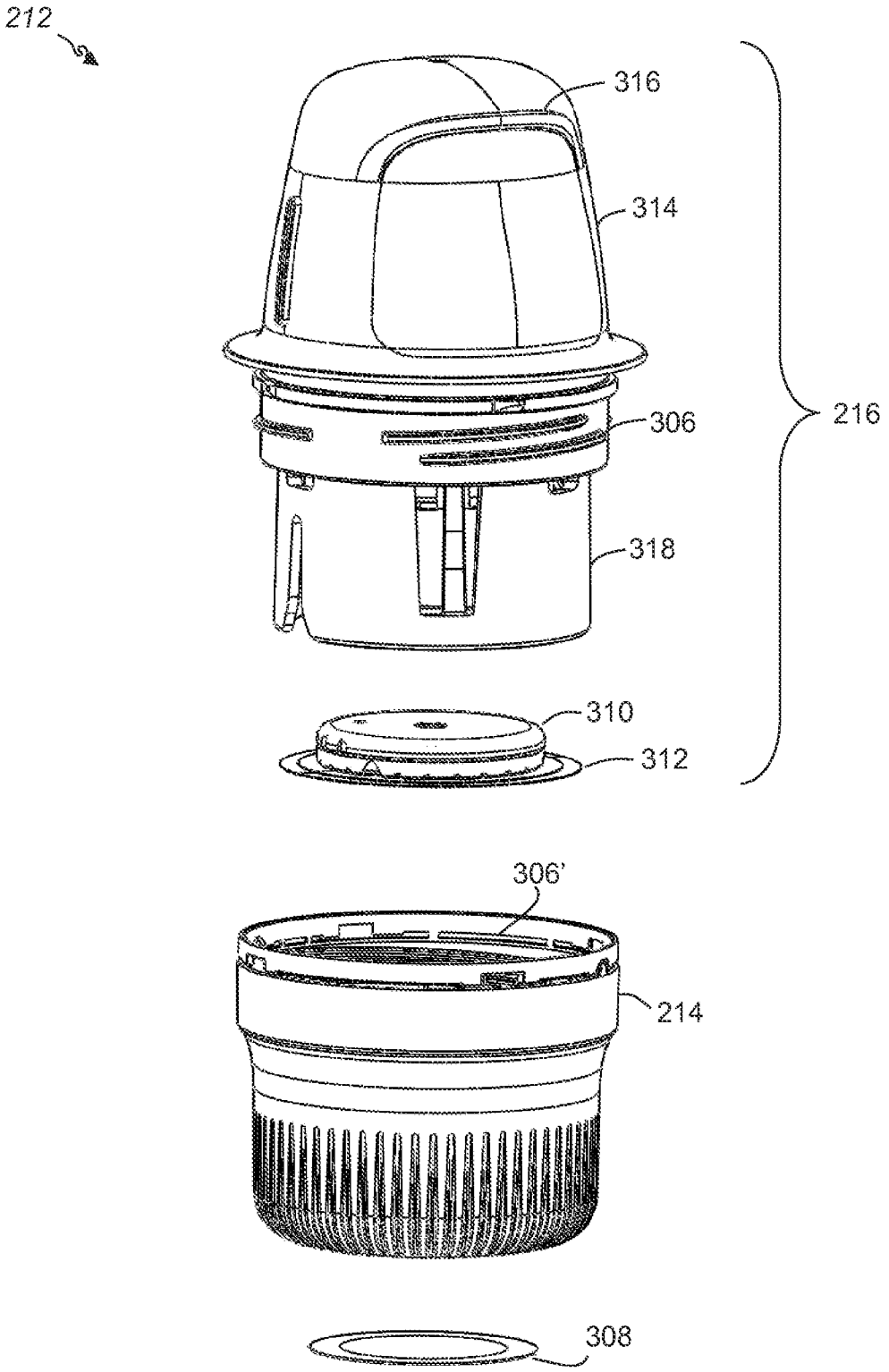

FIG. 3

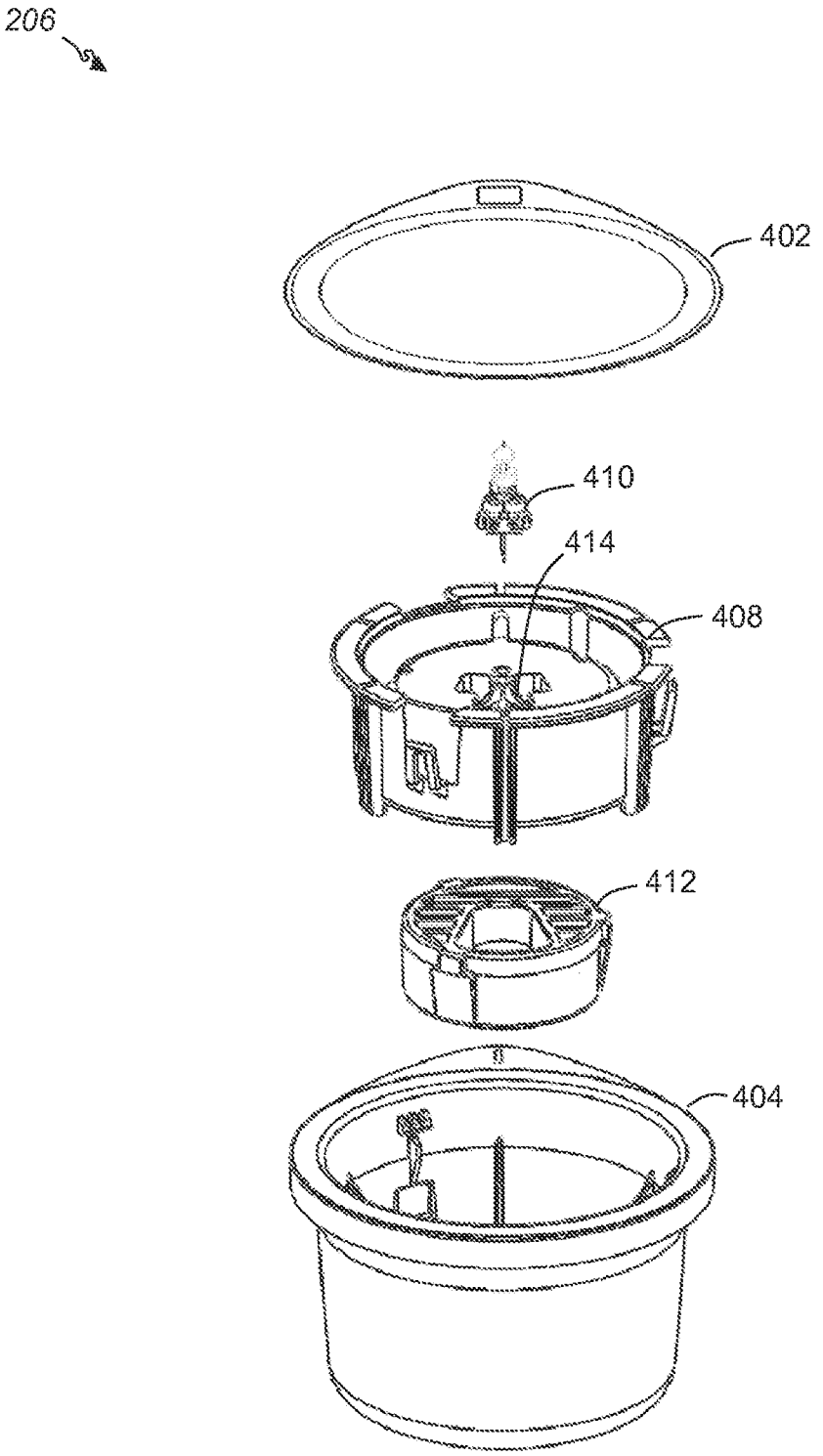

FIG. 4

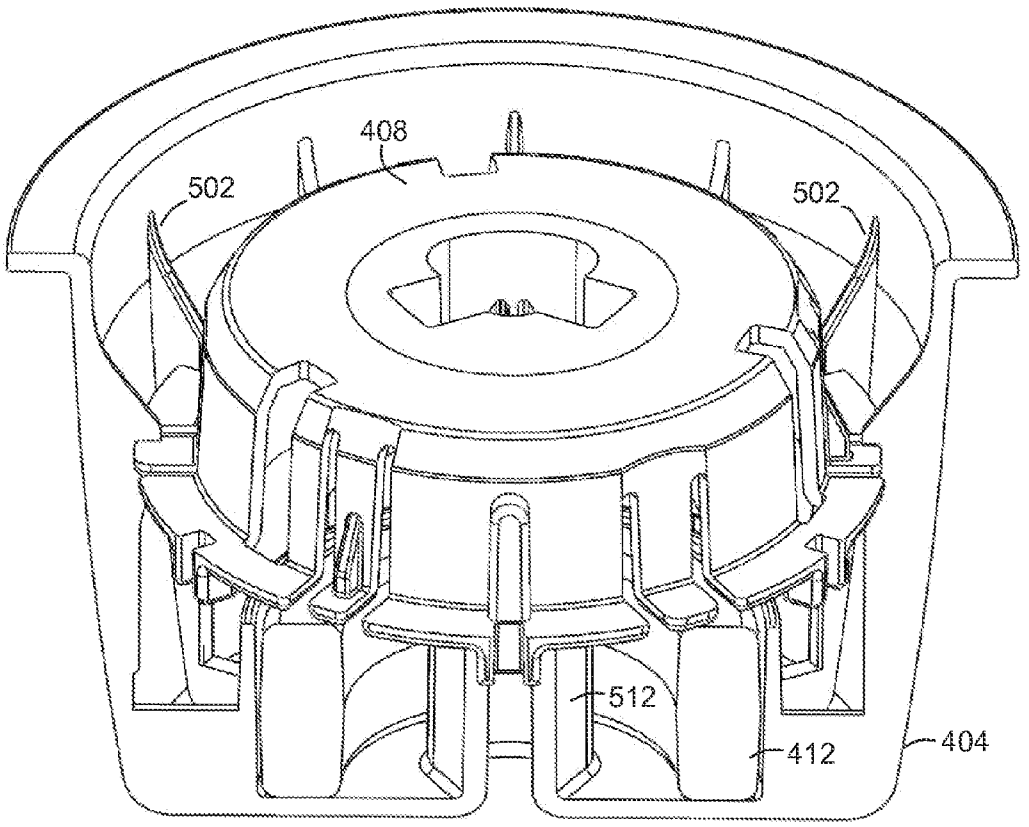

FIG. 5A

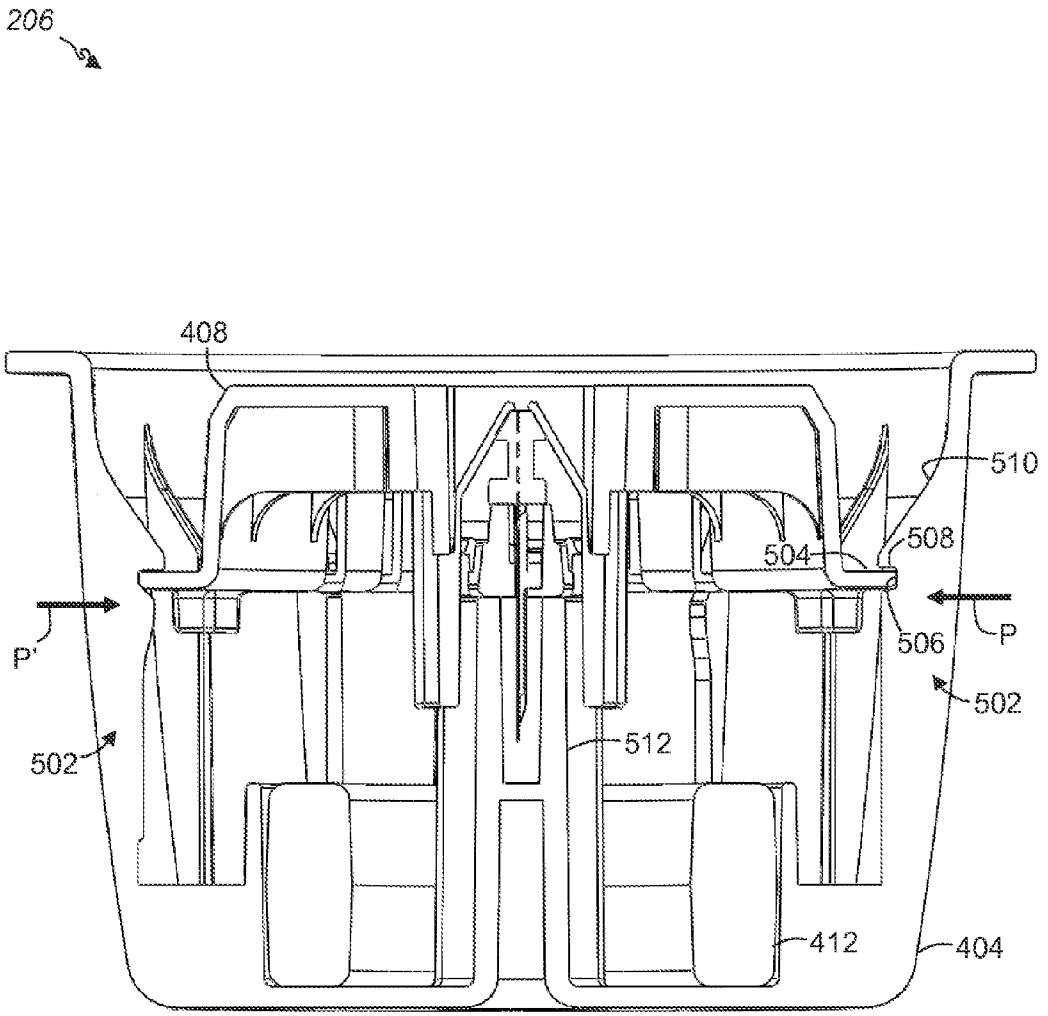

FIG. 5B

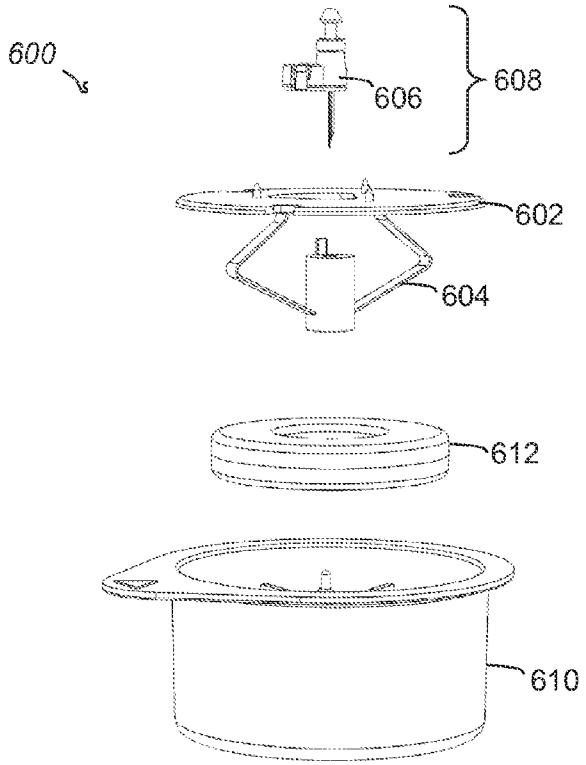

FIG. 6

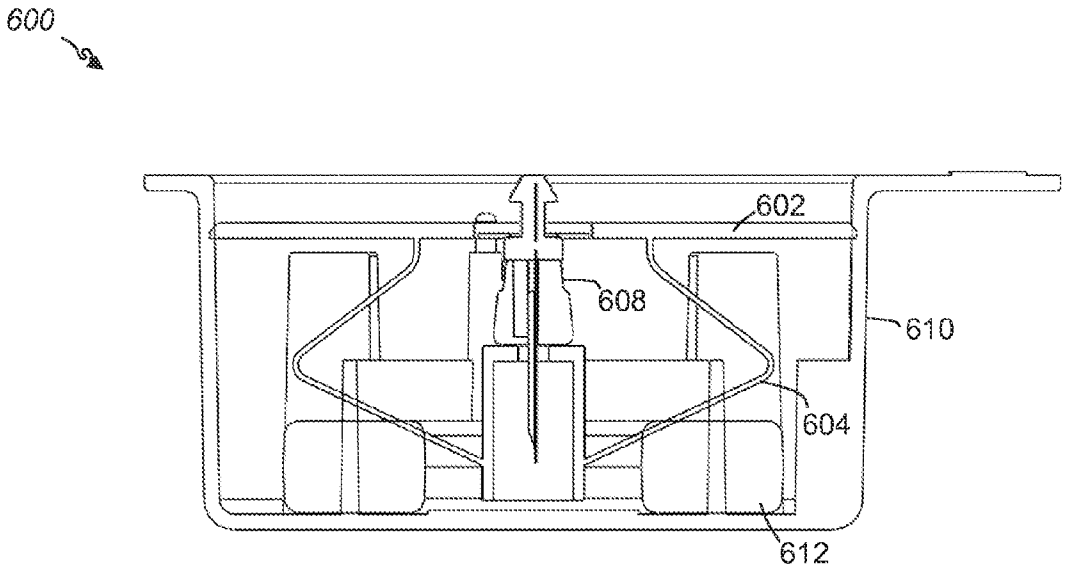

FIG. 7

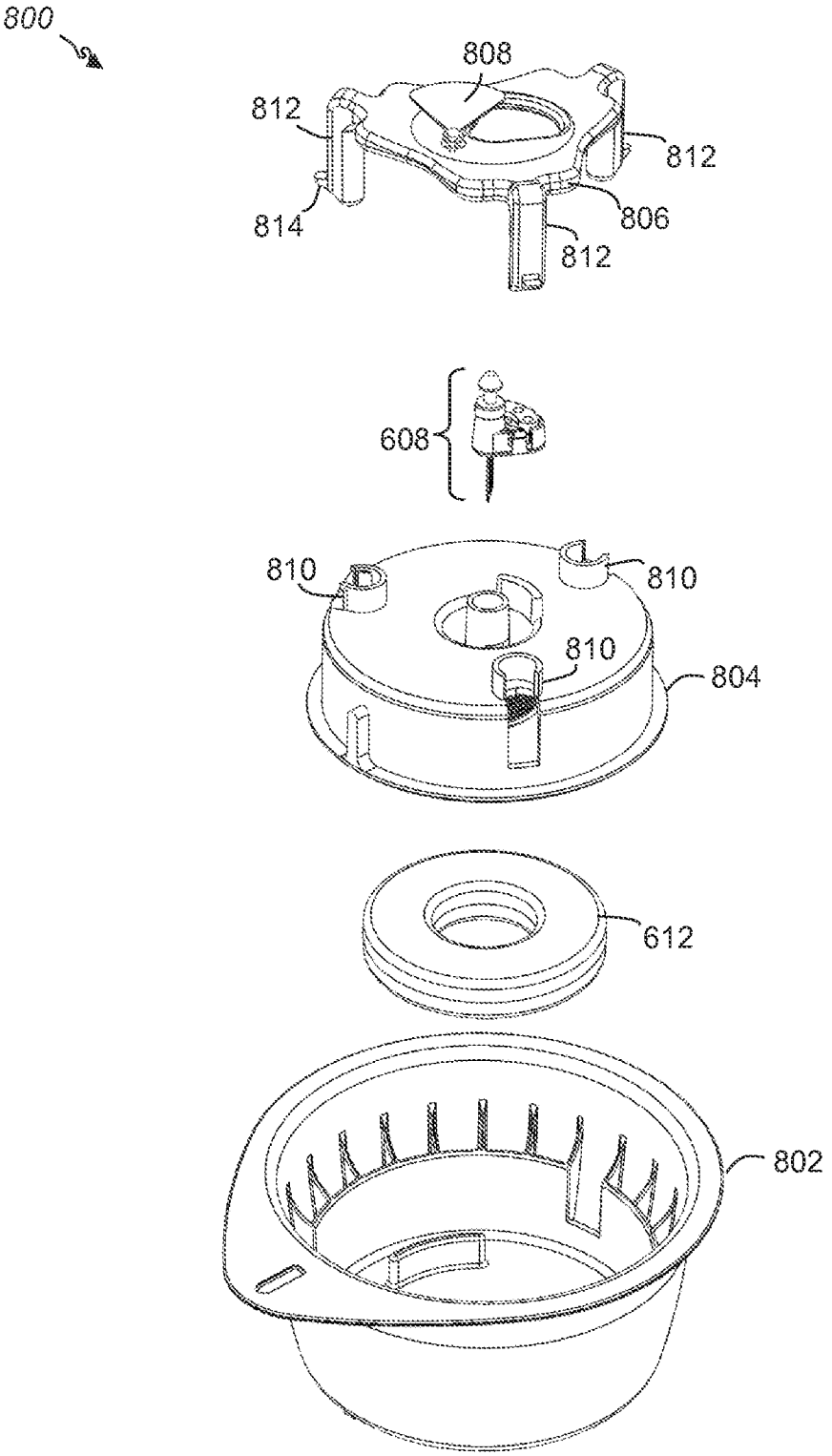

FIG. 8

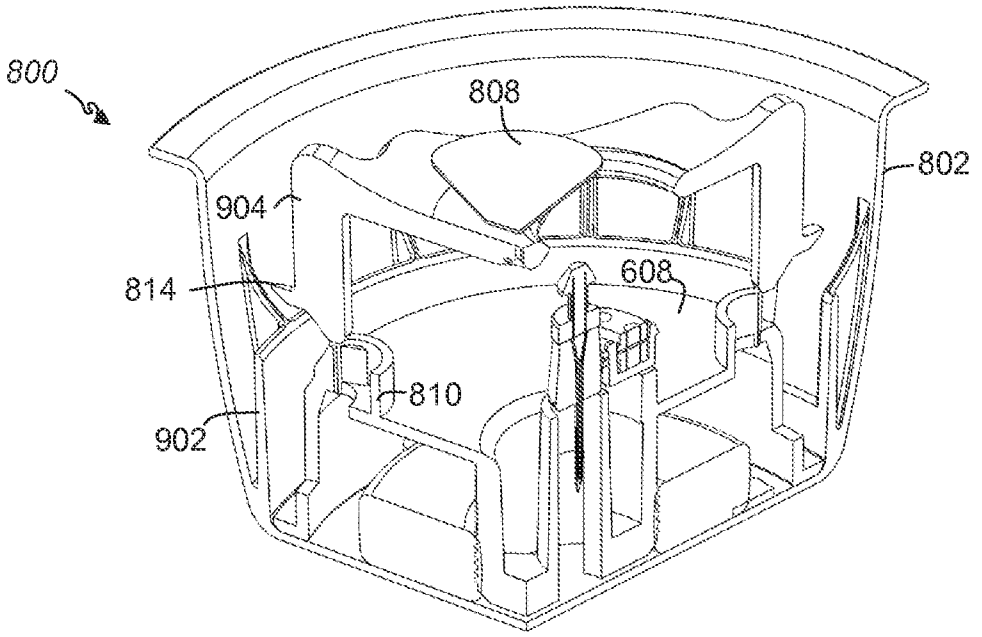
800
808
802
904
814
608
810
902

FIG. 9A

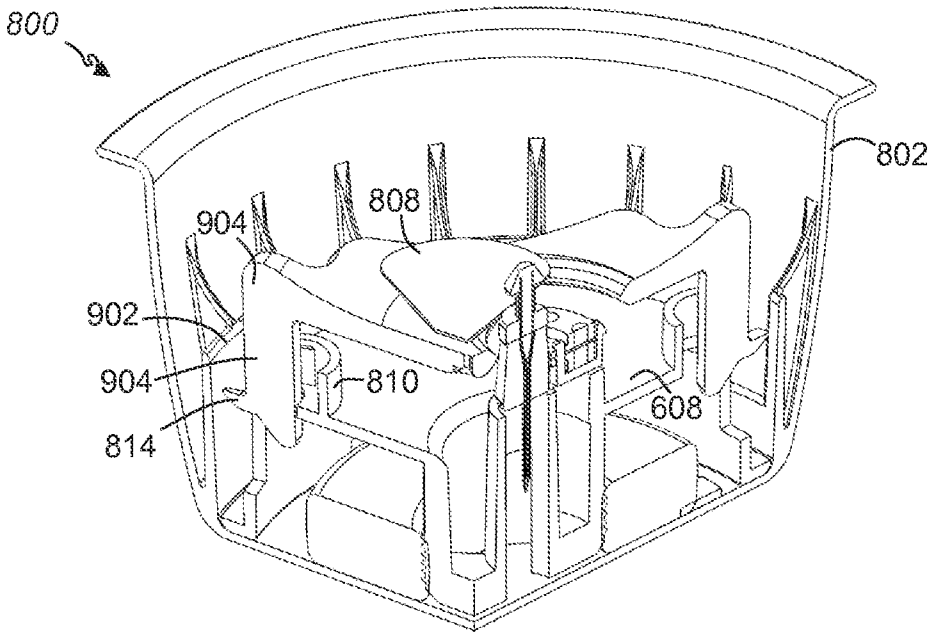
800
802
808
904
902
904
810
608
814

FIG. 9B

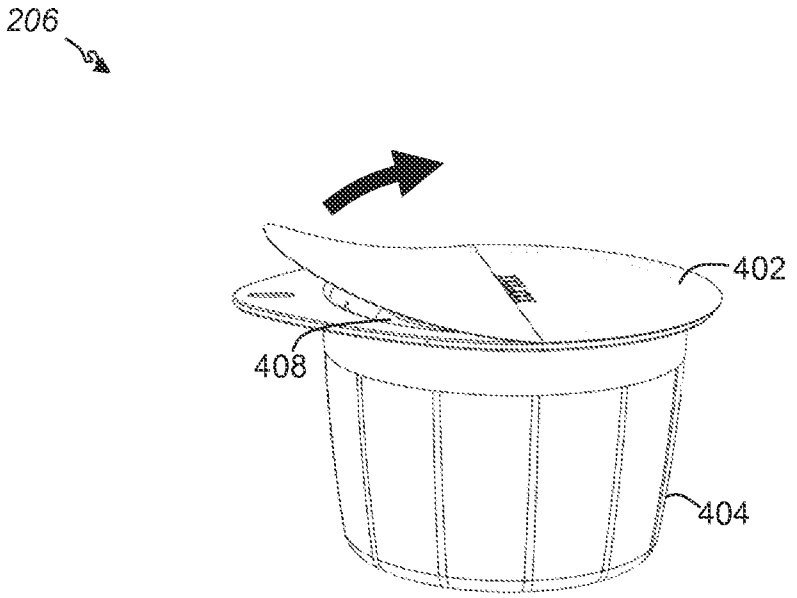

FIG. 10A

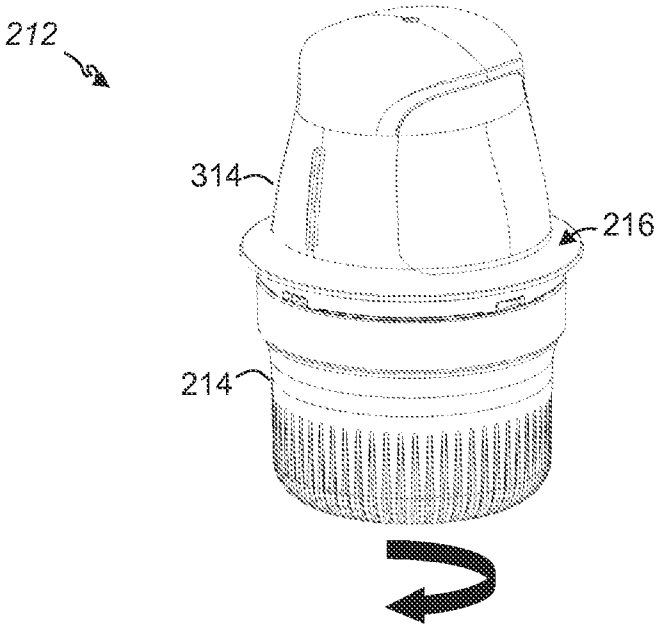

FIG. 10B

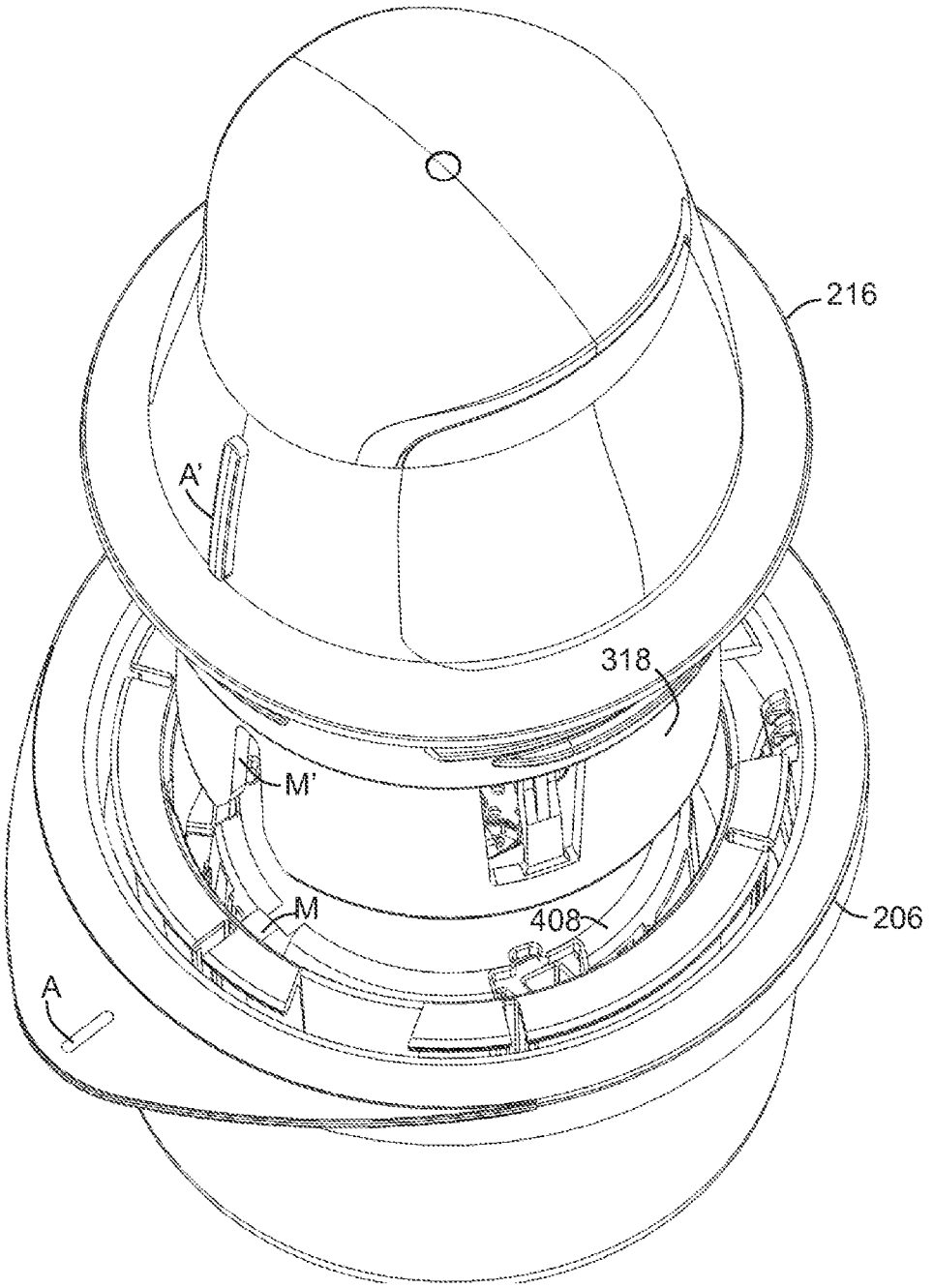

FIG. 10C

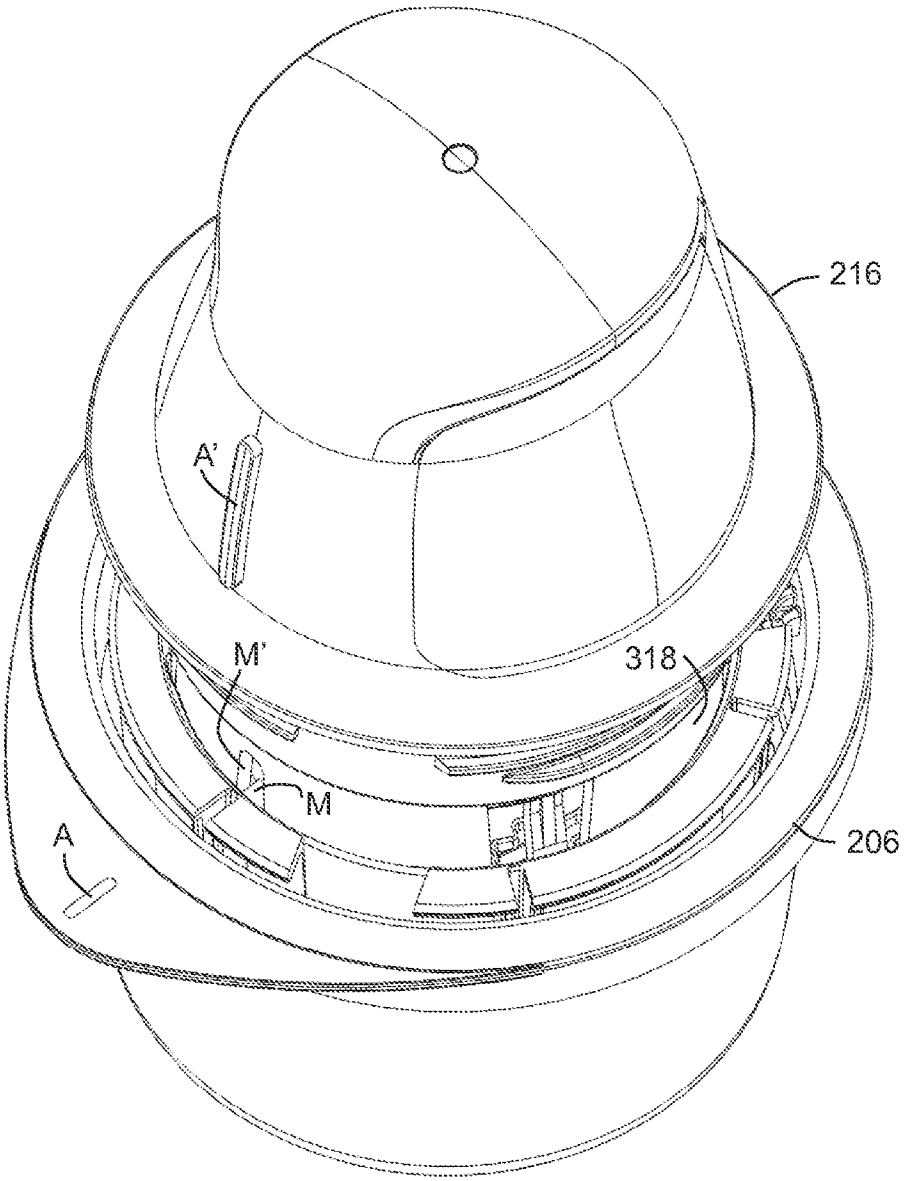

FIG. 10D

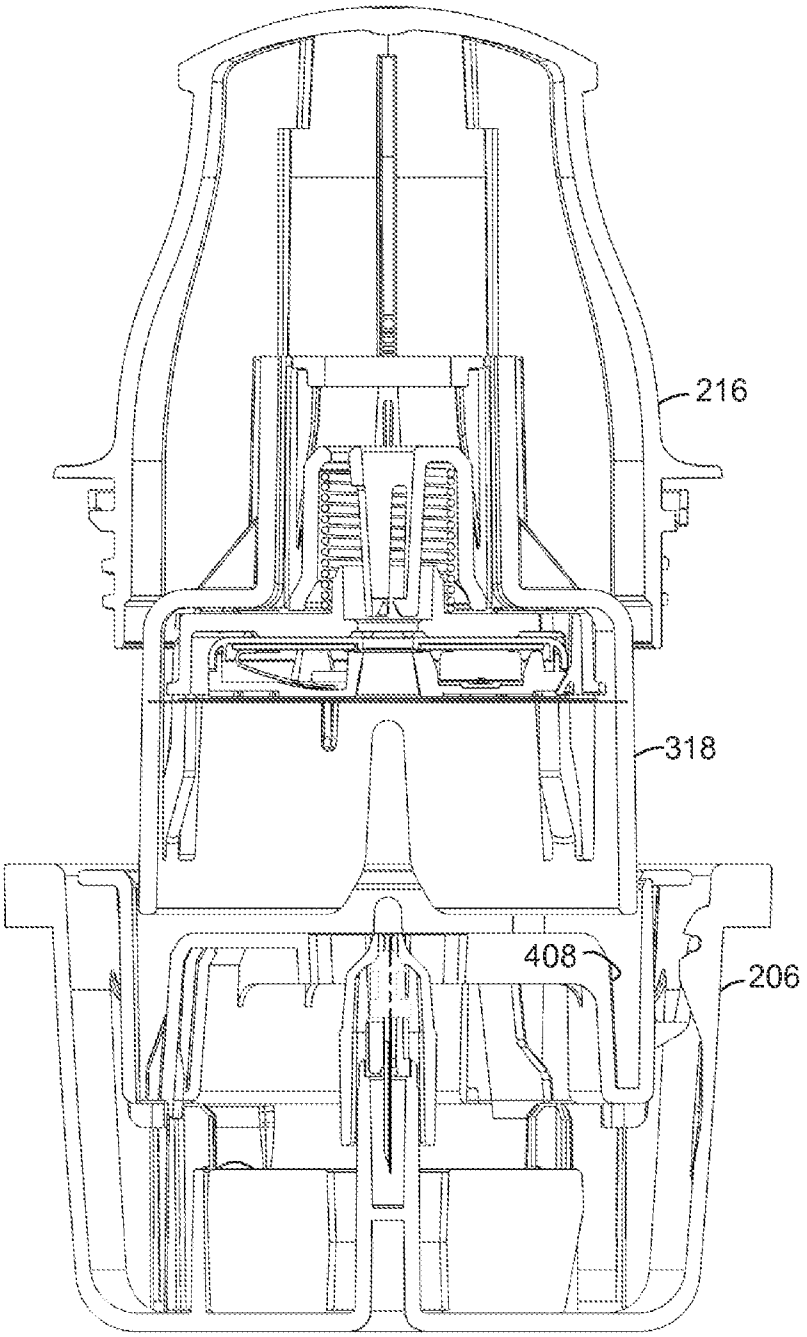

FIG. 10E

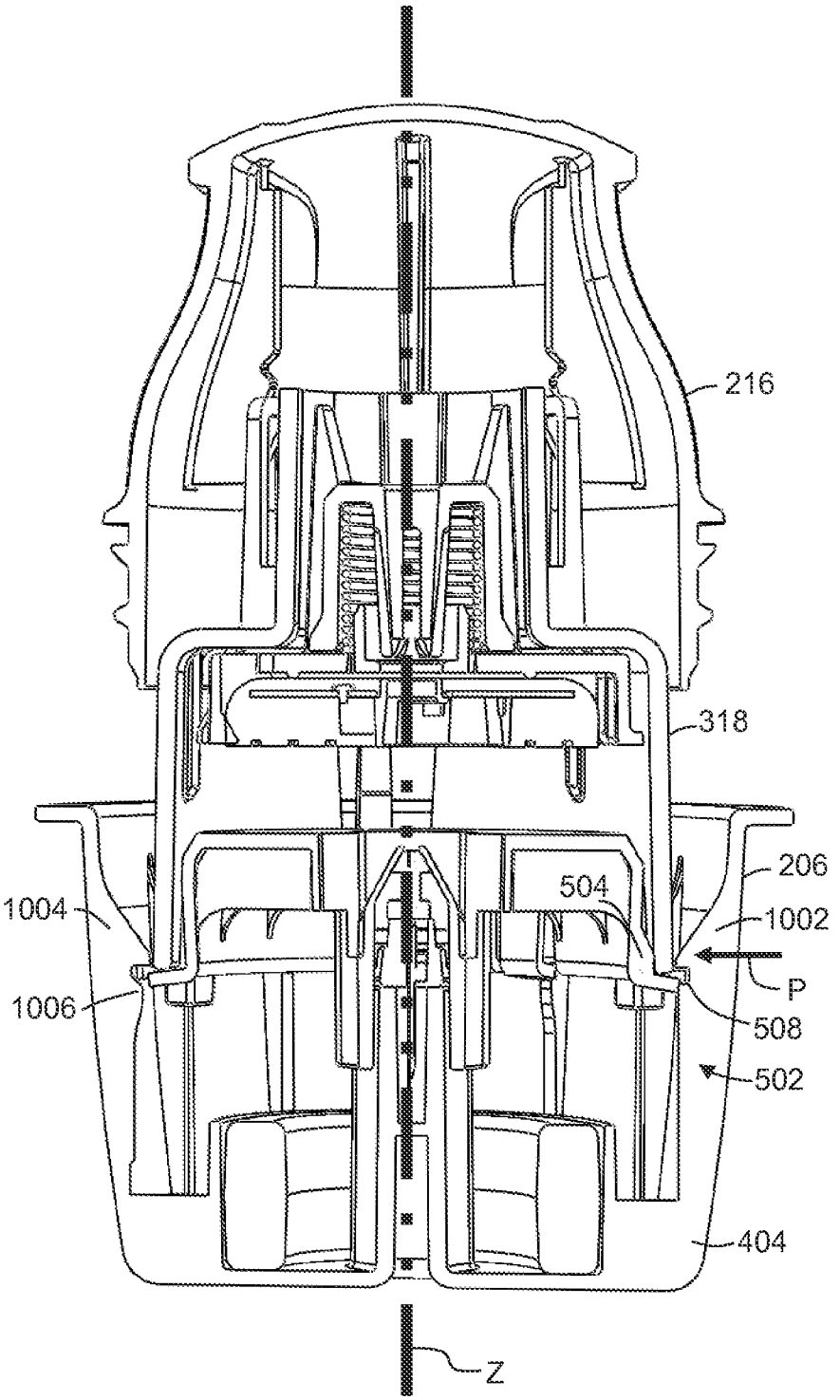

FIG. 10F

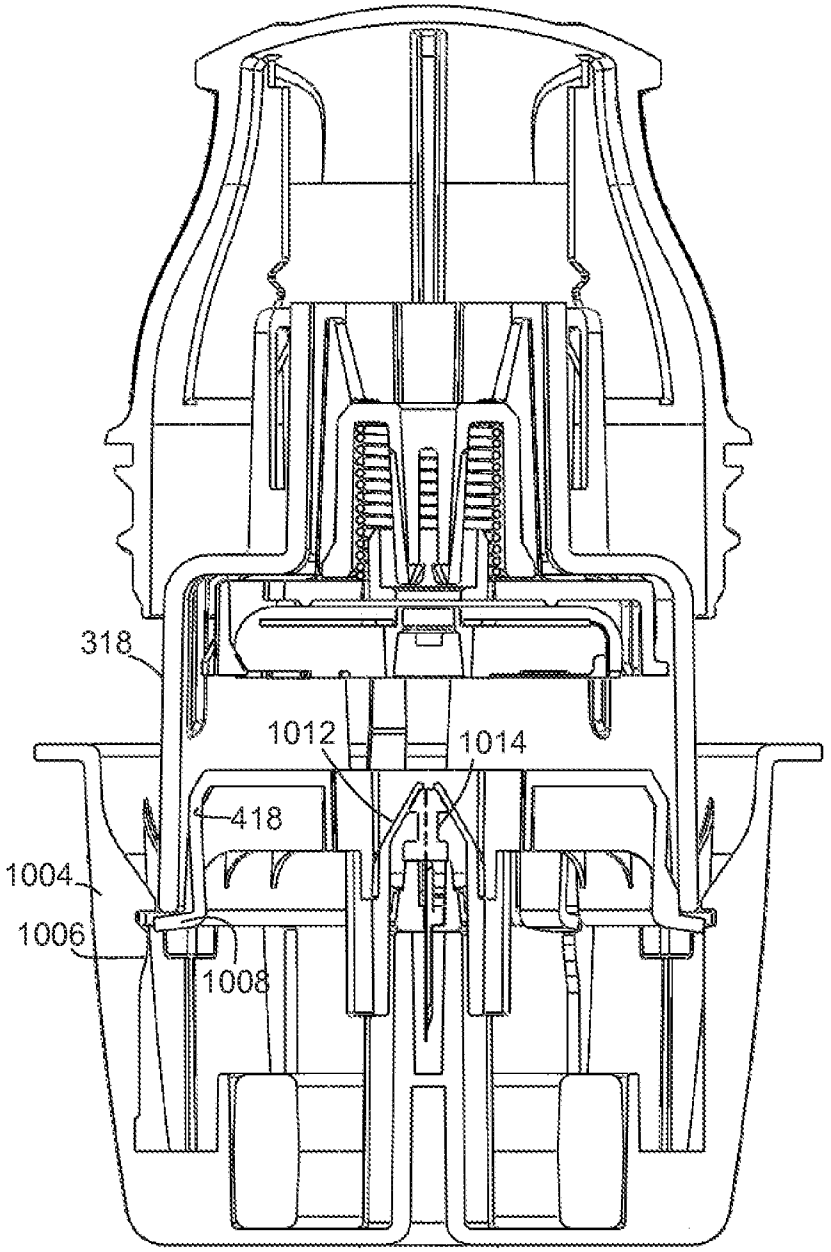

FIG. 10G

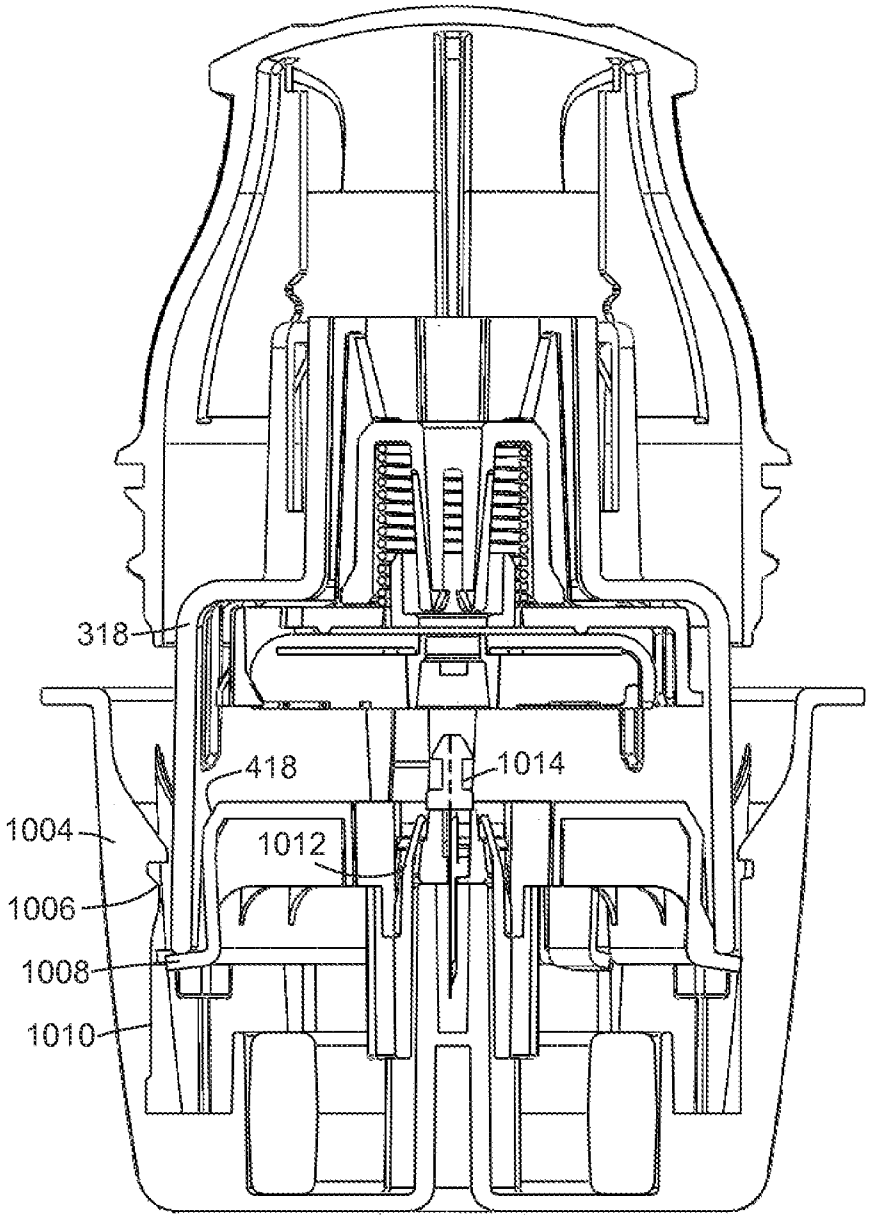

FIG. 10H

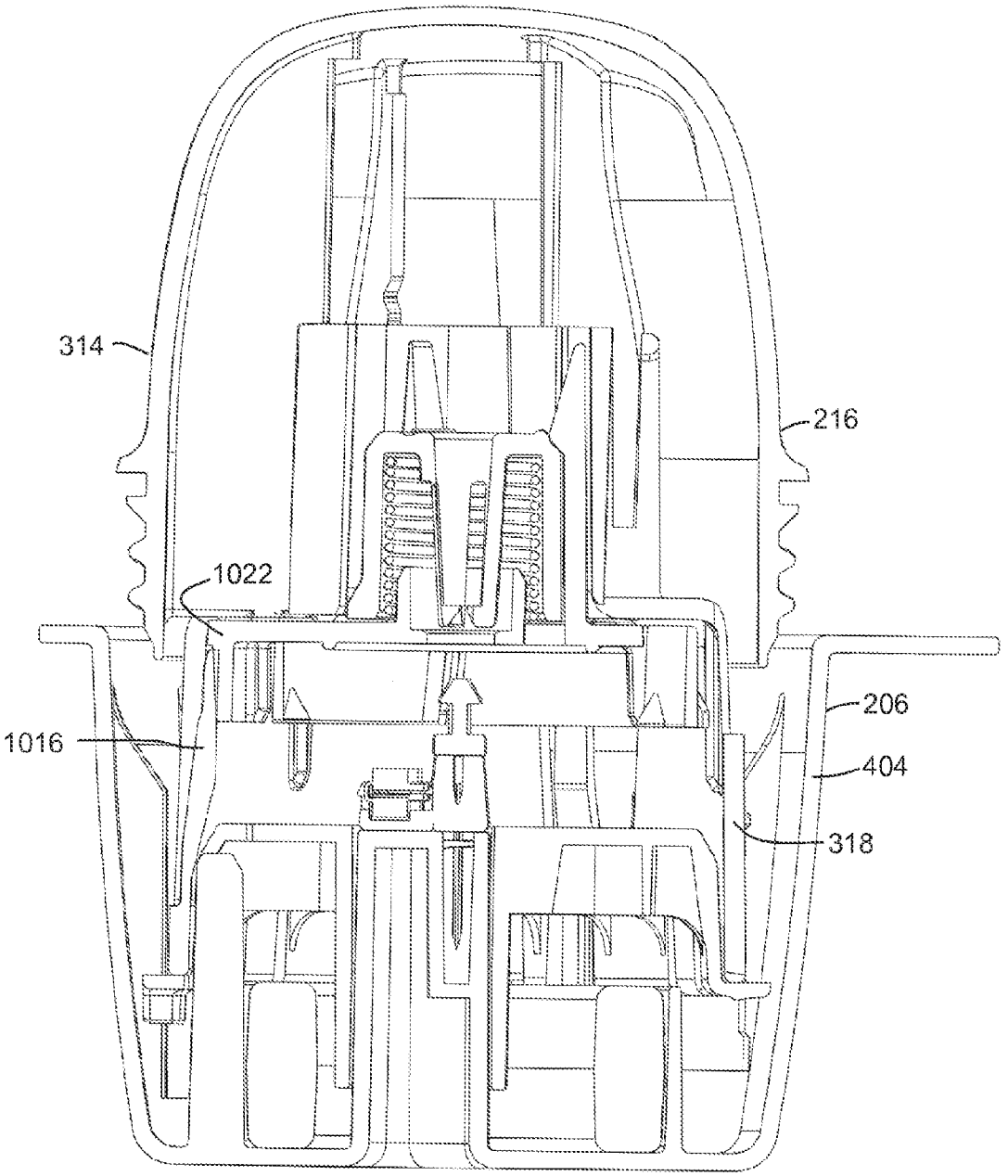

FIG. 10I

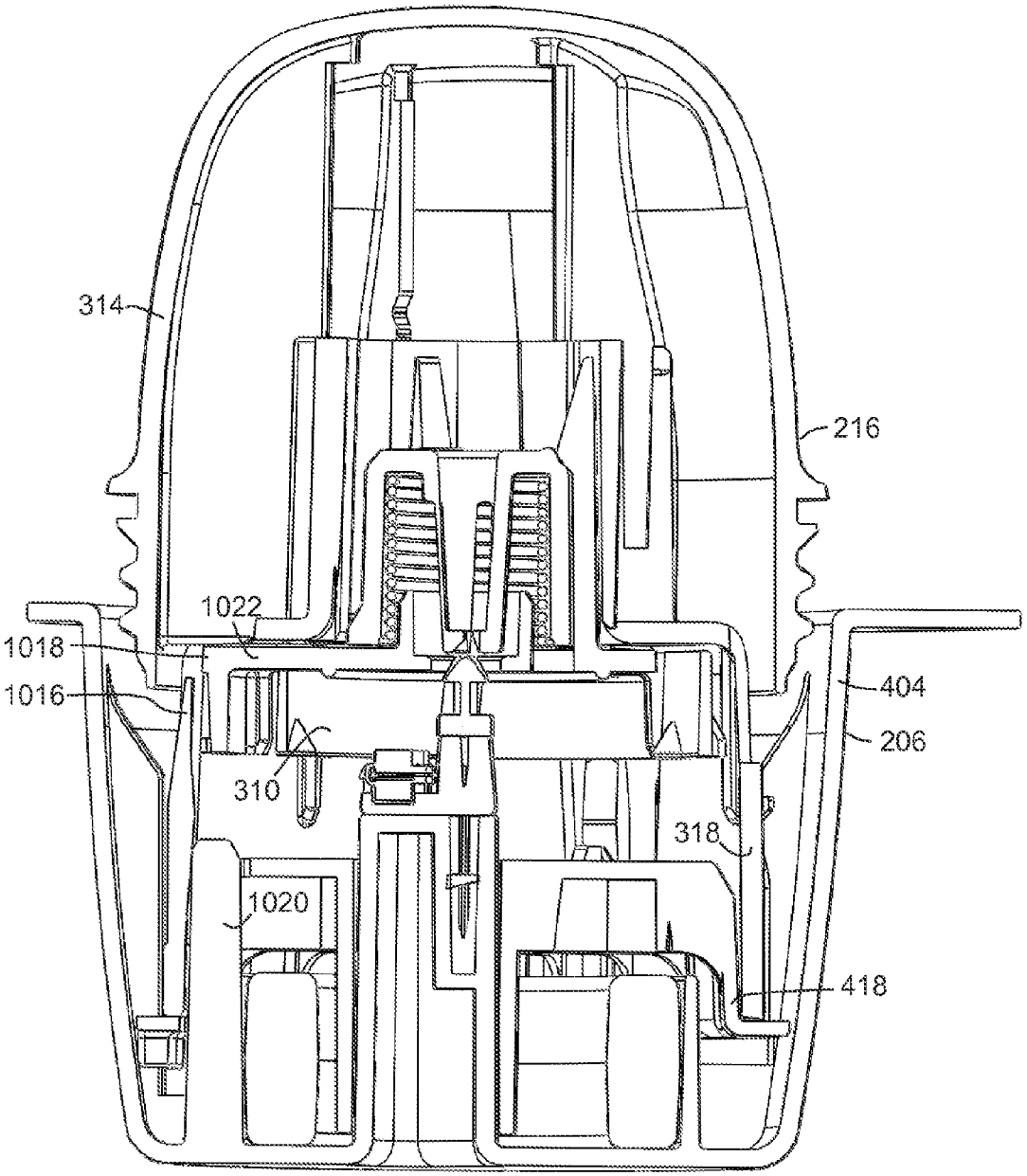

FIG. 10J

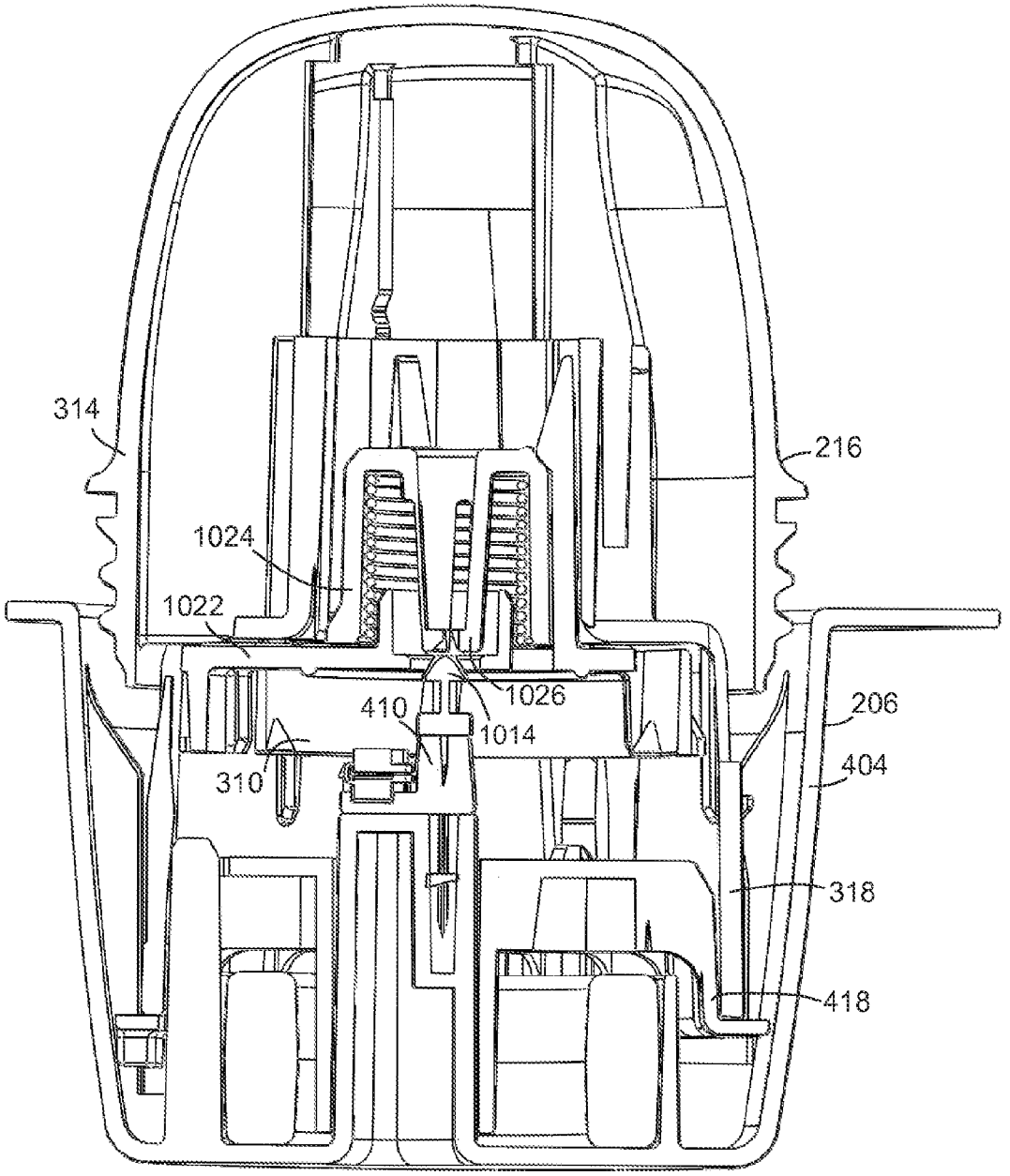

FIG. 10K

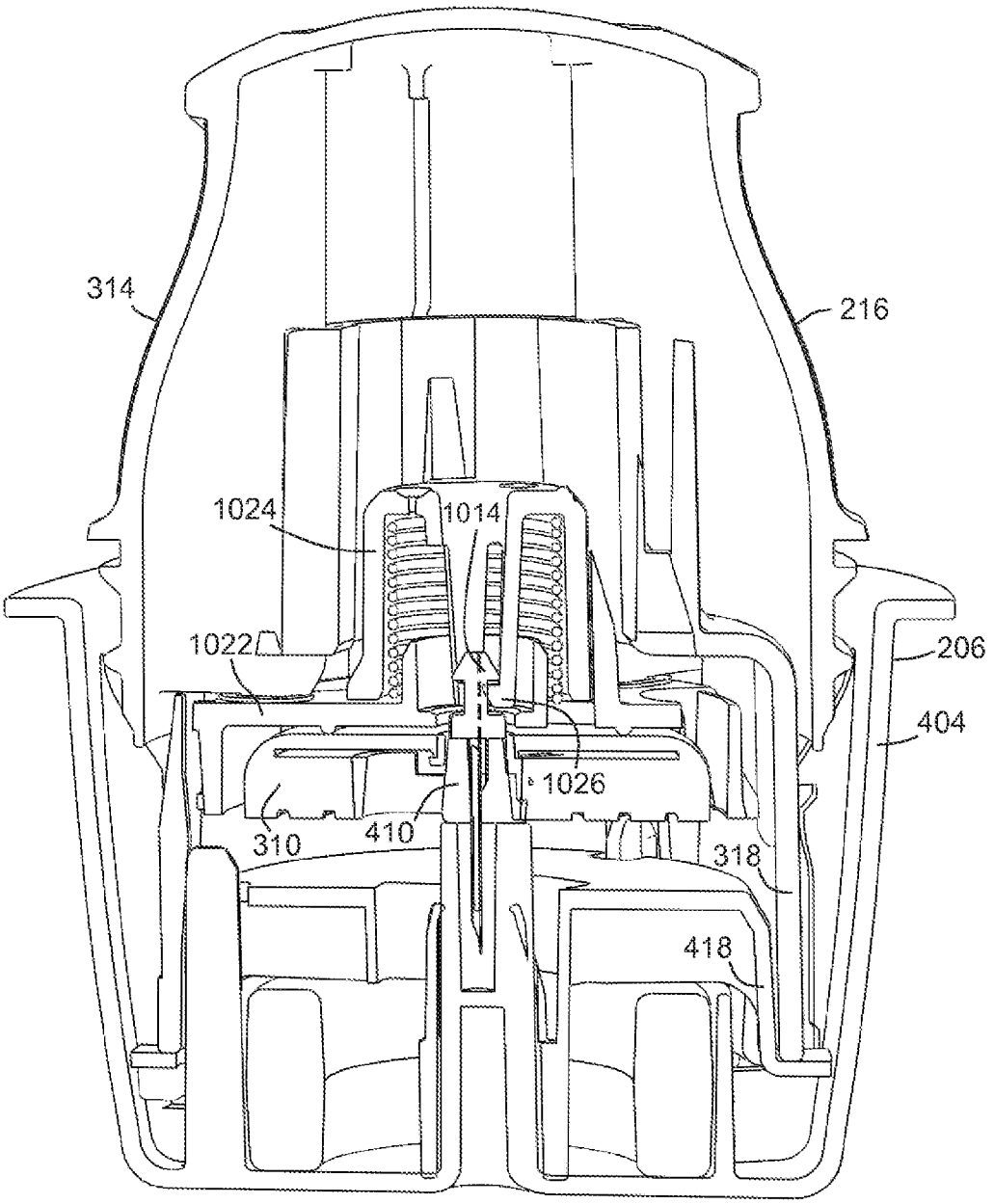

FIG. 10L

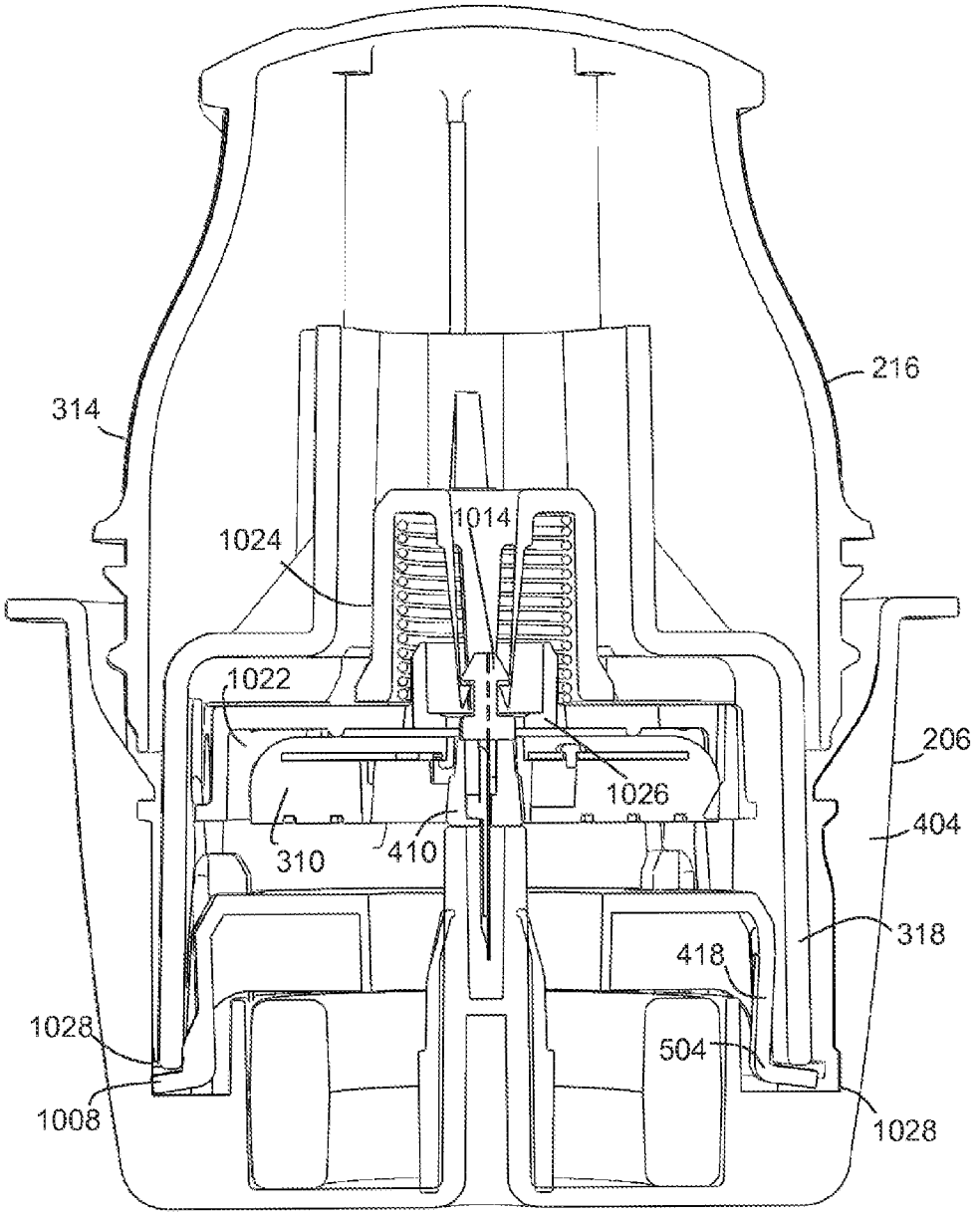
314
216
1014
1024
1022
206
1026
404
310
410
318
418
1028
504
1008
1028

FIG. 10M

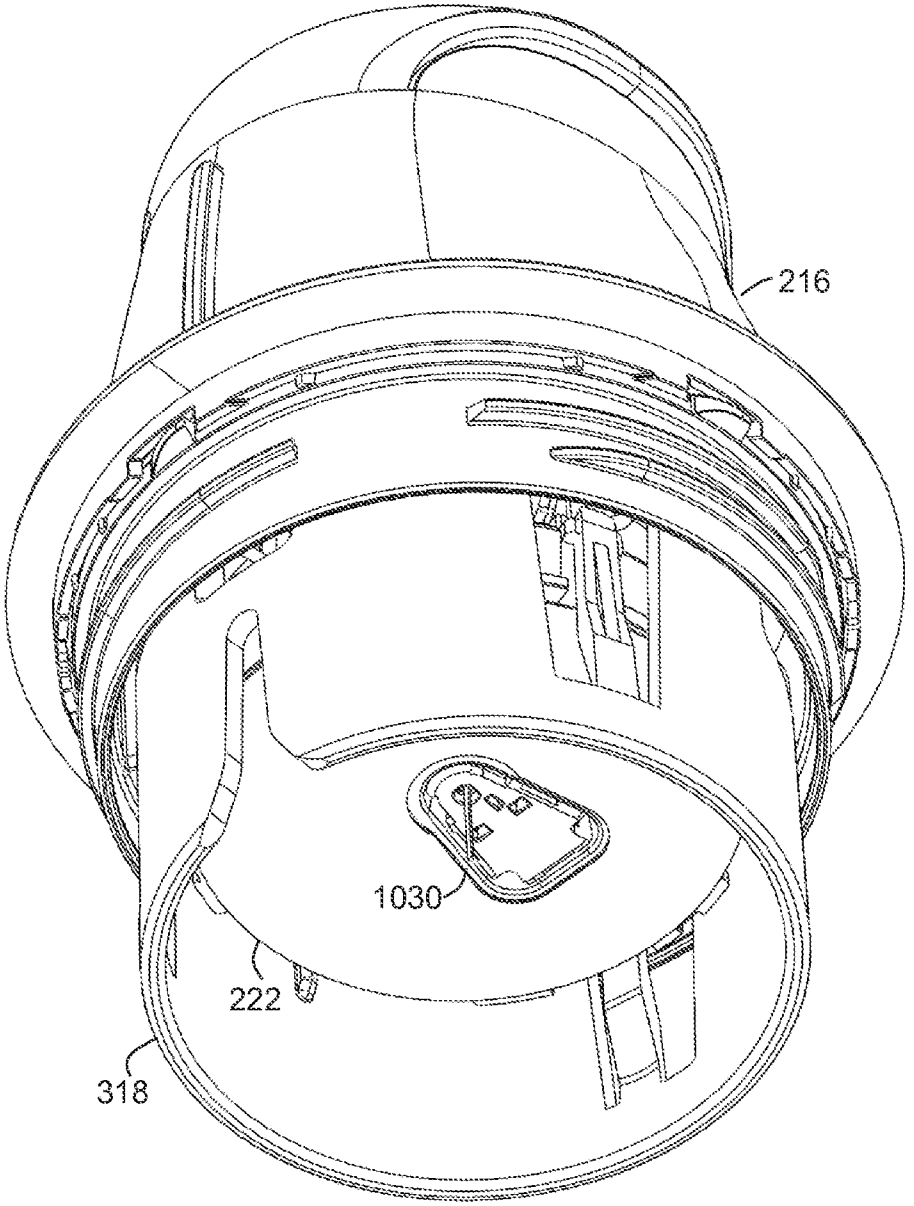

FIG. 10N

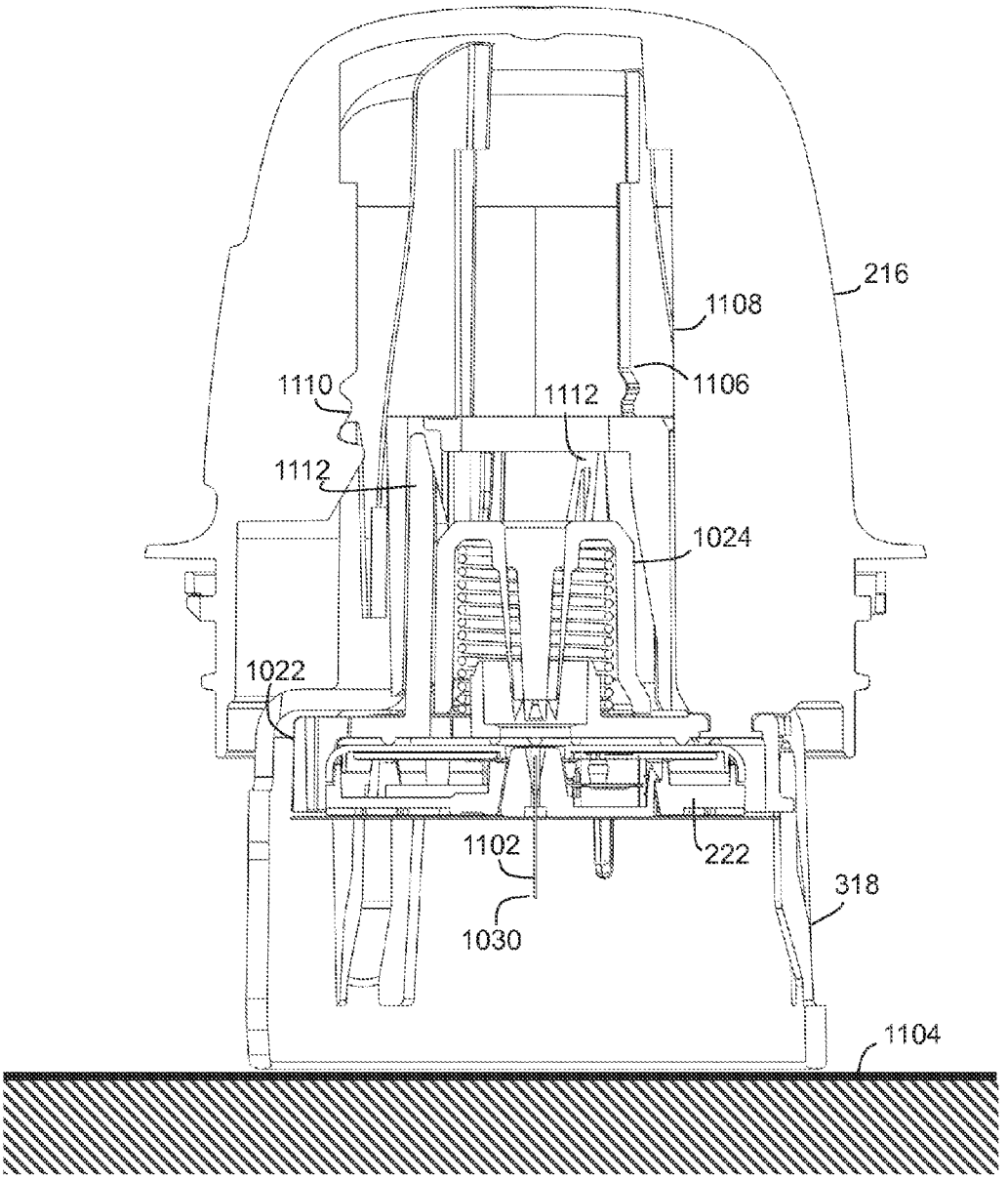

FIG. 11A

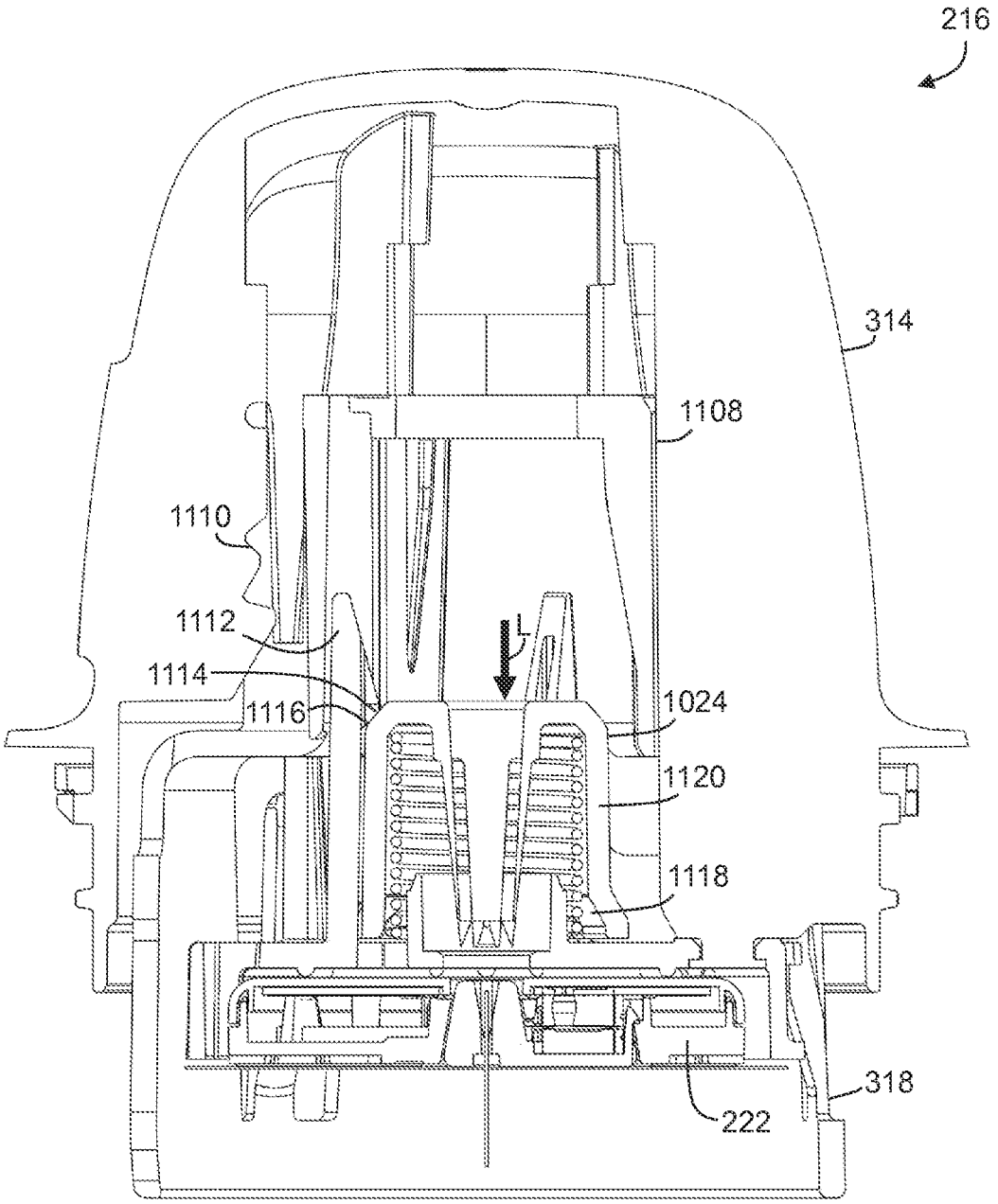

FIG. 11B

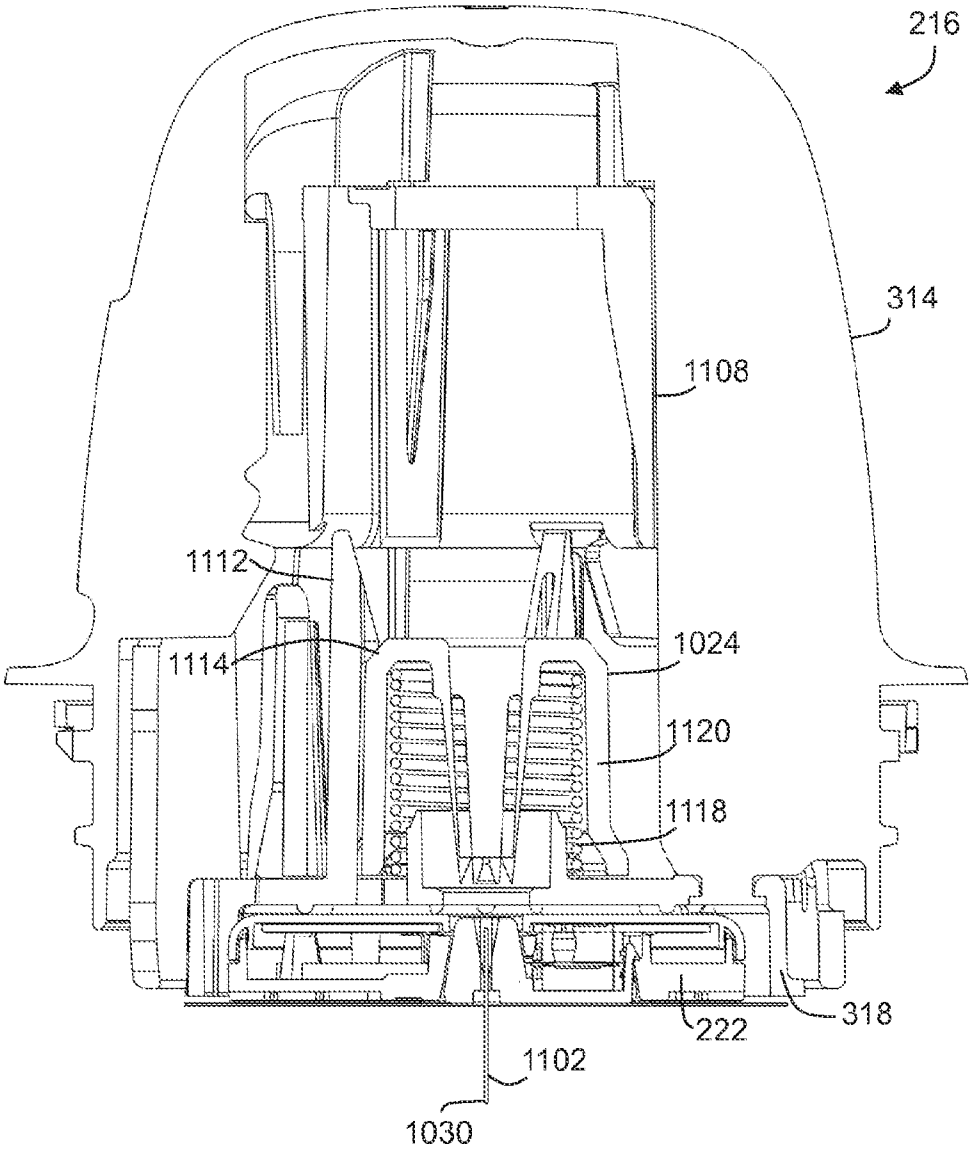

FIG. 11C

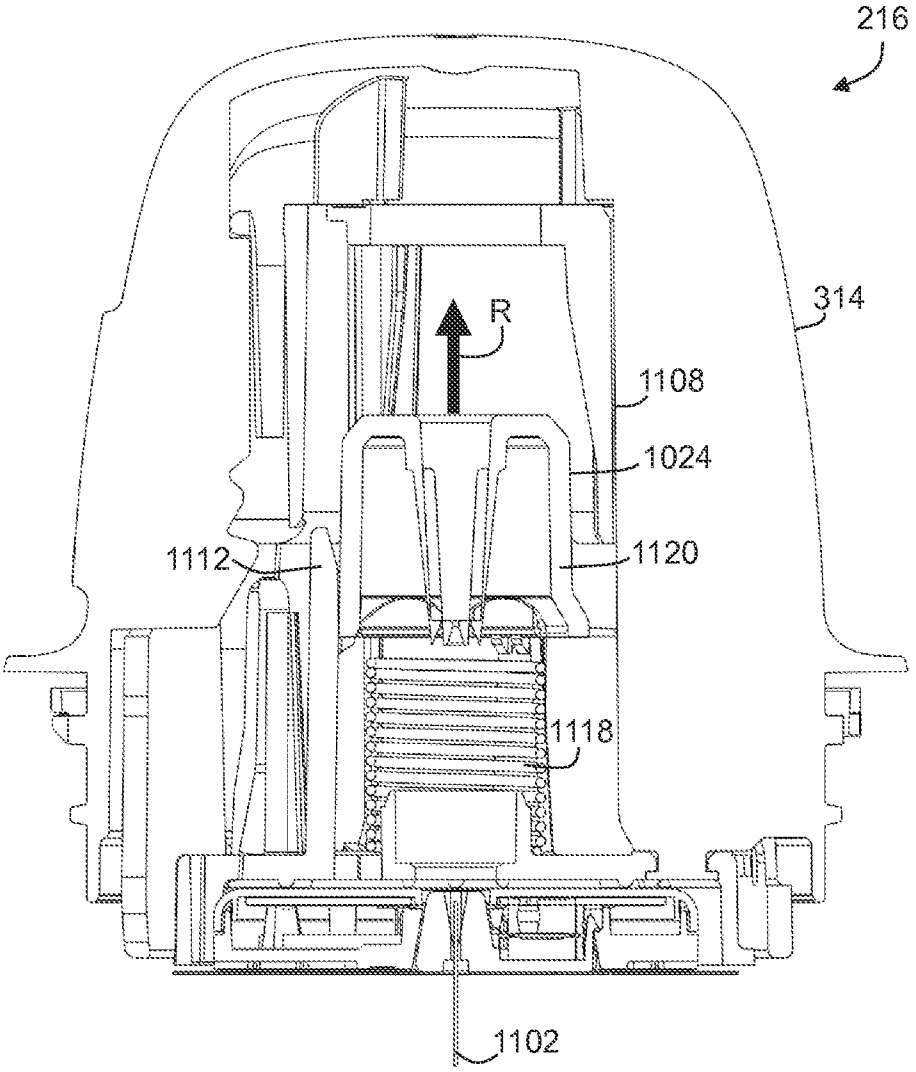

FIG. 11D

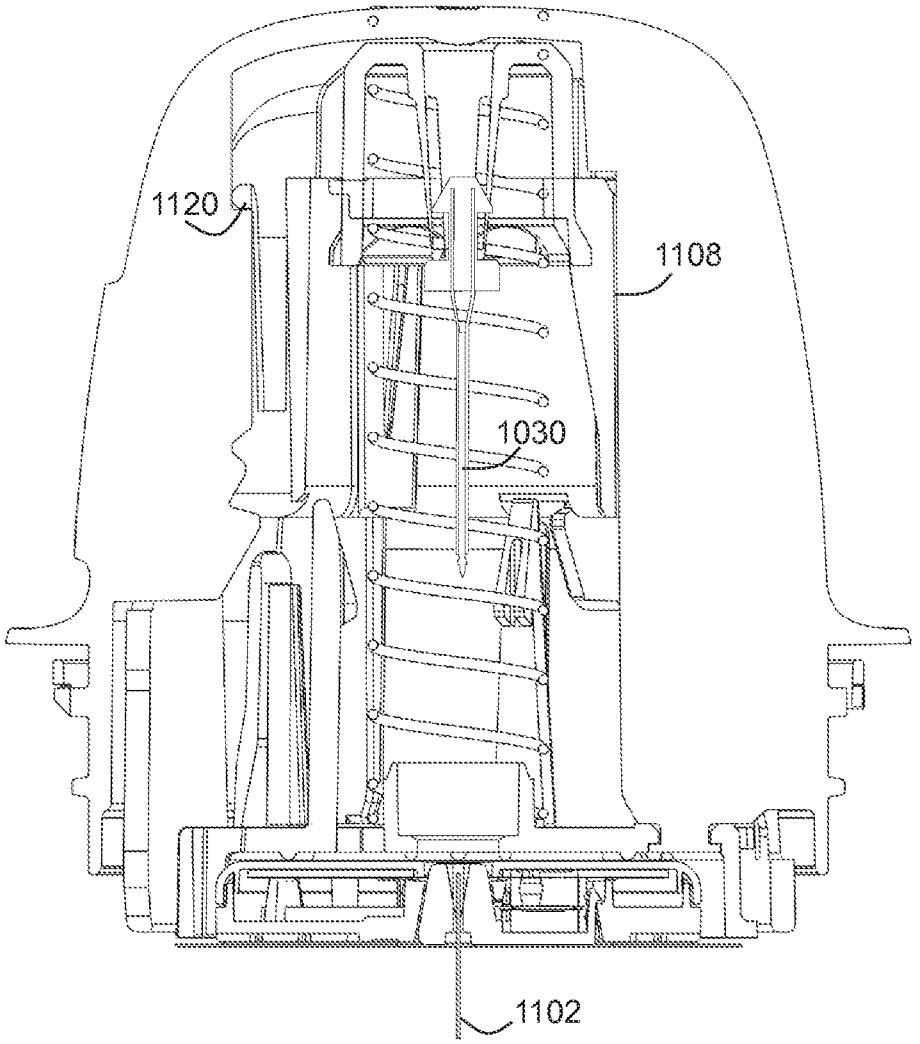

FIG. 11E

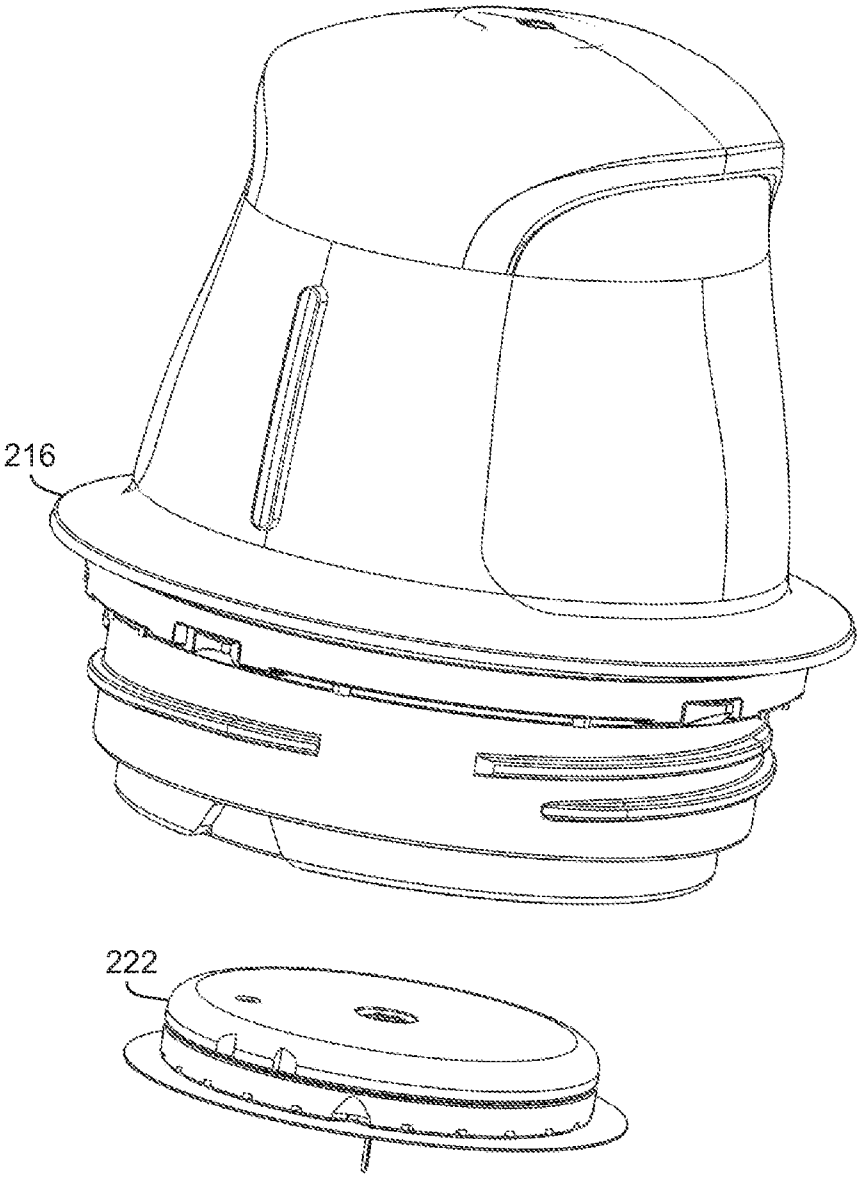

FIG. 11F

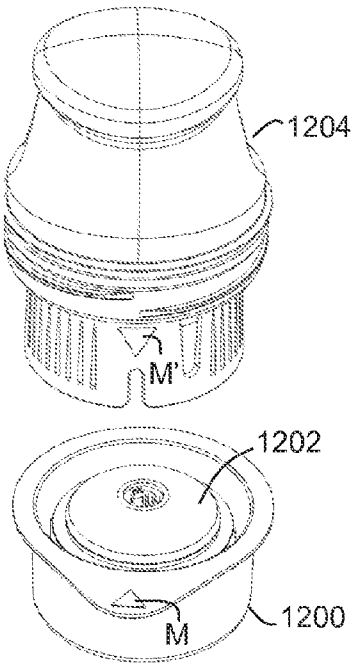

FIG. 12A

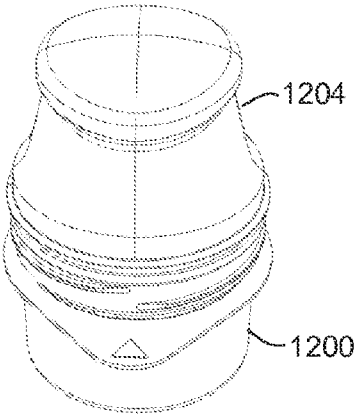

FIG. 12B

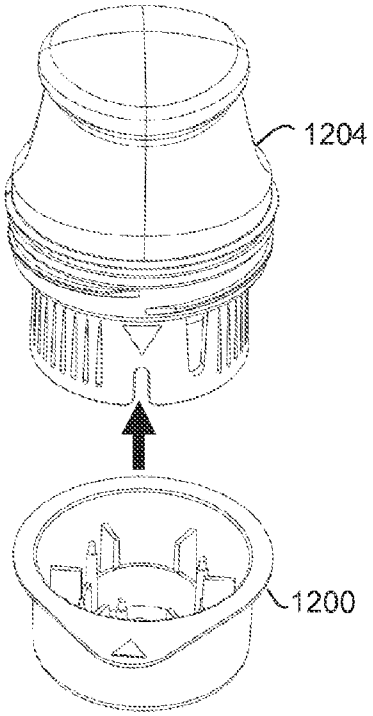

FIG. 12C

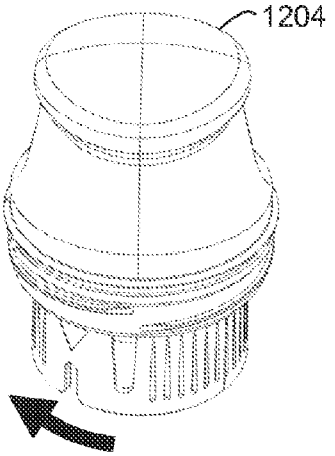

FIG. 12D

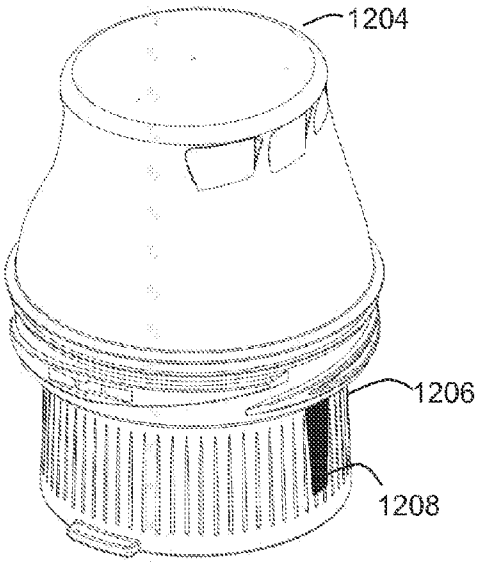

FIG. 13A

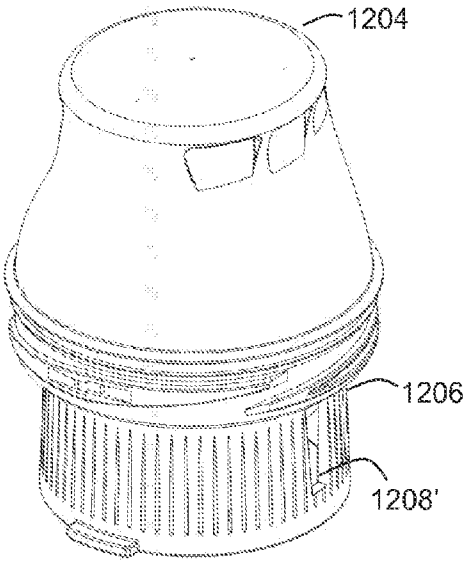

FIG. 13B

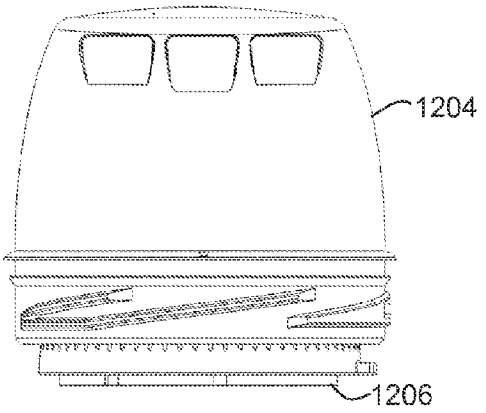

FIG. 13C

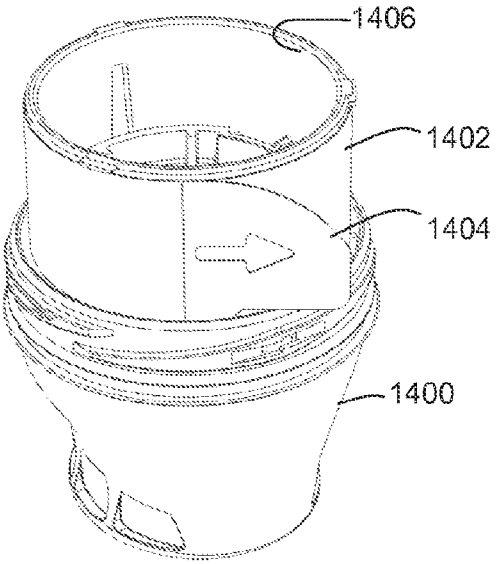

FIG. 14A

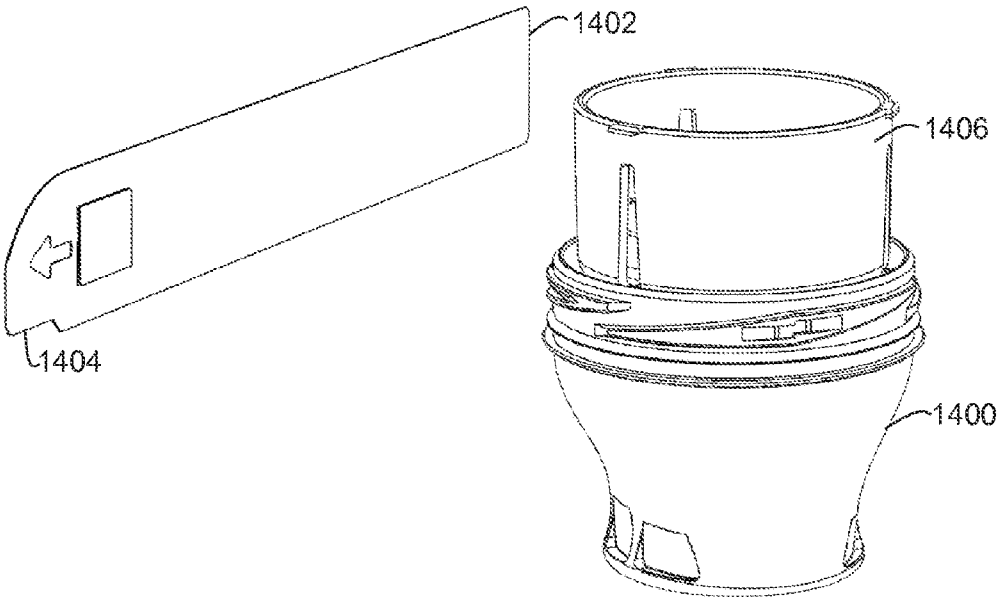

FIG. 14B

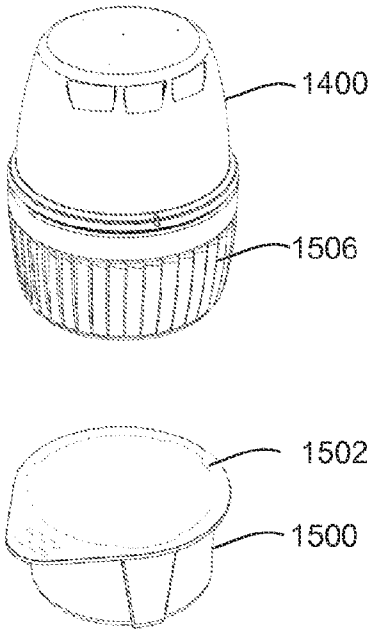

FIG. 15A

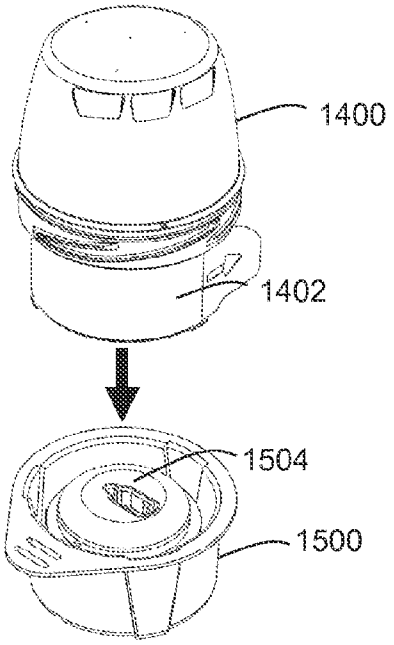

FIG. 15B

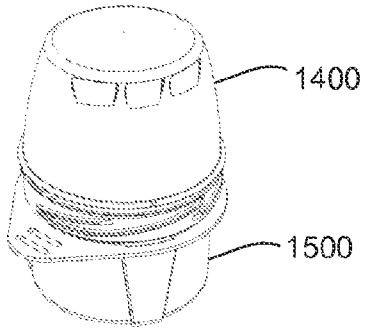

FIG. 15C

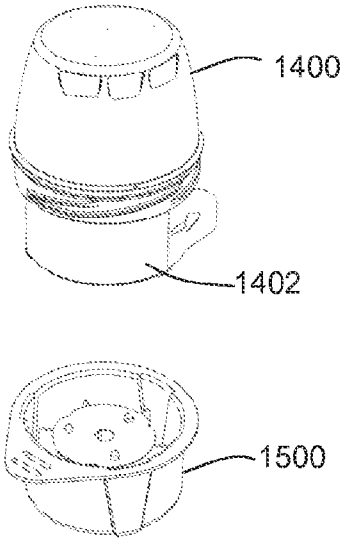

FIG. 15D

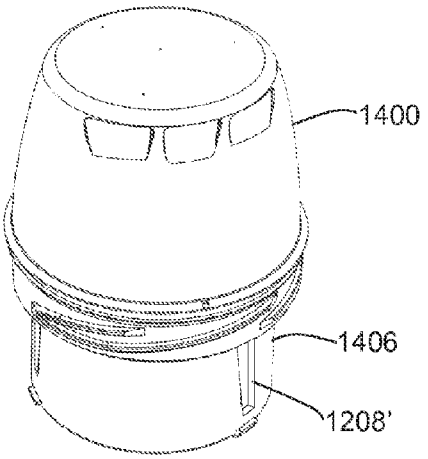

FIG. 15E

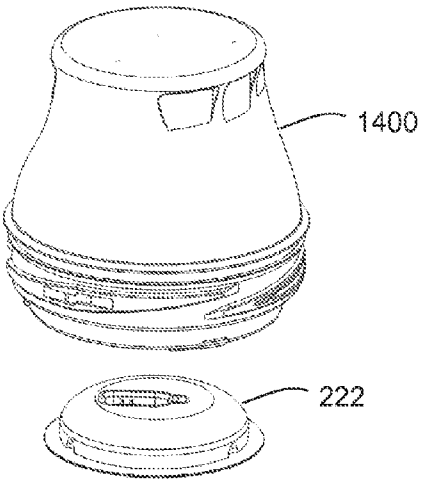

FIG. 15F

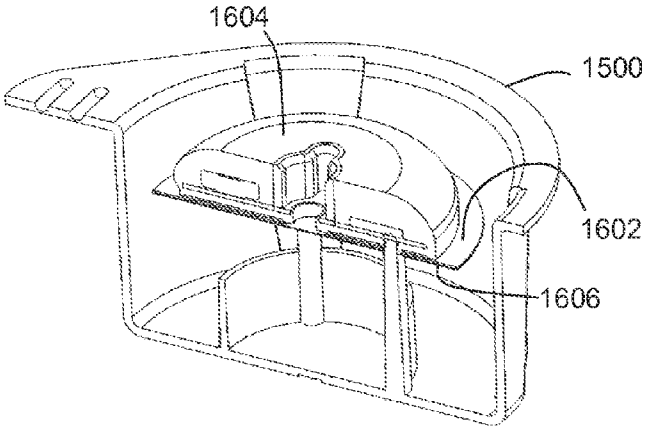

FIG. 16A

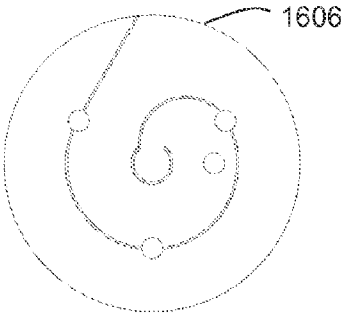

FIG. 16B

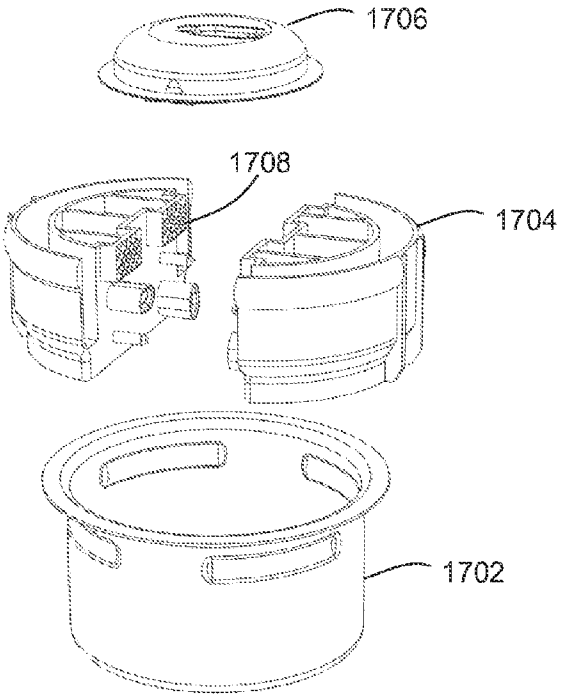

FIG. 17A

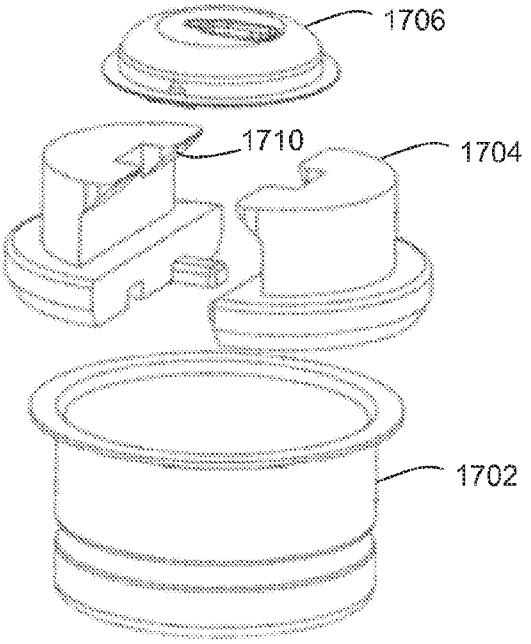

FIG. 17B

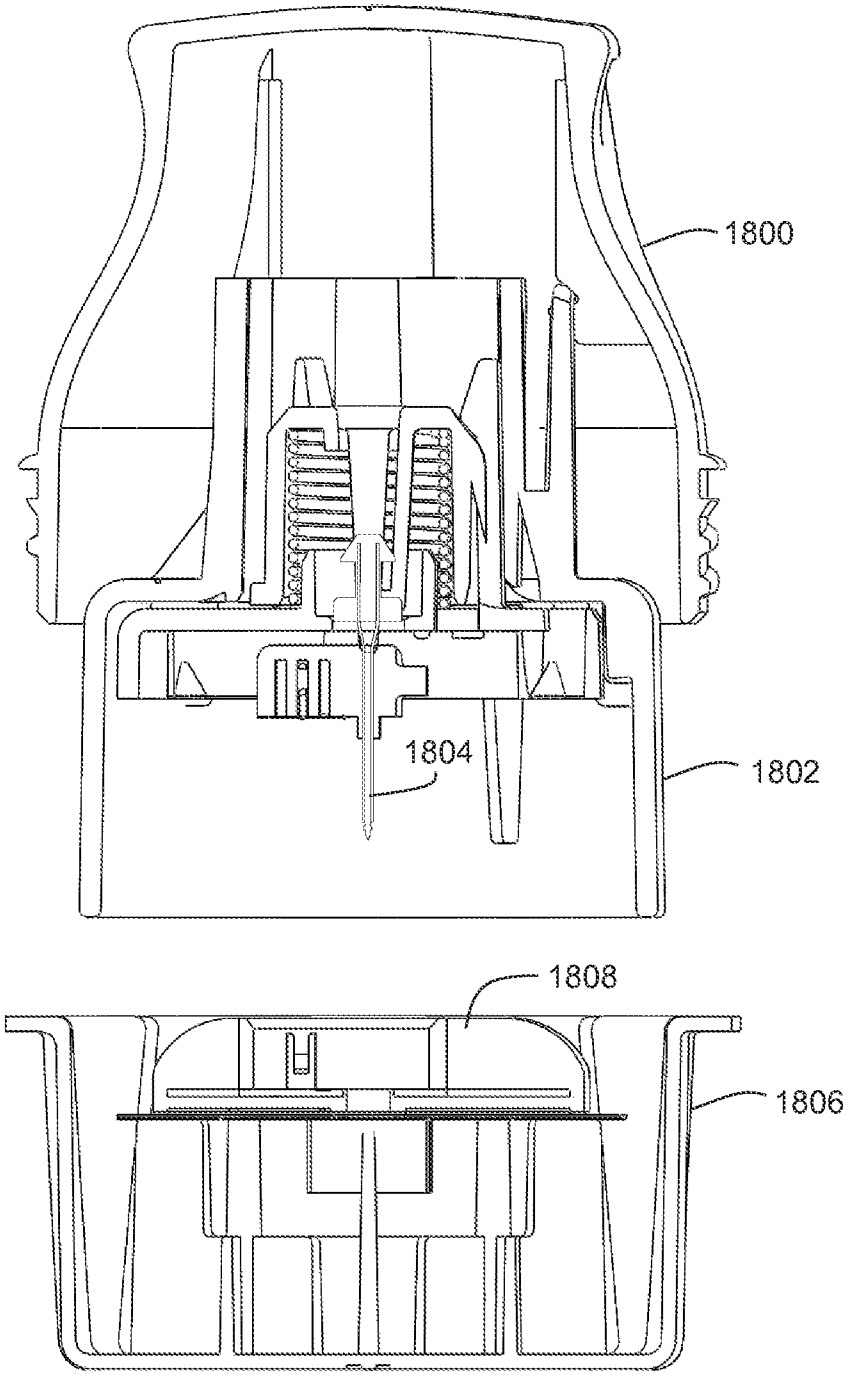

FIG. 18

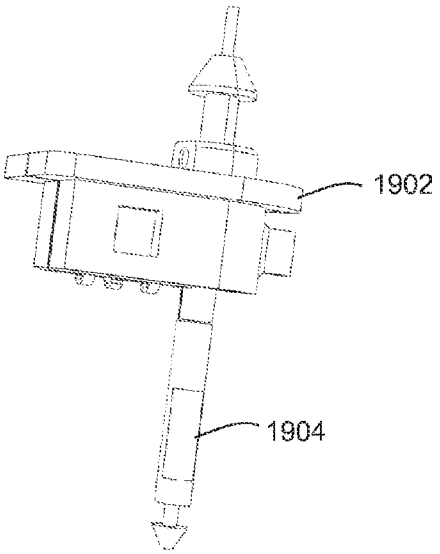

FIG. 19A

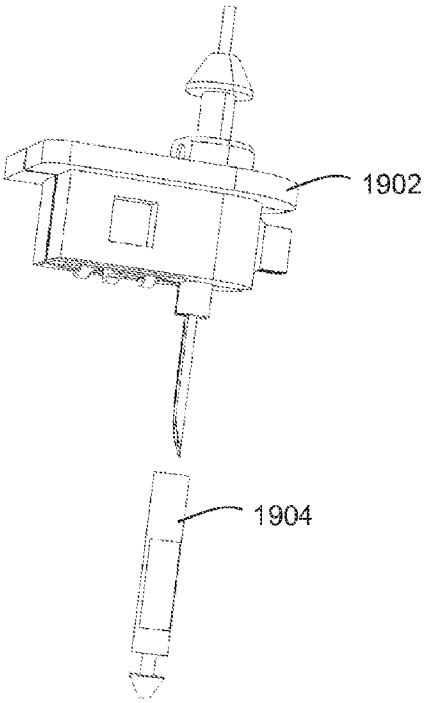

FIG. 19B

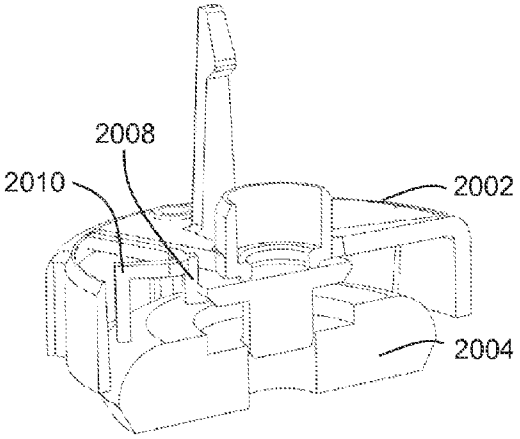

FIG. 20A

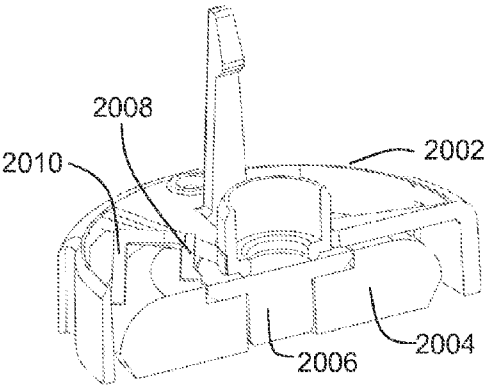

FIG. 20B

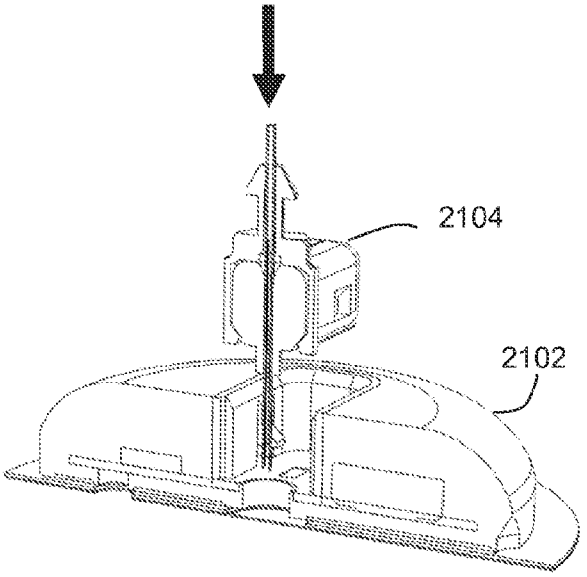

FIG. 21A

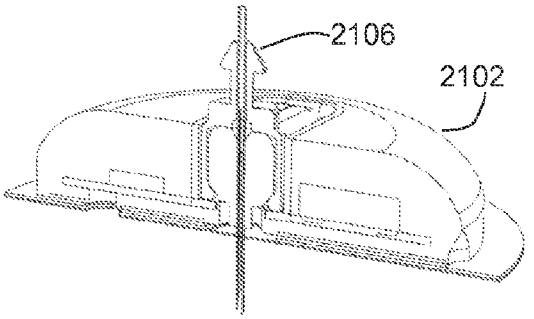

FIG. 21B

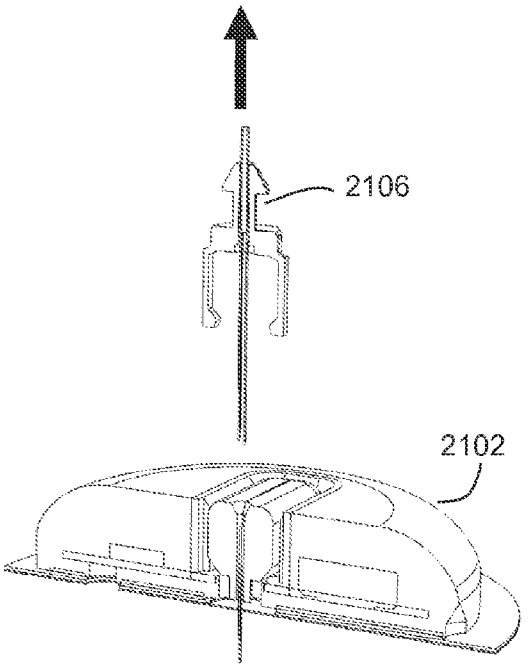

FIG. 21C

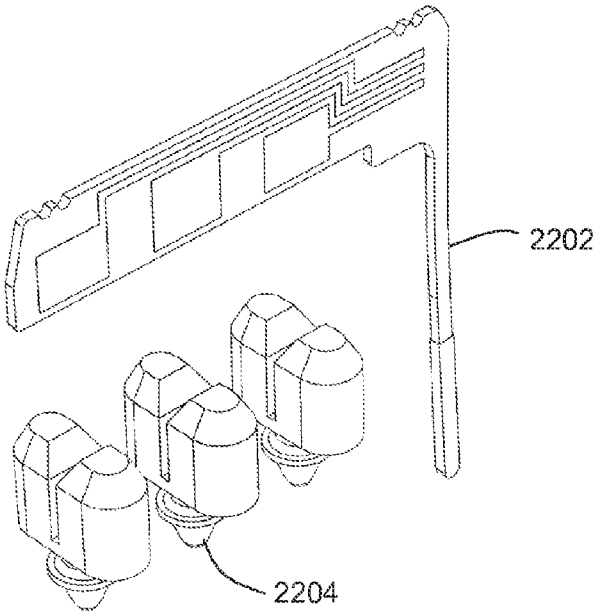

FIG. 22

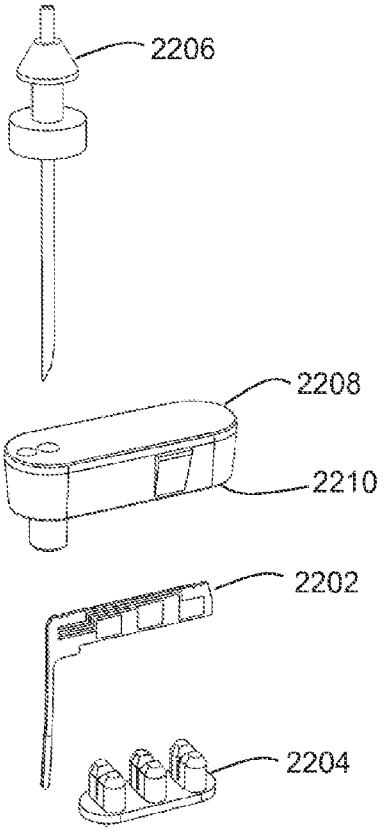

FIG. 23A

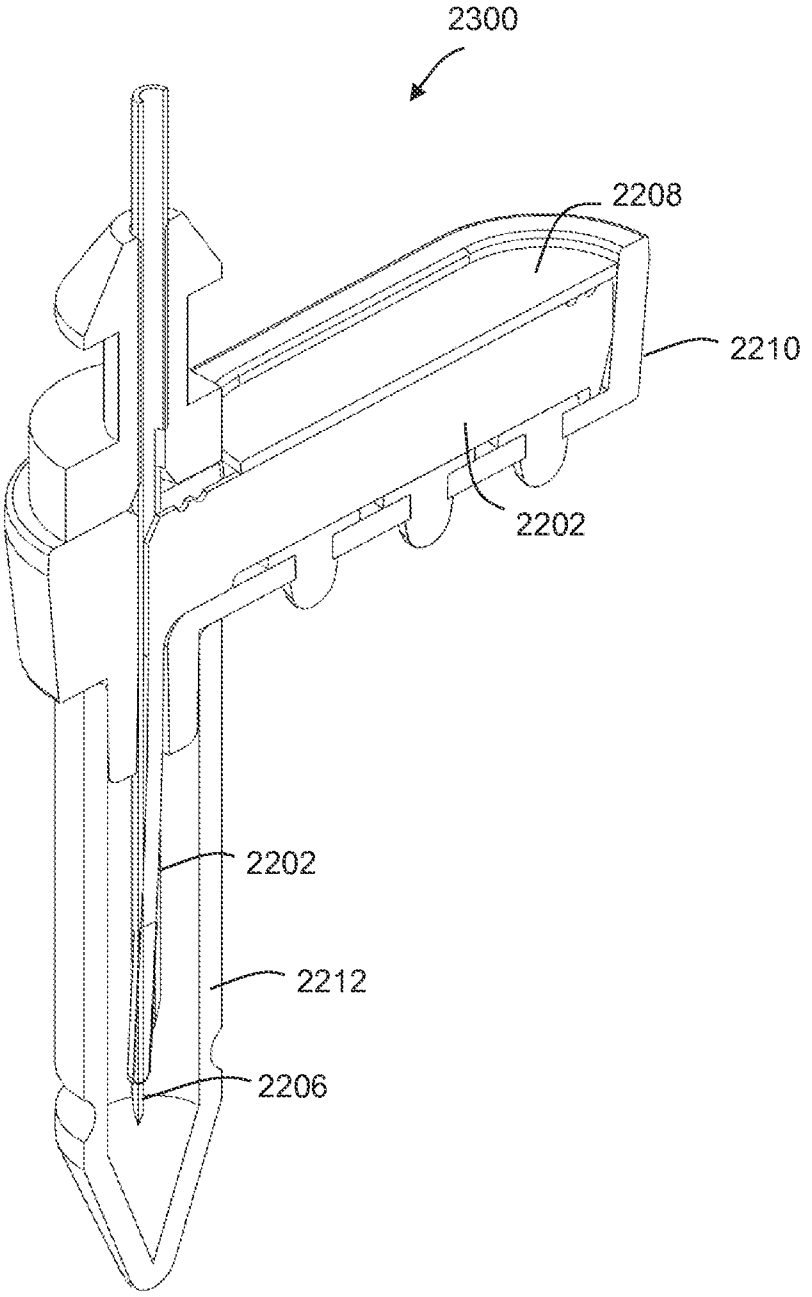

FIG. 23B

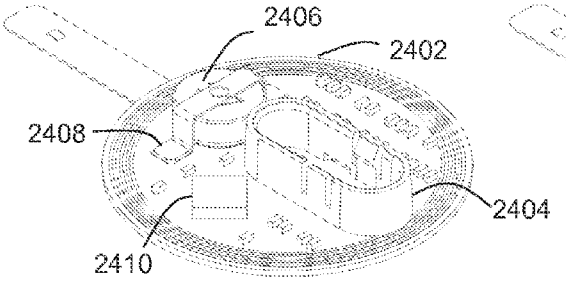

FIG. 24A

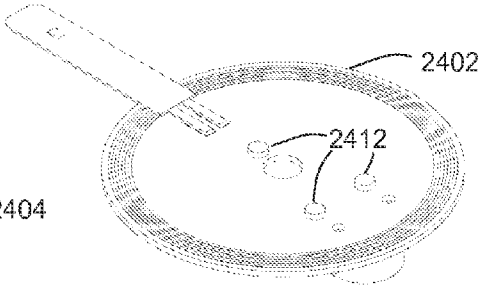

FIG. 24B

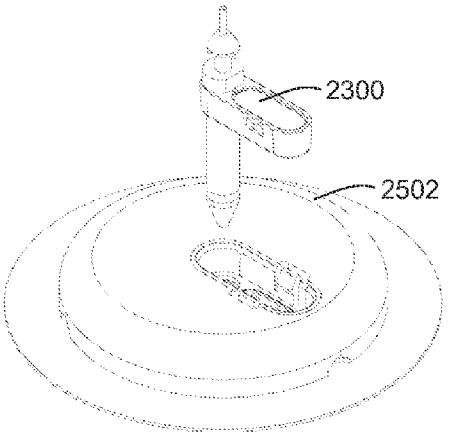

FIG. 25A

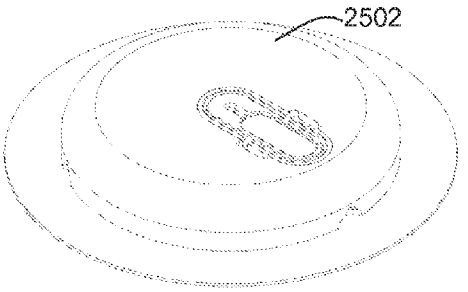

FIG. 25B

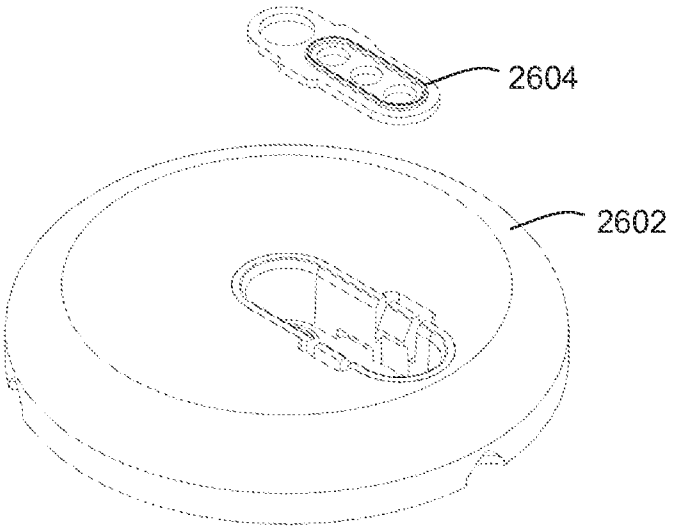

FIG. 26

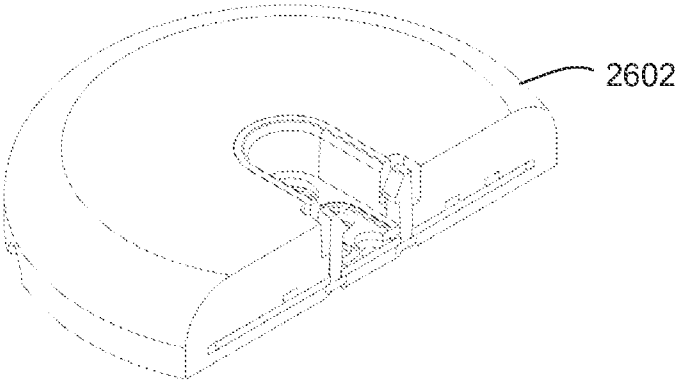

FIG. 27A

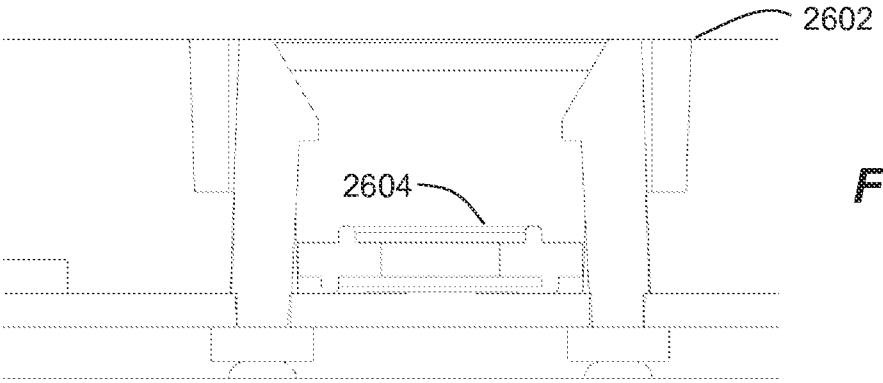

FIG. 27B

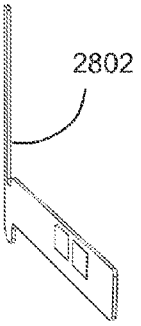

FIG. 28A

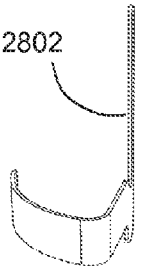

FIG. 28B

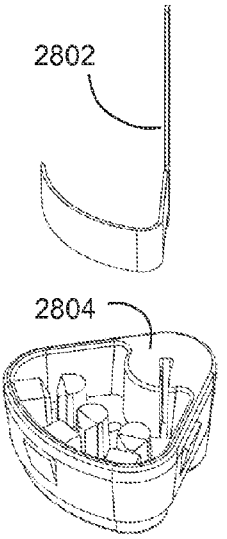

FIG. 28C

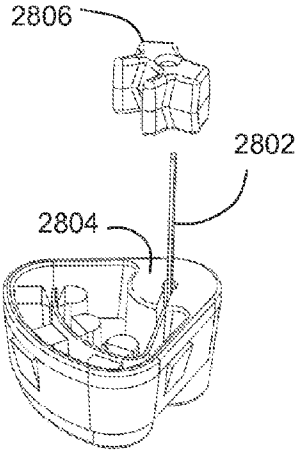

FIG. 28D

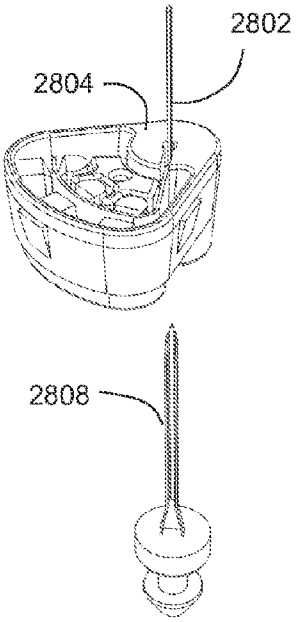

FIG. 28E

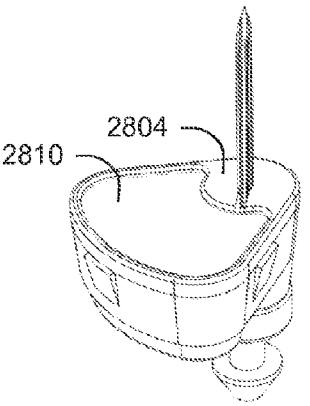

FIG. 28F

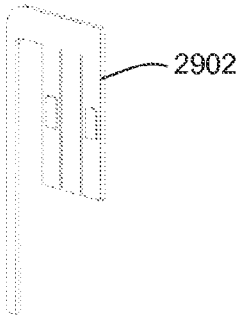

FIG. 29A

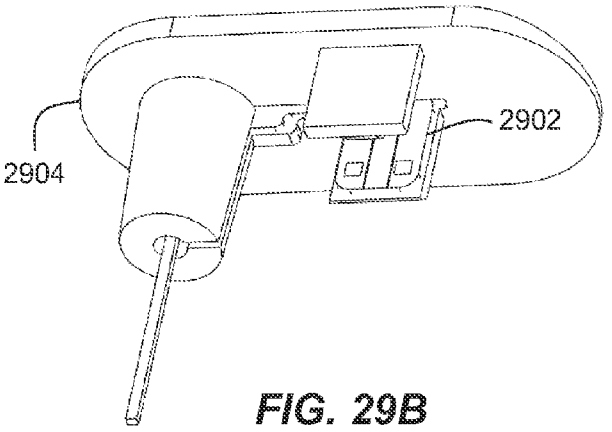

FIG. 29B

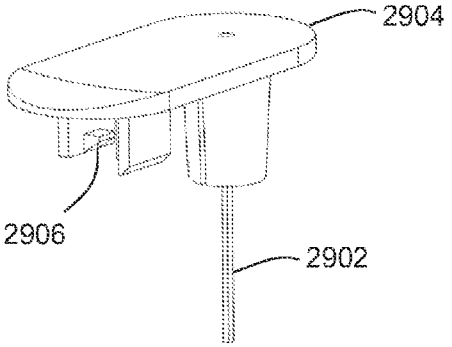

FIG. 29C

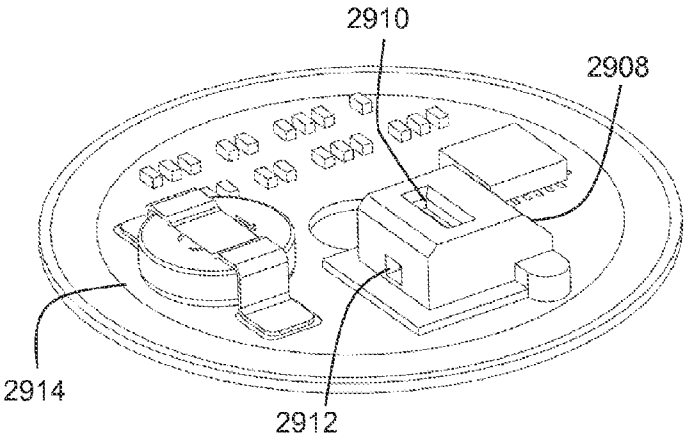

FIG. 29D

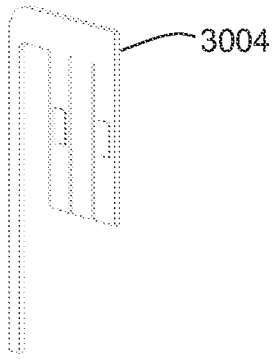

FIG. 30A

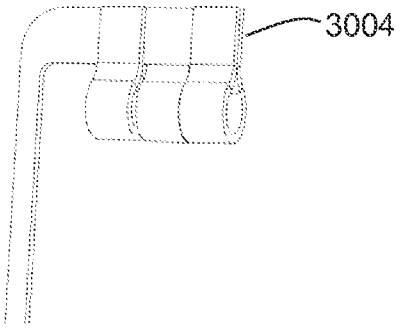

FIG. 30B

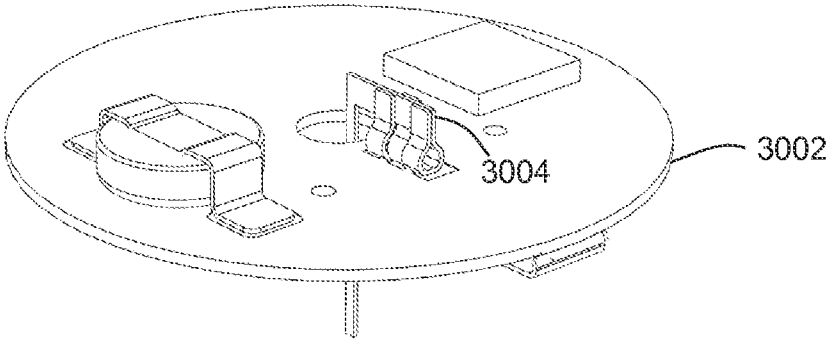

FIG. 30C

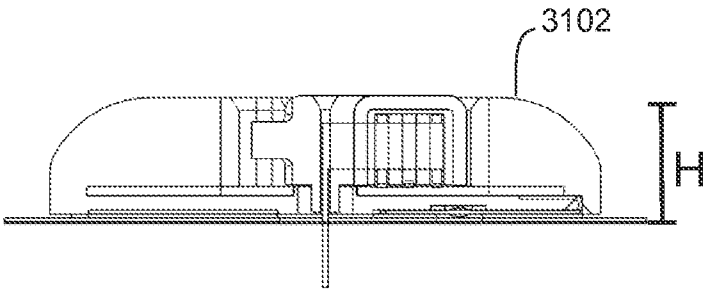

FIG. 31

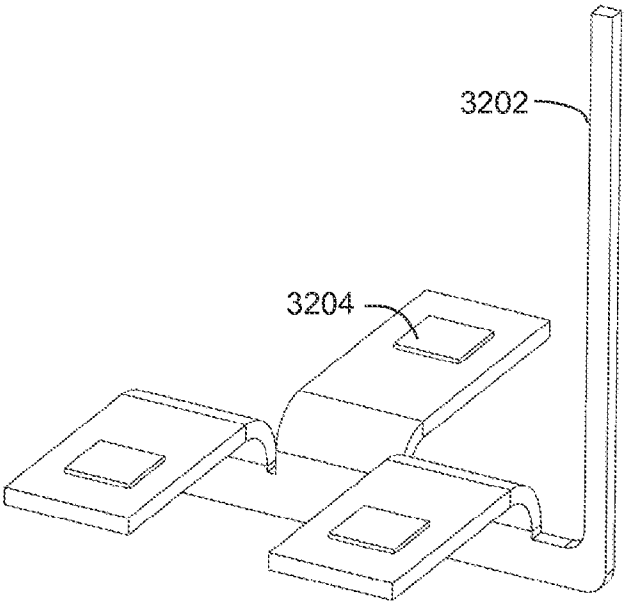

FIG. 32A

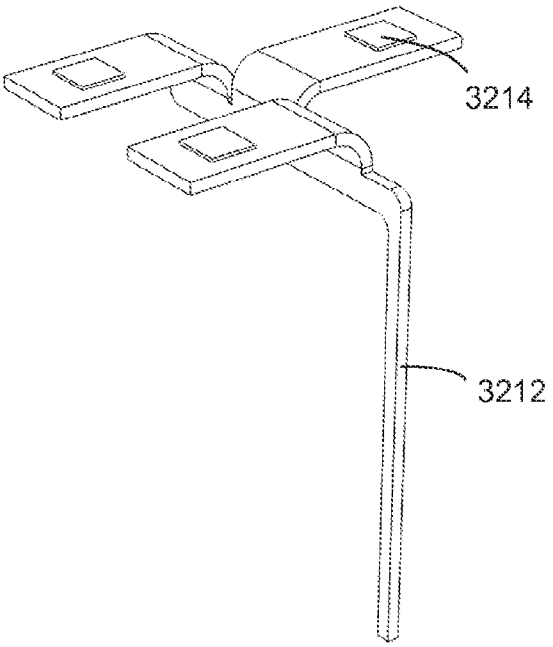

FIG. 32B

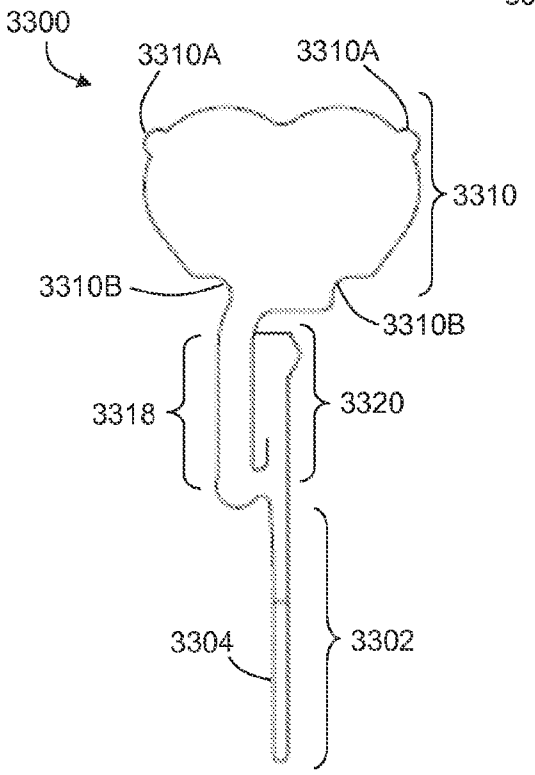

FIG. 33A

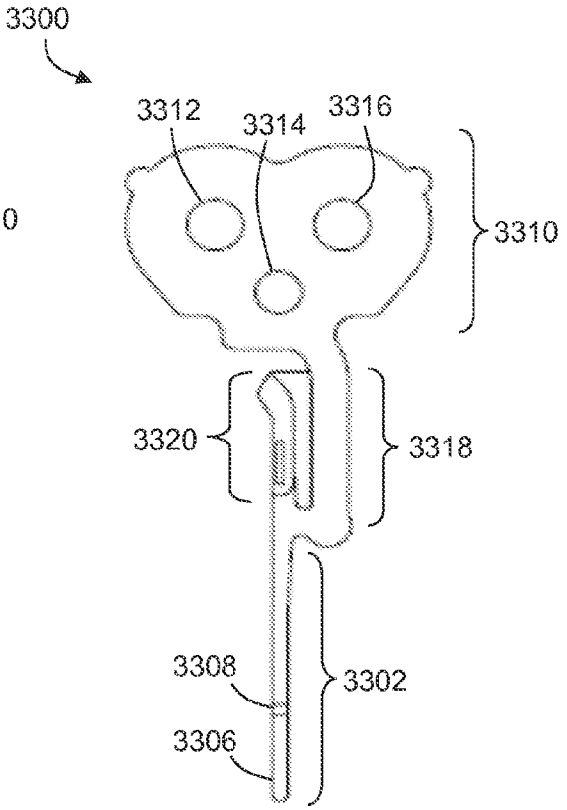

FIG. 33B

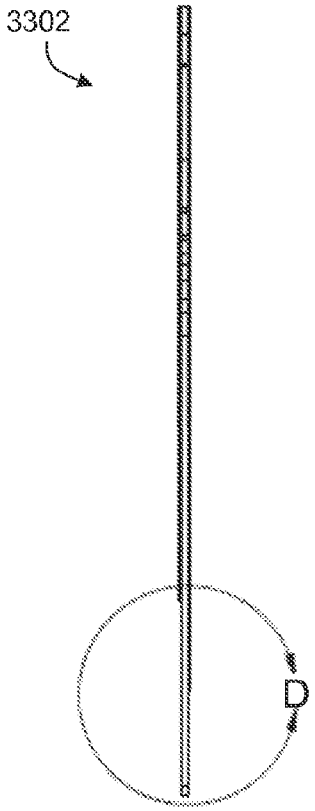

FIG. 33C

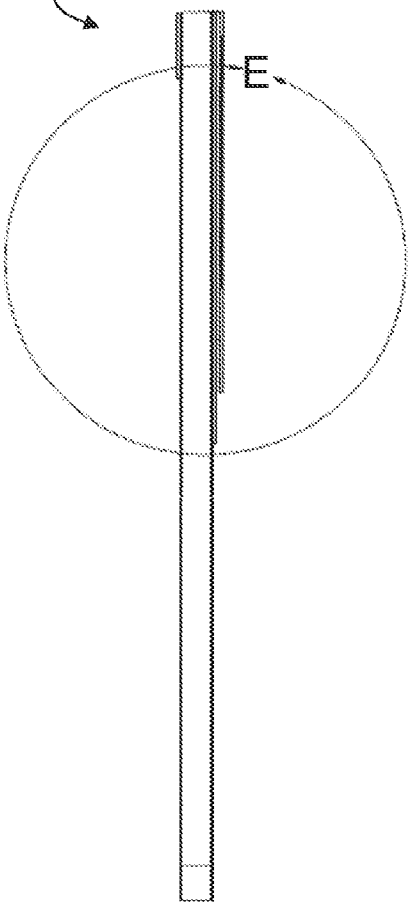

FIG. 33D

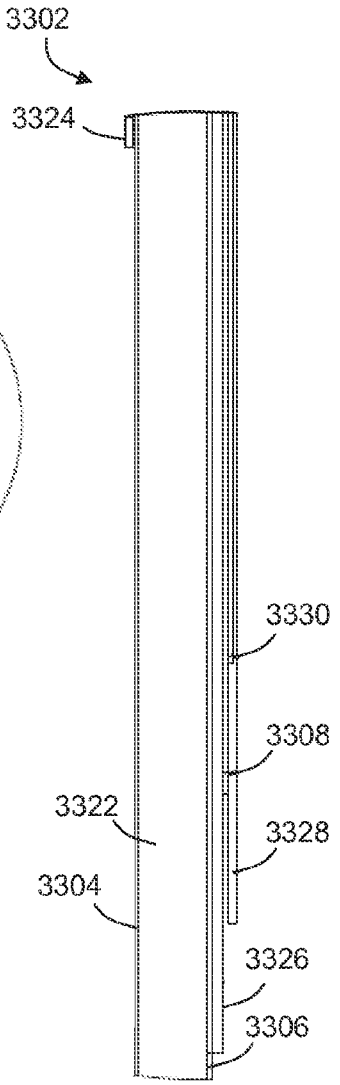

FIG. 33E

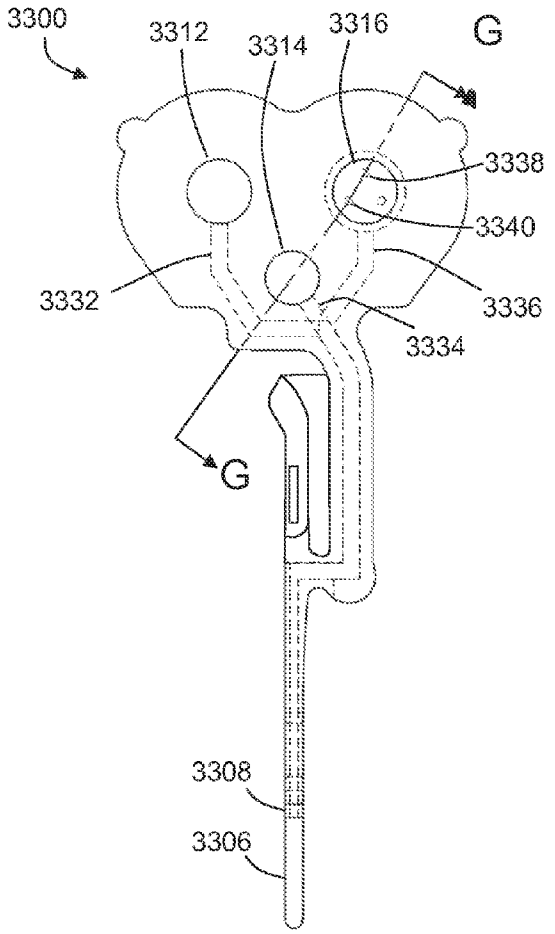

FIG. 33F

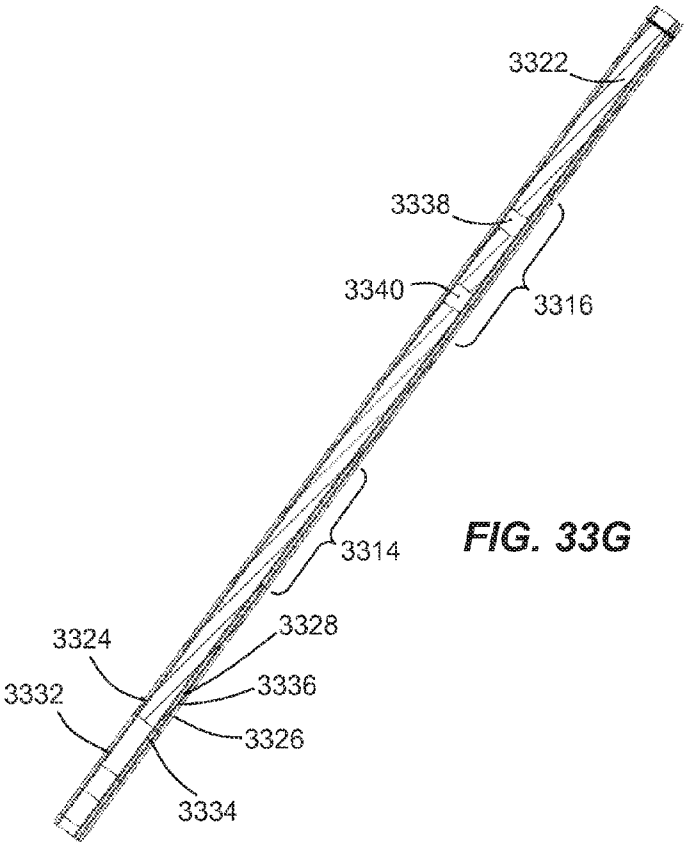

FIG. 33G

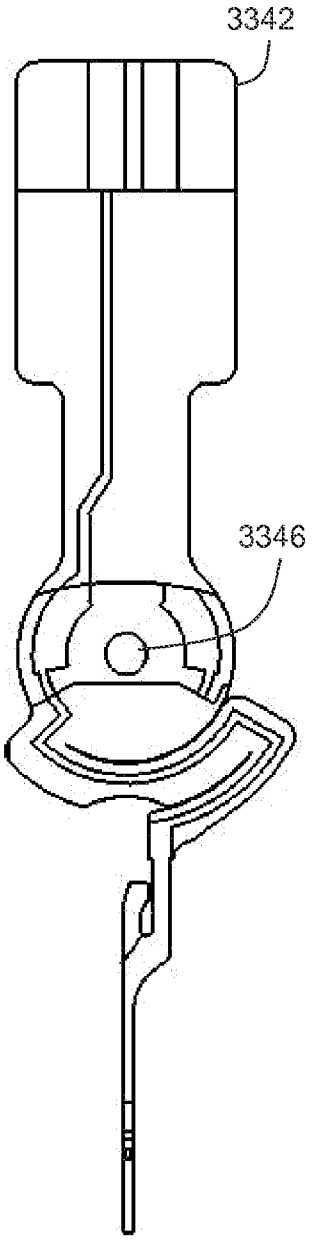

FIG. 33H

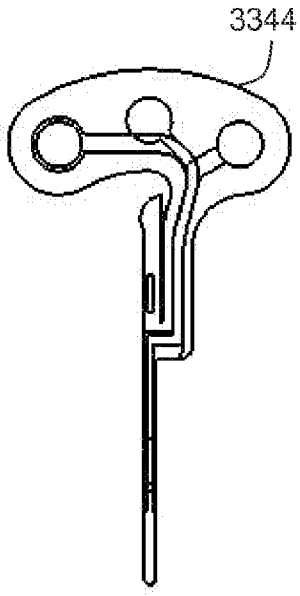

FIG. 33I

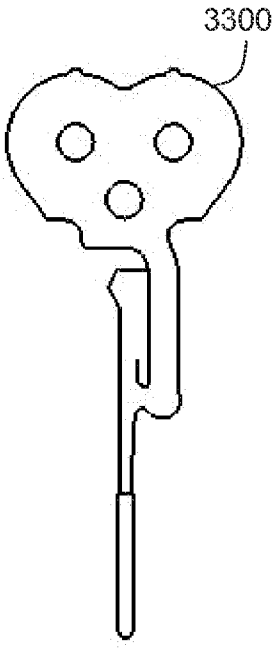

FIG. 33J

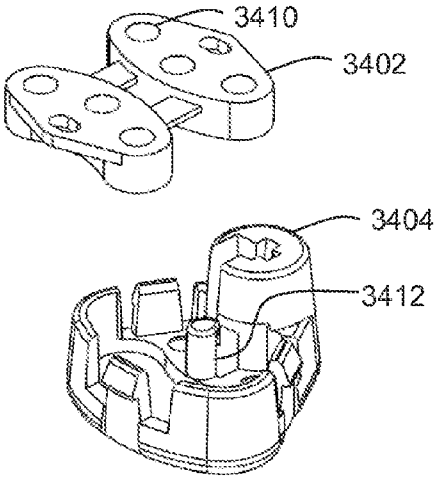

FIG. 34A

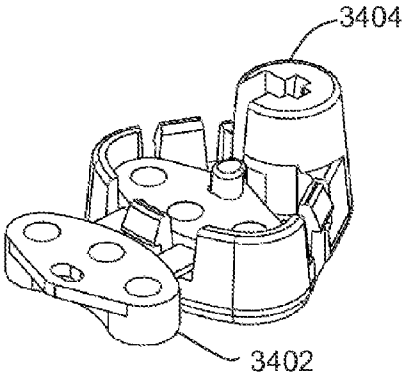

FIG. 34B

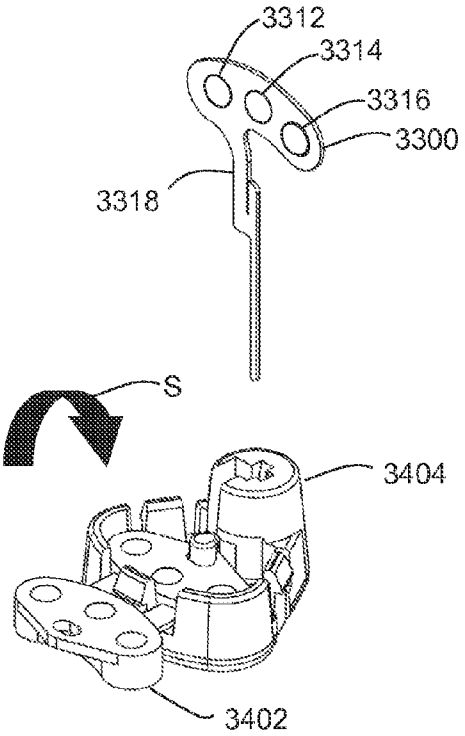

FIG. 34C

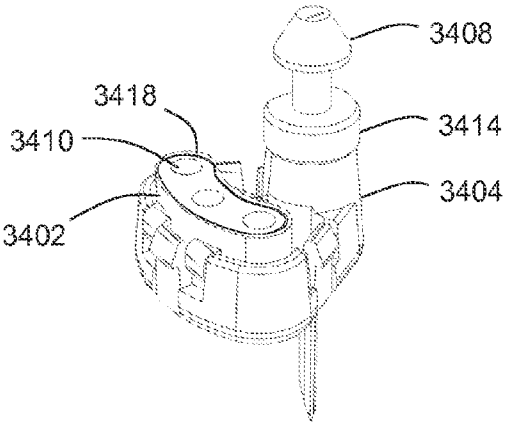

FIG. 34D

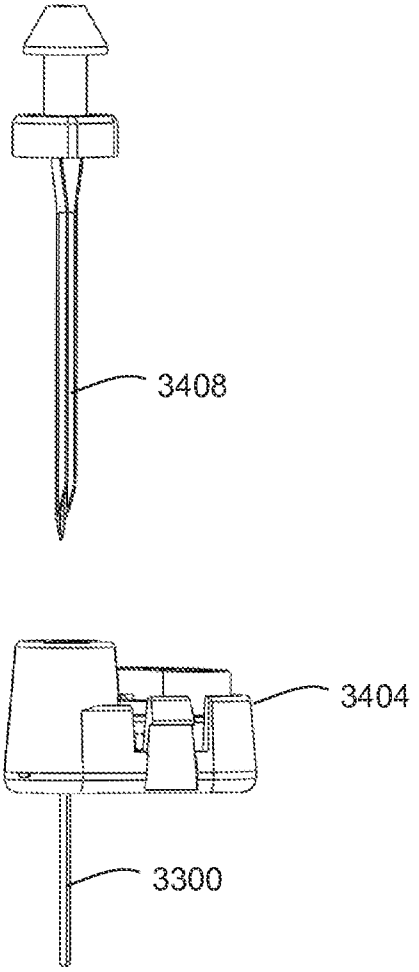

FIG. 35A

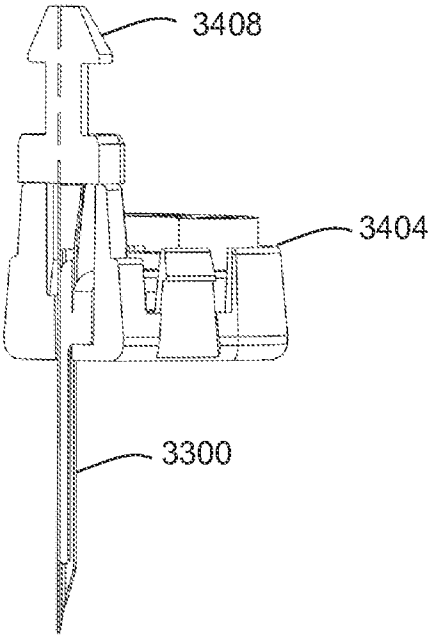

FIG. 35B

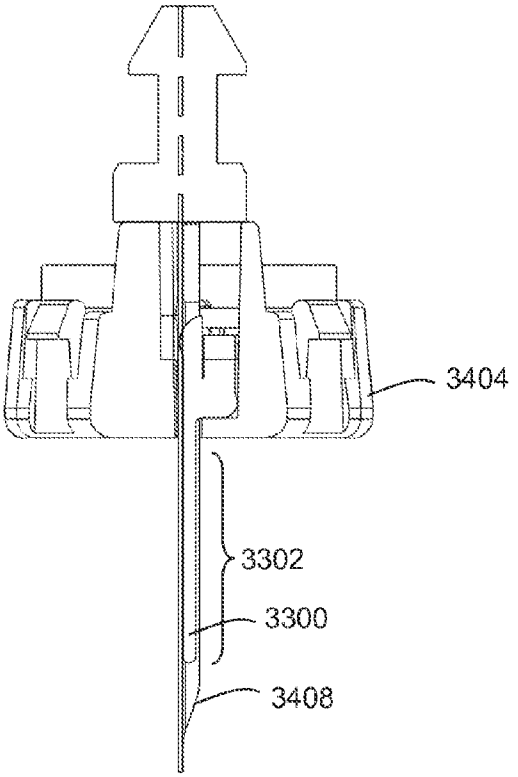

FIG. 35C

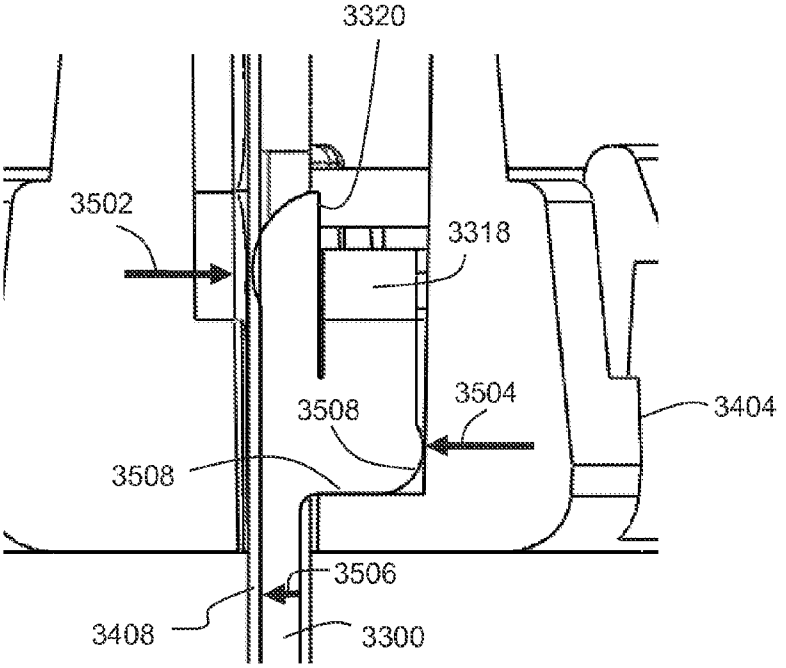

FIG. 35D

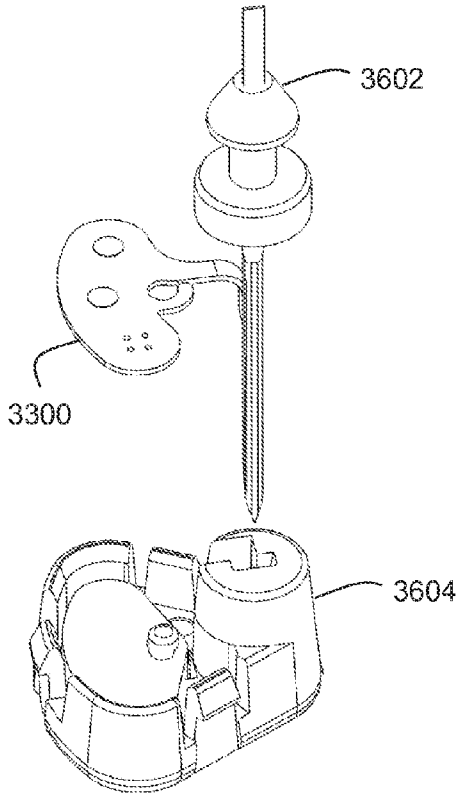

FIG. 36

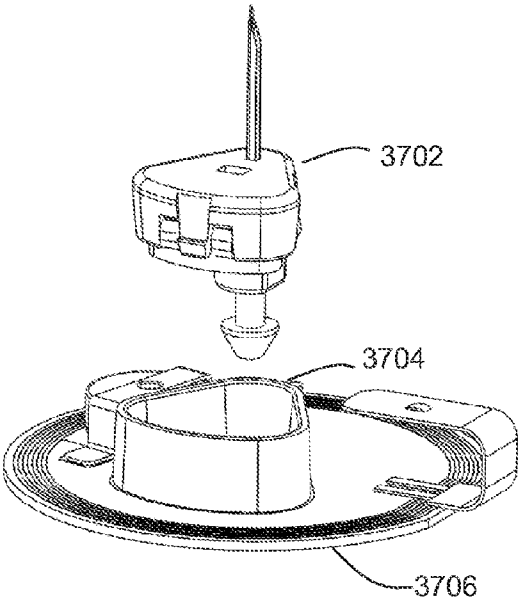

FIG. 37

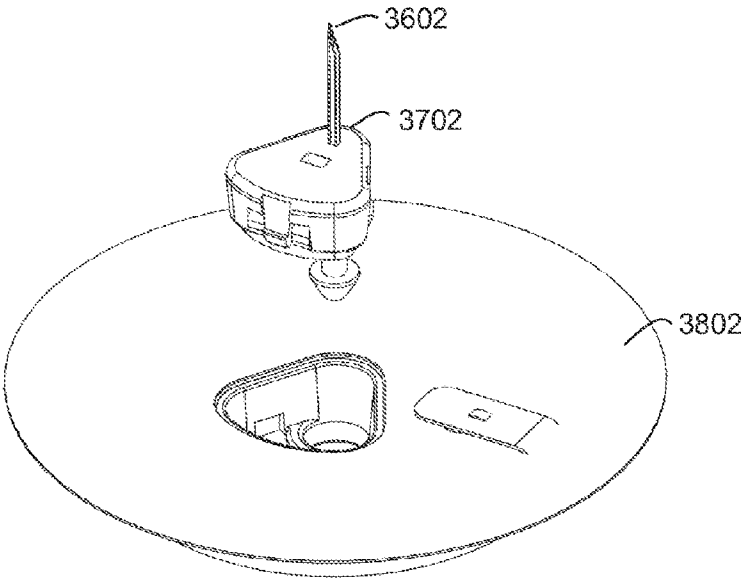

FIG. 38

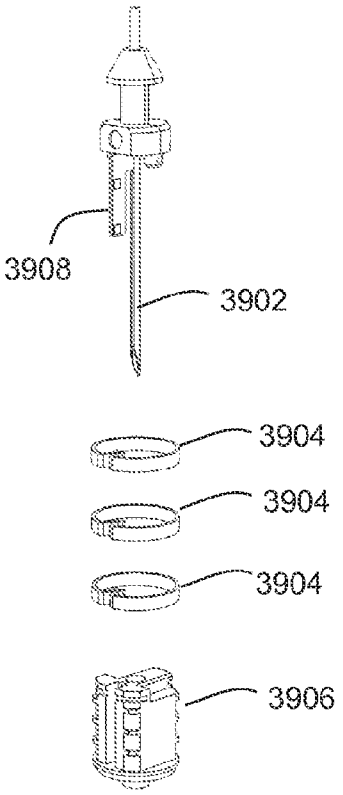

FIG. 39A

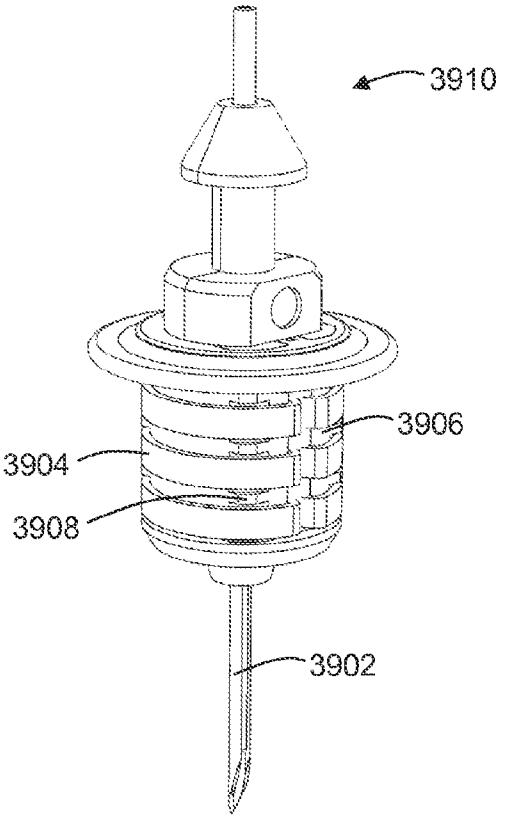

FIG. 39B

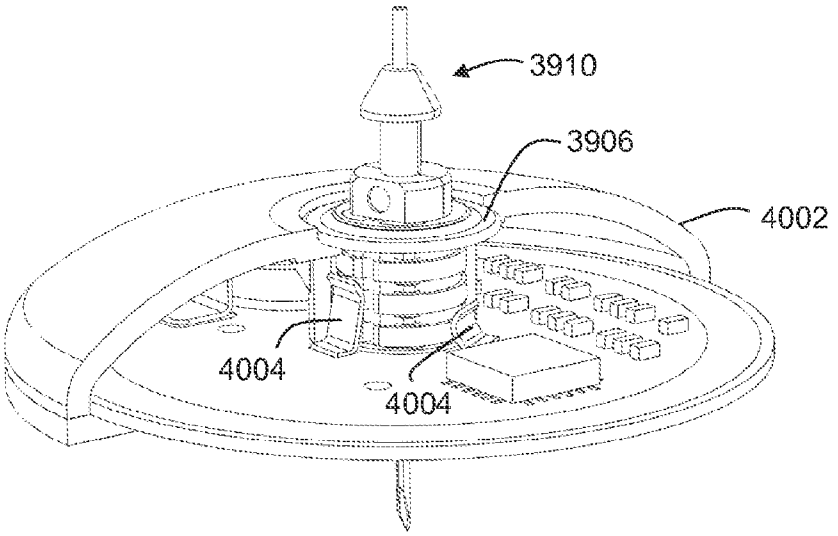

FIG. 40

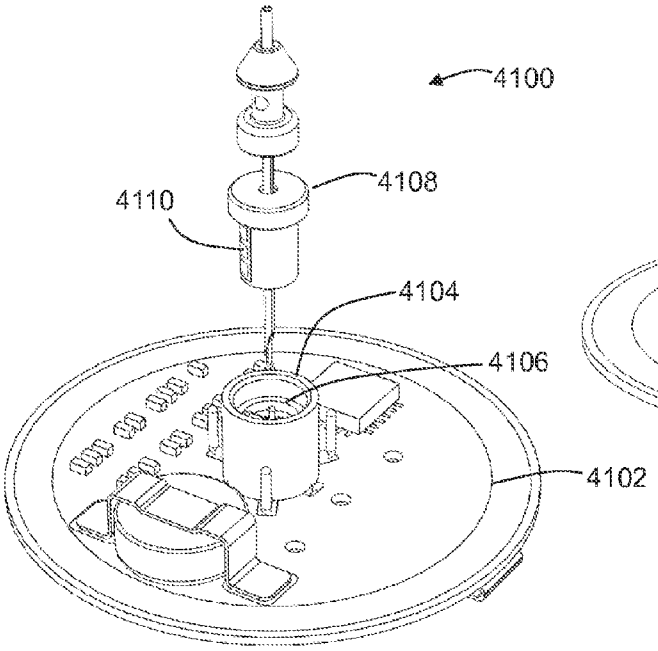

FIG. 41A

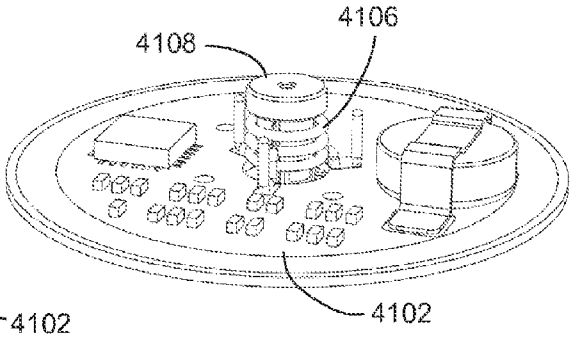

FIG. 41B

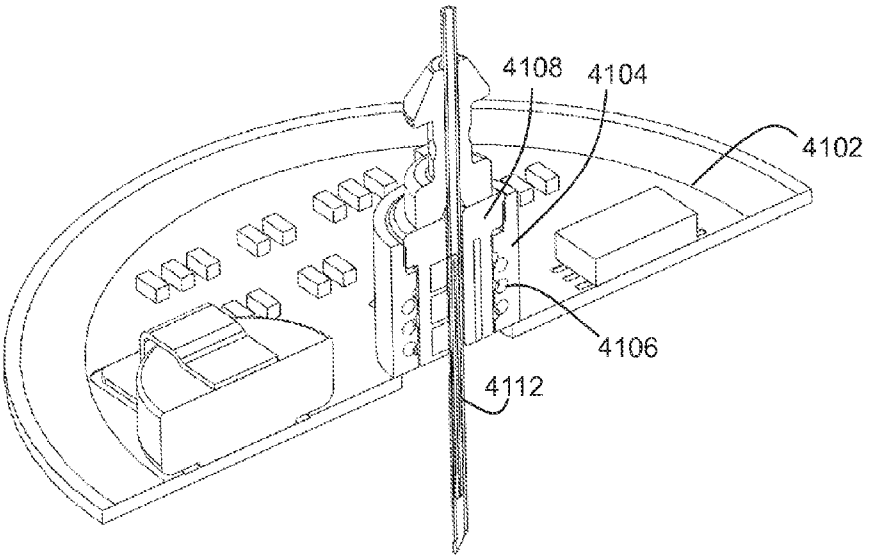

FIG. 41C

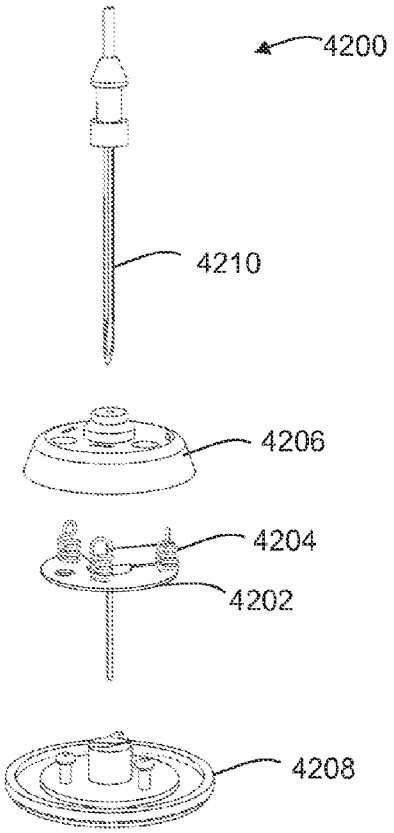

FIG. 42

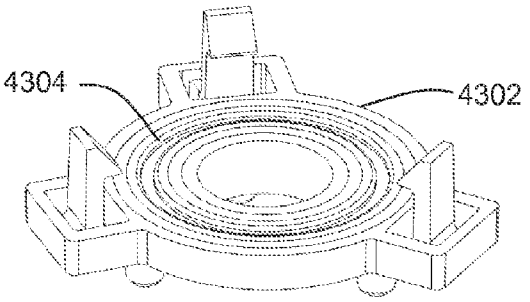

FIG. 43A

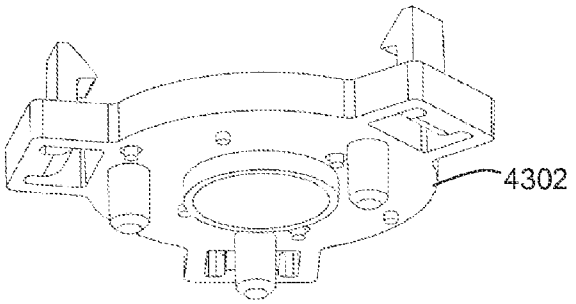

FIG. 43B

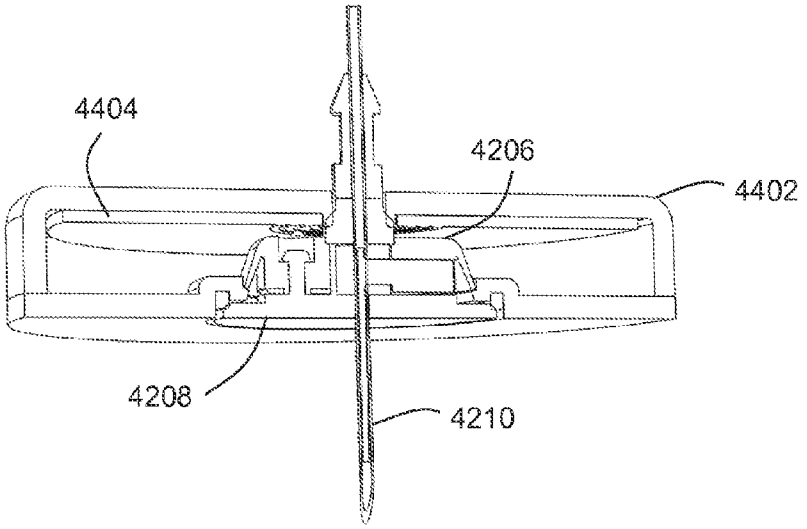

FIG. 44

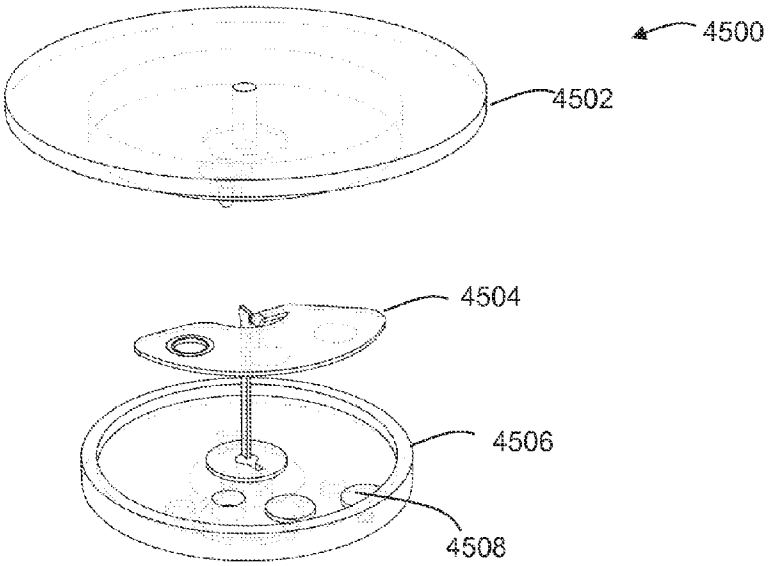

FIG. 45A

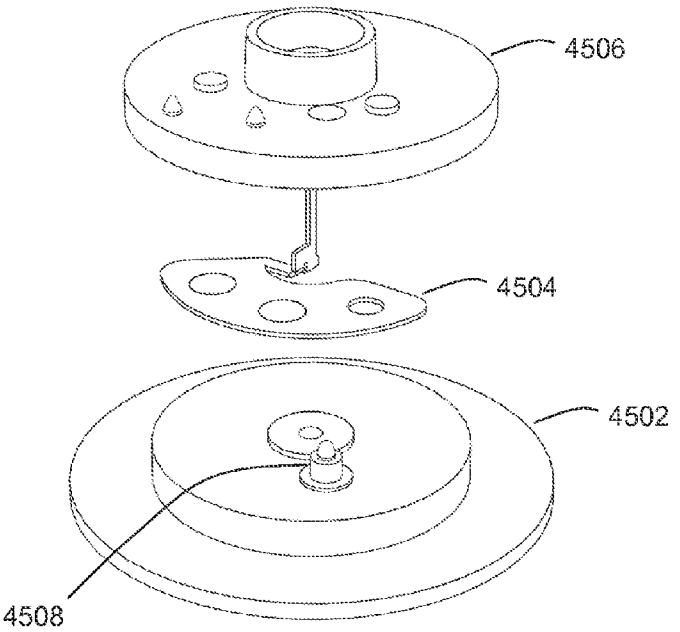

FIG. 45B

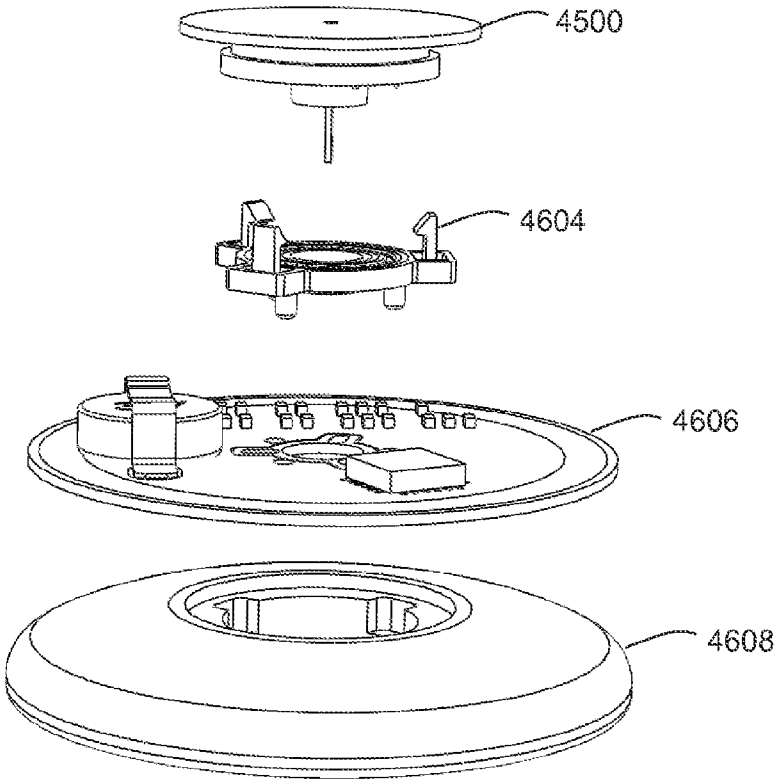

FIG. 46A

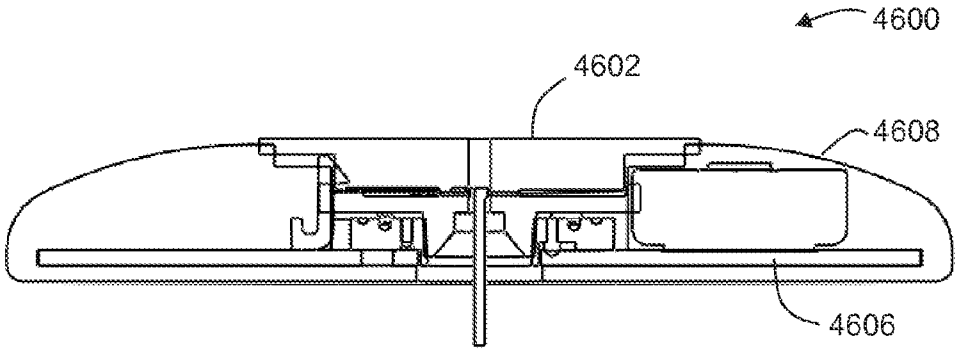

FIG. 46B

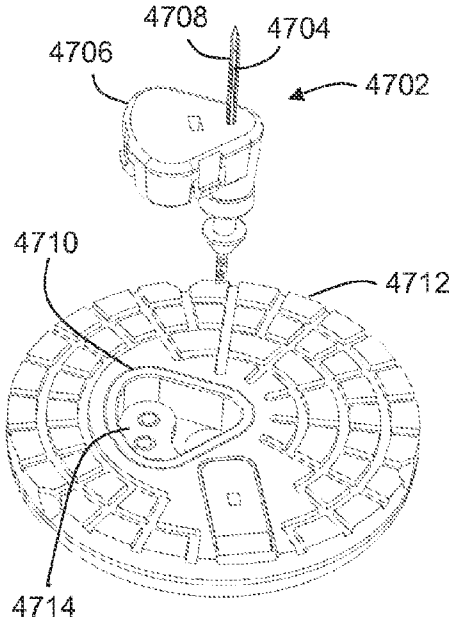

FIG. 47A

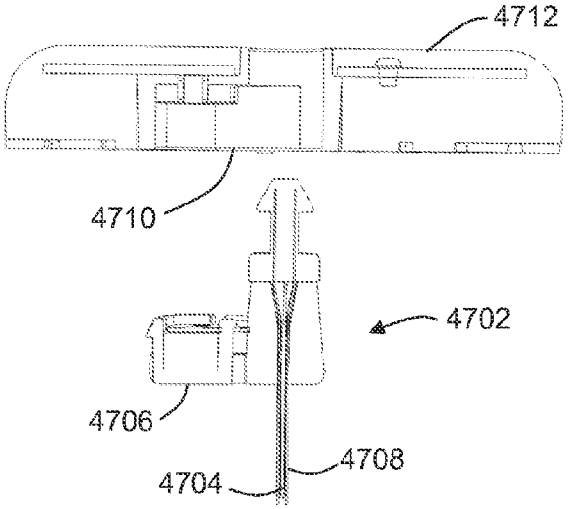

FIG. 47B

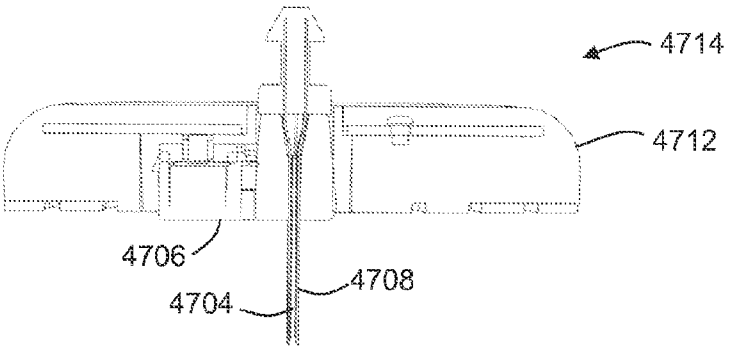

FIG. 47C

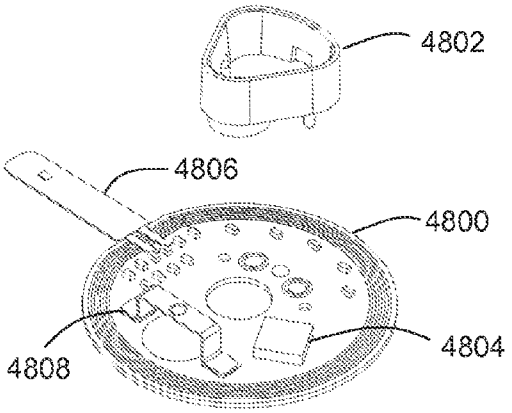

FIG. 48A

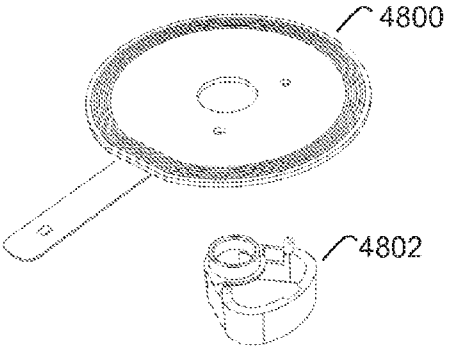

FIG. 48B

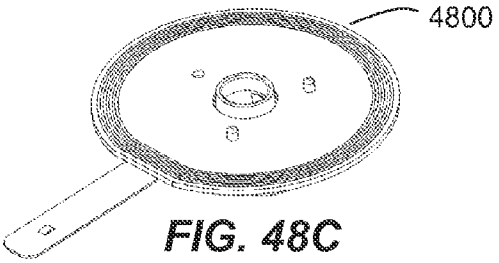

FIG. 48C

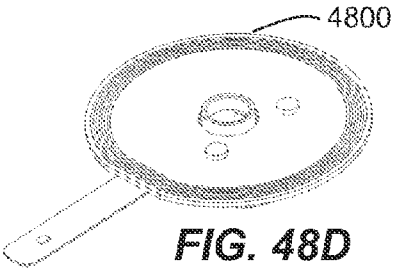

FIG. 48D

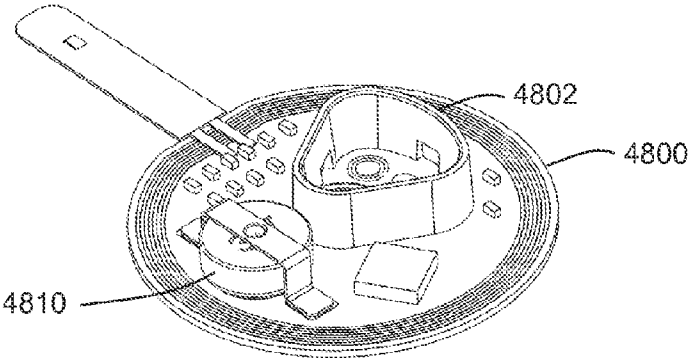

FIG. 48E

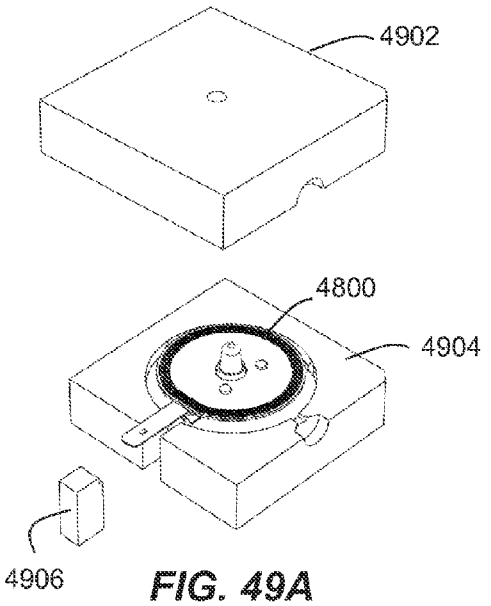

FIG. 49A

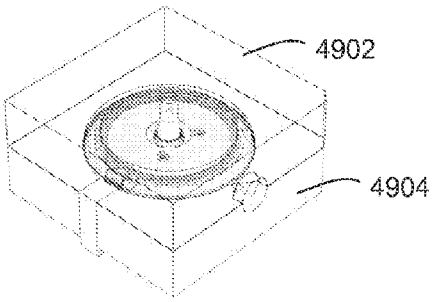

FIG. 49B

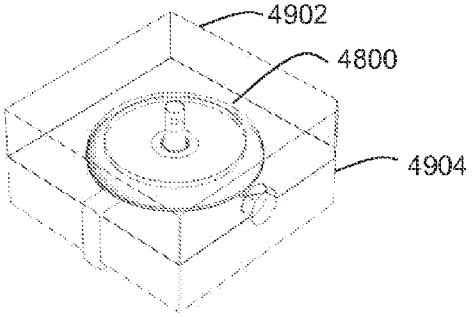

FIG. 49C

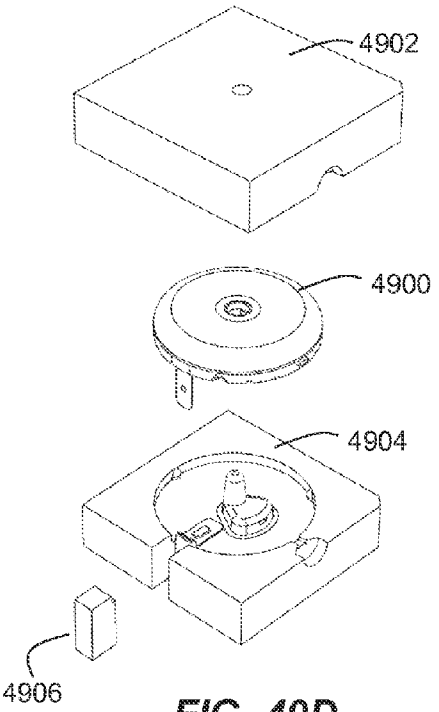

FIG. 49D

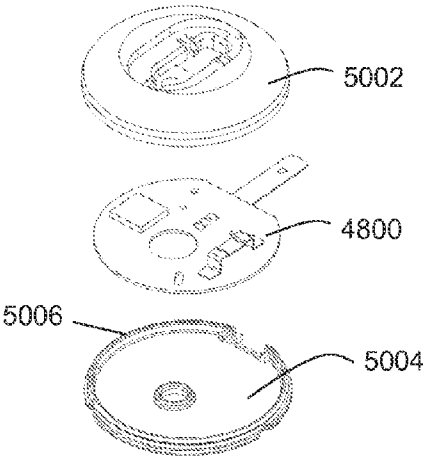

FIG. 50A

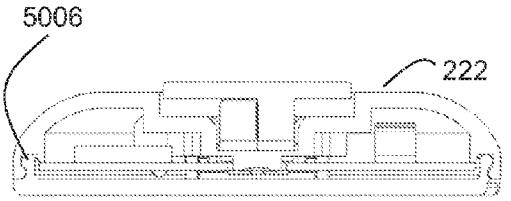

FIG. 50B

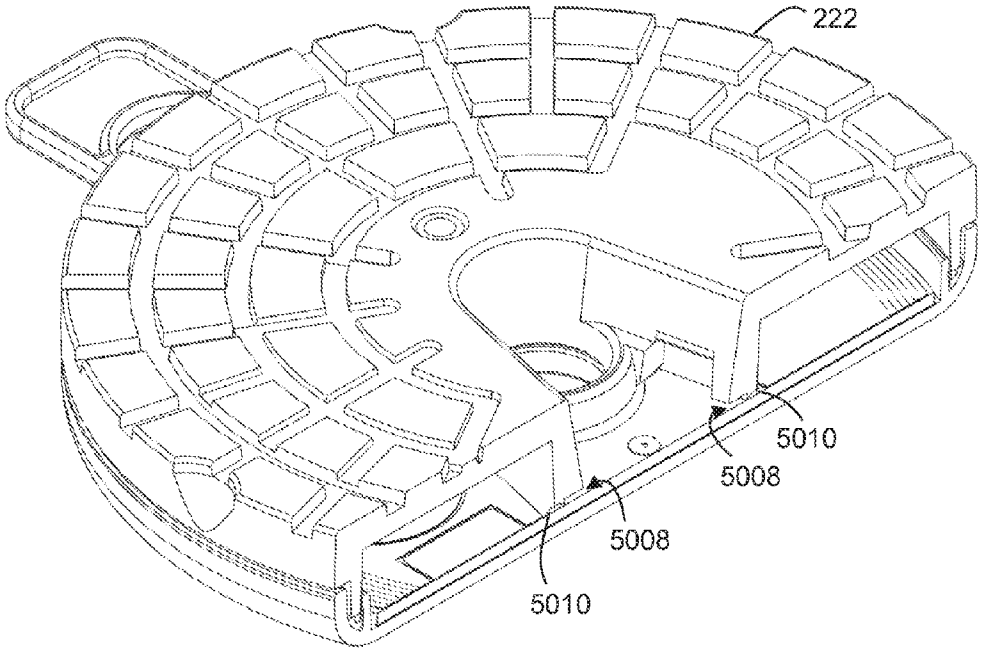

FIG. 50C

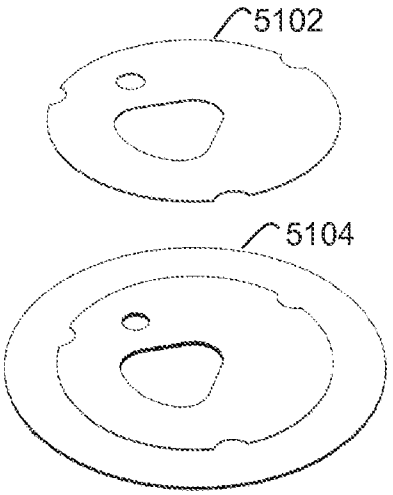

FIG. 51A

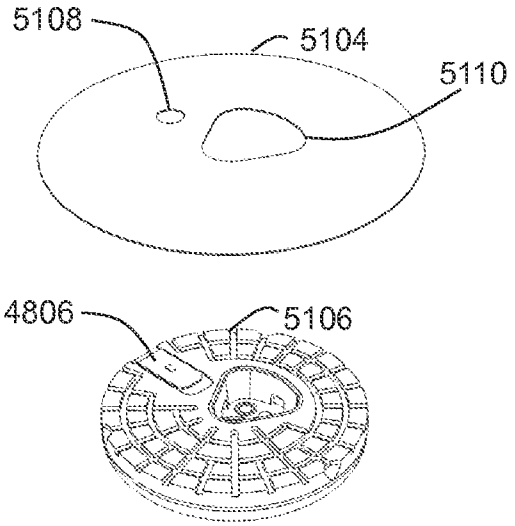

FIG. 51B

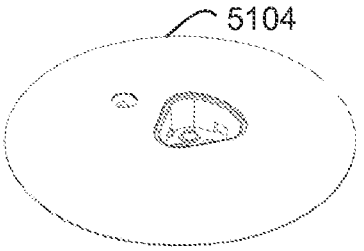

FIG. 51C

ANALYTE SENSOR DEVICES, CONNECTIONS, AND METHODS

CROSS-REFERENCE TO RELATED APPLICATION

[0001] The present application claims priority to US Provisional Patent Application Ser. No. 61/569,287, filed on Dec. 11, 2011, entitled "Analyte Sensor Devices, Connections, And Methods," the entirety of which is incorporated herein by reference.

BACKGROUND

[0002] Diabetes Mellitus is an incurable chronic disease in which the body does not produce or properly utilize insulin. Insulin is a hormone produced by the pancreas that regulates blood sugar (glucose). In particular, when blood sugar levels rise, e.g., after a meal, insulin lowers the blood sugar levels by facilitating blood glucose to move from the blood into the body cells. Thus, when the pancreas does not produce sufficient insulin (a condition known as Type 1 Diabetes) or does not properly utilize insulin (a condition known as Type II Diabetes), the blood glucose remains in the blood resulting in hyperglycemia or abnormally high blood sugar levels.

[0003] The vast and uncontrolled fluctuations in blood glucose levels in people suffering from diabetes cause long-term, serious complications. Some of these complications include blindness, kidney failure, and nerve damage. Additionally, it is known that diabetes is a factor in accelerating cardiovascular diseases such as atherosclerosis (hardening of the arteries), leading to stroke, coronary heart disease, and other diseases. Accordingly, one important and universal strategy in managing diabetes is to control blood glucose levels.

[0004] One element of managing blood glucose levels is the monitoring of blood glucose levels. Conventional in vitro techniques, such as drawing blood samples, applying the blood to a test strip, and determining the blood glucose level using colorimetric, electrochemical, or photometric test meters, may be employed. Another technique for monitoring glucose levels uses an in vivo analyte monitoring system, which measures and stores sensor data representative of glucose levels automatically over time.

[0005] Unlike conventional in vitro blood glucose monitoring approaches, in vivo analyte monitoring systems use an insertable or implantable in vivo sensor that is positioned to be in contact with interstitial fluid of a user for a period of time to detect and monitor glucose levels. Prior to use of an in vivo sensor, at least a portion of the sensor is positioned under the skin. An applicator assembly can be employed to insert the sensor into the body of the user. For insertion of the sensor, a sharp engaged with the sensor, pierces the skin of the user and is then removed from the body of the user leaving the sensor in place. The in vivo-positioned sensor can be connected to other system components such as sensor electronics contained in a unit that can be held onto the skin.

[0006] To realize fully the advantages associated with such systems, what is needed are applicator systems configured to handle insertion, as well as packaging and user interface issues, that are easy-to-use, reliable and minimize both user inconvenience and pain. The present invention provides such solutions and additional or alternative advantages as described below and/or as may be appreciated by those of skill in the art upon review of the subject disclosure.

SUMMARY

[0007] The present invention includes packaging, loading systems, applicators, and elements of the on-body devices themselves. According to embodiments of the present invention, an on-body device includes an electronics assembly and a sensor assembly. The sensor assembly includes a sensor and a connector for coupling the sensor to the electronics assembly. In addition, a sharp can be provided that supports the sensor and allows a distal end of the sensor to be placed under a user's skin. In some embodiments, the invention includes the connection of electrochemical analyte sensors to and/or within associated other monitoring components such as system devices that are configured to be held in place on body. The approaches variously involve the use of unique sensor and unique ancillary element arrangements to facilitate assembly of separate on-body devices and sensor assembly units that are kept apart until the user brings them together. Methods associated with such use also form part of the inventive subject matter.

[0008] Certain embodiments are described that include an analyte sensor (e.g., a glucose sensor) and an applicator assembly to position a portion of the sensor beneath a skin surface, as well as methods of positioning at least a portion of the sensor and methods of analyte testing or monitoring. Further methods include the manner of preparing the applicator assembly. Namely, such acts associated with user assembly and mating of the component parts of a monitoring system.

[0009] As mentioned above, such a monitoring system includes an electronics assembly adapted to adhere to a skin of a subject, a sensor assembly coupled to the electronics assembly to form an on-body device, and an insertion sharp having a longitudinal body including a longitudinal opening to receive at least a portion of the sensor body. The details of the sensor may vary. Exemplary chemistries and constructions are described in any of U.S. Pat. Nos. 5,593,852, 6,284,478, and 6,329,161, each incorporated by reference herein in its entirety. Exemplary form-factors or configurations (e.g., for associated use with an insertion "sharp") are described in any of U.S. Pat. Nos. 6,175,752, 6,565,509, 6,134,461 and 6,990,366 and in US Publication No. 2010/0230285, each incorporated by reference herein in its entirety.

[0010] Likewise, the details of the on-body device may vary. For instance, the on-body device may include sensor electronics and other adaptation to communicate with a monitoring device. Various options for communications facilities (e.g., wireless transmitters, transponders, etc.) are described in detail in US Publication Nos. 2010/0198034 and 2011/0213225, the entirety of the applications hereby incorporated by reference, including cited and incorporated references.

[0011] In some embodiments, systems and methods are provided for assembling and applying the on-body device including assembling the sensor assembly to the electronics assembly and inserting a portion of the sensor under the skin of a user. Thus, the sensor assembly includes a sensor that has a distal portion for operative contact with a fluid of the user. The on-body device also includes an electronics assembly including a housing defining a distal surface adapted for attachment to the skin of the user and a circuit coupleable to the sensor for detecting electrical signals from the sensor. In some embodiments, the system also includes an applicator assembly that has a sleeve defining a distal surface for placement on the skin of the subject, a handle for a user interface, and various internal support, coupling, guide, grasping, stop

and detent features as well as driver elements. In some embodiments, the system may also include a container that stores one or more of the sensor, the sharp, and/or the mount/electronics assembly in a sealed environment within. The container is configured to releasably interface with the applicator assembly for the purpose of loading one or more of the sensor, the sharp, and/or the electronics assembly into the applicator assembly, and readying the applicator assembly for use.

[0012] The present disclosure includes the subject systems, devices, kits in which they are included, and methods of use and manufacture. A number of aspects of such manufacture are discussed herein. Further details can be appreciated in reference to the figures and/or associated description.

BRIEF DESCRIPTION OF THE DRAWINGS

[0013] A detailed description of various aspects, features, and embodiments of the subject matter described herein is provided with reference to the accompanying drawings, which are briefly described below. The drawings are illustrative and may or may not be drawn to scale, with the possibility of some components and features being exaggerated for clarity. Similar components may be numbered identically or not. The drawings illustrate various aspects and features of the present subject matter and may illustrate one or more embodiment(s) or example(s) of the present subject matter in whole or in part.

[0014] FIG. **1** is a flowchart, indicating user activity in handling the subject devices;

[0015] FIGS. **2**A-**2**G illustrate such activity with additional detail;

[0016] FIG. **3** is an assembly view of an applicator or inserter;

[0017] FIG. **4** is an assembly view of a sensor container or loader;

[0018] FIGS. **5**A and **5**B are section views of the container in FIG. **4**;

[0019] FIG. **6** is an assembly view of an alternative container;

[0020] FIG. **7** is a section view of the assembly of FIG. **6**;

[0021] FIG. **8** is an assembly view of yet another sensor container set or loader;

[0022] FIGS. **9**A and **9**B are top and section views, respectively, of the container set assembly of FIG. **8** in stages of operation;

[0023] FIGS. **10**A-**10**N variously illustrate the mechanics of preparing the applicator for use;

[0024] FIGS. **11**A-**11**F illustrate the mechanics of applicator use;

[0025] FIGS. **12**A-**12**D are perspectives illustrating another applicator/container set approach in which the container holds the electronics assembly;

[0026] FIGS. **13**A-**13**C variously illustrate use of the applicator in FIGS. **12**A-**12**D in connection with a locking-sleeve feature;

[0027] FIGS. **14**A and **14**B illustrate an applicator with a removable locking strip;

[0028] FIGS. **15**A-**15**F variously illustrate use of the applicator in FIGS. **14**A and **14**B;

[0029] FIGS. **16**A and **16**B are sectional and detail to views, respectively, of features of the container in FIGS. **15**A-**15**D;

[0030] FIGS. **17**A and **17**B are perspective assembly views illustrating alternative container configurations to that illustrated in FIGS. **16**A and **16**B;

[0031] FIG. **18** is a side-section view illustrating the features of the applicator and container sets variously shown in FIGS. **15**A-**15**F;

[0032] FIGS. **19**A and **19**B are perspective views of a sensor assembly incorporated in the system shown in FIG. **18**;

[0033] FIGS. **20**A and **20**B are perspective views of the operation of a sensor assembly retention unit incorporated in the system shown in FIG. **18**;

[0034] FIGS. **21**A-**21**C are perspective section views illustrating sensor assembly receipt by the sensor mount and sharp withdrawal from the assembled complex;

[0035] FIG. **22** is a perspective assembly view of advantageous sensor and sensor connector elements;

[0036] FIGS. **23**A and **23**B are perspective assembly and final-assembly views, respectively of the sensor components in FIG. **22**;

[0037] FIGS. **24**A and **24**B are top and bottom perspective views, respectively of circuit board components to be used with the assembly shown in FIGS. **23**A and **23**B;

[0038] FIGS. **25**A and **25**B are perspective views illustrating assembly of the subject components in stages;

[0039] FIG. **26** is an assembly view of the on-body/sensor mount unit in FIGS. **25**A and **25**B illustrating an advantageous seal element;

[0040] FIGS. **27**A and **27**B are section views further illustrating the seal element and its relation to the mount in FIG. **26**;

[0041] FIGS. **28**A-F are perspective views of another advantageous sensor and sensor element arrangement;

[0042] FIGS. **29**A-D are perspective views of another advantageous sensor and sensor connector arrangement;

[0043] FIGS. **30**A-**30**C are perspective views illustrating yet another advantageous sensor approach with the sensor as originally produced, modified for use, and shown coupled to a PCB, respectively;

[0044] FIG. **30** is a perspective view illustrating the sensor as configured in FIG. **29**B in contact with a circuit board assembly;

[0045] FIG. **31** is a side-section view showing a comparative approach, in a final on-body sensor assembly;

[0046] FIGS. **32**A and **32**B are perspective views of still other advantageous sensor configurations, these figures illustrating split-sensor approaches;

[0047] FIGS. **33**A-**33**G are plane, side, magnified, and sectional views of an additional sensor configuration;

[0048] FIGS. **33**H-**33**J are plane views of various sensor designs;

[0049] FIGS. **34**A-**34**D are perspective views illustrating combination electrical connector and sensor isolator in yet another advantageous sensor arrangement;

[0050] FIGS. **35**A and **35**B are side assembly and section views, respectively, of the system shown in FIGS. **34**A-**34**D;

[0051] FIG. **35**C is an end-section view, with detail view, FIG. **35**D, illustrating additional sensor features;

[0052] FIG. **36** is a perspective assembly view illustrating a sensor connection approach related to that in FIGS. **34**A-**34**D for a sensor with contacts on a single side;

[0053] FIG. **37** is a perspective partial assembly view illustrating a mount-and-socket interface for the sensor assembly employing the components in FIG. **36**;

[0054] FIG. **38** is a complete assembly view of that illustrated in FIG. **37**;

[0055] FIGS. **39**A and **39**B are perspective assembly and as-assembled views of a stacked non-directional sensor connect arrangement;

[0056] FIG. **40** is a side partial-sectional view of the sensor in FIG. **39** received within an on-body device;

[0057] FIGS. **41**A and **41**B are partial perspective assembly views of another stacked non-directional sensor connection arrangement;

[0058] FIG. **41**C is a section view of the complete assembly of the components variously illustrated in FIGS. **41**A and **41**B;

[0059] FIG. **42** is an assembly view of an advantageous radial arrangement sensor connector assembly;

[0060] FIGS. **43**A and **43**B are reversed perspective views of the mount-side sensor connection component for use with an assembly as shown in FIG. **42**;

[0061] FIG. **44** is a section view of the complete assembly of the components variously illustrated in FIGS. **42**, **43**A and **43**B;

[0062] FIGS. **45**A and **45**B are reversed assembly views of an alternative advantageous sensor connection assembly that can be used like that in FIG. **42**;

[0063] FIGS. **46**A and **46**B are assembly and sectional views, respectively of a complete on-body device employing the sensor and connection elements illustrated in FIGS. **45**A and **45**B;

[0064] FIG. **47**A-**47**C are assembly and cross-sectional views of an on-body device including an integrated connector for the sensor assembly;

[0065] FIGS. **48**A-**48**D are construction views of an on-body subassembly;

[0066] FIG. **48**E is a perspective view of a complete on-body electronics subassembly;

[0067] FIGS. **49**A-**49**D illustrate the process of co-molding/overmolding the assembly in FIG. **48**E;

[0068] FIGS. **50**A-**50**C are assembly and sectional views of an alternative snap-together approach with the assembly in FIG. **48**E; and

[0069] FIGS. **51**A-**51**B are assembly views illustrating adhesive backing application in producing a final on-body device ready for use as shown in perspective-view FIG. **51**C.

DETAILED DESCRIPTION

[0070] Before the present disclosure is further described, it is to be understood that this disclosure is not limited to the particular embodiments described, as such may, of course, vary. It is also to be understood that the terminology used herein is for the purpose of describing particular embodiments only, and is not intended to be limiting, since the scope of the present disclosure will be limited only by the appended claims.

[0071] As will be apparent to those of skill in the art upon reading this disclosure, each of the individual embodiments described and illustrated herein includes discrete components and features which may be readily separated from or combined with the features of any of the other several embodiments without departing from the scope or spirit of the present disclosure.

[0072] Where a range of values is provided, it is understood that each intervening value, to the tenth of the unit of the lower limit unless the context clearly dictates otherwise, between the upper and lower limit of that range and any other stated or intervening value in that stated range, is encompassed within the disclosure. The upper and lower limits of these smaller ranges may independently be included in the smaller ranges, and are also encompassed within the disclosure, subject to any specifically excluded limit in the stated range. Where the stated range includes one or both of the limits, ranges excluding either or both of those included limits are also included in the disclosure.

[0073] Unless defined otherwise, all technical and scientific terms used herein have the same meaning as commonly understood by one of ordinary skill in the art to which this disclosure belongs. Although any methods and materials similar or equivalent to those described herein can also be used in the practice or testing of the present disclosure, exemplary methods and materials are now described. All publications mentioned herein are incorporated herein by reference to disclose and describe the methods and/or materials in connection with which the publications are cited.

[0074] As used herein and in the appended claims, the singular forms "a," "an," and "the" include plural referents unless the context clearly dictates otherwise. It is further noted that the claims may be drafted to exclude any optional element. As such, this statement is intended to serve as antecedent basis for use of such exclusive terminology as "solely," "only" and the like in connection with the recitation of claim elements, or use of a "negative" limitation.

[0075] The publications discussed herein are provided solely for their disclosure prior to the filing date of the present application. Nothing herein is to be construed as an admission that the present disclosure is not entitled to antedate such publication by virtue of prior disclosure. Further, the dates of publication provided may be different from the actual publication dates which may need to be independently confirmed.

[0076] Various exemplary embodiments of the disclosure are described below. Reference is made to these examples in a non-limiting sense. They are provided to illustrate more broadly applicable aspects of the present disclosure. Various changes may be made to the disclosure described and equivalents may be substituted without departing from the true spirit and scope of the disclosure. In addition, many modifications may be made to adapt a particular situation, material, composition of matter, process, process act(s) or step(s) to the objective(s), spirit or scope of the present disclosure. All such modifications are intended to be within the scope of the claims made herein.

Applicator and Container Overview

[0077] Turning to FIG. **1**, a flowchart depicting an example method **100** of using various systems of the present invention is provided. In some embodiments, a user starts with unpacking the container (**102**) and unpacking the applicator (**104**). Unpacking the container (**102**) can include removing a cover that provides a sterile seal to the container contents and unpacking the applicator (**104**) can include removing an end cap that provides a sterile seal to the internal portion of the applicator. Next, in an assembly operation (**106**), the applicator is inserted into the container to merge or connect the sensor assembly and the electronics assembly together to form an on-body device and an insertion needle or sharp. In some embodiments, the user unlocks the applicator or removes a locking element to ready the applicator for use. The process of the assembly operation (**106**) and the constituent components are described in detail below.

[0078] Next, once the user has chosen an application site, an on-body device application operation (**108**) is performed. In the application operation (**108**), the user places the applicator on the skin of the insertion site and then applies a force to install the on-body device. The applicator is driven to insert the distal end of the sensor through the user's skin, adhere the on-body device to the skin surface, and retract the sharp into the applicator for disposal. In some embodiments, the user performs the application operation (**108**) by applying force to the applicator where the force applied is a single, continuous pushing motion along the longitudinal axis of the applicator that once started, causes the applicator to perform the application operation (**108**) such that the applicator does not stop operation until completion. The applicator is configured to relay action/audible cues to the user so that all three of the above listed actions happen automatically in response to applying the force to the applicator causing it to trigger. Advantageously, an adhesive of the on-body device does not contact the user until the application operation (**108**) is performed. So, the even after the applicator has been placed on the skin, the applicator can be moved to a different location up until the application operation (**108**) is performed without damage to the apparatus or other system components. In a post application stage (**110**), use of the sensor for monitoring the user's analyte level occurs during wear followed by appropriate disposal.

[0079] Details of method **100** are illustrated in the sequence of drawings shown in FIGS. **2**A to **2**G. In FIG. **2**A, one of the highlighted application sites **202**, **204** on a user **200** is selected. In some embodiments, other application sites may be used. In some embodiments, a site preparation operation may optionally be performed. The application site **202**, **204** may be shaved, exfoliated, cleaned, or otherwise treated to better adhere the on-body device. More specifically, the skin at the site of the user's body where the on-body device will be adhered may be prepared to receive the on-body device. For example, the skin may be shaved with a razor, cleaned with isopropyl alcohol (IPA), and exfoliated with an abrasive. A mechanically exfoliating element can be used to remove an outer layer of dead skin and expose newer skin below. These elements include: microfiber exfoliating cloths; pumice or other abrasive mineral; metal-stamped components of a rasp/file type configuration; synthetic scouring material, e.g., Scotch-Brite®; an alternate adhesive tape or patch to be applied and stripped off to remove dead skin; and organic abrasive elements such as salt, crushed almond shells, apricot kernels, etc. Likewise, a chemically exfoliating element may be used to prepare the site, including: mild acids such as alpha hydroxyl acid, beta-hydroxyl acid and salicylic acid; and fruit enzymes. Such chemically abrasive element(s) may be incorporated in a preparation pad, towelette, swab or be supplied otherwise. In some embodiments, the end cap of the applicator may include one or more exfoliating elements. In some embodiments, the end cap may be textured or otherwise formed to provide a surface that can be used to exfoliate the skin of the site where the on-body device will be adhered. Exfoliating away an outer layer of dead skin before application may allow the on-body device to better adhere to the skin for a longer period of time.

[0080] FIG. **2**B illustrates loader or container **206** preparation, including removing cover **208** from a casing **210**. The container **206** includes the casing **210** which holds the sensor assembly and a sharp (or in some embodiments, the electronics assembly). FIG. **2**C illustrates applicator **212** preparation including separating a removable applicator end cap **214** from applicator assembly **216**. In some embodiments, container **206** and applicator **212** can initially be packaged connected together to simplify packaging and shipping. For example, the removable applicator end cap **214** may include a boss or other feature that couples or snaps to a corresponding feature on the exterior of the container **206**. This connection is only operative to hold the two pieces together for shipping purposes and not for operation of the system. Thus, in some embodiments, before removing the cover **208** from the casing **210** and separating the removable end cap **214** from the applicator assembly **216**, in an initial unpacking step, the container **206** and applicator **212** are separated from each other.

[0081] As shown in FIG. **2**D, once alignment indicators **218**, **220** are aligned, the user assembly operation **106** (FIG. **1**) is achieved by pushing the applicator assembly **216** firmly into the container **206** to retrieve a sensor and a sharp from the container and to unlock a guide sleeve of the applicator assembly **216**. In FIG. **2**E, the assembled and unlocked applicator assembly **216** is placed on the application site **204** (or **202**) and pushed down firmly to effect on-body device application **108** (FIG. **1**). As shown in FIG. **2**F, upon used applicator assembly **216** removal from the application site **204**, on-body device **222** is adhered to the user. In some embodiments, as illustrated in FIG. **2**G, analyte levels detected by the sensor of the on-body device **222** can be retrieved over a wireless communication link **224** via a communications facility (e.g., a transmitter, a transponder, etc.) within the on-body device **222** by a receiver unit **226** (referred to alternatively as a "reader unit" or "receiver device", or in some contexts, depending on the usage, as a "display unit," "handheld unit," or "meter"). Relevant information (e.g., analyte level trend data, graphs, etc.) is presented on the receiver unit's display **228**.

[0082] The applicator **212**, container **206**, and associated components shown in FIGS. **2**A to **2**G are illustrated in more detail in FIGS. **3** and **4**. In addition, numerous other variations are described in detail below. These alternative embodiments may operate differently insofar as their internal workings, but may present no difference concerning user activity.

[0083] Turning to FIG. **3**, applicator **212** includes a removable cap **214** and applicator assembly **216**. The removable cap **214** can be secured to the applicator assembly **216** via complimentary threadings **306**, **306'**. End Cap **214** fits with the applicator **216** to create a sterile packaging for interior of the applicator **216**. Therefore, no additional packaging is required to maintain sterility of the interior of the applicator **216**. In some embodiments, the end (not visible) of the removable end cap **214** can include one or more openings, which can be sealed by a sterile barrier material such as DuPont™ Tyvek®, or other suitable material, to form seal **308**. Such provision allows for ethylene oxide (ETO) sterilization of the applicator **212** through the seal **308** when closed. In some embodiments, the openings in the removable cap **214** may not be present and the removable cap **214** may be made from a sterile process-permeable material so that the interior of the applicator can be sterilized when the cap is mated to it, but that maintains sterility of the interior of the cap after exposure to the sterility process. In some embodiments, ETO sterilization is compatible with the electronics within the electronics assembly **310** and with the associated adhesive patch **312**, both of which can be releasably retained within the applicator assembly **216** until applied to the user. As shown,

the applicator assembly **216** includes a housing **314** including integrally formed grip features **316** and a translating sheath or guide sleeve **318**.

[0084] In reference to FIG. **4**, the container **206** includes a cover **402** (e.g., made of a removable material such as foil) and casing **404**. Housed within the casing **404** is a desiccant body **412** and a table or platform **408**. In some embodiments, the desiccant body **412** can have an annular shape so that the desiccant body **412** can be disposed within the casing **404** and a sensor assembly support (not visible in FIG. **4** but see **512** in FIGS. **5**A and **5**B) can extend up through the desiccant body **412**. This arrangement allows the container **206** to include a desiccant without requiring any additional height to accommodate the desiccant. A sensor assembly **410** is snap-fit or otherwise held by the sensor assembly support **512**. The sensor assembly **410** can also be snap-fit or otherwise held by the platform **408** (e.g., using fingers **414**). With the cover **402** sealed, the container **206** can be subjected to gamma or radiation (e.g., e-beam) sterilization, an approach compatible with the chemistry of the sensor included in the sensor assembly **410**. Like the applicator **212**, the container **206** is its own sterile packaging so that no additional packaging, other than the casing **404** and the cover **402**, is required to maintain sterility of the interior of the casing.

[0085] The container **206** and the applicator **212** may be sterilized by different sterilization approaches. For example, a sensor contained in a container **206** may require one type of sterilization process and the contents of an applicator **212**—for example, electronics contained within the interior of the applicator **212**—may require another type of sterilization process. The utility of a two-piece separable but combinable system (i.e., the container **206** and the applicator **212**) enables the respective sterilization of the two pieces and sterility maintenance before the two are connected together for use. In other words, separately sealing the container **206** and the applicator **212** facilitates the use of otherwise incompatible sterilization methods for these two components. For example, one type of sterilization which could damage the chemistry of the sensor can be used to sterilize the applicator **212** including the electronics assembly **310** including the adhesive patch **312**. Likewise, another sterilization process which could damage the electronics in the electronics assembly **310** (and/or the adhesive patch **312** used to adhere the electronics assembly **310** to the user's skin) can be used to sterilize the container **206** including the sensor therein. Still other advantages may exist, given different shelf-life attributes for the active (i.e., electronic, chemical, etc.) elements. In some embodiments, all components can be sterilized using the same sterilization technique, such as, but not limited to ETO and e-beam sterilization, etc.

[0086] In some embodiments, the platform **408** in the container **206** functions as an anti-tamper barrier for the sensor assembly **410** and prevents direct handling of the sensor assembly **410** by the user. More specifically, the platform **408** is disposed to protect and assist in the retention of the sensor, a sharp, and an associated connector. In some embodiments, the platform **408** is locked in place within the casing **404** until released by a longitudinally directed force from the applicator assembly **216** during the user assembly operation **106** (FIG. **1**). In other words, as the guide sleeve **318** of the applicator assembly **216** is inserted down against the platform **408**, the sleeve **318** releases a locking mechanism (e.g., a catch) and allows the platform to translate deeper into the casing **404**. Additionally, features of the casing **404** can be employed to unlock a guide sleeve lock feature of the applicator assembly **216**. In some embodiments, the platform **408** in the container **206** can only be unlocked if the guide sleeve **318** of the applicator assembly **216** is inserted into the container **206** with alignment marks on the applicator assembly **216** and the container **206** properly aligned. (See FIG. **10**C and associated text below).

[0087] FIG. **5**A is an isometric, cross-sectional view of the casing **404** of FIG. **4**. FIG. **5**B is an assembled, isometric, cross-sectional view of the container **206** of FIG. **4** including the component parts. As can be seen in FIGS. **5**A and **5**B, platform **408** is surrounded by multiple locking features **502** (at least one is advantageously provided in some embodiments). Each of locking features **502** includes a cantilevered arm **504** with a tongue **506** received in a slot or groove **508**. So disposed, the platform **408** is locked in place. When the arm(s) **504** are urged inward, in the direction represented by arrows P and P', from a concentrically disposed sleeve **318** (not shown) of the applicator assembly **216** riding over ramp (s) **510**, the locking feature(s) **502** are released and the platform **408** can translate in direction B along a longitudinal axis of the combined applicator assembly **216** interfaced with the container **206**. The translation of the platform **408** into the casing **404** provides access to sensor assembly **410** by the applicator assembly **216**. Until the platform **408** is unlocked and driven down into the casing **404**, the sensor assembly **410** is otherwise isolated from being touched or otherwise handled/accessed by a user. In some embodiments, additional detent ramp features can be provided to hold the platform **408** until depressed with force applied by a user. In addition, various key-and-way or slot-and-groove guidance features can be provided to control such motion and ensure that it is smooth and linear (i.e., to avoid platform canting, binding, etc.)

[0088] In some embodiments, the sleeve/ramp interface with associated locks relies only on detent features to maintain the platform's position. So configured, inadvertent handling of the sensor assembly can be avoided. The detent(s) can be tuned to require deliberate action to clear the platform **408**.

[0089] In some embodiments, alternative mechanisms and arrangements may be employed to provide a platform **408** that collapses upon application of force via the applicator assembly **216** by the user. For example, FIGS. **6** and **7** depict an alternative container **600** embodiment including an alternative platform **602** arrangement. Here, a collapsible armature or linkage **604** supports the platform **602**. This linkage **604** is integrally guided and spring-loaded by virtue of the living hinge design of the linkage **604**. Alternatively, a coil spring could be employed along with guides for the platform **602**. A sleeve **318** (FIG. **3**) (FIG. **3**) of an applicator **216** or the base of sensor mount unit **606** itself, can be used to translate the platform **602** to provide clearance for sensor assembly **608** access and pick-up by the applicator **216** and incorporation as a complete assembled on-body device **222**. The container **600** includes a casing **610** and can also include a desiccant ring **612** to protect the sensor assembly **608** from moisture.

[0090] Another embodiment for sensor storage and protection is illustrated in FIG. **8** with container **800**. As with the prior embodiments, this embodiment can also include an annular desiccant ring **612**. Casing **802** is provided in connection with a support base **804**. The support base **804** receives sensor assembly **608** and a frame **806**. The frame **806**

includes a pivoting door **808**. As shown, the support base **804** incorporates three channels **810** for receipt of frame legs **812** to serve as guidance. In its up/closed position shown in FIG. **9**A, door **808** protects the sensor assembly **608** from contact by the user. Spiral ramp features interacting between the support base **804** and the frame **806** cause the door **808** to swing open as the frame **806** is moved down as shown in FIG. **9**B. Likewise, features of the frame **806** can hold the sensor assembly **608** against the support base **804** until the frame **806** is pushed down by user activity.

[0091] Similar to the container embodiment **206** shown in FIGS. **5**A and **5**B, the frame **806** in container **800** can be locked in place and released by applicator sleeve introduction. A support ring **902** may lock against boss or tang **814** until the boss **814** is urged inward by the action of an applicator sleeve along angled interface surface **904** of each leg **812**. In some embodiments, the legs **812** can be biased outward with a preload but in other embodiments, the locking/unlocking function can operate without such biasing. FIG. **9**A illustrates the locked configuration, whereas FIG. **9**B illustrates unlocked/translated relation of components.

[0092] FIGS. **10**A to **10**N illustrate example details of embodiments of the internal device mechanics of preparing the applicator **212** for use, using the container **206**. All together, these drawings represent an example sequence of assembling an on-body device **222** by connecting a sensor assembly **410** stored in the container **206** with an electronics assembly **310** stored in the applicator **212**. In addition, the sequence prepares the applicator **212** to apply the assembled on-body device **222** to the user. Modification of such activity for use with the alternative container embodiments (as described above or others) can be appreciated in reference to the same by those with skill in the art.

[0093] FIGS. **10**A and **10**B show container **206** and applicator **212** with their constituent parts, along with arrows indicating the manner of cover **402** and cap **214** removal, respectively. Upon peeling off foil cover **402** from the casing **404**, the platform **408** within is locked, thus protecting the sensor assembly **410** (not visible but see FIG. **4**) which includes a sensor, a sensor support (also referred to as a plug), a connector, and a sharp. (These components are discussed in detail below.) Likewise, upon removal of cap **214** from the applicator assembly **216**, the applicator **212** is locked. As a result of being locked, a guide sleeve **318** (not visible but see FIG. **3**) cannot be collapsed into the applicator's housing **314**.

[0094] In FIG. **10**C, applicator assembly **216** is set within container **206**. The two components **206**, **216** are rotated and advanced until mechanical alignment features M and M' engage, allowing the applicator assembly **216** to register and sit level within the container **206**. Visual alignment indicators A and A' assist or guide the user to quickly find the proper alignment position. Note that in some embodiments, the platform **408** cannot be unlocked to translate into the container **206** unless the alignment features M and M' are properly aligned. FIG. **10**D depicts the components **206**, **216** with the mechanical alignment features M, M' engaged. Sleeve **318** passes over platform **408**, with the platform **408** nested concentrically inside the inner diameter of sleeve **318**.

[0095] Cross-sectional views FIGS. **10**E and **10**F illustrate the relationship of parts overviewed in FIGS. **10**C and **10**D. When the sleeve **318** of applicator assembly **216** is seated onto the platform **408** of the container **206** and pushed downward, platform locking features **502** disposed around the platform **408** on locking ribs **1002** are unlocked to allow the platform **408** to translate along a longitudinal axis (labeled "Z") of the interfaced components **206**, **216**. More specifically, a portion of platform **408** bends and platform locking arms **504** are displaced inward as indicated by arrow P to clear locking grooves **508** in the locking ribs **1002** of casing **404**, thus unlocking the platform **408**. At this point, the platform **408** is held in place by guide ribs **1004** each providing a detent feature **1006** between the platform **408** and the guide ribs **1004** that can be overcome by further downward pressure applied by the user upon further depression of the applicator assembly **216** in the direction of the longitudinal axis Z.

[0096] Turning now to FIGS. **10**G and **10**H, the dropping of the unlocked platform **418** is illustrated. FIG. **10**G depicts further depression of the applicator assembly **216** in the direction of the longitudinal axis Z. The force from the sleeve **318** causes inward, radial deflection of a portion of the platform **408**. The effect is that detent arms **1008** are flexed down, inward and away from the detent feature **1006** of guide ribs **1004** as shown. This action releases the platform **418** and the applicator assembly **216** into freefall into the container **206**. In some embodiments, the force to flex detent arms **1008**, or in other words, the force to overcome the resistance from the detent features **1006**, is selected to create a predetermined amount of momentum sufficient to ultimately properly mate the electronics assembly **310** with the sensor assembly **410** and unlock the sleeve **318**. In some embodiments, the force to overcome the resistance from the detent features **1006** is from approximately 1 N to approximately 23 N. Other practicable values are possible.

[0097] In FIG. **10**H, once detent arms **1008** of the platform **418** are past the detent features **1006**, a relieve or undercut **1010** in each of the guide ribs **1004** provides increased clearance for the platform **418** to reduce sliding friction as the sleeve **318** and platform **418** slide or telescope further into the container's casing **404** along the longitudinal axis Z (FIG. **10**F). Also, one or more flexible grasping arms **1012** previously in contact with the sensor assembly **410**, particularly through sharp boss **1014**, are moved from a stabilizing configuration in FIG. **10**G to a freed state or configuration in FIG. **10**H. In other words, as the platform **418** translates further into the container **206**, the sharp boss **1014** of the sensor assembly **410** protrudes through a central opening in the platform **418** and pushes the flexible grasping arms **1012** out of the way.

[0098] Turning now to FIGS. **10**I and **10**J, a cross-sectional view depicting a slightly different cut plane than the prior views is provided to illustrate additional features. In FIG. **10**I, sleeve lock arms are shown engaged with a sleeve lock ledge **1018**. This engagement locks the applicator assembly **216** and prevents the sleeve **318** from being able to be retracted or pushed into the housing **314** of the applicator assembly **216**. In FIG. **10**J, as the applicator assembly **216** is further advanced into the container **206** along the longitudinal axis Z (FIG. **10**F), sleeve unlock features contact and bend the sleeve lock arms **1016** clear of the sleeve lock ledge **1018** thereby unlocking the applicator assembly **216**. Note that in the particular example embodiment depicted in FIGS. **10**I and **10**J, the sleeve lock ledge **1018** is formed in a carrier **1022** of the electronics assembly **310**.

[0099] When the platform **418** bottoms-out in the container **206** as shown in FIG. **10**J, the sleeve **318** of the applicator assembly **216** is fully unlocked/released and ready to move. Note that while the sleeve lock arms **1016** are shown flexing outward to unlock, in some embodiments, the sleeve lock

arms **1016** can be oriented to flex radially inward to free the elements. The same may hold true for the various locking/unlocking features of the present invention. However, the present arrangement offers advantages in terms of a coordinated whole providing an advantageous form factor and minimized container casing size (a factor that affects the user experience) in which the carrier **1022** of the electronics assembly **310** is coaxially arranged. Regarding the carrier **1022**, it is advantageously designed with unique carrier arm features as detailed in, for example, U.S. patent application Ser. No. 13/071,461, the disclosure of which is incorporated herein by reference.

[0100] In FIGS. **10**K and **10**L, now that the sleeve **318** of the applicator assembly **216** is fully unlocked, the momentum along the longitudinal axis Z (FIG. **10**F) from the force used to overcome the resistance of the detent features **1006** (FIG. **10**H) causes three additional concurrent actions. First, even though the sleeve **318** cannot descend any further into the container **206** (since it is in contact with the platform **418** which is bottomed-out), the housing **314** of the applicator assembly **216**, the carrier **1022**, and the electronics assembly **310** are free to continue to descend into the container **206**, now that the sleeve **318** is unlocked as shown in FIG. **10**L.

[0101] Second, as the electronics assembly **310** descends further along the longitudinal axis Z (FIG. **10**F), the sensor assembly **410** is forced into an opening in the electronics assembly **310** which couples the sensor to the electronics and completes assembly of the on-body device **222** (FIG. **2**F). In some embodiments, mating snap features on the sensor assembly **410** and the electronics assembly **310** can be used to compel the components to remain locked and compressed together to insure a sealed, reliable connection. As an alternative to mating snap features, in some embodiments, the sensor assembly **410** and the electronics assembly **310** may be coupled by a light press fit or other connection method. However, the positive interaction and lock of snap features is an advantage. So too is the minimal force used to deflect fine locking features that spring back for engagement.

[0102] Third, along with the housing **314**, the carrier **1022**, and the electronics assembly **310**, a sharp retraction assembly **1024** also continues to descend into the container **206** along the longitudinal axis Z (FIG. **10**F) and is forced to receive the sharp boss **1014** of the sensor assembly **410**. The conical head of the sharp boss **1014** is pushed past a radial arrangement of flexible arms **1026** of the sharp retraction assembly **1024**. The flexible arms **1026** bend outwardly, as they are forced to ride against the passing conical surface of the head of the sharp boss **1014**. The sharp is thus thereby engaged by the sharp retraction assembly **1024** as the flexible arms **1026** snap back into place once the head of the sharp boss **1014** has passed by, securely grasping the head at the narrowed neck portion of the sharp boss **1014**. Note that a base of the sharp boss **1014** may be included to limit insertion into the sharp retraction assembly **1024** through interference with a stop limit or shoulder of the flexible arms **1026**. FIG. **10**K illustrates the arrangement immediately before the above three actions have completed and FIG. **10**L illustrates the resulting arrangement immediately after the actions have completed.

[0103] In some embodiments, the connection features between the sharp boss **1014** of the sensor assembly **410** and the sharp retraction assembly **1024** can be otherwise configured. For example, the sharp retraction assembly **1024** can include a conical channel formed from a radial arrangement of inwardly biased flexible finger members configured to receive the head of sharp boss **1014** such that once the head has passed through the channel, the flexible fingers conform to the narrowed neck of the sharp boss **1014**. With the fingers so conformed, the sharp boss **1014** is captured by the sharp retraction assembly **1024**. Retention force is limited only by material strength because the self-energizing lock is not prone to slip between the pieces.

[0104] Turning to FIG. **10**M, a slightly rotated view, relative to FIG. **10**L, is shown. When the sharp boss **1014** is engaged in the sharp retraction assembly **1024**, the sensor assembly **410** is coupled to the electronics assembly **310** completing assembly of the on-body-device **222**, and the sleeve **318** is unlocked, platform locking arms **504** and detent arms **1008** have engaged undercut grooves **1028** in the container **206**, thereby locking the platform **418** in the casing **404**. This engagement between the platform **418** and the casing **404** marks the final position of the container **206** from which the loaded applicator assembly **216** is withdrawn for use to apply the on-body device **222** to the user.

[0105] Now, once removed from the container **206**, the applicator assembly **216** is ready to "fire" as illustrated in FIG. **10**N. As such, the applicator assembly **216** is ready to use as in application **108** described in connection with FIG. **2**E. Here, the applicator assembly **216** has already been unlocked by interaction with the container **206**, and the sensor assembly **410** is coupled to the electronics assembly **310**. The sharp **1030** extends from the on-body device **222** which is held in the sleeve **318** of the applicator assembly **216** as shown.

[0106] FIGS. **11**A to **11**F illustrate example details of embodiments of the internal device mechanics of "firing" the applicator assembly **216** to apply the on-body device **222** to a user and including retracting the sharp **1030** safely back into the used applicator assembly **216**. All together, these drawings represent an example sequence of driving the sharp **1030** (supporting a sensor coupled to the on-body device **222**) into the skin of a user, withdrawing the sharp while leaving the sensor behind in operative contact with interstitial fluid of the user, and adhering the on-body device to the skin of the user with an adhesive. Modification of such activity for use with the alternative applicator assembly embodiments and components can be appreciated in reference to the same by those with skill in the art.

[0107] Turning now to FIG. **11**A, a sensor **1102** is supported within sharp **1030**, just above the skin **1104** of the user. Rails **1106** (optionally three of them) of an upper guide section **1108** may be provided to control applicator assembly **216** motion relative to the sleeve **318**. The sleeve **318** is held by detent features **1110** within the applicator assembly **216** such that appropriate downward force along the longitudinal axis of the applicator assembly **216** will cause the resistance provided by the detent features **1110** to be overcome so that the sharp **1030** and on-body device **222** can translate along the longitudinal axis into (and onto) the skin **1104** of the user. In addition, catch arms **1112** of carrier **1022** engage the sharp retraction assembly **1024** to maintain the sharp **1030** in a position relative to the on-body device **222**.

[0108] In FIG. **11**B, user force is applied to overcome or override detent features **1110** and sleeve **318** collapses into housing **314** driving the on-body device **222** (with associated parts) to translate down as indicated by the arrow L along the longitudinal axis. An inner diameter of the upper guide section **1108** of the sleeve **318** constrains the position of carrier arms **1112** through the full stroke of the sensor/sharp insertion

process. The retention of the stop surfaces **1114** of carrier arms **1112** against the complimentary faces **1116** of the sharp retraction assembly **1024** maintains the position of the members with return spring **1118** fully energized.

[0109] In FIG. **11**C, sensor **1102** and sharp **1030** have reached full insertion depth. In so doing, the carrier arms **1112** clear the upper guide section **1108** inner diameter. Then, the compressed force of the coil return spring **1118** drives angled stop surfaces **1114** radially outward, releasing force to drive the sharp carrier **1120** of the sharp retraction assembly **1024** to pull the (slotted or otherwise configured) sharp **1030** out of the user and off of the sensor **1102** as indicated by the arrow R in FIG. **11**D.

[0110] With the sharp **1030** fully retracted as shown in FIG. **11**E, the upper guide section **1108** of the sleeve **318** is set with a final locking feature **1120**. As shown in FIG. **11**F, the spent applicator assembly **216** is removed from the insertion site, leaving behind the on-body device **222**, and with the sharp **1030** secured safely inside the applicator assembly **216**. The spent applicator assembly **216** is now ready for disposal.

[0111] Operation of the applicator **216** when applying the on-body device **222** is designed to provide the user with a sensation that both the insertion and retraction of the sharp **1030** is performed automatically by the internal mechanisms of the applicator **216**. In other words, the present invention avoids the user experiencing the sensation that he is manually driving the sharp **1030** into his skin. Thus, once the user applies sufficient force to overcome the resistance from the detent features of the applicator **216**, the resulting actions of the applicator **216** are perceived to be an automated response to the applicator being "triggered." The user does not perceive that he is supplying additional force to drive the sharp **1030** to pierce his skin despite that all the driving force is provided by the user and no additional biasing/driving means are used to insert the sharp **1030**. As detailed above in FIG. **11**C, the retraction of the sharp **1030** is automated by the coil return spring **1118** of the applicator **216**.

[0112] As for further details of the operation, alternative embodiments may be appreciated in view of related approaches discussed below, others in review of the incorporated subject matter and still more appreciated by those with skill in the art based upon further review of the figures which depict actual hardware produced according to various aspects of the subject disclosure.

[0113] Turning to FIGS. **12**A to **12**D an alternative applicator/container set approach is now described. As shown in FIG. **12**A, the container **1200** holds the electronics assembly **1202**. This is in contrast to the above embodiments wherein the relationship between the sensor assembly and the electronics assembly was reversed. Upon aligning markers M and M', the applicator **1204** is inserted in the container **1200**. In FIG. **12**B, the units are merged. In FIG. **12**C, the parts are separated. Finally, in FIG. **12**D the applicator **1204** is unlocked (e.g., in some embodiments by twisting the sleeve **1206** within the applicator **1204**, in some embodiments by the act of loading the electronics assembly **1202** into the applicator **1204**, or in some embodiment by the act of removing a locking strip from the sleeve **1206**) and ready for use with the assembled on-body device (not visible) including the sensor assembly loaded therein. These various alternative embodiments are illustrated in FIG. **13**A to **15**F.

[0114] FIGS. **13**A to **13**C variously illustrate use of the applicator **1204** of FIGS. **12**A to **12**D in connection with a locking-sleeve feature **1206**. FIG. **13**A shows the sleeve **1206** locked as indicated by the closed window **1208**. After twisting the sleeve **1206** relative to the rest of the applicator **1204** to unlock the sleeve **1206**, a visual indication (e.g., open window **1208'**) is seen when the applicator **1204** is ready for use as presented in FIG. **13**B. Upon use, as shown in FIG. **13**C, the unit is compressed with the sleeve **1206** collapsed into the applicator **1204**.

[0115] FIGS. **14**A and **14**B illustrate an alternative applicator **1400** embodiment with a removable locking strip **1402**. With the locking strip **1402** in place around the sleeve **1406**, the sleeve **1406** cannot be pushed into the applicator **1400**. The strip **1402** includes a pull-tab **1404** and adhesive or other fastening member to keep it in place until removed and the applicator **1400** is ready for use.

[0116] FIGS. **15**A to **15**F illustrate preparation of the applicator **1400** of FIGS. **14**A and **14**B for use with a container **1500**. Once the cover **1502** has been removed from the container **1500** and the cap **1506** removed from the applicator **1400**, the applicator **1400** is inserted into container **1500** to load the electronics assembly **1504** into the applicator **1400** and mate the sensor assembly (not shown) with the electronics assembly **1504** as shown in FIGS. **15**B and **15**C. Once loaded, the applicator **1400** is removed from the container **1500** as shown in FIG. **15**D. FIG. **15**E shows the applicator **1400** loaded with the assembled on-body device **222** and ready for sensor/sharp insertion. The locking strip **1402** is removed from the sleeve **1406** and the open ready indicator **1208'** signals that the applicator **1400** is ready to be used. FIG. **15**F illustrates the system after such action has been taken in transferring the on-body device **222** from the applicator **1400** onto the skin of a user.

[0117] FIGS. **16**A and **16**B are sectional and detail views, respectively, of features of the container **1500** in FIGS. **15**A-**15**F. Specifically, the on-body device **1604** is shown in the container **1500** with an adhesive patch **1602** and its backing **1606**. The backing **1606** is spiral-cut and attached to a boss so that when the on-body device **1604** is transferred from the container **1500**, the peel-away backing **1606** is left behind. In this fashion, the adhesive patch **1602** remains covered by the backing **1606** so it does not inadvertently adhere to the container **1500**.

[0118] As an alternative to the spiral peel-around backing approach of FIGS. **16**A and **16**B, FIGS. **17**A and **17**B are perspective assembly views illustrating alternative container **1702** configurations for capturing separate peel-off "butterfly" wings or bilateral liner panels from the adhesive-backed patch of the on-body device **1706**. In each case, a two-part base **1704** is provided for gripping the peel-away backing liner pieces. Naturally, the base **1704** is adapted to fit in the container casing. In some embodiments, the container **1702** can be configured differently. In the version depicted in FIG. **17**A, traction/tread **1708** is provided to assist with grip of the backing. In the version depicted in FIG. **17**B, ramps **1710** are provided to assist in removing the backing. In another version, the base can be a one-piece molding incorporating a living hinge in a "clamshell" arrangement. The backing liner piece(s) may be captured along a center line or at an offset location. However configured, the base **1704** may snap into place with complementary band and rib interface features associated with each of the base **1704** and container **1702**, snaps, or other features. As with other assemblies described herein, these features may alternatively be press fit, ultrasonically welded or otherwise secured in place.

[0119] FIG. **18** is a cross-sectional view illustrating features of the applicator and container sets shown in FIGS. **15**A-**15**F. The embodiment shown in FIG. **18** includes several of the features described in connection with the alternative loading approach above. However, it is simplified in approach. Most notably, the container **1806** includes no active/mobile components. Once the applicator **1800** is pressed down into the container **1806**, the on-body device **1808** is assembled (e.g., the sensor assembly is mated with the electronics assembly), released from the container **1806** (e.g., using releasable latches), and held by the applicator **1800** (e.g., using latching arms). This embodiment offers an advantage of not having to expose the adhesive of the on-body device **1808** as in other embodiments. Furthermore, the position of the on-body device **1808** provides a stable surface for the sensor assembly insertion. Other embodiments where the applicator is pre-loaded with the on-body device do provide the advantage of not having to perform the above-described hand-off Also, the use or inclusion of a protector for the sharp is avoided.

[0120] FIGS. **19**A and **19**B show a sensor assembly **1902** in association with a needle guard **1904**. In use, a distal interface feature (e.g., a barb) of the needle guard **1904** is captured by a complimentary split ring or other feature in the container during the assembly of the on-body device. Then, when the applicator is separated from the container, the needle guard **1904** is retained in the container and the sharp is unsheathed. In some embodiments, the needle guard **1904** may be made from polypropylene with a thermoplastic elastomer (TPE) insert to releasably secure the sharp. Other materials may be selected.

[0121] Other materials may be selected for construction of other elements of the present invention. For example, the applicator housing may be made of polycarbonate or any other practicable material. The guide sleeve, container, etc. may be constructed from acetyl (for reason of lubricity of sliding parts). Any number of the parts may be injected molded, thermoformed or otherwise produced.

[0122] Regarding the sensor assembly hand-off to the electronics assembly, FIGS. **20**A and **20**B illustrate a manner of holding a sensor assembly boss **2006** to the element **2002** that will pick up the electronics assembly **2004** to form the on-body device. Spring armatures **2008** clip to a lip of the sensor assembly **2006** and hold the sensor assembly **2006** within the applicator during shipping and handling. When the applicator and the container are brought together, lever arms **2010** contact the on-body device **2004**, causing the associated spring armatures (or "spring arms") to twist and rotate the connection away from the lip of the sensor assembly, thereby releasing the sensor assembly. A chamfer on the sensor assembly boss can help ensure alignment and proper actuation of the one or more (e.g., three) torqueing spring armatures **2008**.

[0123] FIGS. **21**A-**21**C illustrate an alternative hand-off approach. In this embodiment, a sensor assembly gripper **2106**, with a light snap fit, grabs and orients the sensor assembly **2104** for connection to the electronics assembly **2102**. After the sensor assembly **2104** is firmly snapped into the electronics assembly **2102**, the sensor assembly gripper **2106** is retracted with an amount of force that overcomes its grip. Such an approach offers simplicity by reducing the number of parts required (given that the snap features may be incorporated in the sharp hub/boss).

Electrical Connections Details

[0124] The selection of various hardware options from the above alternative embodiments will depend, at least in part, on the sensor assembly configuration. Sensor assembly configuration, in turn, depends on the mechanism selected for establishing electrical contact between the sensor assembly and the electronics assembly, as well as the method used to seal the contacts. A number of advantageous alternative embodiments are illustrated in FIGS. **22** through **48**.

[0125] A first example is presented in FIG. **22**. Here a sensor **2202** is provided with an elongate "tail" section. The distal portion of the tail is to be inserted through the skin surface guided by a sharp. The proximal portion of the sensor **2202** includes a "flag" type connector region. Three carbon-doped (for conductivity) silicone electrical connectors **2204** are provided to interface with the electrical contacts of the sensor **2202**. A split "V" portion of each connector **2204** receives the electrical contacts of the sensor **2202**. A flexible nubbin on the opposite side of each connector **2204** is provided for electrical contact with the circuit board incorporated in the electronics assembly. When inserted in a housing **2210**, the sensor **2202** and the connector **2204** are advantageously sealed, encased or potted with an adhesive. Epoxy, a UV cure or another type of dielectric (non-conductive) compound may be used. Generally, the compound selected is of such viscosity that it is able to flow around features and fully seal the sensor **2202** within its housing **2210** to avoid leakage. Such an approach avoids contamination and/or current leakage due to fluid intrusion. FIGS. **23**A and **23**B are perspective assembly and final-assembly cross-sectional views, respectively of the sensor components of FIG. **22**. The tail of the sensor **2202** is supported within the sharp **2206** and the sharp **2206** extends through the connector housing **2210**. The electrical contacts of the sensor **2202** are seated in the connector **2204** and the assembly is sealed within the housing **2210** including the housing top **2208**.

[0126] FIGS. **24**A and **24**B are top and bottom perspective views, respectively of circuit board components to be used with the sensor assembly **2300** of FIGS. **23**A and **23**B. In each, a custom printed circuit board (PCB) **2402** is shown. The PCB **2402** includes a battery **2406** with mount **2408**, an application specific integrated circuit (ASIC) **2410**, or other appropriate processing unit, and various other circuitry, including a thermocouple. On its face, the PCB **2402** includes a housing **2404** with snap features for receiving the sensor assembly **2300** of FIGS. **23**A and **23**B. On the reverse side of the PCB **2402**, heat stakes **2412** show the mode of attaching the housing **2404**.

[0127] Turning to FIGS. **25**A and **25**B, in some embodiments, the on-body device **2502** is formed by over molding with a polymer "macromelt" (e.g., a thermoplastic hot-melt based on polyamide) or other compound and then affixing an adhesive patch with a releasable liner thereto. A completed on-body device **2502** is provided once fitted with a complimentary sensor assembly **2300**, as illustrated in FIGS. **25**A and **25**B. Internal to such assembly, it may be desirable to include a seal or gasket **2604** as shown in assembly view FIG. **26**. As shown in cross section, in FIG. **27**A, and magnified in FIG. **27**B, the gasket **2604** advantageously includes discrete ring/rim elements to compress and ensure sealing in critical areas, including around each circuit connection/nubbin.

[0128] FIGS. **28**A-**28**F illustrate another advantageous sensor **2802** and sensor mount or connector **2804** arrangement. This embodiment resembles the previous approach, but

is configured with a bend and a curve imparted to the sensor connection "flag." This permits package and sealing within in a roughly triangular envelope to shorten the length of the connector. Doing so results in a generally more compact sensor assembly body and the ability to downsize all associated components. Yet, it does not significantly complicate manufacture. FIG. **28**A depicts the sensor **2802** before it is shaped to fit within the connector **2804**. FIG. **28**B depicts the bent and curved sensor connection "flag." FIG. **28**C depicts the relative orientation of the sensor **2802** as it is inserted into the connector **2804**. FIG. **28**D depicts a wedge **2806** that is press-fit into the connector **2804** to retain the sensor **2802** and press the connector's electrical contacts against the electrical contacts of the sensor **2802**. FIG. **28**E depicts the relative orientation of the sharp **2808** as it is inserted into the connector **2804** and FIG. **28**F depicts the completed sensor assembly including potting **2810** (e.g., UV potting) used to seal the electrical contacts.

[0129] An alternative embodiment is contemplated in connection with the sensor approach illustrated in FIGS. **29**A-**29**D. Using a sensor **2902** with a vertically disposed "flag" connector portion that is supported by coupling **2904**, coupling **2904** is configured to snap into connector block **2908** which is attached to PCB **2914**. Connector block **2908** includes a connector socket **2910** to receive the contacts portion of the sensor **2902**. Connector block **2908** also includes a coupling feature **2912** to receive snap-fit tab **2906** on the coupling **2904** which retains the sensor **2902** in the connector socket **2910**.

[0130] Another alternative embodiment is contemplated in connection with the sensor approach illustrated in FIGS. **30**A-**30**C. Here, a design is provided that eliminates a connection element and the need for separate spring contacts (be they metal or elastomeric as above). In addition, the approach offers the advantage of effectively converting a sensor with contacts on two sides into a sensor with contacts on a single side after folding. The sensor **3004** shown in FIG. **30**A initially has two electrical contacts facing a first direction on the split contact area and one contact facing in a second, opposite direction (obscured by the view). When folded and optionally clamped, glued or otherwise affixed in the orientation shown in FIG. **30**B, all of the electrical contacts lie in a single plane, facing the same direction (e.g., downward in the drawing). Set within a housing (not shown) to restrain and/or seal the sensor **3004**, the sensor **3004** is coupled to electrical contacts on the PCB **3002** as shown in FIG. **30**C.

[0131] Such an approach in some embodiments includes a thinner (e.g., lower profile) on-body device relative to the on-body device **3102** variation shown in FIG. **31**. The reduced thickness dimension is represented by height H. In FIG. **31**, a flag type sensor is shown in a housing with separate electrical connectors. The "stack height" in FIG. **31** includes these connectors as well as the housing. The approach shown in FIG. **30** enables eliminating the connector height above the sensor **3004**. Thus, elements are eliminated without losing functionality. Moreover, the elimination of parts reduces cost, and impedance (relative at least to the inclusion of elastomeric connectors as shown in FIG. **22**, etc.) between the sensor **3004** and the PCB. Another useful aspect is allowing a sensor with contacts on two sides to connect to the PCB without requiring vias or holes in the sensor, thereby helping with sealing considerations and ease of electrical connection.

[0132] FIGS. **32**A and **32**B illustrate two additional sensor configurations. In these embodiments, sensors **3202**, **3212** with contacts on two sides are split and bent in opposite directions to orient the electrical contacts **3204**, **3214** onto a single face or plane. As above, orienting the electrical contacts **3204**, **3214** onto a single plane facilitates ease of sealing the electrical connections. Moreover, overall sensor assembly height can be reduced relative to other approaches. Any of conductive adhesives, conductive films and/or mechanical contacts may be used to electrically connect with the sensor contacts so arranged.

[0133] FIGS. **33**A-**33**G depict a low-profile multilayer sensor configuration with the electrical contacts all on one side and some details of its construction. FIGS. **33**A and **33**B illustrate the two sides of this embodiment of a sensor **3300** and its overall shape. The example sensor **3300** includes a tail portion **3302** that is initially supported by a sharp and then disposed within the user's interstitial fluid or dermal space below the skin upon application of the on-body device. The tail portion **3302** includes electrodes **3304**, **3306**, **3308** that are used to contact the interstitial fluid and to sense (e.g., transmit and receive) the electrical signals used to measure the analyte concentration within the interstitial fluid. The sensor **3300** also includes an electrical contacts portion **3310** which includes electrical contacts **3312**, **3314**, **3316** that are disposed all on one side of the sensor **3300** and are in electrical communication with the electrodes **3304**, **3306**, **3308** via conductive traces (not visible in FIGS. **33**A and **33**B but see FIG. **33**F). Note also that the electrical contacts portion **3310** is shaped to facilitate being securely held and sealed into a connector support that will be described below. For example, the electrical contacts portion **3310** includes securement features that hold the sensor to be secured to the connector support by friction fit, interference fit, etc., herein shown as tabs **3310**A and notches **3310**B that allow the electrical contacts portion **3310** to be held securely in the connector support which includes mating features.

[0134] The sensor **3300** also includes a bendable portion **3318** that allows the electrical contacts portion **3310** to be arranged parallel to the circuit board of the electronics assembly to facilitate a relatively flat or low profile within the electronics assembly. The bendable portion **3318** also allows the tail portion **3302** to extend down from the electronics assembly so that it can be inserted below the skin of the user while the electrical contacts portion **3310** lays parallel to the circuit board. Lastly, the sensor **3300** includes an armature portion **3320** that allows the sensor **3300** to be held securely to the connector support of the sensor assembly. The armature portion **3320** also provides a leverage point to apply a biasing force to compel the tail portion **3302** into a channel of the sharp as described below in FIG. **35**D and the associated text.

[0135] FIG. **33**C depicts a side view of the sensor **3300**. The encircled portion labeled D is shown in more detail in FIG. **33**D. FIG. **33**D provides a magnified side view of the distal most part of the tail portion **3302** of the sensor **3300**. The encircled portion labeled E is shown in more detail in FIG. **33**E. FIG. **33**E provides an even further magnified view of the electrodes **3304**, **3306**, **3308** of the tail portion **3302**. As can be seen in FIG. **33**E, the electrodes **3304**, **3306**, **3308** are formed as layers on a substrate **3322**. The substrate **3322** is made of a flexible, non-conductive dielectric material. In some embodiments, a clear, high-gloss, heat stabilized polyester film may be used for the substrate **3322** and conductive carbon ink can be used to create the trace layers used for the electrodes **3304**, **3306**, **3308**. In other embodiments, other materials may be used for the substrate **3322** such as poly-

meric or plastic materials and ceramic materials and for the trace layers such as carbon or gold.

[0136] Dielectric layers **3324**, **3326**, **3328** are disposed between and upon the electrodes **3304**, **3306**, **3308** to insulate the electrodes **3304**, **3306**, **3308** from each other. In some embodiments, an ultraviolet (UV) light curable dielectric material may be used for the dielectric layers **3324**, **3326**, **3328**. In other embodiments, other practicable materials may be used. In the particular example embodiment shown, electrode **3304** is a counter electrode, electrode **3306** is a working electrode, and electrode **3308** is a reference electrode. Note that reference electrode **3308** also includes a secondary conductive layer **3330**, e.g., an Ag/AgCl layer. In certain embodiments, the lateral surface of the secondary conducive layer **3330** is covered by a dielectric layer **3328** resulting in only the side edges the secondary conductive layer **3330**, which extend along the side edges of the substrate **3322**, being uncovered by dielectric layer **3328** and, as such, are exposed to the environment when in operative use. In such embodiments, dielectric layer **3328** covers the entire lateral surface of the secondary conducive layer **3330**, i.e., 100% of the lateral surface of the secondary conducive layer **3330** is covered by dielectric layer **3328**. As such, dielectric layer **3328** has at least the same lateral width and at least the same length as conductive layer **3330**.

[0137] Further details of the arrangement, dimensions, chemistry, and manufacturing methods of the sensor **3300** may be found in U.S. patent application Ser. No. 13/526,136, entitled "Connectors For Making Connections Between Analyte Sensors And Other Devices," which was filed Jun. 18, 2012, and which is incorporated by reference herein in its entirety and for all purposes.

[0138] FIG. **33**F depicts a view of the sensor **3300** of FIGS. **33**A and **33**B including hidden lines representing different layers of electrically conductive trace lines **3332**, **3334**, **3336** connecting the electrical contacts **3312**, **3314**, **3316** to the electrodes **3304**, **3306**, **3308**. The electrical contacts **3314**, **3316** for the electrodes on the opposite side of the sensor **3300** are coupled to the respective conductive traces **3334**, **3336** using vias **3338**, **3340** (only two labeled). FIG. **33**G is a cross-sectional view of the sensor **3300** taken along line GG of FIG. **33**F. As can be seen, conductive trace **3332** covered by dielectric layer **3324** is on one side of the substrate **3322** while conductive traces **3334**, **3336** separated by dielectric layer **3326** and covered by dielectric layer **3328** is on the opposite side on the substrate **3322**. The electrical contacts **3314**, **3316** are accessible via openings in the dielectric layer **3328**.

[0139] FIGS. **33**H to **33**J depict three alternative sensor designs **3342**, **3344**, **3300** side by side for comparison. Notably sensor **3342** includes an aperture **3346** to receive a rivet or other fastener for physical attachment to the PCB of the electronics assembly. Details of sensor **3342** are provided in previously incorporated U.S. patent application Ser. No. 13/526,136, entitled "Connectors For Making Connections Between Analyte Sensors And Other Devices," which was filed Jun. 18, 2012. Sensors **3344** and **3300** are suitable for use with the alternative connector arrangements described below with respect to FIGS. **34**A-**35**D.

[0140] Turning now to FIGS. **34**A-**35**D, an alternative connector arrangement for connecting a circuit board to a sensor **3300** such as depicted in FIGS. **33**A, **33**B, and **33**J is described. As shown in FIG. **34**A, a flexible one-piece seal or connector **3402** is molded in silicone or other practicable elastic material. Separate doped silicone conductive elements are set therein which provide electrical contacts **3410** for connection to a circuit board. In some embodiments, the conductive elements can alternatively be over molded or insert-molded into place. The result is a generally malleable/flexible hybrid connection and sealing unit or connector **3402** incorporating a living hinge joining two (as-shown) symmetrical sections. Alternatively, a two-piece design is possible. Yet, with the unitary design, the arrangement can be neatly secured using a single catch boss or post **3412** opposite the hinged section. In some embodiments, two or more posts can be used to secure the connector **3402** folded around and sealing both sides of the contacts portion of the sensor **3300**. Thus, even if a dielectric coating on the sensor **3300** fails (e.g., pinhole leaks), the connector **3402** insures that the sensor contacts **3312**, **3314**, **3316** are protected from moisture or any contaminants. The one-piece design also facilitates assembly as illustrated, in which the flexible connector **3402** is set in a rigid or semi-rigid housing or connector support **3404** with one side located on the post **3412**. Then a sensor **3300** is inserted, and bent approximately ninety degrees at the bendable portion **3318** of the sensor **3300**. Once bent, the sensor **3300** is then captured with the upper part of the connector **3402** by folding over the connector **3402** as indicated by arrow S in FIG. **34**C. The connector **3402** is illustrated as bilaterally symmetrical, however, the connector **3402** can be formed in a direction-specific orientation because in some embodiments, certain of the electrical contacts **3410** may not be necessary. In some embodiments, all the sensor's electrical contacts **3312**, **3314**, **3316** can be provided on a single side of the sensor **3300** or, in other embodiments, both sides of the sensor **3300**.

[0141] As shown in FIG. **34**D, in some embodiments, the top surface of the connector **3402** includes a raised lip **3418** disposed at the top surface edge of the connector **3402** that encircles the electrical contacts **3410** of the connector **3402**. The raised lip **3418** can be integrally formed in the elastomeric material that forms the connector **3402** and is thus compressible when the sensor assembly is inserted into the electronics assembly. Alternatively, the raised lip can be embodied as gasket or o-ring on the top surface of the connector **3402**. The raised lip **3418** functions to ensure that a seal is formed around the electrical contacts **3410** of the connector **3402** and the electrical contacts of the PCB before any electrical connectivity between the sensor and the electronics assembly is established. Thus, the raised lip **3418** provides a failsafe against a short by insuring the order of assembly includes creating a seal and then creating electrical connectivity as the sensor assembly is mated with the electronics assembly.

[0142] In any case, with the sensor **3300** captured within the seal **3402**, a sharp **3408** is then introduced, with its hub **3414** contacting the connector support **3404** as shown in FIG. **34**D. FIG. **35**A illustrates the orientation of the sharp **3408** prior to the insertion of the sharp **3408** into the connector support **3404**. FIGS. **35**B and **35**C provide a cross-sectional overview of the relationship of the sharp **3408** to the sensor **3300**. Notably, once inserted in the connector support **3404**, the sharp **3408** surrounds and supports the tail portion **3302** of the sensor **3300**. In FIG. **35**D, further details of the sensor configuration are visible. Particularly, biasing features are shown that abut surfaces of the connector support **3404** in order to center and bias the sensor **3300** into the channel of the sharp **3408**. Specifically, armature portion **3320** abuts the surface at arrow **3502** of the connector support **3404** which

causes the biasing feature **3508** to act as a fulcrum at arrow **3504** to push the tail portion **3302** of the sensor **3300** into the sharp **3408** at arrow **3506**.

[0143] In some embodiments, the curved section **3508** of the sensor **3300** can overlie a corresponding surface of the connector support **3404** to help limit the insertion depth (i.e., provide a depth stop) for the sensor **3300**. Sensor **3300** vertical placement, including insertion depth, is also controlled based on the relationship between the seal **3402** halves. As noted with respect to the other sensor assembly housings/supports discussed herein, the sensor assembly of FIG. **35**C can also include various clip or snap features for its precise associations with a socket in the electronics assembly within the on-body device.

[0144] A related arrangement to that described in connection with FIGS. **34**A-**34**D and **35**A-**35**D is presented in FIGS. **36** to **38**. In FIG. **36**, a sensor **3300** with all electrical contacts on the same side is shown with a sharp **3602** for insertion in a connector support **3604**. The connector support **3604** includes an elastomeric (e.g., silicone) seal backing. Once such a sensor assembly set is in a container (or alternatively in an applicator), the sensor assembly can be coupled to the sensor electronics to form an on-body device **222**. As shown in FIG. **37**, the sensor assembly **3702** is shaped to fit within a socket **3704** that includes a second elastomeric unit with electrical contacts in the elastomer body of the socket **3704**. Note that in FIG. **37**, the enclosure of the electronics assembly is not shown so that the socket can be more clearly displayed. The socket **3704** is affixed to a circuit board **3706** via any practicable method. The socket **3704** and/or the connector support **3604** can include various coupling features (e.g., a snap fit lip and hook arrangement) to ensure that the electrical contacts are pressed tightly together and sealed within the socket **3704** and sensor assembly **3702**. Once the sensor assembly **3702** is received within the socket **3704**, the on-body device (e.g., with the complete over-mold enclosure around the circuit board **3706** and adhesive patch **3802** as shown in FIG. **38**) is ready for use.

[0145] The electrical contacts/connector approaches described above are "directional." In other words, before the sensor assembly is mated with the electronics assembly, the two are aligned relative to each other both longitudinally and rotationally. In some embodiments, the coupling arrangement is "non-directional" and the sensor assembly can be mated with the electronics assembly without aligning the two rotationally. For example, the sensor assembly construction shown in FIGS. **39**A and **39**B offers such an approach. Separate conductive (e.g., optionally metal) bands **3904** mounted on a core support **3906** connect to sensor electrical contacts **3908** as shown in FIGS. **39**A and **39**B. The assembled unit (i.e., the sensor assembly **3910**), with sharp **3902** in place, is received in the socket of an electronics assembly **4002** to form an on-body device as illustrated in FIG. **40**. In some embodiments, brush-type connectors **4004** on the circuit board in the electronics assembly **4002** reach up to the individual levels of the conductive bands **3904**. Such a sensor assembly **3910** can be inserted into the socket of the electronics assembly **4002** in any radial/rotational orientation.

[0146] A "reversed" approach is illustrated in the sensor assembly **4100** of FIGS. **41**A-**41**C. Here, the circuit board **4102** includes a socket connector **4104** that has an arrangement of stacked conductive elastomeric O-rings **4106** disposed within the inner diameter of the socket connector **4104**. A sensor support **4108** is adapted to hold the electrical contacts **4110** of the sensor **4112** in a corresponding stack facing radially outward. When the sensor support **4108** is inserted into the socket connector **4104**, the conductive elastomeric O-rings **4106** align vertically with the electrical contacts of the sensor as shown in FIG. **41**B (with the socket connector **4104** not shown so that the conductive elastomeric O-rings **4106** are more clearly visible) and in the cross-sectional view of FIG. **41**C. In some embodiments, the electrical contacts **4110** of the sensor **4112** can be formed by rolling up a sensor with contacts all on the same side or using the oppositely directed folding/rolling approach shown in connection with FIG. **40**—but oriented vertically. Other approaches may be utilized as well. In any case, the electrical contacts of the sensor subtend less than 360 degrees while the conductive elastomeric O-rings on the circuit board provide a multi-level encircling relationship. As with the approach associated with FIGS. **39**A to **40**, such a sensor assembly **4100** can be inserted into the socket connector **4104** of the electronics assembly **4102** in any radial/rotational orientation.

[0147] The sensor connections associated with the circuit board **4404** in the embodiment shown in FIGS. **42** to **44** are arranged in concentric rings. The sensor **4202** includes electrical contacts **4204** held within housing member **4206** and base **4208**. The electrical contacts **4204** include "microspring" wireform connectors. These springs provide compliance as well as a discrete top loop. Each electrical contact **4204** is disposed at a different radial distance from the center corresponding to a different concentric conductive track **4304** on a circuit board coupling **4302**. Thus, no matter the rotational orientation of the sensor assembly **4200** relative to the circuit board coupling **4302**, the electrical contacts **4204** of the sensor **4202** align with the correct concentric conductive tracks **4304**. Very fine wire can be used for the springs, thus producing an easily miniaturized system.

[0148] Turning now to FIGS. **45**A and **45**B, another non-directional sensor assembly connection approach that can be employed with a concentric electronics assembly connection is depicted. As illustrated in the isometric top and bottom views of FIGS. **45**A and **45**B, a sensor **4504** bent approximately ninety degrees with contacts positioned along different radial paths or arcs, connects with conductive elastomeric contacts **4508** supported by two opposing discs **4502**, **4506**. Two of the elastomeric contacts **4508** are set on one disc **4506**, and a third, configured to pass through a sensor via, is set on the other disc **4502**. As shown in FIG. **46**A, this sensor assembly **4500** can then be received by a circuit board coupling **4604** which includes concentric tracks for connecting the radially disposed conductive elastomeric contacts **4508** of the sensor assembly **4500** to the circuit board **4606**. The enclosure **4608** snap fits or is otherwise adhered to (e.g., using adhesive/welding) a base supporting the circuit board **4606**. The as-assembled on-body device **4600** is depicted in FIG. **46**B.

[0149] Turning now to FIGS. **47**A to **47**C, an alternative sensor assembly/electronics assembly connection approach is illustrated. As shown, the sensor assembly **4702** includes sensor **4704**, connector support **4706**, and sharp **4708**. Notably, sensor assembly **4702** does not include a separate connector or seal to enclose the sensor's connectors within the connector support **4706** as in the embodiment depicted in FIGS. **34**A to **34**D (i.e., no seal **3402**). Instead, a recess **4710** formed directly in the enclosure of the electronics assembly **4712** includes an elastomeric sealing member **4714** (including conductive material coupled to the circuit board and

aligned with the electrical contacts of the sensor **4704**). Thus, when the sensor assembly **4702** is snap fit or otherwise adhered to the electronics assembly **4712** by driving the sensor assembly **4702** into the integrally formed recess **4710** in the electronics assembly **4712**, the on-body device **4714** depicted in FIG. **47**C is formed. This embodiment provides an integrated connector for the sensor assembly **4702** within the electronics assembly **4712**.

On-Body Device Construction Details

[0150] Certain elements of the on-body device fabrication may apply to any or all of the above electrical connection configurations. FIGS. **48**A-**48**D provide top (FIG. **48**A) and bottom (FIG. **48**B-**48**D) construction views of an exemplary on-body device subassembly. A socket **4802** or mount is fit through vias in a printed circuit board **4800** along with other associated components including a processor **4804** (e.g., an ASIC including a communications facility), thermistor/thermocouple **4806**, a battery mount **4808**, etc. Once the circuit board **4800** has been populated with these components as shown in FIG. **48**C, the socket **4802** is adhered to the circuit board **4800** (e.g., using heat stakes). Once a battery **4810** is set in place, the circuit board **4800** as shown in FIG. **48**E is prepared for incorporation into an on-body device.

[0151] The circuit board **4800** is ready for an over-mold process or other sealing method. As illustrated in FIGS. **49**A-**49**D, the circuit board **4800** is first set in the two-piece mold **4902**, **4904**. With the mold slide **4906** inserted and mold **4902**, **4904** closed as shown in FIG. **49**B. As depicted in FIG. **49**C, a thermoplastic material is injected into the mold **4902**, **4904**, encasing the circuit board **4800**. The mold **4902**, **4904** is opened and the near-final part ejected as shown in FIG. **49**D.

[0152] Alternatively, the enclosure of the electronics assembly of the on-body device **222** may include elements snap-fit (or welded/adhered) together as illustrated in the assembly view of FIG. **50**A, the as-assembled view of FIG. **50**B, and in cross-sectional perspective view of FIG. **50**C. An enclosure including a top shell **5002** and a mounting base **5004** can be used to sealably enclose and protect the circuit board **4800**. When snap-fit, various interference or snap fit elements (e.g., annular rims **5006**) may be provided around the entirety of the periphery of the enclosure or as discrete snap-fit connectors (not shown). Notably, such an approach may benefit from additional O-ring sealing elements to avoid fluid intrusion. Alternatively or additionally, adhesive set at the snap junction(s) may be used to ensure good sealing, especially in connection with continuous annular snap-fit features **5006**. As seen in FIG. **50**C, a trough **5008** or other features can be provided to insure that adhesive **5010** that may be squeezed out during assembly is not forced into areas that could interfere with operation or assembly of the on-body device **222**. In some embodiments, when the a top shell **5002** and a mounting base **5004** are fit together with a bead of adhesive **5010** in place as shown, the trough **5008** not only provides space to capture the adhesive **5010** squeezed out but also provides additional surface area for a thicker layer of adhesive **5010** to seal the joint.

[0153] However constructed, final assembly of the electronics assembly of on-body device **222** involves adhesive patch installation. An exemplary approach is illustrated in FIGS. **51**A-**51**C. First, a double-sided adhesive patch **5104** has the inner liner **5102** removed. This exposed adhesive is set over the on-body device body **5106** (with the temperature sensor **4806** folded to seat within a complimentary pocket) and adhered with a first window **5108** aligned for temperature sensing and second window **5110** for sensor assembly receipt. As such, it is ready for placement in an applicator assembly upon removal of the outer release liner, or alternatively ready for placement in a container with or without the outer liner in place, depending on the presence or absence of any liner-puller features provided therein.

[0154] Various other modifications and alterations in the structure and method of operation of the embodiments of the present disclosure will be apparent to those skilled in the art without departing from the scope and spirit of the present disclosure. Although the present disclosure has been described in connection with certain embodiments, it should be understood that the present disclosure as claimed should not be unduly limited to such embodiments. It is intended that the following claims define the scope of the present disclosure and that structures and methods within the scope of these claims and their equivalents be covered thereby.

What is claimed is:

1. An apparatus comprising:

a first assembly including a portion of an on-body device;

a second assembly coupleable to the first assembly to form the on-body device and a sharp supporting a sensor of the on-body device;

an applicator assembly releasably coupled to the first assembly; and

a container releasably coupled to the second assembly,

wherein in response to force applied to the applicator assembly along a longitudinal axis that drives the applicator assembly into the container, the applicator assembly releases and retrieves the second assembly from the container and couples the first assembly to the second assembly to form the on-body device releasably held within the applicator assembly, and

wherein the on-body device once held within the applicator assembly is ready to be applied.

2. The apparatus of claim **1** wherein in response to a force applied to the applicator assembly along the longitudinal axis with the applicator assembly loaded with the on-body device and held against a user, the applicator assembly collapses along the longitudinal axis, drives the sharp supporting the sensor of the on-body device through skin of the user in a direction along the longitudinal axis, releases the on-body device from the applicator assembly upon the applicator assembly reaching a fully collapsed position, adheres the on-body device to the skin of the user, and retracts the sharp into the applicator assembly leaving the sensor in the user.

3. The apparatus of claim **2** wherein the applicator assembly includes an isolated inner space defined by an enclosure and a carrier of the first assembly, and wherein the sharp is entirely contained in the inner space when retracted into the applicator assembly.

4. The apparatus of claim **1** wherein the first assembly is an electronics assembly including sensor electronics and an enclosure surrounding the sensor electronics, the sensor electronics including a processor and a communications facility; and

wherein the second assembly is a sensor assembly including a sensor, a sharp supporting the sensor, a support structure, and a connector coupled to the sensor and coupleable to the sensor electronics, the support structure supporting the connector and sensor, and releasably supporting the sharp.

5. The apparatus of claim **1** wherein the second assembly is an electronics assembly including sensor electronics and an enclosure surrounding the sensor electronics, the sensor electronics including a processor and a communications facility; and

wherein the first assembly is a sensor assembly including a sensor, a sharp supporting the sensor, a support structure, and a connector coupled to the sensor and coupleable to the sensor electronics, the support structure supporting the connector and sensor, and releasably supporting the sharp.

6. An apparatus comprising:

an electronics assembly including sensor electronics;

a sensor assembly including a sensor coupleable to the sensor electronics;

an applicator assembly releasably coupled to the electronics assembly; and

a container releasably coupled to the sensor assembly,

wherein in response to force applied to the applicator assembly along a longitudinal axis that drives the applicator assembly into the container, the applicator assembly releases and retrieves the sensor assembly from the container and couples the electronics assembly to the sensor assembly to form an on-body device releasably held within the applicator assembly, and

wherein the on-body device once held within the applicator assembly is ready to be applied.

7. The apparatus of claim **6** wherein in response to a force applied to the applicator assembly along the longitudinal axis with the applicator assembly loaded with the on-body device and held against a user, the applicator assembly is enabled to collapse along the longitudinal axis, drive a sharp supporting the sensor of the on-body device through skin of the user in a direction along the longitudinal axis, release the on-body device from the applicator assembly upon the applicator assembly reaching a fully collapsed position, adhere the on-body device to the skin of the user, and retract the sharp into the applicator assembly leaving the sensor in the user.

8. The apparatus of claim **7** wherein the applicator assembly includes an isolated inner space defined by an enclosure and a carrier of the electronics assembly, and wherein the sharp is entirely contained in the inner space when retracted into the applicator assembly.

9. The apparatus of claim **6** wherein the container further includes a platform disposed to protect and releasably retain the sensor assembly in the container and operative to translate between an initial position and a recessed position.

10. The apparatus of claim **9** wherein the platform is lockable in the initial position and is operable to be unlocked by the applicator assembly, to translate to the recessed position in response to the force applied to the applicator assembly along the longitudinal axis that drives the extended, locked applicator assembly into the container, and to release the sensor assembly upon reaching the recessed position.

11. The apparatus of claim **9** wherein the platform includes a sensor assembly guide feature operative to direct the sensor assembly into the electronics assembly independent of an overall orientation of the apparatus.

12. The apparatus of claim **7** wherein the sensor disposed within a support structure includes a biasing feature operative to bias the sensor into the sharp while the sharp and the sensor are driven through the skin of the user.

13. The apparatus of claim **6** wherein the sensor electronics include at least one electronic contact and the sensor assembly includes a support structure that includes a compression feature operative to compress and seal a connector of the sensor assembly to the at least one electronic contact.

14. The apparatus of claim **6** wherein the container includes guide features to control movement of the applicator assembly into the container and a detent feature which provides an amount of resistance to the force applied to the applicator assembly along the longitudinal axis that drives the applicator assembly into the container to insure that once overcome, the sensor assembly is driven into and seated in the electronics assembly by a resulting translation of the electronics assembly in the applicator assembly.

15. The apparatus of claim **7** wherein the applicator assembly includes guide features to allow the applicator assembly to collapse along the longitudinal axis and a detent feature which provides an amount of resistance to the force applied to the applicator assembly along the longitudinal axis with the applicator assembly held against a user to insure that once overcome, the sharp and sensor are driven into the user by a resulting translation of the on-body device in the applicator assembly.

16. The apparatus of claim **6** wherein the electronics assembly includes an adhesive patch for adhering the assembled on-body device to the skin of the user, the electronics assembly is sterilized using a first method, the sensor assembly is sterilized using a second method, the electronics assembly and adhesive patch are incompatible with the second method of sterilization, and the sensor assembly is incompatible with the first method of sterilization.

17. An apparatus comprising:

an electronics assembly including sensor electronics;

a sensor assembly including a sensor coupleable to the sensor electronics;

an applicator assembly releasably coupled to the electronics assembly, the applicator assembly being lockable in an extended position and collapsible along a longitudinal axis of the applicator assembly to a retracted position when unlocked; and

a container releasably coupled to the sensor assembly and including an applicator assembly unlock feature disposed to unlock the applicator assembly,

wherein in response to force applied to the applicator assembly along the longitudinal axis that drives the extended, locked applicator assembly into the container, the applicator assembly releases and retrieves the sensor assembly from the container, couples the electronics assembly to the sensor assembly to form an on-body device releasably held within the applicator assembly, and unlocks the applicator assembly.

18. The apparatus of claim **17** wherein in response to a force applied to the applicator assembly along the longitudinal axis with the extended, unlocked applicator assembly held against a user, the applicator assembly is enabled to collapse along the longitudinal axis to the retracted position, drive a sharp supporting the sensor of the on-body device through skin of the user in a direction along the longitudinal axis, release the on-body device from the applicator assembly upon the applicator assembly reaching the retracted position, adhere the on-body device to the skin of the user, and retract the sharp into the applicator assembly leaving the sensor in the user.

19. The apparatus of claim **18** wherein the applicator assembly includes an isolated inner space defined by an enclosure and a carrier of the electronics assembly, and

wherein the sharp is entirely contained in the inner space when retracted into the applicator assembly.

20. The apparatus of claim **17** wherein the container further includes a platform disposed to protect and releasably retain the sensor assembly in the container and operative to translate between an initial position and a compressed position.

21. The apparatus of claim **20** wherein the platform is lockable in the initial position and is operable to be unlocked by the applicator assembly, to translate to the compressed position in response to the force applied to the applicator assembly along the longitudinal axis that drives the extended, locked applicator assembly into the container, and to release the sensor assembly upon reaching the compressed position.

22. The apparatus of claim **20** wherein the platform includes a sensor assembly guide feature operative to direct the sensor assembly into the electronics assembly independent of an overall orientation of the apparatus.

23. The apparatus of claim **18** wherein the sensor disposed within a support structure includes a biasing feature operative to bias the sensor into the sharp while the sharp and the sensor are driven through the skin of the user.

24. The apparatus of claim **17** wherein the sensor electronics include at least one electronic contact and the sensor assembly includes a support structure that includes a compression feature operative to compress and seal a connector of the sensor assembly to the at least one electronic contact.

25. The apparatus of claim **17** wherein the container includes guide features to control movement of the applicator assembly into the container and a detent feature which provides an amount of resistance to the force applied to the locked applicator assembly along the longitudinal axis that drives the locked applicator assembly into the container to insure that once overcome, the sensor assembly is driven into and seated in the electronics assembly by a resulting translation of the electronics assembly in the applicator assembly and that the applicator assembly is unlocked by the applicator assembly unlock feature in the container.

26. The apparatus of claim **18** wherein the applicator assembly includes guide features to allow the unlocked applicator assembly to collapse along the longitudinal axis and a detent feature which provides an amount of resistance to the force applied to the applicator assembly along the longitudinal axis with the unlocked applicator assembly held against a user to insure that once overcome, the sharp and sensor are driven into the user by a resulting translation of the on-body device in the applicator assembly.

27. The apparatus of claim **17** wherein the electronics assembly is sterilized using a first method, the sensor assembly is sterilized using a second method, the electronics assembly is incompatible with the second method of sterilization, and the sensor assembly is incompatible with the first method of sterilization.

28. An apparatus comprising:

an electronics assembly including sensor electronics;

a sensor assembly including a sensor coupleable to the sensor electronics;

an applicator assembly releasably coupled to the electronics assembly and including a guide sleeve lockable in an extended position and translatable along a longitudinal axis of the applicator assembly to a retracted position when unlocked; and

a container releasably coupled to the sensor assembly and including a guide sleeve unlock feature disposed to unlock the guide sleeve of the applicator assembly,

wherein in response to force applied to the applicator assembly along the longitudinal axis that drives the extended, locked guide sleeve into the container, the applicator assembly releases and retrieves the sensor assembly from the container, couples the electronics assembly to the sensor assembly to form an on-body device releasably held within the applicator assembly, and unlocks the guide sleeve.

29. The apparatus of claim **28** wherein in response to a force applied to the applicator assembly along the longitudinal axis with the extended, unlocked guide sleeve held against a user, the applicator assembly enables the extended, unlocked guide sleeve to translate along the longitudinal axis to the retracted position, drive a sharp supporting the sensor of the on-body device through skin of the user in a direction along the longitudinal axis, release the on-body device from the applicator assembly upon the guide sleeve reaching the retracted position, adhere the on-body device to the skin of the user, and retract the sharp into the applicator assembly leaving the sensor in the user.

30. The apparatus of claim **28** wherein the container further includes a platform disposed to protect and releasably retain the sensor assembly in the container and operative to translate between an initial position and a compressed position.

31. The apparatus of claim **30** wherein the platform is lockable in the initial position and is operable to be unlocked by the guide sleeve of the applicator assembly, to translate to the compressed position in response to the force applied to the applicator assembly along the longitudinal axis that drives the extended, locked guide sleeve into the container, and to release the sensor assembly upon reaching the compressed position.

32. The apparatus of claim **30** wherein the platform includes a sensor assembly guide feature operative to direct the sensor assembly into the electronics assembly independent of an overall orientation of the apparatus.

33. The apparatus of claim **29** wherein the sensor disposed within the support structure includes a biasing feature operative to bias the sensor into the sharp while the sharp and the sensor are driven through the skin of the user.

34. The apparatus of claim **28** wherein the sensor electronics include at least one electronic contact and the support structure includes a compression feature operative to compress and seal the connector to the at least one electronic contact.

35. The apparatus of claim **28** wherein the container includes guide features to control translation of the guide sleeve and a detent feature which provides an amount of resistance to the force applied to the applicator assembly along the longitudinal axis that drives the extended, locked guide sleeve into the container to insure that once overcome, the sensor assembly is driven into and seated in the electronics assembly by a resulting translation of the electronics assembly in the applicator assembly.

36. The apparatus of claim **29** wherein the applicator assembly includes guide features to allow the guide sleeve to translate into the applicator assembly and a detent feature which provides an amount of resistance to the force applied to the applicator assembly along the longitudinal axis with the extended, unlocked guide sleeve held against a user to insure that once overcome, the sharp and sensor are driven into the user by a resulting translation of the on-body device in the applicator assembly.

37. The apparatus of claim **28** wherein the electronics assembly is sterilized using a first method, the sensor assembly is sterilized using a second method, the electronics assembly is incompatible with the second method of sterilization, and the sensor assembly is incompatible with the first method of sterilization.

38. An on-body device comprising:

an electronics assembly including sensor electronics and an enclosure surrounding the sensor electronics, the sensor electronics including a processor and a communications facility; and

a sensor assembly including a sensor, a sharp supporting the sensor, a support structure, and a connector coupled to the sensor and coupleable to the sensor electronics, the support structure supporting the connector and sensor, and releasably supporting the sharp,

wherein the electronics assembly is releasably coupleable to an applicator assembly that includes a guide sleeve lockable in an extended position and operative to translate along a longitudinal axis of the applicator assembly to a retracted position when unlocked, the guide sleeve including an electronics assembly decouple feature disposed to release the electronics assembly from the applicator assembly when the guide sleeve is in the retracted position,

wherein the sensor assembly is releasably coupled to a container and includes a guide sleeve unlock feature disposed to unlock the guide sleeve of the applicator assembly,

wherein in response to a first force to the applicator assembly along the longitudinal axis that drives the extended, locked guide sleeve into the container, the applicator assembly is operable to release and retrieve the sensor assembly from the container, couple the electronics assembly to the sensor assembly to form the on-body device releasably held within the applicator assembly, seal the sealable enclosure with the support structure, and unlock the guide sleeve, and

wherein in response to a second force to the applicator assembly along the longitudinal axis with the extended, unlocked guide sleeve held against a user, the applicator assembly is operable to allow the extended, unlocked guide sleeve to translate along the longitudinal axis to the retracted position, drive the sharp and the sensor of the on-body device through skin of the user in a direction along the longitudinal axis, release the on-body device from the applicator assembly upon the guide sleeve reaching the retracted position; adhere the on-body device to the skin of the user, and retract the sharp into the applicator assembly leaving the sensor in the user and the on-body device sealed from moisture.

39. An on-body device comprising:

an electronics assembly including sensor electronics and an enclosure surrounding the sensor electronics, the sensor electronics including a processor and a communications facility; and

a sensor assembly including a sensor, a support structure, and a connector coupled to the sensor and coupleable to the sensor electronics, the support structure supporting the connector and sensor,

wherein the sensor assembly is sealably matable to the electronics assembly with the sensor in electrical communication with the sensor electronics,

wherein the support structure of the sensor assembly further supports a removable sharp that supports the sensor,

wherein the on-body device is assembled within an applicator in response to a first force applied to the applicator, and

wherein the assembled on-body device is applied to a user in response to a second force applied to the applicator.

40. An applicator of on-body device comprising:

a housing including integrally formed grip features;

a removable cap coupleable to the housing and operative to seal the applicator;

an electronics assembly retention support coupled to the housing and operative to releasably retain an electronics assembly including sensor electronics and a sealable enclosure surrounding the sensor electronics, the sensor electronics including a processor and a communications facility;

a guide sleeve lockable in an extended position partially within the housing and operative to translate along a longitudinal axis of the applicator to a retracted position when unlocked, the guide sleeve including an electronics assembly decouple feature disposed to release the electronics assembly from the applicator when the guide sleeve is in the retracted position; and

a sharp retraction assembly contained within the housing and operative to remove a sharp from a sensor assembly when the guide sleeve reaches the retracted position, wherein the sensor assembly includes a sensor, the sharp supporting the sensor, a support structure, and a connector coupled to the sensor and coupleable to the sensor electronics, the support structure supporting the connector and sensor, and releasably supporting the sharp.

41. The applicator of claim **40** wherein the guide sleeve includes a proximate end and a distal end, the distal end defining a first distal plane,

wherein the electronics assembly retention support defines a second distal plane, and

wherein the second distal plane is closer to the proximate end of the guide sleeve than the first distal plane when the guide sleeve is in the extended position.

42. The applicator of claim **41** wherein in response to a first force applied to the applicator along the longitudinal axis that drives the extended, locked guide sleeve into a container releasably holding the sensor assembly, the applicator is operable to release and retrieve the sensor assembly from the container, couple the electronics assembly to the sensor assembly to form an on-body device releasably held within the applicator, seal the sealable enclosure with the support structure, and unlock the guide sleeve using a guide sleeve unlock feature disposed within the container.

43. The applicator of claim **42** wherein in response to a second force applied to the applicator along the longitudinal axis with the extended, unlocked guide sleeve held against a user, the applicator is operable to allow the guide sleeve to translate along the longitudinal axis to the retracted position, drive the sharp and the sensor of the on-body device through skin of the user in a direction along the longitudinal axis, release the on-body device from the applicator upon the guide sleeve reaching the retracted position, adhere the on-body device to the skin of the user, and retract the sharp into the applicator leaving the sensor in the user and the on-body device sealed from moisture.

44. The applicator of claim **43** wherein the first distal plane is closer to the proximate end of the guide sleeve than the second distal plane when the guide sleeve is in the retracted position.

45. A method comprising:

applying a first force to an applicator assembly along a longitudinal axis of the applicator assembly to drive a guide sleeve of the applicator assembly into a container that releasably holds a sensor assembly, the sensor assembly including a sensor, a sharp supporting the sensor, a support structure, and a connector coupled to the sensor, the support structure supporting the connector and sensor, and releasably supporting the sharp;

engaging a platform retaining the sensor assembly in the container with the guide sleeve to release the sensor assembly;

coupling an electronics assembly releasably held within the applicator assembly to the sensor assembly to form an on-body device;

sealing an enclosure surrounding sensor electronics within the electronics assembly with the support structure of the sensor assembly, the sensor electronics including a processor and a communications facility;

unlocking the guide sleeve of the applicator assembly using a guide sleeve unlock feature disposed within the container to allow the guide sleeve to be translated along the longitudinal axis of the applicator assembly from an extended position to a retracted position, the guide sleeve including an electronics assembly decouple feature disposed to release the electronics assembly from the applicator assembly when the guide sleeve is in the retracted position;

removing the applicator assembly including the on-body device from the container;

applying a second force to the applicator assembly along the longitudinal axis with the extended, unlocked guide sleeve held against a user;

urging the extended, unlocked guide sleeve to translate along the longitudinal axis to the retracted position;

driving the sharp and the sensor of the on-body device through skin of the user in a direction along the longitudinal axis;

releasing the on-body device from the applicator assembly upon the guide sleeve reaching the retracted position;

adhering the on-body device to the skin of the user; and

retracting the sharp into the applicator assembly leaving the sensor in the user and the on-body device sealed from moisture.

46. The method of claim **45** wherein coupling the electronics assembly within the applicator assembly to the sensor assembly includes coupling the connector to the sensor electronics.

47. An apparatus comprising:

an electronics assembly including sensor electronics and a sealable enclosure surrounding the sensor electronics, the sensor electronics including a processor and a communications facility;

a sensor assembly including a sensor, a sharp supporting the sensor, a support structure, and a connector coupled to the sensor and coupleable to the sensor electronics, the support structure supporting the connector and sensor, and releasably supporting the sharp;

an applicator assembly releasably coupled to the electronics assembly and including a guide sleeve lockable in an extended position and operative to translate along a longitudinal axis of the applicator assembly to a retracted position when unlocked, the guide sleeve including an electronics assembly decouple feature disposed to release the electronics assembly from the applicator assembly when the guide sleeve is in the retracted position; and

a container releasably coupled to the sensor assembly and including a guide sleeve unlock feature disposed to unlock the guide sleeve of the applicator assembly,

wherein in response to a first application of linear force to the applicator assembly along the longitudinal axis that drives the extended, locked guide sleeve into the container, the applicator assembly is operable to release and retrieve the sensor assembly from the container, couple the electronics assembly to the sensor assembly to form an on-body device releasably held within the applicator assembly, seal the sealable enclosure with the support structure, and unlock the guide sleeve, and

wherein in response to a second application of linear force to the applicator assembly along the longitudinal axis with the extended, unlocked guide sleeve held against a user, the applicator assembly is operable to allow the extended, unlocked guide sleeve to translate along the longitudinal axis to the retracted position, drive the sharp and the sensor of the on-body device through skin of the user in a direction along the longitudinal axis, release the on-body device from the applicator assembly upon the guide sleeve reaching the retracted position, adhere the on-body device to the skin of the user, and retract the sharp into the applicator assembly leaving the sensor (**202**) in the user and the on-body device sealed from moisture.

48. The apparatus of claim **47** wherein the container further includes a platform disposed to protect and releasably retain the sensor assembly in the container and operative to translate between an initial position and a compressed position.

49. The apparatus of claim **48** wherein the platform is lockable in the initial position and is operable to be unlocked by the guide sleeve of the applicator assembly, to translate to the compressed position in response to the first application of linear force, and to release the sensor assembly upon reaching the compressed position.

50. The apparatus of claim **48** wherein the platform includes a sensor assembly guide feature operative to direct the sensor assembly into the electronics assembly independent of an overall orientation of the apparatus.

51. The apparatus of claim **47** wherein the sensor disposed within the support structure includes a biasing feature operative to bias the sensor into the sharp while the sharp and the sensor are driven through the skin of the user.

52. The apparatus of claim **47** wherein the sensor electronics include at least one electronic contact and the support structure includes a compression feature operative to compress and seal the connector to the at least one electronic contact.

53. The apparatus of claim **47** wherein the container includes guide features to control translation of the guide sleeve and a detent feature which provides an amount of resistance to the first application of linear force to insure that once overcome, the sensor assembly is driven into and seated in the electronics assembly by a resulting translation of the electronics assembly in the applicator assembly.

54. The apparatus of claim **47** wherein the applicator assembly includes guide features to allow the guide sleeve to translate into the applicator assembly and a detent feature which provides resistance to the second application of linear force to insure that once overcome, the sharp and sensor are driven into the user by a resulting translation of the on-body device in the applicator assembly.

55. The apparatus of claim **47** wherein the electronics assembly is sterilized using a first method, the sensor assembly is sterilized using a second method, the electronics assembly is incompatible with the second method of sterilization, and the sensor assembly is incompatible with the first method of sterilization.

56. An apparatus storing a sensor, the apparatus comprising:

an enclosure including an opening, sides, and an end;

a platform having a proximal position proximate to the opening and a distal position proximate to the end, the sides including guide features disposed to engage the platform and to direct the platform to translate from the proximal position to the distal position along a longitudinal axis of the enclosure; and

a support disposed on the end and including a structure arranged to support a sensor assembly, the sensor assembly including a sensor, a sharp supporting the sensor, and a connector,

wherein the sensor assembly is retained within the enclosure when the platform is in the proximal position and released when the platform is in the distal position.

57. The apparatus of claim **56** wherein the platform provides a barrier to protect the sensor assembly from being contacted when the platform is in the proximal position, and

wherein the guide features maintain a major surface of the platform approximately parallel to the end of the enclosure.

58. The apparatus of claim **56** wherein the platform is locked from translating when the platform is in the proximal position.

59. The apparatus of claim **58** wherein the platform is unlocked and operable to translate from the proximal position to the distal position in response to contact with an applicator.

60. The apparatus of claim **56** wherein the platform is operable to lock in the distal position upon reaching the distal position.

61. The apparatus of claim **56** wherein the end includes a sealable end port and the enclosure further comprises a cover for sealing the opening.

62. A sensor assembly comprising:

a sensor having a tail portion, a contacts portion, and a bendable portion;

a seal including electrical contacts disposed to align with the contacts portion of the sensor and to allow electrical signals to pass through the seal;

a support including a distal surface and features for sealably coupling to an electronics assembly; and

a sharp including a channel for supporting the tail portion of the sensor and a hub for griping the sharp during retraction,

wherein the seal is shaped to enclose the contacts portion of the sensor within the support.

63. The sensor assembly of claim **62** wherein the seal is formed from flexible material and includes a hinge allowing the seal to be folded around the contacts portion of the sensor, sealing both sides of the contacts portion.

64. The sensor assembly of claim **62** wherein the bendable portion of the sensor facilitates having a major surface of the contacts portion of the sensor substantially parallel with a circuit board of an electronics assembly when the sensor assembly is mated to the electronics assembly while also concurrently facilitating having the tail portion of the sensor substantially perpendicular to the major surface of the contacts portion.

* * * * *