US011179574B2

(12) **United States Patent**
Boyajian et al.

(10) **Patent No.: US 11,179,574 B2**
(45) **Date of Patent: Nov. 23, 2021**

(54) **METHOD OF ADMINISTERING 5-AMINOLEVULINIC ACID (ALA) TO A PATIENT**

(71) Applicant: **DUSA Pharmaceuticals, Inc.**, Wilmington, MA (US)

(72) Inventors: **Thomas Boyajian**, Wilmington, MA (US); **Mark Carota**, Chelmsford, MA (US); **Brian Mazejka**, Salem, NH (US)

(73) Assignee: **DUSA PHARMACEUTICALS, INC.**, Billerica, MA (US)

(*) Notice: Subject to any disclaimer, the term of this patent is extended or adjusted under 35 U.S.C. 154(b) by 0 days.

(21) Appl. No.: **17/009,871**

(22) Filed: **Sep. 2, 2020**

(65) **Prior Publication Data**

US 2020/0398071 A1 Dec. 24, 2020

Related U.S. Application Data

(60) Continuation of application No. 16/791,004, filed on Feb. 14, 2020, which is a division of application No.
(Continued)

(51) **Int. Cl.**
A61N 5/06 (2006.01)
A61B 5/00 (2006.01)

(52) **U.S. Cl.**
CPC ***A61N 5/062*** (2013.01); ***A61B 5/0064*** (2013.01); ***A61B 5/0082*** (2013.01);
(Continued)

(58) **Field of Classification Search**
CPC A61N 5/06; A61N 5/062; A61N 5/0616; A61N 2005/0626; A61N 2005/0652;
(Continued)

(56) **References Cited**

U.S. PATENT DOCUMENTS

5,032,400 A 7/1991 Wiersum et al.
5,601,838 A 2/1997 Hind
(Continued)

FOREIGN PATENT DOCUMENTS

DE 69827286 T2 11/2005
EP 1 238 652 A1 9/2002
(Continued)

OTHER PUBLICATIONS

Australian Office Action, Application No. 2019200152, dated Nov. 11, 2019, 9 pages.
(Continued)

Primary Examiner — Tammie K Marlen
(74) *Attorney, Agent, or Firm* — Foley & Lardner LLP

(57) **ABSTRACT**

A method of administering 5-aminolevulinic acid (ALA) to a patient uses an adjustable illuminator for photodynamically diagnosing or treating a surface and which includes a plurality of first panels and at least one second panel. The plurality of first panels have wider widths and the at least one second panel has a narrower width. The narrower width is less than the wider widths. The illuminator further includes a plurality of light sources, each mounted to one of the plurality of first panels or the at least one second panel and configured to irradiate the surface with substantially uniform intensity visible light. The plurality of first panels and the at least one second panel are rotatably connected. The at least one second panel is connected on each side to one of the plurality of first panels. The second panel acts as a "lighted hinge" to reduce or eliminate optical dead spaces between adjacent panels when the illuminator is bent into a certain configuration.

18 Claims, 8 Drawing Sheets

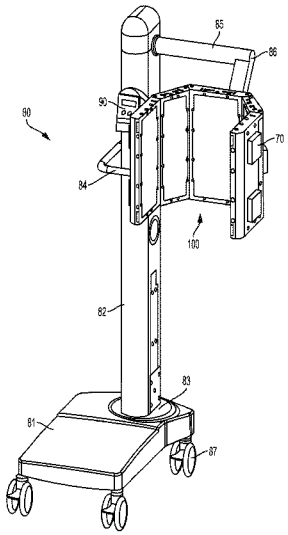

Related U.S. Application Data

15/292,731, filed on Oct. 13, 2016, now Pat. No. 10,589,122.

(60) Provisional application No. 62/241,902, filed on Oct. 15, 2015.

(52) **U.S. Cl.**
CPC *A61N 2005/0626* (2013.01); *A61N 2005/0633* (2013.01); *A61N 2005/0642* (2013.01); *A61N 2005/0651* (2013.01); *A61N 2005/0652* (2013.01); *A61N 2005/0662* (2013.01); *A61N 2005/0663* (2013.01)

(58) **Field of Classification Search**
CPC A61N 2005/0633; A61N 2005/0642; A61N 2005/0663; A61N 2005/0636; A61N 2005/064; A61N 2005/0658; A61N 2005/0651; A61N 2005/0662; A61B 5/0064; A61B 5/0082
See application file for complete search history.

(56) **References Cited**

U.S. PATENT DOCUMENTS

5,686,065	A	11/1997	Haney	
5,814,008	A	9/1998	Chen et al.	
5,849,027	A	12/1998	Gart et al.	
6,223,071	B1	4/2001	Lundahl et al.	
6,709,446	B2	3/2004	Lundahl et al.	
6,897,238	B2	5/2005	Anderson	
7,033,381	B1	4/2006	Larsen	
7,156,865	B2	1/2007	Waldmann	
7,190,109	B2	3/2007	Lundahl et al.	
7,723,910	B2	5/2010	Lundahl et al.	
7,730,893	B2	6/2010	Dougal	
8,030,836	B2	10/2011	Lundahl et al.	
8,216,289	B2	7/2012	Lundahl et al.	
8,758,418	B2	6/2014	Lundahl et al.	
9,108,045	B2	8/2015	Sakamoto et al.	
9,227,082	B2 *	1/2016	McDaniel	A61K 41/0071
9,533,170	B2	1/2017	Dye et al.	
10,357,567	B1	7/2019	Lundahl et al.	
2001/0021812	A1 *	9/2001	Lundahl	A61N 5/0617 600/476
2003/0088296	A1	5/2003	Waldmann	
2004/0010299	A1	1/2004	Tolkoff et al.	
2004/0162596	A1	8/2004	Altshuler et al.	
2004/0260365	A1	12/2004	Groseth et al.	
2005/0075703	A1	4/2005	Larsen	
2005/0090877	A1	4/2005	Harth et al.	
2006/0241726	A1	10/2006	Whitehurst	
2006/0253175	A1	11/2006	Fan et al.	
2006/0287696	A1	12/2006	Wright et al.	
2007/0283655	A1	12/2007	Tobin	
2008/0031924	A1	2/2008	Gilson et al.	
2009/0324727	A1	12/2009	Roca	
2010/0010591	A1	1/2010	Daffer	
2010/0174223	A1	7/2010	Sakamoto et al.	
2010/0298758	A1	11/2010	Christiansen et al.	
2011/0020441	A1	1/2011	Klaveness et al.	
2011/0053965	A1	3/2011	Trigiante	
2011/0106222	A1	5/2011	Wilson et al.	
2011/0224598	A1	9/2011	Barolet	
2011/0293528	A1	12/2011	Godal et al.	
2012/0283328	A1	11/2012	Modi	
2012/0287671	A1	11/2012	Parker et al.	
2013/0066405	A1	3/2013	Dougal	
2013/0190845	A1	7/2013	Liu et al.	
2013/0304019	A1	11/2013	Cooper et al.	
2013/0315999	A1	11/2013	Paithankar et al.	
2014/0010761	A1	1/2014	Parent et al.	
2014/0067024	A1	3/2014	Jones et al.	
2015/0162109	A1	6/2015	Nager	
2015/0238776	A1	8/2015	Sakamoto et al.	
2016/0045757	A1	2/2016	Groseth	
2016/0166846	A1	6/2016	Chae	
2016/0175609	A1	6/2016	Dye et al.	
2016/0175610	A1	6/2016	Livingston et al.	
2016/0346392	A1	12/2016	Wulf	
2020/0100997	A1	4/2020	Soler et al.	

FOREIGN PATENT DOCUMENTS

WO	WO-93/09847	A1	5/1993
WO	WO-99/22802	A1	5/1999
WO	WO-02/13788	A1	2/2002
WO	WO-2007/112427	A2	10/2007
WO	WO-2009/003173	A1	12/2008
WO	WO-2011/124912	A1	10/2011
WO	WO-2014/131115	A1	9/2014
WO	WO-2015/041919	A1	3/2015

OTHER PUBLICATIONS

European Office Action, Application No. 16787667.1, dated Sep. 24, 2019, 5 pages.

GLAD.com.au: "GLAD History", 2012, [online] URL: http://www.glad.com.au/about-glad/glad-history/, retrieved online Nov. 8, 2019.

International Preliminary Reporton Patentability, PCT/US2016/056572, dated Apr. 26, 2018, 9 pages.

International Preliminary Report on Patentability, PCT/US2018/027070, dated Oct. 24, 2019, 10 pages.

International Search Report and Written Opinion International Application No. PCT/US2018/027070, dated Oct. 16, 2018, 18 pages.

Letter to UVBiotek, LLC dated Jul. 28, 2017 Re: K170187, Trade/Device Name: Photodynamic Therapy Device, available at https://www.accessdata.fda.gov/cdrh_docs/pdf17/K170187.pdf (accessed Apr. 30, 2020).

Notice of Allowance, U.S. Appl. No. 15/487,991, dated Jan. 15, 2020, 11 pages.

Notice of Allowance, U.S. Appl. No. 15/487,991, dated Oct. 2, 2019, 16 pages.

Partial International Search, Annex to Form PCT/ISA/206, International Application No. PCT/US2018/027070, dated Jul. 19, 2018, 10 pages.

USPTO Advisory Action, U.S. Appl. No. 15/487,991, dated May 15, 2018, 5 pages.

USPTO Interview Summary, U.S. Appl. No. 15/487,991, dated Sep. 22, 2017, 4 pages.

USPTO Notice of Allowance, U.S. Appl. No. 15/292,731, dated Nov. 14, 2019, 12 pages.

USPTO Office Action, U.S. Appl. No. 15/487,991, dated Jul. 31, 2018, 20 pages.

USPTO Office Action, U.S. Appl. No. 15/487,991, dated Apr. 9, 2019, 27 pages.

USPTO Office Action, U.S. Appl. No. 15/487,991, dated Jun. 12, 2017, 22 pages.

USPTO Office Action, U.S. Appl. No. 15/487,991, dated Feb. 6, 2018, 19 pages.

Webpage printout, Hill Laboratories Company, "Aklarus Phototherapy Treatment System with Red, Blue and Infrared Wavelengths by Hill Therapeutics," available at https://hilllabs.com/therapeutics/Aklarus-Photo-Therapy-System.php (accessed Apr. 30, 2020).

USPTO Office Action, U.S. Appl. No. 16/438,702, dated Oct. 13, 2020, 17 pages.

Braathen, Lasse R., et al. "Guidelines on the Use of Photodynamic Therapy for Nonmelanoma Skin Cancer: an International Consensus." Journal of the American Academy of Dermatology 56.1, Jan. 2007, pp. 125-143.

Dragieva, G. et al., "A Randomized Controlled Clinical Trial of Topical Photodynamic Therapy with Methyl Aminolaevulinate in the Treatment of Actinic Keratoses in Transplant Recipients." British Journal of Dermatology 151.1, Jul. 2004, pp. 196-200.

Kurwa, Habib A., et al., "A Randomized Paired Comparison of Photodynamic Therapy and Topical 5-Fluorouracil in the Treatment

(56) **References Cited**

OTHER PUBLICATIONS

of Actinic Keratoses." Journal of the American Academy of Dermatology 41.3, Sep. 1999, pp. 414-418.
Maccormack, Mollie A., "Photodynamic Therapy in Dermatology: An Update on Applications and Outcomes." Seminars in Cutaneous Medicine and Surgery. vol. 27, No. 1, WB Saunders, Mar. 2008, pp. 52-62.
Ozog, David M., et al., "Photodynamic Therapy: A Clinical Consensus Guide." Dermatologic Surgery 42.7, Jul. 2016, pp. 804-827.
Wolf, Peter, et al., "Topical Photodynamic Therapy With Endogenous Porphyrins After Application of 5-Aminolevulinic Acid: An Alternative Treatment Modality for Solar Keratoses, Superficial Squamous Cell Carcinomas, and Basal Cell Carcinomas?" Journal of the American Academy of Dermatology 28.1, Jan. 1993, pp. 17-21.
Extended European Search Report, Application No. 20214586.8, dated Jun. 2, 2021, 8 pages.
USPTO Notice of Allowance, U.S. Appl. No. 16/438,702, dated May 20, 2021, 10 pages.
Daniel Barolet et al., Radiant Near Infrared Light Emitting Diode Exposure as Skin Preparation to Enhance Photodynamic Therapy Inflammatory Type Acne Treatment Outcome, Lasers in Surgery and Medicine vol. 42, No. 2, Feb. 1, 2010, pp. 171-178.
Johanna T.H.M. Van Den Akker et al., Effect of Elevating the Skin Temperature During Topical ALA Application on in vitro ALA penetration Through Mouse Skin and in vivo PpIX production in Human Skin, Photochemical and Photobiological Sciences, Royal Society of Chemistry, Cambridge, GB, vol. 3, No. 3, Mar. 1, 2004, pp. 263-267.
Petras Juzenas et al., Uptake of Topically Applied 5-Aminolevulinic Acid and Production of Protoporphyrin IX in Normal Mouse Skin: Dependence on Skin Temperature, Photochemistry and photobiology, vol. 69, No. 4, Apr. 1, 1999, pp. 478-481.
Extended European Search Report, Application No. 18835929.3, dated Mar. 12, 2021, 10 pages.
USPTO Notice of Allowance, U.S. Appl. No. 16/438,702, dated Mar. 22, 2021, 14 pages.
USPTO Office Action, U.S. Appl. No. 17/109,311, dated Mar. 2, 2021, 16 pages.
Britannica, The Editors of Encyclopaedia, "Gel: Physics and Chemistry", 4 pages, Jul. 20, 1998, and "Gel: Additional Information", 1 page, Available on line at: https://www.britannica.com/science/gel and https://www.britannica.com/science/gel/additional-info#history.
Fehr et al., Photodynamic Therapy of Vulvar and Vaginal Condyloma and Intraepithelial Neoplasia Using Topically Applied 5-Aminolevulinic Acid, Lasers in Surgery and Medicine, 2002, 30:273-279, 7 pages.
Fehr et al., Selective Photosensitizer Distribution in Vulvar Condyloma Acuminatum After Topical Application of 5-Aminolevulinic Acid, Am. J. Obstet. Gynecol., vol. 174(3), Mar. 1996, pp. 951-957.
Hurlimann et al., Photodynamic Therapy of Superficial Basal Cell Carcinomas Using Topical 5-Aminolevulinic Acid in a Nanocolloid Lotion, Pharmacology and Treatment, Dermatology 197, 1998, pp. 248-254.
Reinhold et al., A Randomized, Double-Blind, Phase III, Multicentre Study to Evaluate the Safety and Efficacy of BF-200 ALA (Ameluz®) vs. Placebo in the Field-Directed Treatment of Mild-to-Moderate Actinic Keratosis with Photodynamic Therapy (PDT) When Using the BF-RhodoLED® Lamp, British Journal of Dermatology, 175(4): 696-705, Feb. 27, 2016, 10 pages.
Third Party Submission filed in U.S. Appl. No. 17/109,311, filed Jun. 21, 2021, 21 pages.
USPTO Notice of Allowance, U.S. Appl. No. 17/109,311, dated Aug. 10, 2021, 14 pages.
USPTO Office Action, U.S. Appl. No. 17/109,311, dated Jul. 20, 2021, 17 pages.

* cited by examiner

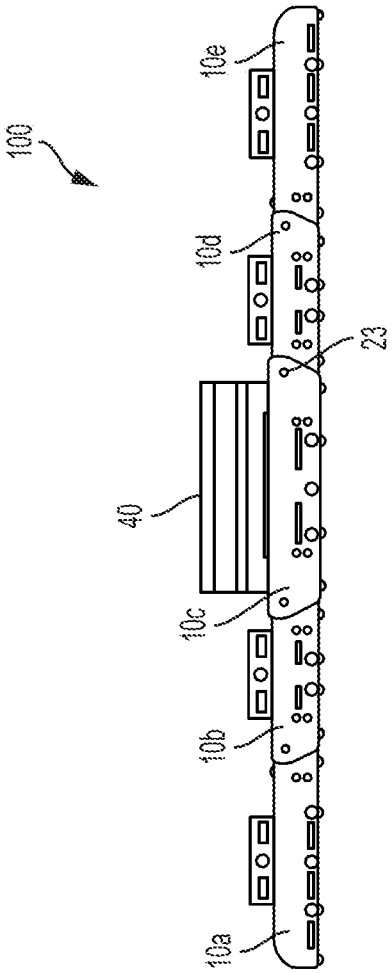

FIG. 1B

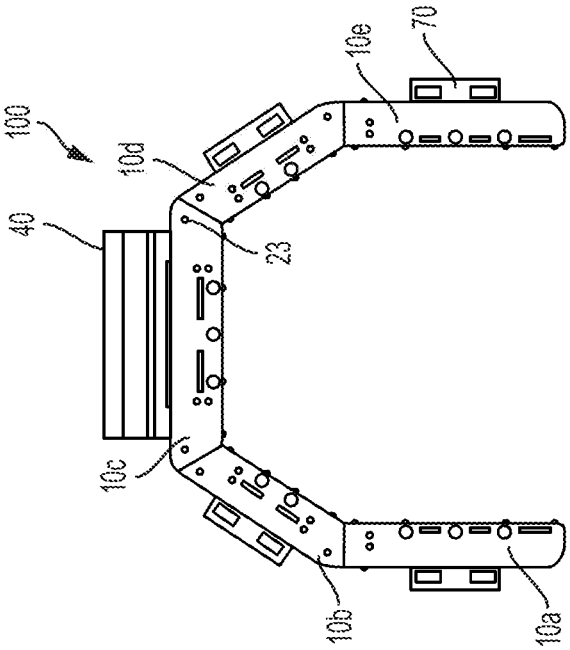

FIG. 1A

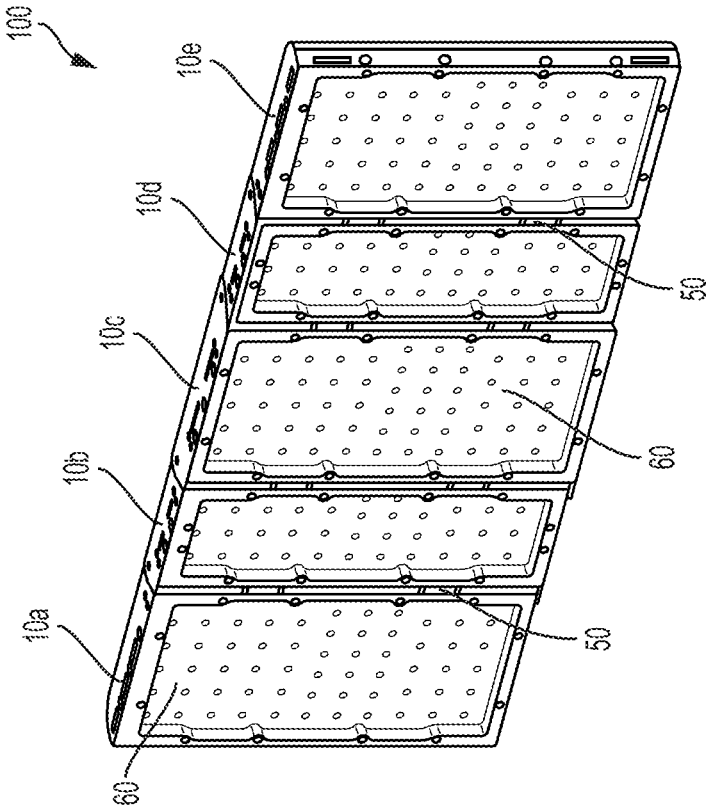
100
10e
10d
10c
10b
10a
50
60
50
60

FIG. 2B

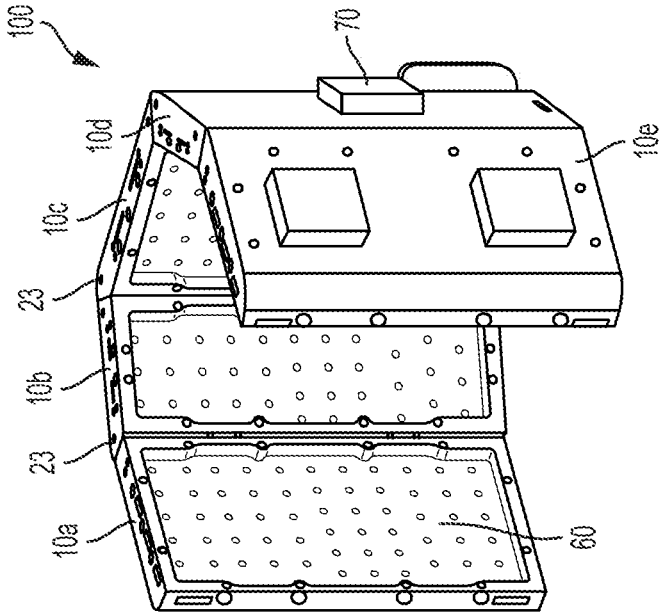
100
70
10d
10e
10c
23
10b
23
10a
60

FIG. 2A

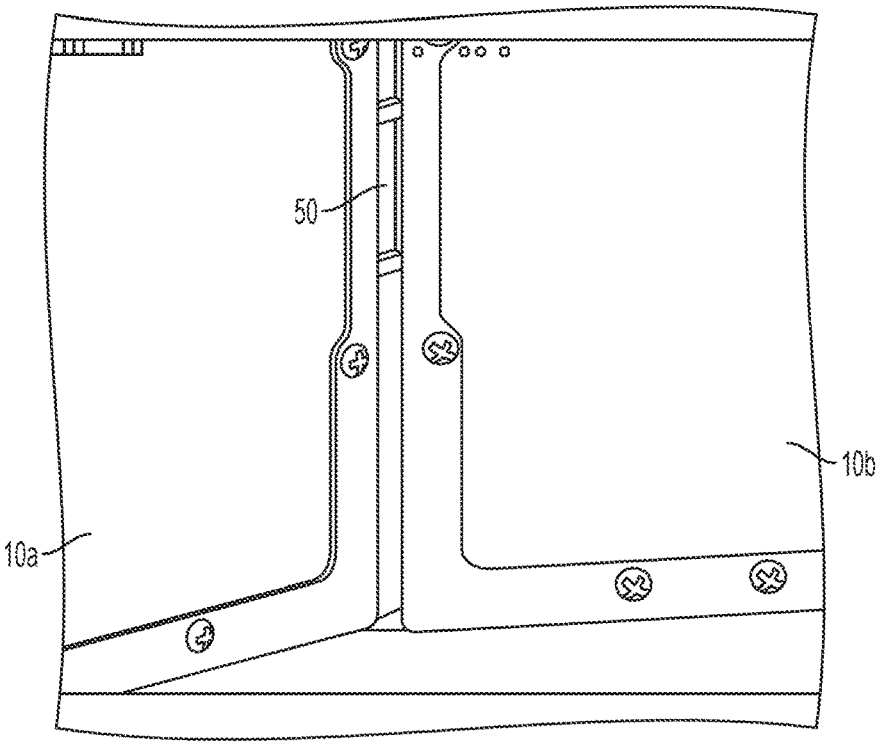

FIG. 3A

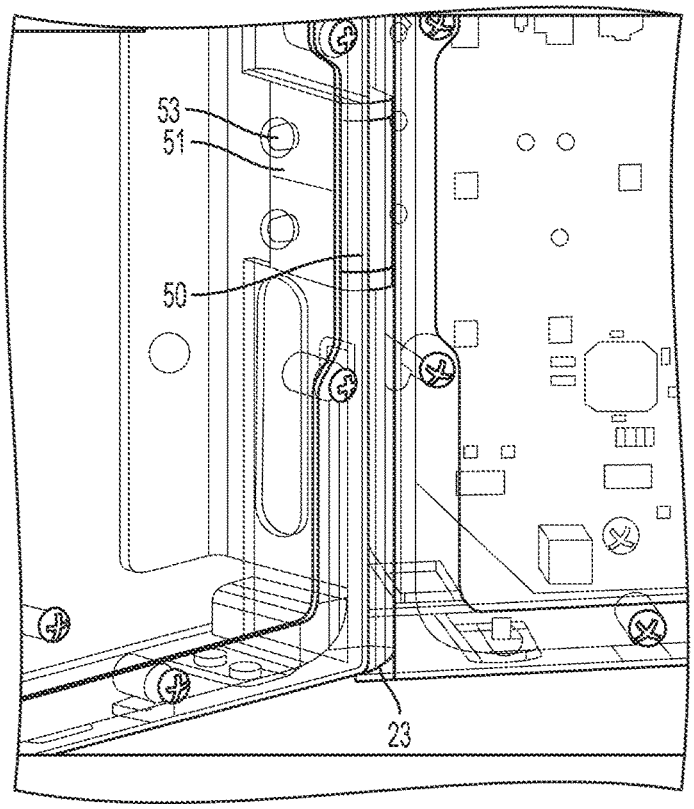

FIG. 3B

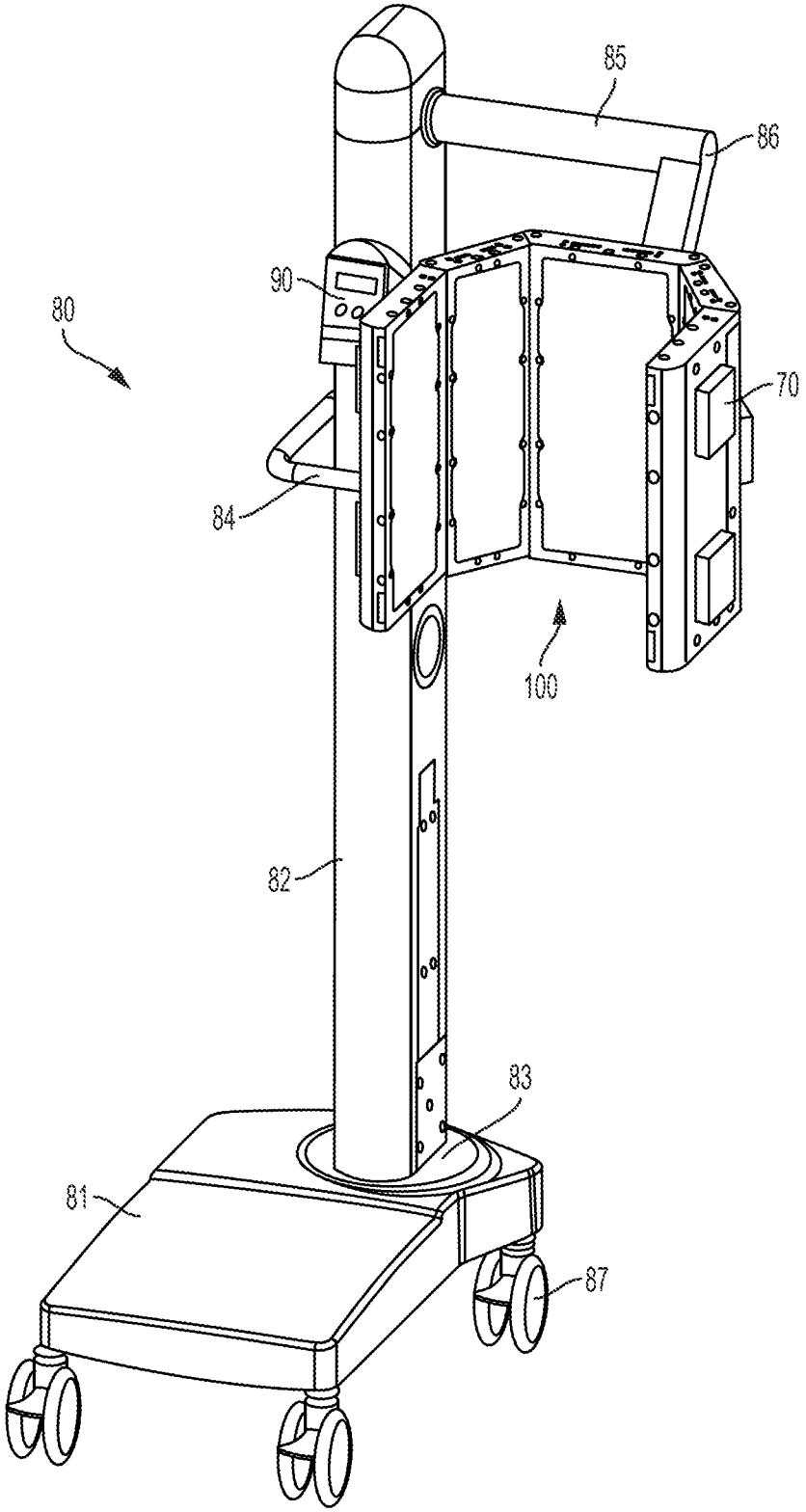

FIG. 4

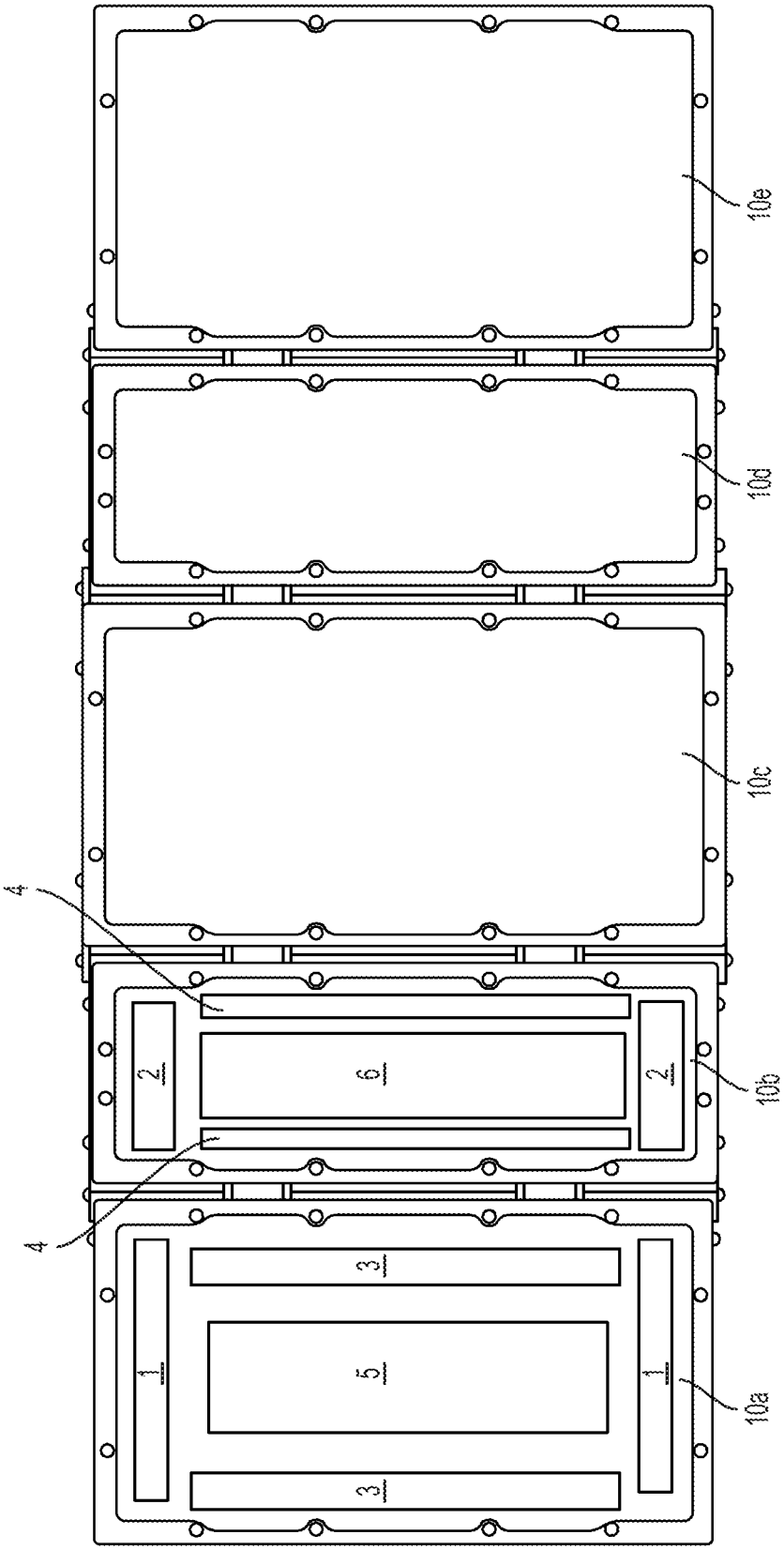

FIG. 5

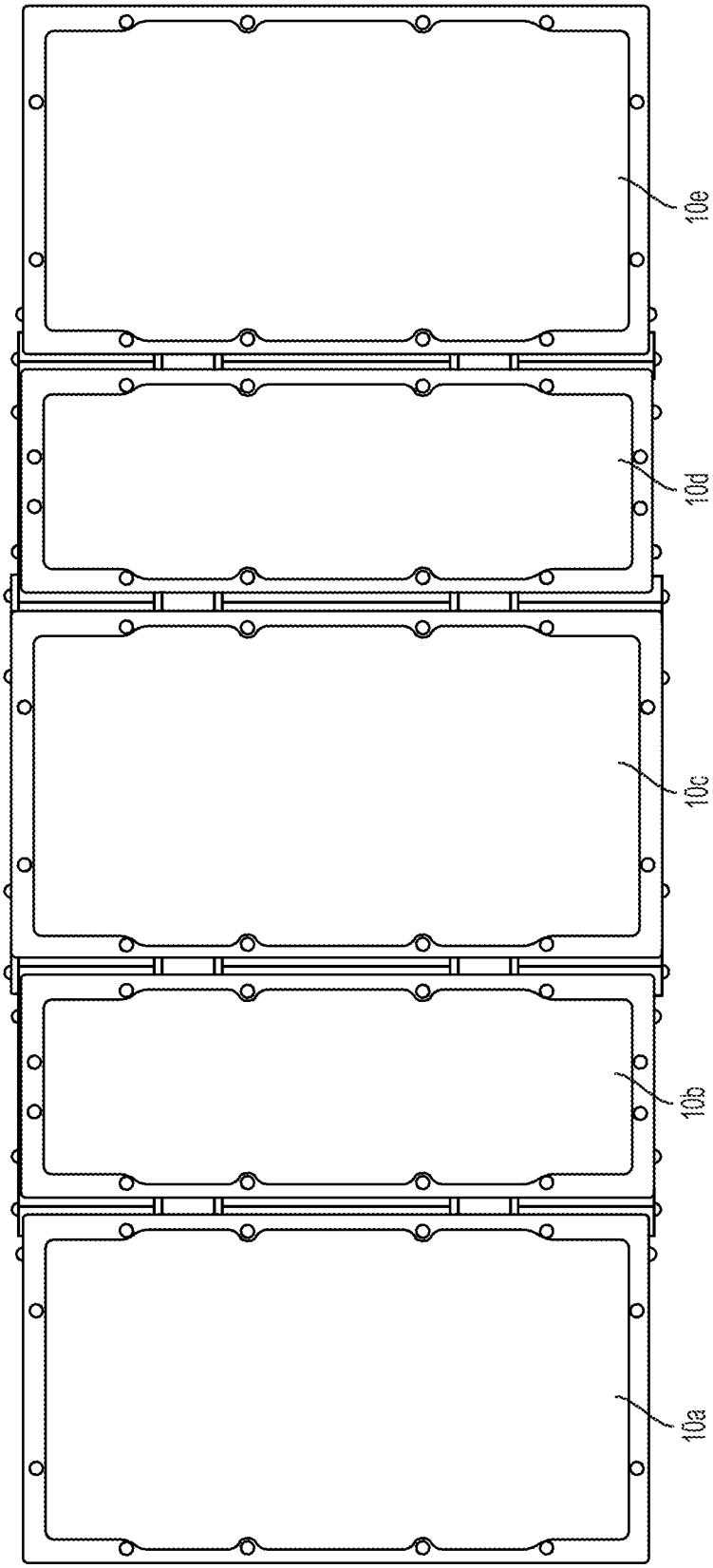

FIG. 6

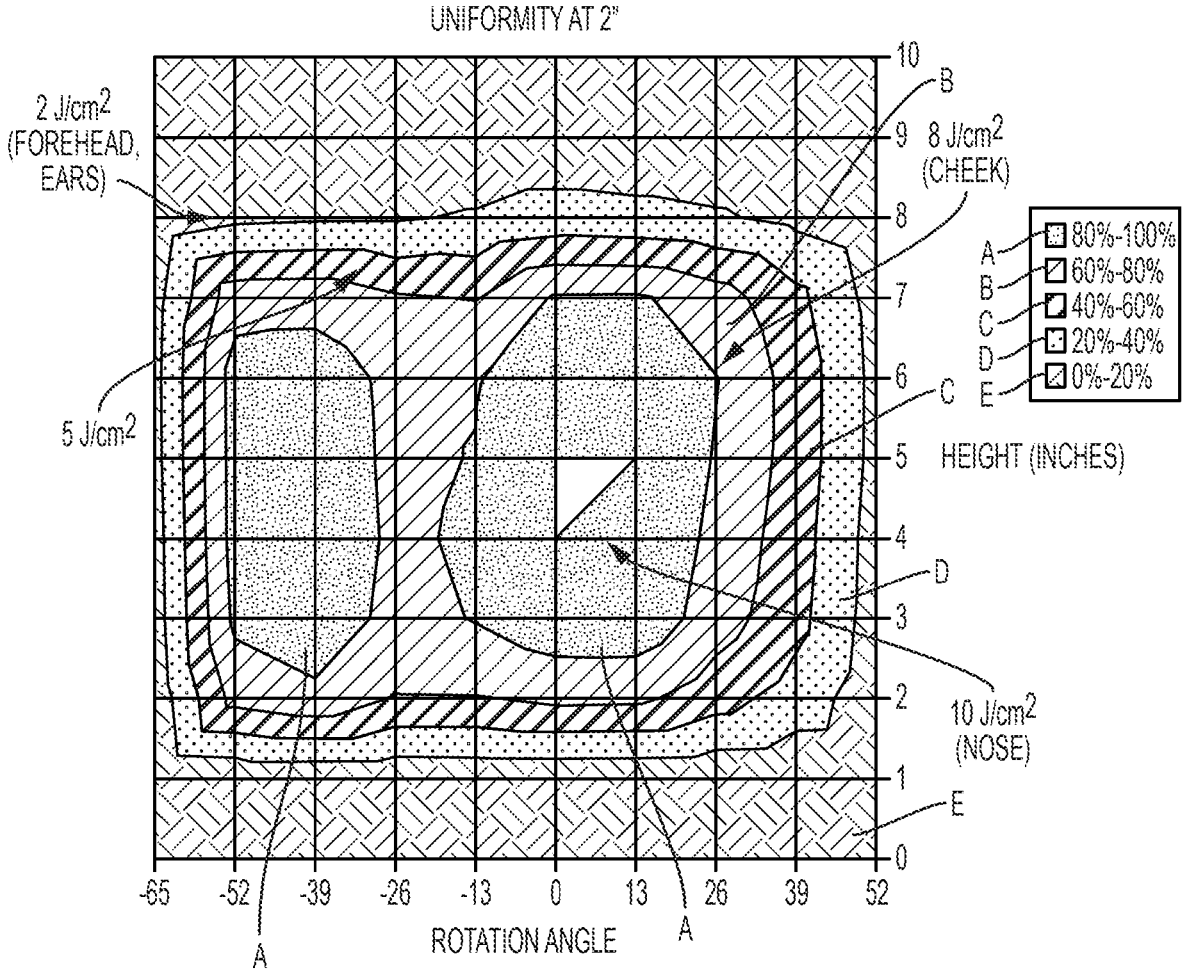
UNIFORMITY AT 2"
2 J/cm2 (FOREHEAD, EARS)
8 J/cm2 (CHEEK)
5 J/cm2
10 J/cm2 (NOSE)
A
B
C
D
E
80%-100%
60%-80%
40%-60%
20%-40%
0%-20%
HEIGHT (INCHES)
ROTATION ANGLE
-65
-52
-39
-26
-13
0
13
26
39
52
0
1
2
3
4
5
6
7
8
9
10

FIG. 7

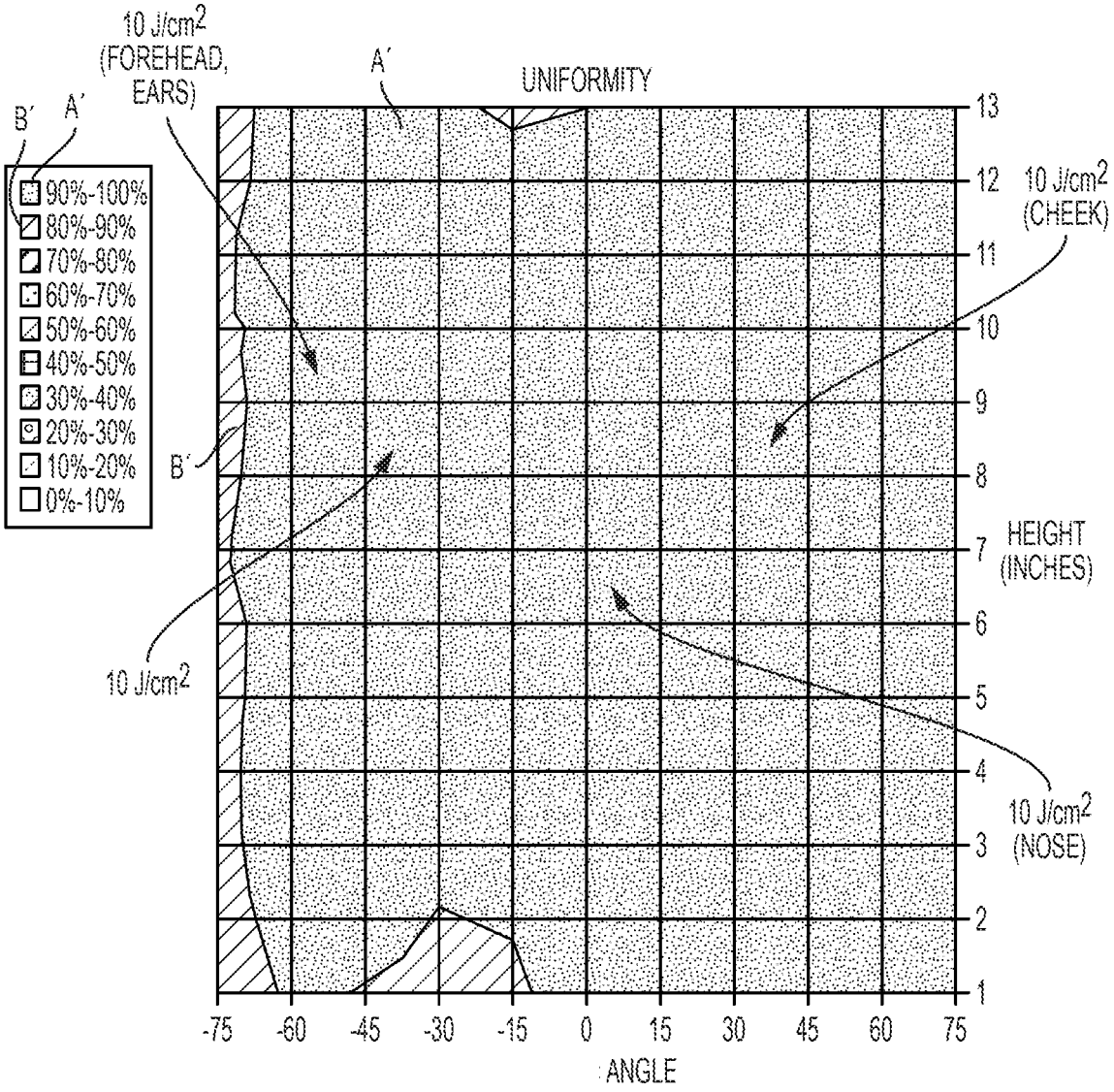
10 J/cm2 (FOREHEAD, EARS)
A′
UNIFORMITY
B′
A′
90%-100%
80%-90%
70%-80%
60%-70%
50%-60%
40%-50%
30%-40%
20%-30%
10%-20%
0%-10%
B′
10 J/cm2 (CHEEK)
HEIGHT (INCHES)
10 J/cm2
10 J/cm2 (NOSE)
13
12
11
10
9
8
7
6
5
4
3
2
1
-75
-60
-45
-30
-15
0
15
30
45
60
75
ANGLE

FIG. 8

METHOD OF ADMINISTERING 5-AMINOLEVULINIC ACID (ALA) TO A PATIENT

CROSS-REFERENCE TO RELATED APPLICATIONS

This application is a continuation of U.S. application Ser. No. 16/791,004, filed Feb. 14, 2020, which is a divisional application of U.S. application Ser. No. 15/292,731, which was filed Oct. 13, 2016 and granted as U.S. Pat. No. 10,589,122 on Mar. 17, 2020, which claims the benefit of priority to U.S. Provisional Application No. 62/241,902 filed on Oct. 15, 2015, the entire contents of all of which are incorporated herein by reference.

FIELD

The invention relates generally to an adjustable illuminator that provides a uniform distribution of visible light in a number of configurations and is suitable for use in photodynamic therapy and diagnosis.

BACKGROUND

Photodynamic therapy (PDT), photodynamic diagnosis (PD), or photochemotherapy is generally used to treat and/or diagnose several types of ailments in or near the skin or other tissues, such as those in a body cavity. For example, PDT or PD may be used for treatment or diagnosis of actinic keratosis of the scalp or facial areas of a patient. In addition, PDT and PD may be used for treatment and diagnosis of other indications (e.g., acne, warts, psoriasis, photo-damaged skin, cancer) and other areas of the patient (e.g., arms, legs).

During one form of PDT or PD, a patient is first administered a photoactivatable agent or a precursor of a photoactivatable agent that accumulates in the tissue to be treated or diagnosed. The area in which the photoactivatable agent is administered is then exposed to visible light, which causes chemical and/or biological changes in the agent. These changes allow the agent to then selectively locate, destroy, or alter the target tissue while, at the same time, causing only mild and reversible damage to other tissues in the treatment area. One example of a precursor of a photoactivatable agent is 5-aminolevulinic acid ("ALA"), which is commonly used in PDT of actinic keratosis. As they are used here, the terms ALA or 5-aminolevulinic acid refer to ALA itself, precursors thereof and pharmaceutically acceptable salts of the same.

For effective treatment, it is desirable to have a power output that is uniform in intensity and color. Illuminators, such as those disclosed in U.S. Pat. Nos. 8,758,418; 8,216,289; 8,030,836; 7,723,910; 7,190,109; 6,709,446; 6,223,071, which are incorporated by reference in their entireties for the techniques, methods, compositions, and devices related to PDT and PD, are typically used to provide the proper uniformity of light for treatment purposes. These devices generally include a light source (e.g., a fluorescent tube), coupling elements that direct, filter or otherwise conduct emitted light so that it arrives at its intended target in a usable form, and a control system that starts and stops the production of light when necessary.

SUMMARY

Because PDT can be used to treat a variety of treatment areas, some illuminators utilize two or more panels, each

panel having a light source to emit light at the intended target area. These panels are coupled together so as to be rotatable relative to each other. By incorporating multiple, rotatable panels, the overall size and shape of the area that is illuminated can be changed according to the intended treatment area.

In conventional adjustable illuminators, the panels are equally sized by width and length and are typically driven at the same power level. The panels are further joined at their edges by hinges so as to be rotatable to achieve a desired configuration. However, due to the edges of the panels and the presence of the hinges, the light source(s) of one panel does not immediately adjoin the light source(s) of an adjacent panel. As a result, light is not emitted from a "gap" between the light sources. The lack of light emitting from such areas, together with the uniform supply of power to the panels, can cause optical "dead space" in certain portions of the target treatment area. These portions, in turn, receive less overall light, resulting in a lower dose of treatment in those portions. In some instances, the dose of treatment can be lowered by as much as a factor of five when compared with those areas receiving an optimal amount of light.

Generally, these conventional illuminators are used for phototherapy of acne, which typically does not require the administration of a photoactivatable agent for effective treatment. Thus, exposure to the light alone is generally sufficient treatment. Moreover, because multiple treatment sessions can be utilized to effectively treat the condition, uniformity of light across the target area during a given treatment is less of a concern in some situations. However, some forms of treatment involving PDT, such as the use of ALA to treat actinic keratosis, require specific and highly uniform intensity and color of light to achieve effectiveness. In these instances, successful PDT relies on the targeted delivery of both the correct quantity of the photoactivatable agent and the correct quantity (i.e., power and wavelength) of light to produce the desired photochemical reactions in the target cells. Thus, to achieve this, the light source must provide illumination to the target area and this illumination must be uniform with respect to both wavelength and power. The optical dead space that can occur at or near the hinges of conventional adjustable illuminators reduces the uniformity of the light along the treatment area, thereby reducing the effectiveness of PDT for these specific treatments. Moreover, these illuminators are also configured to adjust within a limited range, such that only a limited amount of surfaces on a patient's body may be treated, such as a patient's face and scalp. In addition, due to the various contours of a patient's body, the uniformity of light delivered by these conventional illuminators may vary substantially depending on the treatment area of the patient.

Therefore, it is an object of some embodiments of the present invention to reduce or eliminate these dead spaces and provide for a more uniform light distribution in an adjustable illuminator designed for PDT or PD of a variety of targeted areas. In addition, it is an object of some embodiments of the present invention to provide an infinitely adjustable illuminator that can effectively deliver a uniformity of light across various areas of a patient's body, such as a patient's extremities (e.g., arms and legs) or torso, in addition to a patient's face and scalp. Thus, a uniform light may be delivered to a targeted treatment area regardless of the shape and location of the contoured surface of the patient's body.

One embodiment of the present invention uses a plurality of panels, wherein at least one panel is of a different width than the other panels. This panel is positioned between two

other panels and, in a way, acts as a "lighted hinge" to provide enough "fill-in" light to reduce or eliminate the optical dead spaces when the panels are bent into a certain configuration. Preferably, five panels in total are used to provide for an optimal increase in the total size of possible treatment areas. Two of the panels are preferably of a smaller width than the other three larger panels. These panels are positioned in an alternating manner such that each of the smaller-width panels is situated in between two of the three larger panels to allow for both adjustability and increased uniformity. Furthermore, to further reduce or eliminate optical dead spaces, the panels are preferably coupled together using nested hinges, thereby reducing the area in which no light source is present on the illuminator. In order to even further reduce or eliminate optical dead spaces, it is preferable that the light sources on each of the panels are individually configurable to provide specific power output to certain areas of the light sources on the panels to compensate for decreased uniformity. For example, the power outputted to each individual diode in an array of light emitting diodes (LED) may be individually adjusted.

BRIEF DESCRIPTION OF THE DRAWINGS

Features, aspects, and advantages of the present invention will become apparent from the following description and the accompanying exemplary embodiments shown in the drawings, which are briefly described below.

FIGS. **1**A-**1**B show top views of a main body of an illuminator according to an exemplary embodiment.

FIGS. **2**A-**2**B show perspective views of the main body of the illuminator of FIGS. **1**A-**1**B.

FIGS. **3**A-**3**B show detailed views of the nested hinges of the main body of the illuminator of FIGS. **1**A-**1**B.

FIG. **4** shows a perspective view of the illuminator having the main body of FIGS. **1**A-**1**B mounted to a stand.

FIG. **5** shows a schematic view illustrating an addressable configuration of LEDs mounted on the main body of the illuminator of FIGS. **1**A-**1**B.

FIG. **6** shows a schematic view illustrating widths and lengths of individual panels of the main body of the illuminator of FIGS. **1**A-**1**B.

FIG. **7** shows a graph illustrating light dosage across a treatment area according to a conventional paneled illuminator.

FIG. **8** shows a graph illustrating light dosage across the same treatment area as FIG. **7** using an illuminator according to one embodiment of the present invention.

DETAILED DESCRIPTION

FIGS. **1**A-**1**B and **2**A-**2**B illustrate one embodiment of a configurable illuminator according to the present invention. The illuminator includes a main body **100**, which preferably has five individual panels **10***a*-**10***e*, each of which are connected in a rotatable manner via nested hinges **50**. Each panel contains an array of light emitting diodes (LED) **60**, which may be configured in an evenly spaced pattern across the face of the panel. The number of individual LEDs arranged in a given array is not particularly limited. Alternatively, other types of light sources may be used, such as fluorescent or halogen lamps.

Preferably, each LED array **60** extends as far to the edges as possible. In addition, the LED arrays **60** are preferably dimensioned to provide an overall lighted area for a given treatment area based on a range from the 5th percentile of corresponding female sizes to the 95th percentile of corresponding male sizes for that particular treatment area. The LED arrays **60** emit light at an appropriate wavelength according to the intended treatment or to activate the particular photoactivatable agent used in treatment or diagnosis. For example, when ALA is used as a precursor of a photoactivatable agent for the treatment of actinic keratosis, the LED arrays **60** preferably emit blue light having wavelengths at or above 400 nanometers (nm), for example, about 430 nm, about 420 nm or, for example, 417 nm. However, the LED arrays **60** may also emit visible light in other ranges of the spectrum, such as in the green and/or red ranges between 400 and 700 nm, for example, about 625 nm to 640 nm or, for example, 635 nm. For example, the LED arrays **60** may also emit light having wavelengths of 510 nm, 540 nm, 575 nm, 630 nm, or 635 nm. In addition, the LED arrays **60** may be configured to emit light continuously or the LED arrays **60** may be configured to flash the diodes on and off based on a predetermined interval. Furthermore, the LED arrays **60** may be configured such that only one wavelength of light (e.g., blue) is emitted. Alternatively, the LED arrays **60** may be configured such that two or more wavelengths of light are emitted from the arrays. For example, the LED arrays **60** may be configured to alternately emit blue light and red light for treatment purposes.

As shown in FIGS. **1**A-**1**B and **2**A-**2**B, the five panels **10***a*-**10***e* are of different widths relative to one another. In particular, in certain embodiments, three panels **10***a*, **10***c*, **10***e* are configured to have wider widths, while two panels **10***b*, **10***d* have smaller, narrower widths, each of the narrower widths of the two panels **10***b*, **10***d* being less than each of the wider widths of the three panels **10***a*, **10***c*, **10***e*. In some embodiments, the wider widths of the three larger panels **10***a*, **10***c*, **10***e* are approximately equal. In other embodiments, the wider widths of the three larger panels **10***a*, **10***c*, **10***e* are different relative to one another. In addition, the narrower widths of the two panels **10***b*, **10***d* may be approximately equal or may be different relative to one another. The panels are further arranged in an alternating configuration, with the narrower panels (e.g., **10***b*) positioned in between two wider panels (e.g., **10***a*, **10***c*). As shown in FIG. **6**, in some embodiments, the narrower panels **10***b*, **10***d* are configured to have a width that is about 30% to 60% less than the width of the wider panels **10***a*, **10***c*, **10***e*. In other embodiments, the narrower panels **10***b*, **10***d* are configured to have a width that is about 30% to 50% less than the width of the wider panels **10***a*, **10***c*, **10***e*.

As shown in FIGS. **1**A-**1**B and **2**A-**2**B, the panels **10***a*-**10***e* are rotatably connected by hinges **50**. The hinges **50** may take the form of nested hinges, which may include hinges that substantially reduce or eliminate optical dead spaces. As shown in FIGS. **2**A-**2**B, on at least one side of a panel, a tab **23** may extend out from both the top and bottom of the panel. The tabs **23** are configured such that a side of an adjacent panel may be received between the tabs **23**, as shown in FIG. **2**A. Thus, as best seen in FIGS. **2**A-**2**B and **6**, the height of the adjacent panel (e.g., panel **10***a*) is slightly smaller than the height of the tabbed panel (e.g., panel **10***b*) into which the adjacent panel is received. As shown in FIG. **6**, the middle panel (i.e., panel **10***c*) is preferably configured as having the largest height, such that it is tabbed on both sides and may receive the sides of adjacent panels on each side. As seen in FIGS. **1**A-**1**B, each of the tabs **23** further includes an opening to receive a bolt to connect adjacent panels together.

As shown in further detail in FIGS. **3**A-**3**B, between the tabs **23** are the nested hinges **50**, which are mounted to the inner side surfaces of adjacent panels (e.g., **10***a*, **10***b*) to

allow for rotation of the panels. A flange **51** of the hinge **50** is mounted to the inner side surface of a panel via bolts **53**. The inner side surface of a panel may include a recess in which the flange **51** may be placed. The inner side surface of the panel may also include an additional recess to accommodate the joint of the hinge **50** such that the joint of the hinge **50** becomes substantially flush with an outer front surface of the panel. Such configurations may allow for the outside vertical edges of adjoining panels to be positioned closer to one another. By spacing the vertical edges of adjoining panels closer, optical dead spaces may be further reduced or eliminated. In addition, the hinges **50** together with the tabs **23** may reduce the number of pinch points present in the system.

As shown in FIGS. **1A-1B**, the main body **100** of the illuminator may include a mounting head **40**. The mounting head **40** may allow for the main body **100** to be mounted to a movable stand **80**, which is shown in FIG. **4**, to allow a user to easily move the main body **100** to the appropriate treatment position. The stand **80** includes a base **81** and a vertical pillar **82**. The base **81** may further include wheels **87** at its bottom in order to allow the user to horizontally move the illuminator to an appropriate position. The wheels **87** may include locks, such that the stand **80** is prevented from further horizontal movement once positioned. In addition, the vertical pillar **82** may be attached to the base **81** at a pivot point **83**. The pivot point **83** allows the vertical pillar **82** to be rotated to increase the range of positioning for the illuminator. At a top end, the vertical pillar **82** includes a connecting arm **85**, which may serve as a mounting structure for the main body **100**. The connecting arm **85** includes a hinge point **86** such that the main body **100** can be moved vertically relative to the stand **80**. The vertical pillar **82** may also be configured as a telescopic structure, such that the user can change the height of the vertical pillar **82**. This allows for an increased range of vertical movement for the main body **100**, which can allow the user to position the main body **100** at lower portions of a treatment area, such as a patient's legs or feet. The stand **80** may also include a stabilization arm **84**. Once the stand **80** and main body **100** is positioned, the stabilization arm **84** may be attached to the main body **100** to prevent unwanted movement of the main body **100** during treatment. As further shown in FIG. **4**, a controller and power supply **90** is mounted to the stand **80** in order to supply electrical power to the main body **100** and allow the user to control the main body **100** for treatment purposes. Alternatively, the controller and power supply **90** may be directly mounted to the main body **100**. In order to provide a cooling system for the LED arrays **60**, one or more fans **70** may be mounted onto each of the panels, as shown in FIG. **4**.

At least one control unit is also connected to the panels to regulate power to the lights to achieve the required uniformity and intensity for the target treatment. The control unit may be implemented as hardware, software, or a combination of both, such as a memory device storing a computer program and a processor to execute the program. Alternatively, each panel may have a dedicated control unit to regulate power to the individual LED array on a given panel to allow for more particular fine-tuning of the illuminator, which may further enhance uniformity and increase efficiency. For example, under Lambert's cosine law, light intensity at a given point on a "Lambertian" surface (such as skin) is directly proportional to the cosine of the angle between the incoming ray of light and the normal to the surface. Thus, a ray of light that is directed to the front of a curved surface (e.g., a head of a patient) will arrive in a substantially perpendicular manner to that area and will result in 100% absorbance. However, a ray of light that arrives at a side edge of the curved surface will arrive in a substantially parallel manner. According to Lambert's cosine law, the intensity, and thus absorption, of the light at the side edge will approach zero, making treatment at that area ineffective. Thus, a "fall off" of light exposure tends to occur at the edges of a curved surface. In addition, "fall off" increases as the distance between the light source and the point on the surface increases.

Configuring an illuminator to conform to the curved surface (e.g., a U-shaped configuration designed to "wrap around" the curvature of the surface) aids in reducing this effect and increases overall uniformity. However, to sufficiently increase uniformity, the light source should be larger relative to the target treatment area in order to fully encompass the body part to be treated and also provide light from all angles to any target point on the treatment area. In order to increase the uniformity of light exposure to the treatment area while maintaining a practical size of the illuminator, the LED arrays **60** may be individually configured to increase the intensity of light emitting from certain diodes to compensate for this fall-off effect.

An example in which the LED arrays **60** may be individually configured is shown in FIG. **5**. Here, the LED arrays **60** are divided into three general areas, which may be described as "addressable strings." Areas **1**, **3**, and **5** correspond to an addressable string configuration that may be included in the wider panels **10***a*, **10***c*, and **10***e*, while areas **2**, **4**, and **6** correspond to an addressable string configuration that may be included in the narrower panels **10***b* and **10***d*. The current to each area is adjusted in order to adjust the intensity of light emitting from each of the areas. For example, a higher current may be supplied to areas **1** and **2** than the current supplied to areas **3** and **4** such that areas **1** and **2** emit a higher intensity of light than areas **3** and **4**. Similarly, a higher current may be supplied to areas **3** and **4** than the current supplied to areas **5** and **6**. Thus, a higher intensity of light is emitted overall from the edges, which may allow for a reduction in any fall-off effect. Alternatively, the illuminator may be configured to adjust each individual diode present in a given LED array **60**, allowing for an even greater fine-tuning effect. Furthermore, by using either preprogrammed settings or sensors to detect the curvature of the surface to be treated, the LED arrays **60** can be individually configured to emit more intense light to only those areas that require it. This allows for an increase in uniformity of light exposure in an efficient manner as power output and/or light intensity is increased to only certain diodes, in accordance with need.

The addressable strings of the LED arrays **60** may also include varying amounts of individual diodes mounted within the particular area. For example, for the wider panels **10***a*, **10***c*, and **10***e*, 12 diodes may be mounted in each of areas **1**, while 9 diodes may be mounted in each of areas **3** and 41 diodes may be mounted in area **5**, resulting in a total of 83 individual diodes included within each of the wider panels **10***a*, **10***c*, and **10***e*. For the narrower panels **10***b* and **10***d*, 8 diodes may be mounted in each of areas **2**, while 9 diodes may be mounted in each of areas **4**, and 23 diodes may be mounted in area **6**, resulting in a total of 57 individual diodes included within each of the narrower panels **10***b* and **10***d*. However, the number and arrangement of diodes included within each of the LED arrays **60** is not particularly limited. For example, the wider panels **10***a*, **10***c*, and **10***e* may each contain a total amount of diodes that ranges from about 80 diodes to about 350 diodes. Similarly,

the narrower panels **10***b* and **10***d* may each contain a total amount of diodes that ranges from about 50 diodes to about 250 diodes. By varying the arrangement of the diodes within each of the addressable strings of the LED arrays **60**, power output and/or the intensity of light emitted from a given array may be better controlled and fine-tuned.

In addition, individually regulating power to the LED arrays **60** can also contribute to the reduction or elimination of the optical dead spaces that may otherwise occur at the hinge points. Specifically, power output and/or the emitted light intensity may be increased close to the edges of the array that are closest to the nested hinges to compensate for the lack of light emitting from the meeting point of panels. The narrower panels **10***b*, **10***d* are also preferably operated at a higher power level and/or at a higher emitted light intensity compared to the wider panels **10***a*, **10***c*, **10***e* in order to provide additional fill-in light. Furthermore, individual power regulation may aid in compensating for manufacturing variance that can occur in individual diodes. Finally, by fine-tuning each array **60**, the panels can be easily deployed for other applications as each array is specifically configurable to address the lighting needs of the specific application.

The illuminator may further include a timer, which can indicate to the user the appropriate length of exposure time for the particular treatment. The illuminator may also be programmed with pre-stored light dosing parameters to allow the user to select a desired treatment type. The pre-stored parameters may include, for example, pre-stored settings for exposure time, light intensity, and outputted wavelength. Based on the selected treatment, the illuminator is automatically configured to provide the correct lighting dosage by being supplied with the appropriate power output to achieve the required uniformity for the treatment. Alternatively, the illuminator can be provided with sensors that detect the size of the treatment area positioned in front of the illuminator. The sensors then determine the correct light dosing parameters based on the sensed treatment area. The illuminator may also further include actuators and may be programmed to be moved automatically depending on the selected treatment. Once a treatment is selected, the illuminator may be automatically positioned into the proper configuration by the actuators without requiring the user to move the system by hand. Alternatively, the sensors may detect the adjusted position of the illuminator manually set by the user. The detected position of the illuminator may then be used to indicate the intended treatment area. Correct light dosing parameters for the specific treatment area may then be provided based on the detected position set by the user.

The adjustable illuminator of the present invention allows for an infinite amount of configurations that can be adapted for the targeted treatment area. The configurations may range from a flat-plane emitter (as shown in FIGS. **1**B and **2**B) to a substantially U-shaped configuration (as shown in FIGS. **1**A and **2**A). The adjustable illuminator may also be configured such that the two end panels **10***a*, **10***e* can be pulled back relative to the three middle panels **10***b*, **10***c*, **10***d*, such that a smaller U-shaped configuration may be created by the middle panels. Thus, the adjustable illuminator allows for the treatment of additional areas of a patient's body. In other words, not only can the adjustable illuminator effectively deliver a uniform light intensity to traditional surfaces such as the face or scalp, but the adjustable illuminator can also provide a device that can easily be configured to treat other portions of a patient's body, in particular, those having smaller curved surfaces, such as the arms and legs. Moreover, the adjustable illuminator may also be easily positioned to deliver a uniform light intensity to larger treatment areas, such as the back or chest.

As described above, the narrower panels **10***b*, **10***d* are dimensioned such that the panels act as "lighted hinges." Thus, when the wider panels **10***a*, **10***c*, **10***e* are adjusted into the desired form, the illuminator "bends" at the narrower panels **10***b*, **10***d*, where traditionally the "bend" would occur substantially at the hinge itself. Thus, instead of an unlighted "bent" portion as would occur in the conventional illuminator, the present illuminator provides a "bent" portion that is also configured to emit light, thereby helping to reduce optical dead space without requiring large amounts of power differentiation among the light sources of each panel to provide the required fill-in light. The effects of this configuration can be best seen in a comparison of FIGS. **7** and **8**. FIG. **7** illustrates the light uniformity produced by a conventional illuminator, measured with a cosine response detector, which mimics the response of a patient's skin to the incident of light as described above, at a distance of two inches. Total light dose, in terms of J/cm^2, was measured based on emitted irradiance (W/cm^2) over time (in seconds). The targeted treatment area shown is a patient's head, where height is shown as the y-axis and rotation angle from the center of the emitting surface is shown as the x-axis. As can be seen in FIG. **7**, higher light doses of about 10 J/cm^2 occur at the center of the face (for example, at region A), near the patient's nose, where the patient is facing closest to, and substantially perpendicular to, the middle-most panel. Total light dose then begins to drop as movement away from the center of the face occurs where the effects of cosine "fall-off" and optical dead spaces are more prevalent. For example, light dose is reduced by about 20% at the patient's cheek areas (for example, at region B), and by about 80% toward the outer boundaries of the patient's face (for example, at region E), such as the ears and forehead. Thus, as shown in FIG. **7**, conventional adjustable illuminators utilizing equally-sized panels operating at the same power output level produce a varying field of light uniformity, making it undesirable and ineffective for those treatments requiring highly specific light uniformity.

FIG. **8**, on the other hand, illustrates the light uniformity produced by an embodiment of the present invention. The targeted treatment area is the same as that measured in FIG. **7**. However, compared to FIG. **7**, the light output uniformity produced by the illuminator is greatly enhanced across the patient's face and exhibits little to no deviation from the light output measured in the center of the patient's face to the light output measured at the edges of the patient's face. For example, as shown in FIG. **8**, total light doses of about 10 J/cm^2 (for example, at region A') occur across all regions of the face, including the center of the face (for example, the patient's nose), the patient's check areas, and the outer boundaries of the patient's cheek areas, such as the ears and forehead. Moreover, total light dose drops off minimally (for example, at region B') at the extreme outer boundaries of the patient's face. In one embodiment, the measured output over the active emitting area (over the entire active emitting area) is within 60% of the measured maximum (over the entire active emitting area) measured with a cosine response detector over all operation distances. More preferably, the measured output over the emitting area is within 70% of the measured maximum over a distance of two and four inches. Even more preferably, the measured output over the emitting area is within 80% of the measured maximum over a distance of two and four inches.

One example of a treatment method for precancerous lesions, such as actinic keratosis, by PDT utilizing an adjustable illuminator described above in conjunction with ALA will now be described.

Essentially anhydrous ALA is admixed with a liquid diluent just prior to its use. The ALA admixture is topically applied to the lesions using a point applicator to control dispersion of the ALA admixture. After the initial application of the ALA admixture has dried, one or more subsequent applications may be similarly applied. Approximately 2 mg/cm^2 of ALA is administered. Formation of photosensitive porphyrin and photosensitization of the treated lesions occurs over the next 14-18 hours, during which time exposure to direct sunlight or other bright light sources should be minimized. Between 14 and 18 hours after administration of the ALA, the lesions are irradiated by the adjustable illuminator according to the present invention. The illuminator irradiates the lesions with a uniform blue light for a prescribed period. According to a preferred treatment, the visible light has a nominal wavelength of 417 nm. The illuminator may irradiate the lesions with a uniform red light for a prescribed period. In certain embodiments, the illuminator irradiates the lesions with a uniform blue light for a first prescribed period and then irradiates the lesions with a uniform red light for a second prescribed period. For example, in some embodiments, the illuminator is configured to irradiate the lesions with a uniform blue light (e.g., 417 nm) at a low intensity (e.g., about 0.1 J/cm^2 to about 2 J/cm^2) to photobleach, for example, protoporphyrin IX (PpIX) present at the surface of the patient's skin, and irradiate the lesions with a uniform red light (e.g., 635 nm) at a high intensity (e.g., about 30 J/cm^2 to about 150 J/cm^2) to activate PpIX present at deeper layers of the patient's skin, thus avoiding potential damage to the upper layers of the patient's skin. The illuminator may be configured to simultaneously irradiate the patient's skin with the low intensity blue light and the high intensity red light or sequentially irradiate the patient's skin with the low intensity blue light and the high intensity red light. In certain embodiments, the illuminator is configured to irradiate the patient's skin with the low intensity blue light for about one hour to about three hours and irradiate the patient's skin with the high intensity red light for about 20 minutes to about 30 or 40 minutes, either at the same time the patient's skin is irradiated with the low intensity blue light or after the patient's skin has been irradiated with the low intensity blue light.

The invention thus provides a method for photodynamically diagnosing or treating a contoured surface of a patient, which includes providing the adjustable illuminator described above, placing the patient in the illuminator, and illuminating the patient to diagnose or treat the patient. The patient may be illuminated to treat actinic keratosis, acne, photo-damaged skin, cancer, warts, psoriasis, or other dermatological conditions. The method may also be used to remove hair and diagnose cancer.

Since the total light dose (J/cm^2) is equal to irradiance (W/cm^2) multiplied by time (sec), the only additional parameter that needs to be controlled for delivery of the correct treatment light dose is exposure time. This may be accomplished by the timer described above, which can control the electrical power supplied to the LED arrays **60** appropriately, and which can be set by the physician. Data has shown that 10 J/cm^2 delivered from a source with an irradiance density of 10 mW/cm^2, or an irradiance density of about 9.3 to about 10.7 mW/cm^2, produces clinically acceptable results for desired treatment areas (e.g., face, scalp, extremities). From the equation above, this light dose will require an exposure time of 1000 seconds (16 min. 40 sec). In addition, due to the addressable nature of the adjustable illuminator, the illuminator may be used to treat a patient at higher power such that less time is required for effective treatment. For example, the adjustable illuminator may deliver an irradiance density of 20 mW/cm^2 for an exposure time of 500 seconds (8 min. 20 sec) to deliver a clinically acceptable light dose of 10 J/cm^2. Alternatively, the adjustable illuminator may include higher power ranges, such as 30 mW/cm^2, over an exposure time resulting in a light dose of 10 J/cm^2. A selected light dose may also be administered by additionally or alternatively varying the irradiance density over treatment time.

Additional advantages and modifications will readily occur to those skilled in the art. Therefore, the invention in its broader aspects is not limited to the specific details and representative devices and methods, shown and described herein. Accordingly, various modifications may be made without departing from the spirit and scope of the general inventive concept as defined by the appended claims and their equivalents.

What is claimed is:

1. A method, comprising:

administering 5-aminolevulinic acid (ALA) to a patient;

positioning an illuminator proximate to the patient, the illuminator comprising at least five panels, each of the panels comprising at least one light source, the at least five panels connected by a plurality of hinges on inner side surfaces of adjacent panels that connect panels together such that joints of the hinges are substantially flush with front surfaces of adjacent panels; and

illuminating a surface of the patient with the illuminator, wherein the at least five panels comprise a first panel between two panels that are greater in width than the first panel.

2. A method as set forth in claim **1**, wherein the surface of the patient includes a surface affected by actinic keratosis.

3. A method as set forth in claim **1**, wherein the surface of the patient includes a surface affected by acne.

4. A method as set forth in claim **1**, wherein the panels are configurable in a U shape or in a substantially flat shape.

5. A method as set forth in claim **1**, wherein outermost panels are configurable to be substantially parallel.

6. The method of claim **1**, wherein illuminating the surface comprises emitting light having a wavelength from 400 nanometers to 430 nanometers.

7. The method of claim **1**, wherein administering ALA to the patient comprises topically applying ALA.

8. The method as set forth in claim **1**, wherein the surface of the patient includes a surface affected by cancer.

9. A method, comprising:

administering 5-aminolevulinic acid (ALA) to a patient;

positioning an illuminator proximate to the patient, the illuminator comprising at least five panels, each of the panels comprising at least one light source, the five panels comprising three panels having a first width and two panels that are narrower in width than the three panels having the first width; and

illuminating a surface of the patient with the illuminator.

10. A method, comprising:

administering 5-aminolevulinic acid (ALA) to a patient;

positioning an illuminator proximate to the patient, the illuminator comprising at least five panels, each of the panels comprising at least one light source, wherein the panels comprise first panels having a first width and at least one second panel having a second width narrower

than the first width, the panels being connected by hinges disposed to reduce optical dead space between the panels; and

illuminating skin of the patient with the illuminator.

11. The method of claim **10**, further comprising selectively controlling the light sources to increase intensity of light from light sources from at least one portion of the illuminator to be greater than that from another portion of the illuminator to compensate for optical fall-off.

12. The method of claim **10**, further comprising selectively controlling at least one of power output to or light intensity of the light sources from a portion of the illuminator to increase the at least one of power output to or light intensity of light sources closest to hinges to be greater than that from another portion of the illuminator.

13. The method of claim **10**, further comprising controlling the at least one second panel having the second width to operate at a higher power level and/or a higher light intensity than at least one of the first panels having the first width.

14. The method of claim **10**, further comprising regulating power output to individual panels of the illuminator.

15. The method of claim **10**, further comprising controlling the illumination based on one or more of an exposure time, light intensity, or outputted wavelength.

16. A method, comprising:

administering 5-aminolevulinic acid (ALA) to a patient;

positioning an illuminator proximate to the patient, the illuminator comprising at least five panels, each of the panels comprising at least one light source, the at least five panels connected by a plurality of hinges on inner side surfaces of adjacent panels that connect panels together, at least one of the inner side surfaces having a recess to accommodate therein at least part of one of the hinges; and

illuminating a surface of the patient with the illuminator,

wherein the at least five panels comprise two panels having a first width and three panels greater in width than the two panels having the first width arranged alternatingly.

17. A method as set forth in claim **16**, wherein the part comprises a flange.

18. A method as set forth in claim **16**, wherein the part comprises a hinge joint.

* * * * *