US 20110209741A1

(19) United States

(12) Patent Application Publication

Solon

(10) Pub. No.: US 2011/0209741 A1

(43) Pub. Date: Sep. 1, 2011

(54) **SOLAR ENERGY WIRE HARNESS WITH IN-LINE FUSES**

(76) Inventor: **Dean Solon**, Gallatin, TN (US)

(21) Appl. No.: **12/714,855**

(22) Filed: **Mar. 1, 2010**

Publication Classification

(51) **Int. Cl.**

H01L 31/042	(2006.01)
H02G 3/04	(2006.01)
H02B 1/20	(2006.01)

(52) **U.S. Cl.** ..... **136/244**; 174/72 A; 361/826

(57) **ABSTRACT**

A wire harness connects multiple solar panel junction boxes to a recombiner box. The wire harness includes in-line fuse assemblies, with optional blocking diodes, so each string of solar panels is associated with one fuse. In the event of a blown fuse, only one upstream solar panel string is affected. Entire wire harnesses and/or individual in-line fuse assemblies can be easily swapped out, thereby decreasing the time and expense of troubleshooting and repairing.

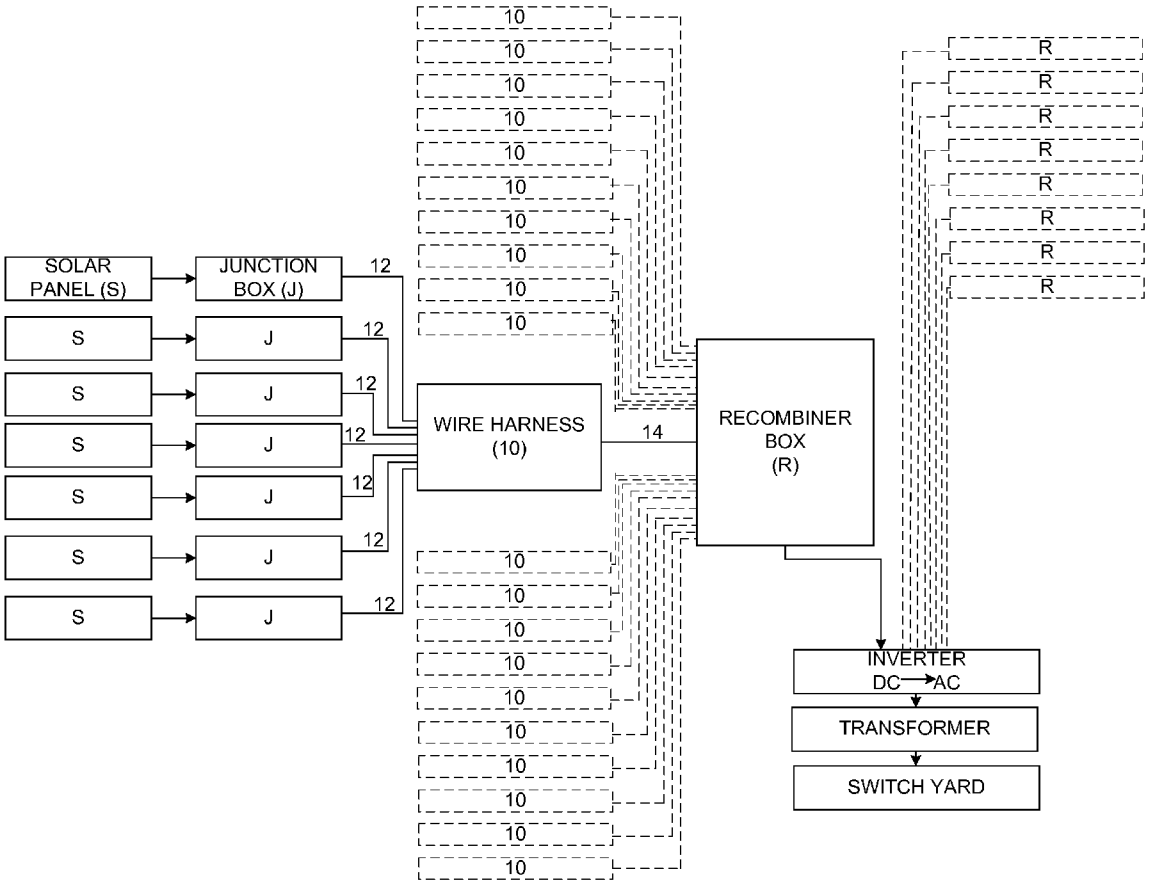

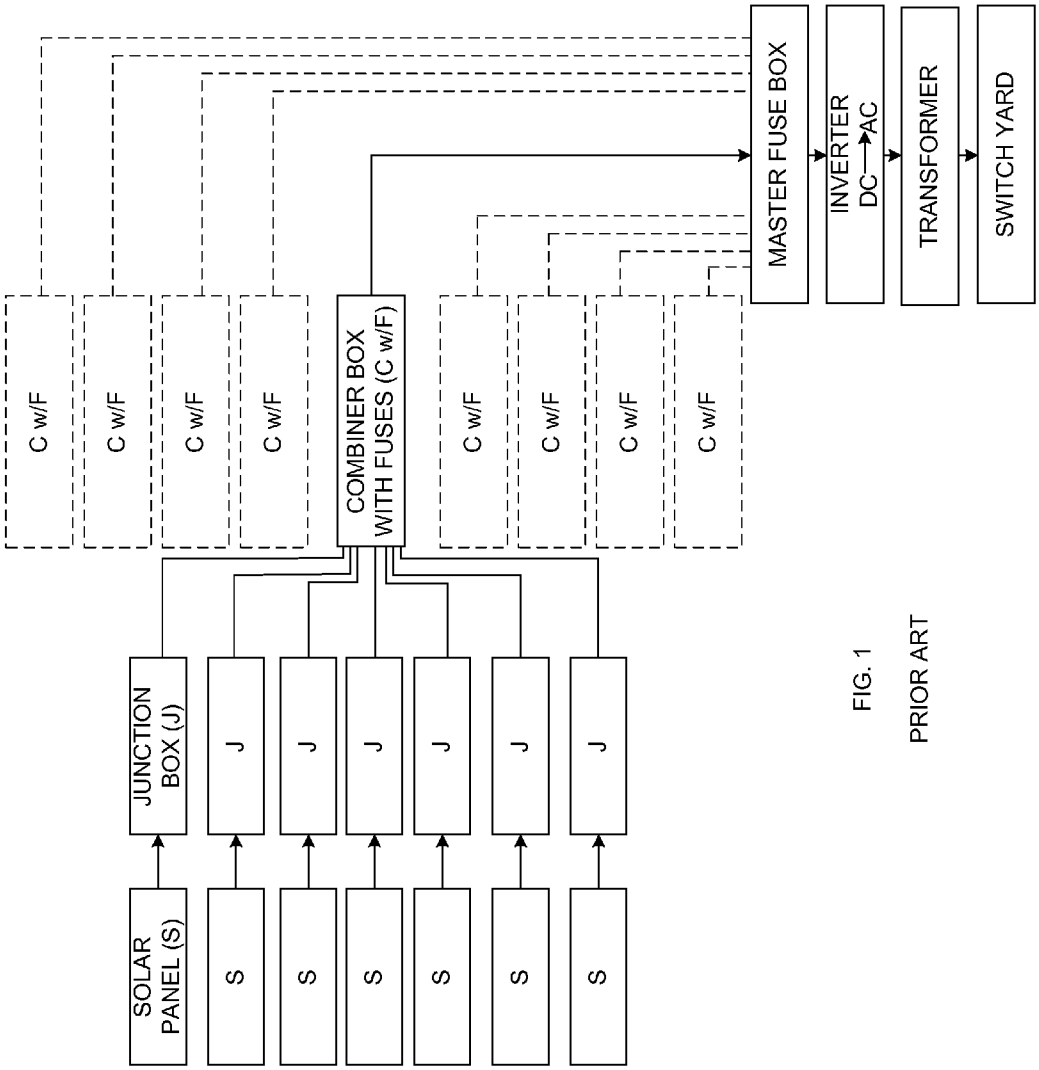

FIG. 1
PRIOR ART

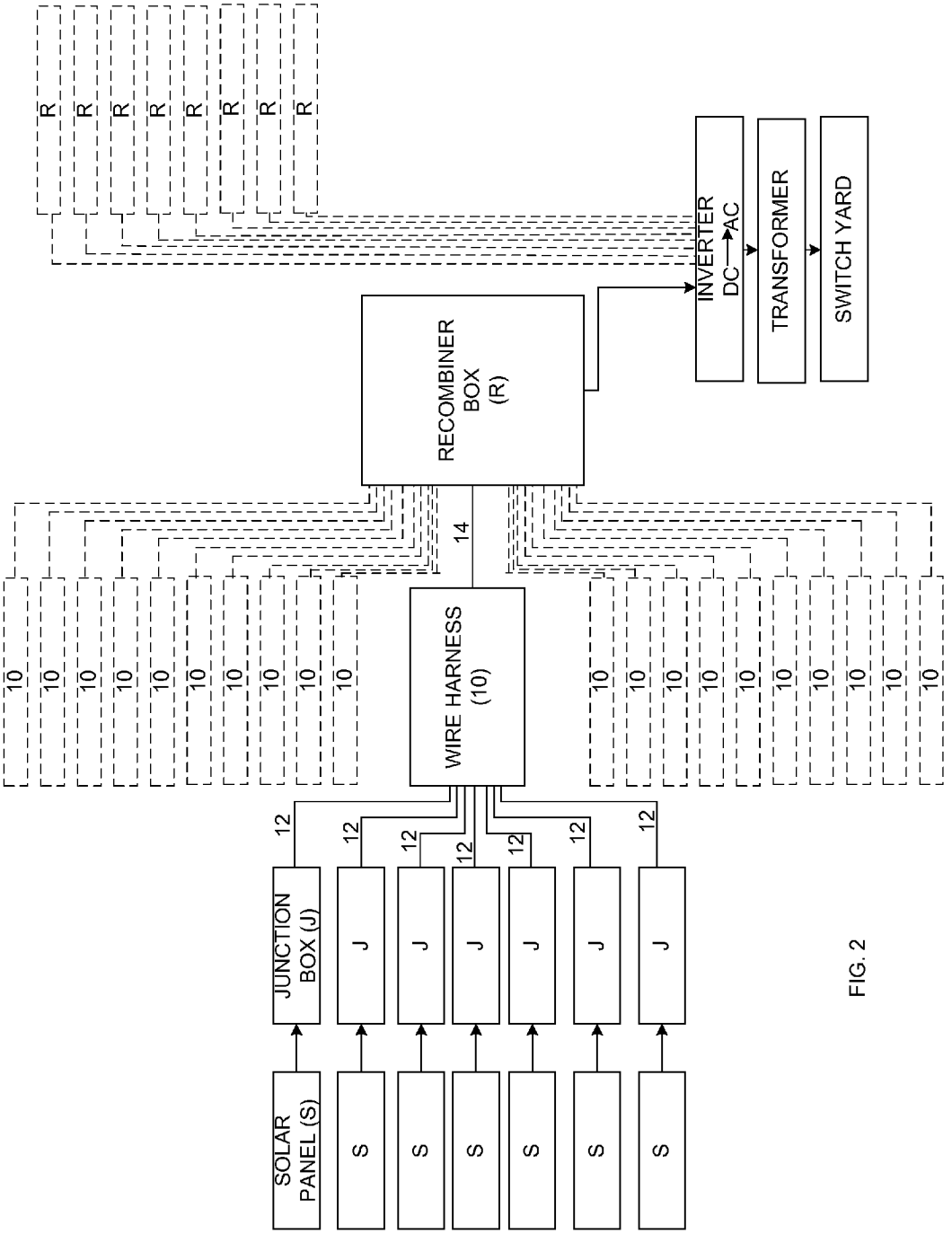
SOLAR PANEL (S)
JUNCTION BOX (J)
S
J
12
WIRE HARNESS (10)
10
14
RECOMBINER BOX (R)
R
INVERTER DC→AC
TRANSFORMER
SWITCH YARD

FIG. 2

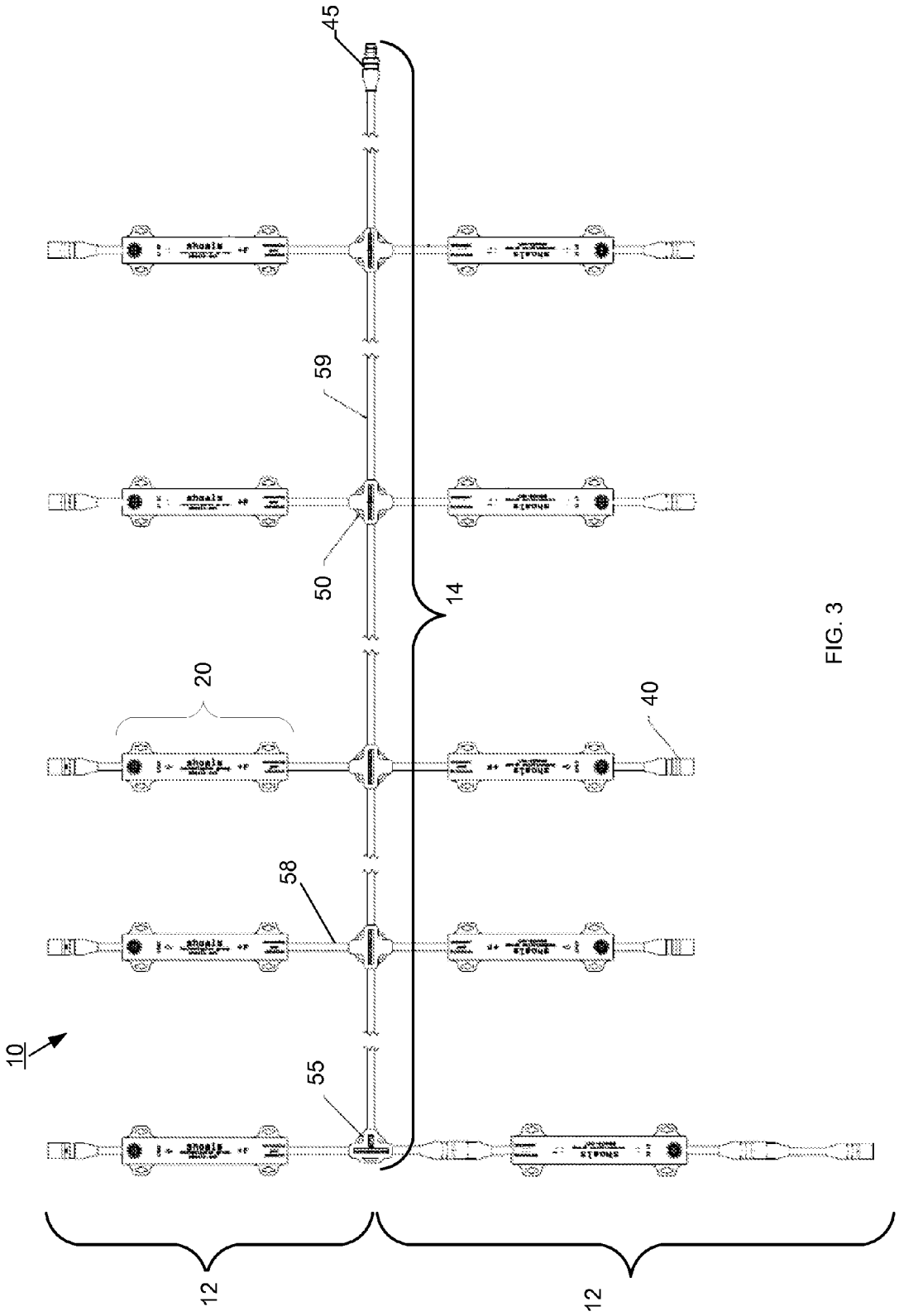

FIG. 3

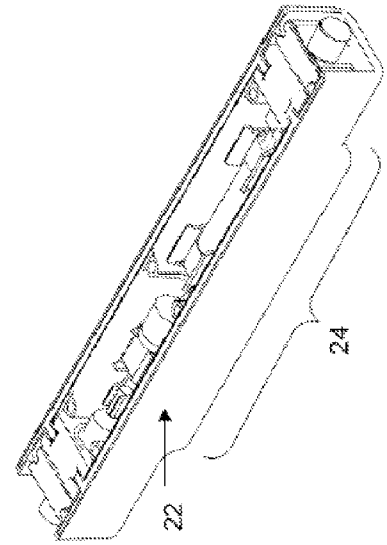

FIG. 4B

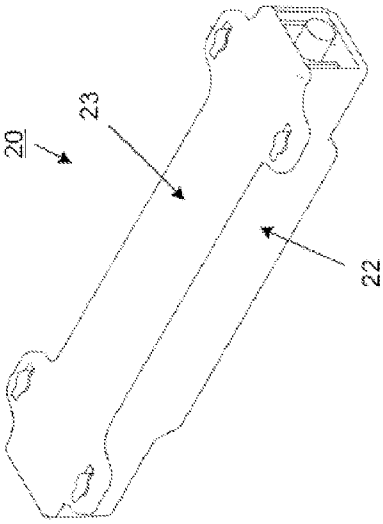

FIG. 4A

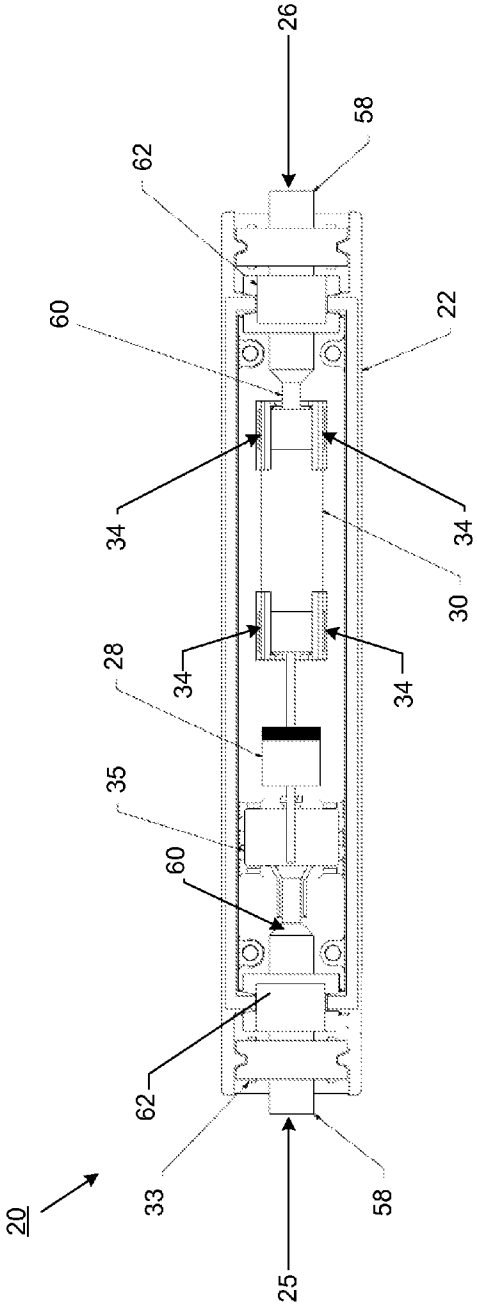

FIG. 5

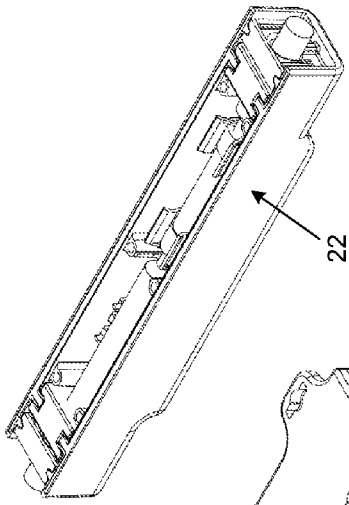

FIG. 6B

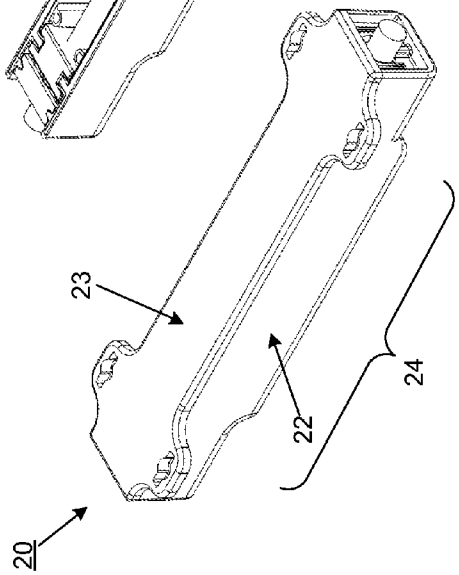

FIG. 6A

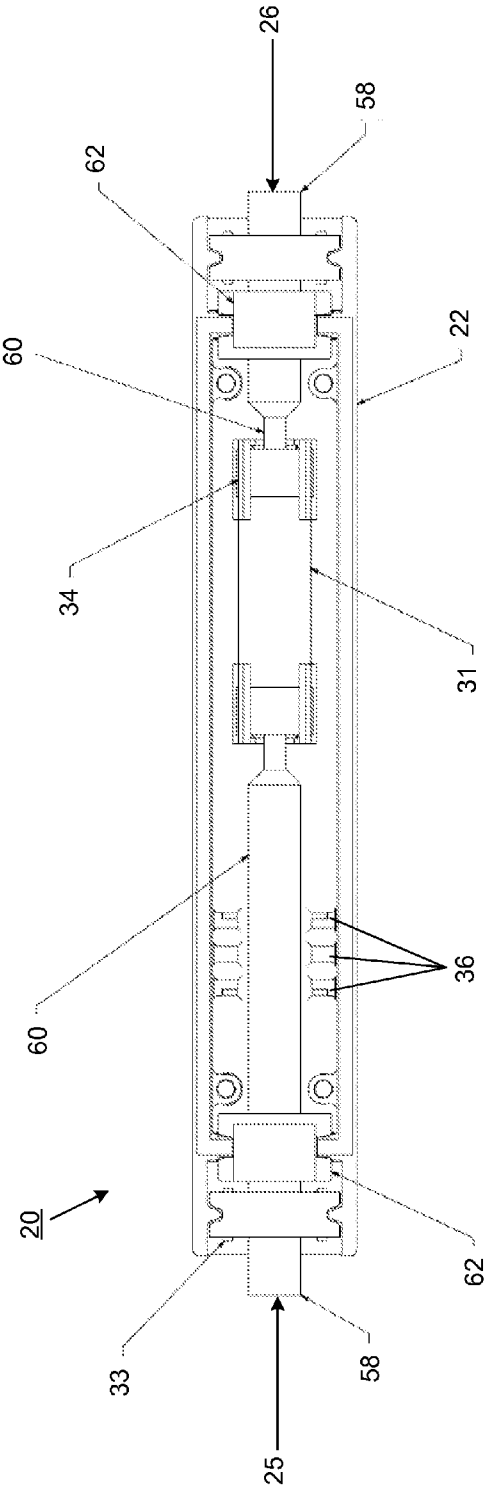

FIG. 7

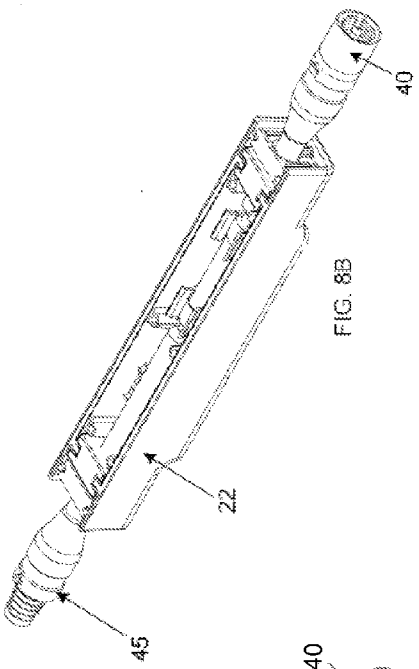

FIG. 8B

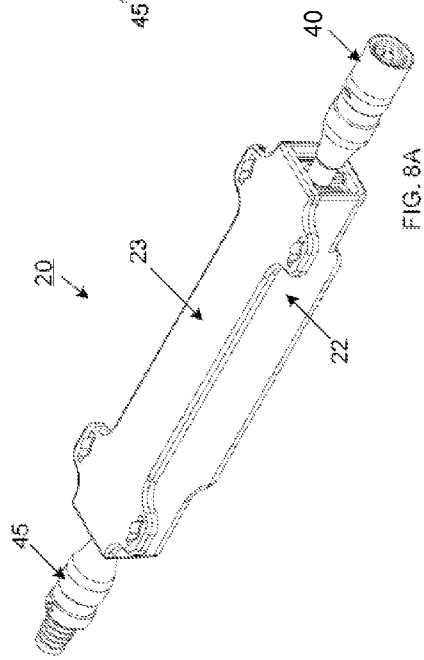

FIG. 8A

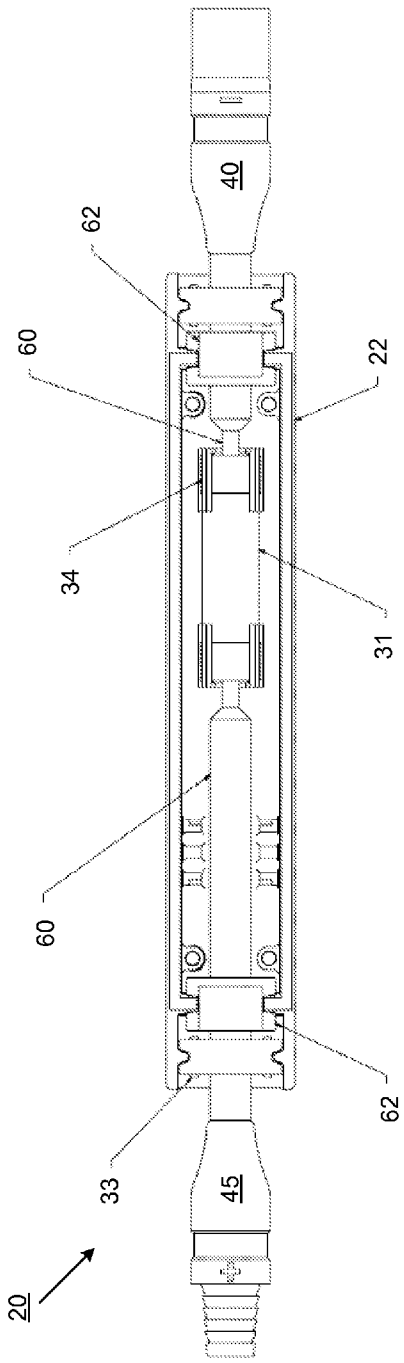

FIG. 9

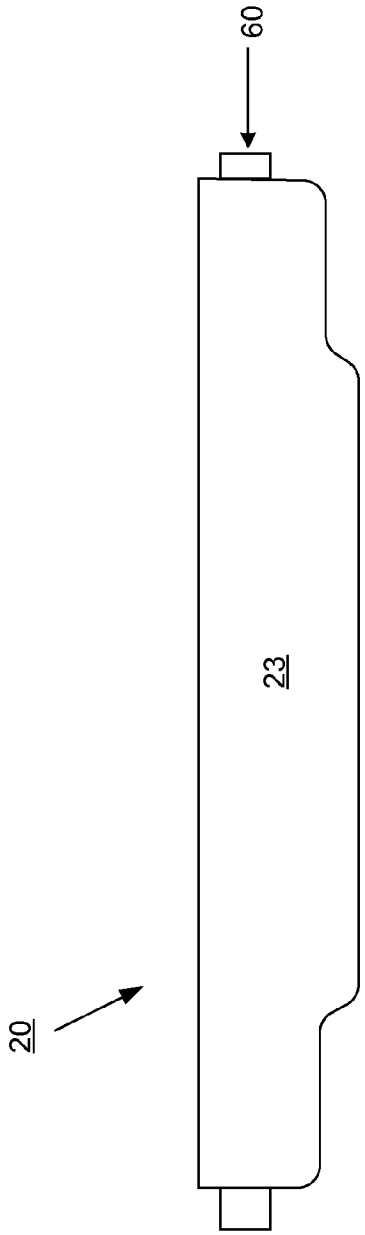

FIG. 10

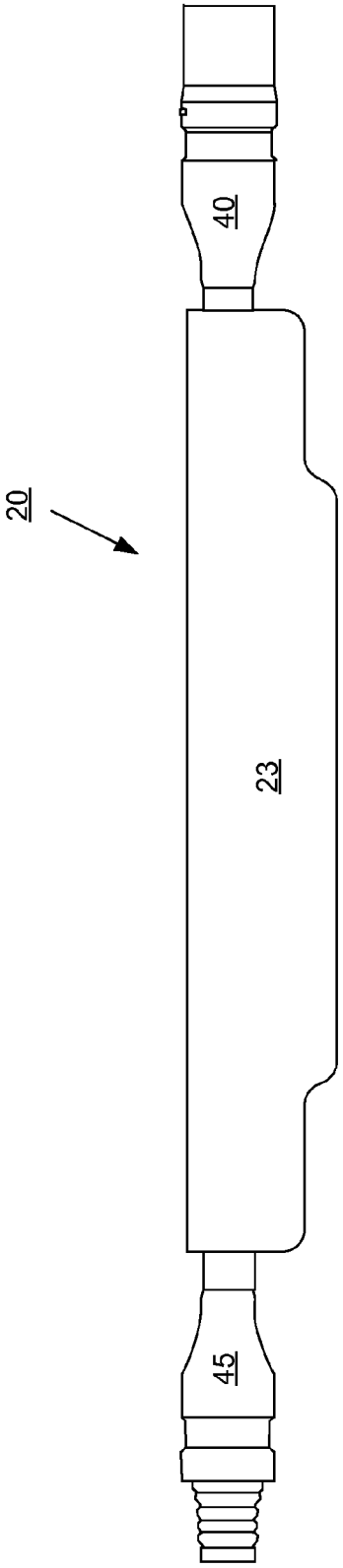

FIG. 11

SOLAR ENERGY WIRE HARNESS WITH IN-LINE FUSES

BACKGROUND

[0001] (1) Field

[0002] The present invention relates generally to components used in the solar energy industry and, more particularly, to wire harnesses with in-line fuses for electrically coupling solar panel junction boxes to recombiner boxes.

[0003] (2) Related Art

[0004] The problems associated with the world's dependence on non-renewable resources have resulted in increased attention to so-called alternative energy, such as solar and wind power. As a result, small-scale production of alternative energy, for example by installing residential solar heaters or wind turbines, has become more popular. While these actions may provide psychological and possible long-term financial benefits, the actual contribution to the power grid is minimal. Permanent and significant changes necessitate the implementation of alternative energy generation on a large-scale utility basis.

[0005] Utility scale production of solar energy, however, is often considered financially imprudent given the high cost of materials, know-how, and labor. For example, conventionally wiring solar panels typically requires a qualified electrician to measure, cut, connect and crimp wires on site, by hand, between each individual solar panel's junction box and the combiner box that conventionally contains the fuses. In addition, the resulting combiner box is a confusing array of electronics that often requires extensive labor and expense for troubleshooting and repairing. Also, a blown fuse will result in the shut down of an array of solar panels, thus decreasing the productivity of the system.

[0006] Accordingly, the interests of being environmentally responsible often conflict with the financial realities of building and maintaining a solar energy plant.

[0007] Thus, there remains a need for components for use in solar plants that decrease the materials, know-how and/or labor associated with building and maintaining the electrical infrastructure.

[0008] There also remains a need for components for use in solar plants that are easily identified as problematic, and replaced, in the event of a failure.

[0009] A need also exists for components that prevent the loss of energy in the event of a failure.

[0010] Moreover, a need exists for a solar wiring architecture which does not shut down more solar panels than necessary in the event of a failure.

[0011] Ideally, these components are relatively simple, safe and inexpensive to manufacture, transport and use.

[0012] Methods of using the aforementioned components, and creating the aforementioned architecture, are also needed.

SUMMARY OF THE INVENTIONS

[0013] The present inventions are directed to wire harnesses for electrically connecting multiple solar panel junction boxes to a recombiner box. The wire harnesses are capable of handling high voltage, low current power, and can be configured in a variety of ways. Each branch of a wire harnesses connects to the junction box of a solar panel, with each of the branches including an in-line fuse assembly. The multiple branches of the wire harness feed into a common wire harness trunk. The terminal end of each branch and trunk includes a positive or negative connector, to facilitate easy installation or replacement by mating with a corresponding connector on a junction box or recombiner box. The in-line fuse assembly may include a variety of fuse types, such as midget fuses and/or 1000V fuses, and may optionally include a blocking diode. The in-line fuse assembly may also include connectors, so that individual fuses may be swapped out in the event a fuse is blown, versus replacing the entire wire harness. One of the advantages of this invention over conventional wiring is that the fuses are not in the combiner box. Accordingly, when a fuse is blown, only one solar array is affected. When a fuse of a conventional combiner box is blown, all panels downstream from that fuse are affected.

BRIEF DESCRIPTION OF THE DRAWING

[0014] FIG. **1** schematically represents a conventionally wired solar energy system;

[0015] FIG. **2** schematically represents a solar energy system wired according to the present invention;

[0016] FIG. **3** depicts a wire harness of the present invention;

[0017] FIG. **4** is a perspective view of an in-line fuse assembly with diode, with the lid intact (A) and removed (B);

[0018] FIG. **5** is the top view of an in-line fuse assembly with diode, without a lid;

[0019] FIG. **6** is a perspective view of an in-line fuse assembly, with the lid intact (A) and removed (B);

[0020] FIG. **7** is the top view of an in-line fuse assembly, without a lid;

[0021] FIG. **8** is a perspective view of an in-line fuse assembly with connectors, with the lid intact (A) and removed (B);

[0022] FIG. **9** is the top view of an in-line fuse assembly with connectors, without a lid;

[0023] FIG. **10** is a side view of an in-line fuse assembly; and

[0024] FIG. **11** is a side view of an in-line fuse assembly with connectors.

DESCRIPTION OF THE PREFERRED EMBODIMENTS

[0025] In the following description, like reference characters designate like or corresponding parts throughout the several views. It should be understood that the illustrations are for the purpose of describing a preferred embodiment of the inventions and are not intended to limit the inventions thereto.

[0026] A "big picture" presentation of a solar energy plant according to the present invention is depicted in FIG. **2**. Following the flow of energy, the major components are the solar panels S, junction boxes J, wire harnesses **10**, recombiner boxes R, inverter (DC to AC), transformer, and switch yard. Each solar panel S is connected to a junction box J, which may be integrated or separate. Each junction box J is in communication with one branch **12** of wire harness **10** (see FIG. **3**), typically with 6-12 branches, and 12 branches per wire harness being preferred. Each wire harness has one trunk **14**, which is in communication with a recombiner box R.

[0027] Recombiner box R preferably accommodates 12-24 trunks **14**, corresponding with 12-24 individual wire harnesses **10**, as schematically represented in FIG. **2** as "phantom" wire harnesses **10**. Recombiner box R is in communication with an inverter, preferably with 6 gauge wire. The

inverter preferably accommodates 8-10 recombiner boxes R, as indicated by the "phantom" recombiner boxes R connected to the inverter.

[0028] Conventionally, combiner boxes contain fuses (C w/F), as shown in FIG. **1**. In the present invention, however, fuses are upstream of the "combiner box" (recombiner box R), in wire harnesses **10**. Accordingly, recombiner box R of the present invention is preferably devoid of fuses.

[0029] Referring now to FIG. **3**, wire harness **10** includes a plurality of branches **12** feeding into one trunk **14**. Preferably branches **12** are constructed of 10 or 12 gauge photovoltaic wire, with Southwire of Carrolton, Ga. being most preferred, and trunks **14** are constructed of 10 or 8 gauge photovoltaic wire, with Southwire of Carrolton, Ga. being most preferred. Branches **12** preferably terminate in connectors, with negative connectors **40** being most preferred. Trunk **14** preferably terminates in a connector, with positive connector **45** being most preferred. Branches **12** connect to trunk **14** with cross joints **50**, or tee joints **55**, with the former uniting four wires and the latter uniting three. These joints are disclosed in U.S. patent application Ser. No. 12/502,395, which was filed Jul. 14, 2009, and issued into patent Ser. No. _____, on _____, which is incorporated herein in its entirety. Various combinations of joints and connectors are capable of yielding a variety of wire harness **10** configurations. These various configurations are within the scope of the present invention.

[0030] Branches **12** of wire harness **10** each include one in-line fuse assembly **20**, so wire harness **10** includes a plurality of in-line fuse assemblies **20** connected to branch wire **58**, which is preferably photovoltaic wire. These assemblies **20** are separated one-from-another by cross joints **50** or tee joints **55**. Wire harness **10** is capable of withstanding high voltage, low current power. As used herein, "high voltage, low current power" means a voltage between 500V and 1500V, and a current between 2 A and 60 A; with voltage and current between 600V and 1200V, and 2 A and 30 A, respectively, being more preferred; and between 600V and 1000 B, and 2 A and 20 A being most preferred.

[0031] FIGS. **4-5** depict one embodiment of in-line fuse assembly **20**, the in-line fuse assembly with a diode. Specifically, referring to FIG. **4**A, assembled in-line fuse assembly **20** is encased on three sides by housing **22**, and covered on a fourth side by lid **23**. When lid **23** is removed, FIG. **4**B, the structure of the various components are visible within housing **22**. Preferably, lid **23** and housing **22** are constructed of polypropylene, by conventional methods such as injection molding. Preferably housing **22** is approximately 138.5 mm long, 22.0 mm tall including flange **24**, 17.0 mm tall not including flange **24**, 22 mm wide, and having walls 2.0 mm thick. Preferably lid **23** is 138.5 mm long, 3 mm tall, 41 mm wide. In constructing in-line fuse assembly **20**, it is desirable to construct the device within housing **22**, then position lid **23** to encase the assembly. Housing **22** and lid **23** are preferably held together by ultrasonic weld or screws. Other embodiments of in-line fuse assembly **20**, with and without lid **23**, are similarly depicted in FIGS. **6**A, **6**B, **8**A and **8**B.

[0032] Turning now to FIG. **5**, this embodiment of in-line fuse assembly **20** includes, from left to right, input **25** constructed of assembly wire **60**, which is held in position by wire clip **33**, which is integrated into the housing **22**. As with all embodiments, assembly wire **60** may be the same as branch wire **58**, except it is considered directly associated with in-line fuse assembly **20**. Preferably assembly wire **60** is 10 or 12 gauge, with Southwire of Carrolton, Ga. being most preferred. In this embodiment, a "stub" of branch wire **58** is attached to assembly **20** via wire grommet **62**, with assembly wire **60** in communication with crimp connector **35**, and blocking diode **28**. Diode **28** preferably has an ampacity of 2 to 30 amps, and is commercially available as P600 from Vishay of Shelton, Conn.

[0033] Downstream from diode **28** in the embodiment is midget fuse **30**, which is held in position by fuse clips **34**, which are integrated with housing **22**. Midget fuse **30** preferably has an ampacity of 2 to 30 amps, and is commercially available as an ATM fuse from Ferraz-Shawmut of Newburyport, Mass. Grommet **62** locates assembly wire **60**, which connects to midget fuse **30** by fuse clip **34**, and is output **26** of assembly **20**. Grommets **62** protect housing-**22** and lid-**23** encased assembly **20** from ambient.

[0034] The in-line fuse with diode embodiment, as depicted in FIGS. **4** and **5**, as well as other embodiments discussed herein, provide multiple structural differences and functional advantages over conventional solar industry components. Specifically, by employing a wire harness versus conventional hard wiring, the labor costs and failure rates are significantly decreased. This is because a trained technician can plug in the appropriate parts, versus an electrician performing conventional hard wiring methods. Also, when fuse **20** needs to be replaced, it is possible to simply isolate and swap out a bad fuse for a good one on harness **10**, rather than dealing with the combiner box C w/f, which can be more difficult to diagnose, and more hazardous and complex. By positioning fuse **20** upstream of recombiner box R, one blown fuse merely shuts off power flowing from the single associated solar panel S, versus shutting down power flowing from all solar panels connected to the portion of the associated recombiner box. This drastically decreases the negative impact of "down time", thereby improving the efficiency of the total solar field. Also, the master fuse box is eliminated, thereby simplifying and cutting costs. Moreover, by providing a blocking diode, energy can not reverse the flow and drain power from the system.

[0035] FIGS. **6-7** depict another embodiment of in-line fuse assembly **20**, the in-line fuse assembly without a diode. This embodiment is similar to the embodiment of FIGS. **4-5**, except that it doesn't have crimp connector **35** or diode **28**. Assembly wire **60** is longer, and can include 1000V fuse **31**, which is commercially available as DCT series from Ferraz-Shawmut of Newburyport, Mass.

[0036] FIGS. **8-9** set forth yet another embodiment of in-line fuse assemblies **20**, the in-line fuse assembly with connectors. By including negative connector **40** and positive connector **45**, it is possible to easily "swap out" in-line fuse assembly **20** in the field, in the event of a blown fuse or other failure. Although FIGS. **8**B and **9** depict assembly **20** without diode **28**, it is possible to include diode **28**, depending on the requirements. The bottom left branch **12** of FIG. **3** illustrates the embodiment of an in-line fuse assembly **20** including connectors **40**, **45** used in wire harness **10**.

[0037] Referring back to FIG. **2**, in use, one would electrically connect junction box J of solar panel S to recombiner box R by plugging, for example, negative connector **40** (shown in FIG. **3**) at distal end of branch **12** of wire harness **10** into junction box J. Similarly, each branch **12** of wire harness **10** would be plugged into a different junction box J, with each junction box J associated with one solar panel S. Positive connector **45** of trunk **14** would connect to central recombiner box R. In this manner, a plurality of solar panels S, with an

equal number of junction boxes J, would be connected by an equal number of branches **12** to trunk **14**. Trunk **14** would be electrically connected to recombiner box R. In this manner, the number of trunks **14** would equal the number of wire harnesses **10**. The solar panel S would be positioned to collect solar energy. Wire harnesses **10** would include at least one in-line fuse assembly **20**, with each in-line fuse assembly including a fuse, for example midget fuse **30** or 1000V fuse **31**, and optionally diode **28**. Negative connector **40** and/or positive connector **45** could also be employed to provide "plug and play" functionality. When the embodiment including connectors (FIGS. **8** and **9**) is used, it might not be necessary to unplug wire harness **10** from junction box J when in-line fuse assembly **20** requires replacement. Rather, in-line fuse assembly **20** could be "swapped out" for a replacement in-line fuse assembly.

[0038] By way of working example, a solar energy field using in-line fuse assembly **20** could be set up as follows: 2304 solar panels are connected to 16 recombiner boxes, primarily using the in-line fuse assembly, which is generally depicted in FIG. **5**, which is commercially available as the STG-SHP-2X12P.M3 wire harness assembly from Shoals Technologies Group of Portland, Tenn. Accordingly, each wire harness assembly includes eight branches **12** feeding into each trunk **14**. The solar panel/junction box assemblies are commercially available from Sharp Electronics Corporation of Huntington Beach, Calif. as NA-128H5, and the recombiner boxes are commercially available from Blue Oak PV Products of Davis, Calif. as HCB12. Branches **12** and trunk **14** are constructed of 10 and 10 gauge wire, respectively. The output of the recombiner flows directly to the DC-to-AC inverter. In this manner, each branch **12** carries a maximum of 1000V and 2 A, and each trunk **14** carries a maximum of 1000V and 16 A, the total maximum output per recombiner box is 1000 V and 192 A, and the total maximum output of the DC-to-AC inverter is 3 MW. In the event one solar panel P stops collecting energy, or fuse **30** or **31** is blown, the entire system output would only be decreased by 2 A, or 0.06%.

[0039] Certain modifications and improvements will occur to those skilled in the art upon a reading of the foregoing description. By way of example, the fuse only version can be placed in a shorted housing. It should be understood that all such modifications and improvements have been deleted herein for the sake of conciseness and readability but are properly within the scope of the following claims.

I claim:

1) A wire harness for high voltage, low current power, said wire harness including:

a) photovoltaic wire;

b) a plurality of in-line fuse assemblies connected to said photovoltaic wire; and

c) a plurality of joints separating said in-line fuse assemblies one-from-another.

2) The wire harness of claim **1** wherein at least one of said in-line fuse assemblies includes a blocking diode.

3) The wire harness of claim **1** further including at least one negative connector engaged with said photovoltaic wire.

4) The wire harness of claim **1** wherein said plurality of joints includes at least one cross or tee joint.

5) The wire harness of claim **1** wherein at least one of said in-line fuse assemblies includes a 2-20 amp fuse.

6) The wire harness of claim **1** wherein one of said in-line fuse assemblies includes a 600V or 1000V DC fuse.

7) The wire harness of claim **1** wherein said in-line fuse assemblies each include a protective housing.

8) The wire harness of claim **1** wherein said photovoltaic wire is between 8 gauge and 12 gauge.

9) A wiring arrangement for solar power installations, said arrangement including:

a) a solar panel;

b) a junction box in communication with said solar panel;

c) a wire harness in communication with, and downstream of, said junction box, said wire harness including a plurality of in-line fuses; and

d) a recombiner box in communication with, and downstream of, said wire harness.

10) The wiring arrangement of claim **9** further comprising an inverter in communication with, and downstream of, said recombiner box.

11) The wiring arrangement of claim **10** further comprising photovoltaic wire connecting said recombiner box to said inverter.

12) The wiring arrangement of claim **11** wherein said photovoltaic wire is larger than 6 gauge.

13) The wiring arrangement of claim **10** wherein said recombiner box is devoid of fuses.

14) The wiring arrangement of claim **9** further including photovoltaic wire connecting said wire harness to said recombiner box.

15) The wiring arrangement of claim **14** wherein said photovoltaic wire is 8 or 10 gauge.

16) A method of wiring a solar panel, said method including the acts of:

a) plugging a plurality of wire harness input branches into an equal number of junction boxes, each of said junction boxes in communication with a solar panel; and

b) plugging at least one wire harness output trunk into a recombiner box, where the number of trunks equals the number of wire harnesses.

17) The method of claim **16** further comprising the act of positioning at least one solar panel to allow the collection of solar energy.

18) The method of claim **16** wherein the act of plugging a plurality of wire harness input branches into an equal number of junction boxes includes the act of employing at least one wire harness with at least one in-line fuse.

19) The method of claim **18** further comprising the act of replacing at least one in-line fuse without it being necessary to unplug said wire harness output trunk from said junction box.

* * * * *