US006268559B1

(12) **United States Patent**
Yamawaki

(10) **Patent No.: US 6,268,559 B1**
(45) **Date of Patent: Jul. 31, 2001**

(54) **PHOTOVOLTAIC GENERATION SYSTEM, WIRING APPARATUS FOR PHOTOVOLTAIC GENERATION SYSTEM, AND WIRING STRUCTURE THEREFOR**

(75) Inventor: **Takeharu Yamawaki**, Moriyama (JP)

(73) Assignee: **Kaneka Corporation**, Osaka (JP)

(*) Notice: Subject to any disclaimer, the term of this patent is extended or adjusted under 35 U.S.C. 154(b) by 0 days.

(21) Appl. No.: **09/413,010**

(22) Filed: **Oct. 6, 1999**

(30) **Foreign Application Priority Data**

Mar. 24, 1999 (JP) 11-080283

(51) **Int. Cl.**[7] **H01L 31/042**; H02J 1/00

(52) **U.S. Cl.** **136/244**; 136/243; 136/293; 307/11; 307/12; 307/43; 307/71; 307/77; 307/78

(58) **Field of Search** 136/244, 243, 136/293; 307/12, 11, 43, 71, 77, 78

(56) **References Cited**

U.S. PATENT DOCUMENTS

4,321,416 3/1982 Tennant 136/244

FOREIGN PATENT DOCUMENTS

19502949 A1 * 8/1995 (DE) .
2265264 9/1993 (GB) .
52-135081 11/1977 (JP) .
6-84410 * 3/1994 (JP) .
6-084410 3/1994 (JP) .
7-131045 5/1995 (JP) .
10-135499 * 5/1998 (JP) .

OTHER PUBLICATIONS

Sotolongo, 15th IEEE Photovoltaic Specialists Conference, Kissimmee, FL, pp. 1382–1385, May 12–15, 1981, published Aug. 1981.*
Derwent abstract, Acc. No. 1999–168598, Feb. 1999.*
Patent abstracts of Japan vol. 1998, No. 10, Aug. 31, 1998, abstract for JP 10–135499.
European Search Report EP 99 11 9177, Jun. 26, 2000.

* cited by examiner

Primary Examiner—Alan Diamond
(74) *Attorney, Agent, or Firm*—Hogan & Hartson L.L.P.

(57) **ABSTRACT**

A wiring apparatus comprises a trunk cable, branch junctions, and branch cables diverging individually from the branch junctions. A plurality of photovoltaic modules, which are arranged side by side on a roof of a building or the like, or module units, composed of the modules, serve as generating sections. The respective outputs of the generating sections are lead into the building by means of a trunk conductor of the trunk cable. Each branch cable includes a branch conductor that is connected to the trunk conductor of the trunk cable. Each branch cable of the wiring apparatus is connected to a connector for use as an output terminal of the module units by means of a connector attached to the distal end portion thereof. The module units are connected in parallel with one another by means of the wiring apparatuses, and their respective outputs are supplied to loads in the building by means of a pair of lead-in wires.

14 Claims, 18 Drawing Sheets

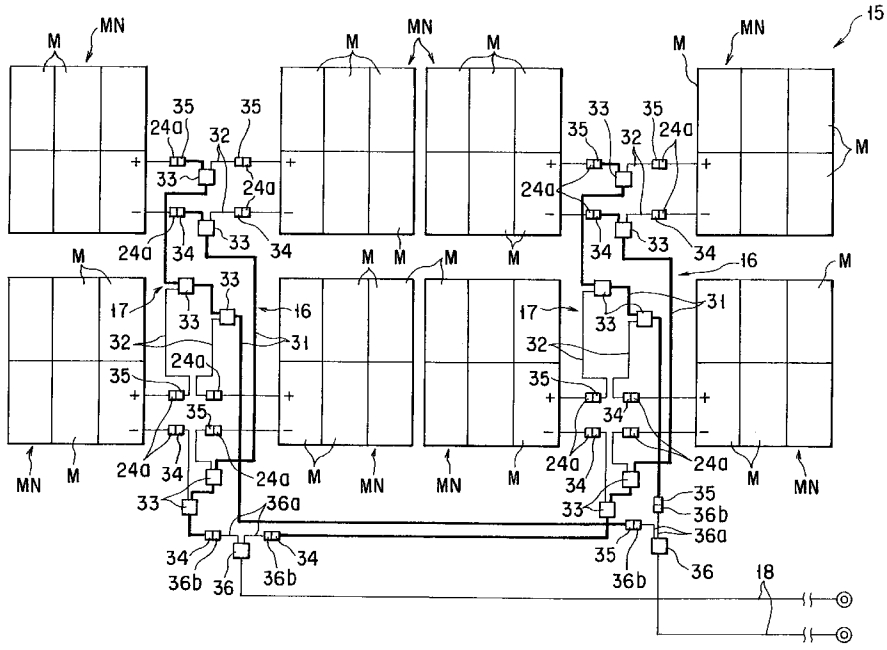

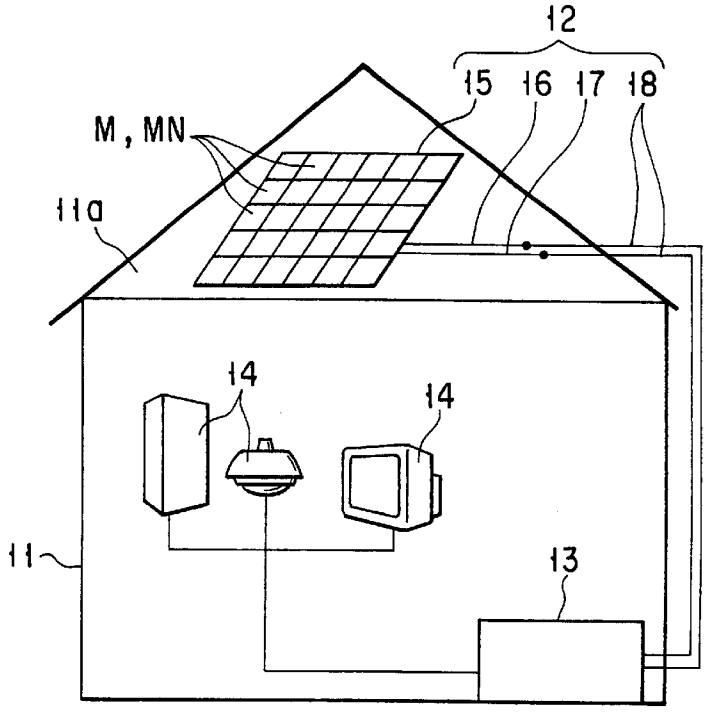
12
15
16
17
18
M, MN
11a
14
14
11
13

FIG. 1

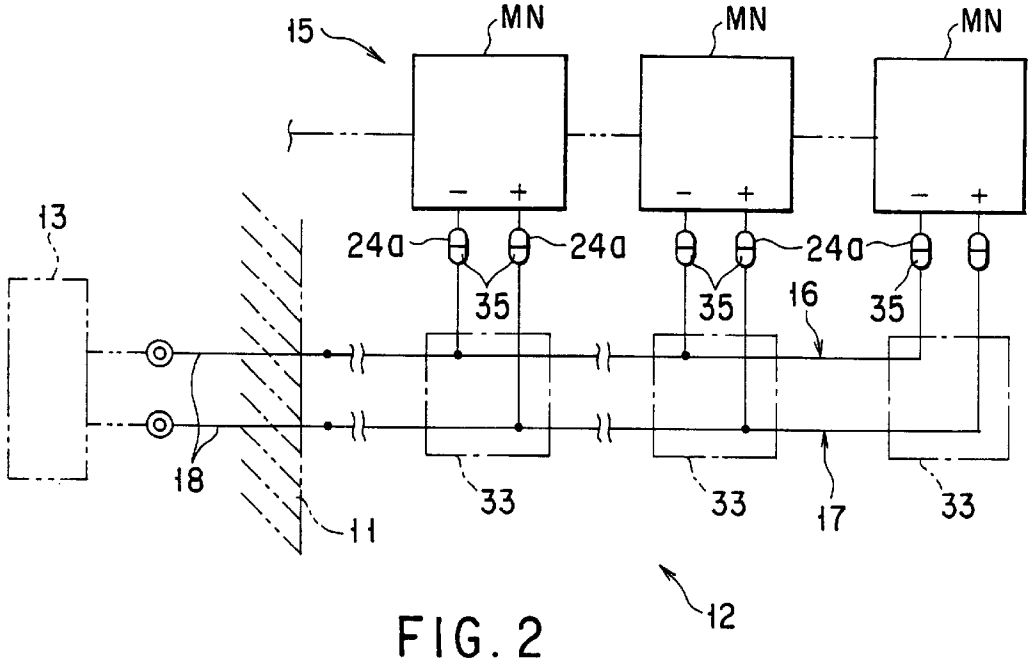
15
MN
MN
MN
13
24a
24a
24a
35
35
35
16
18
11
33
33
17
33
12

FIG. 2

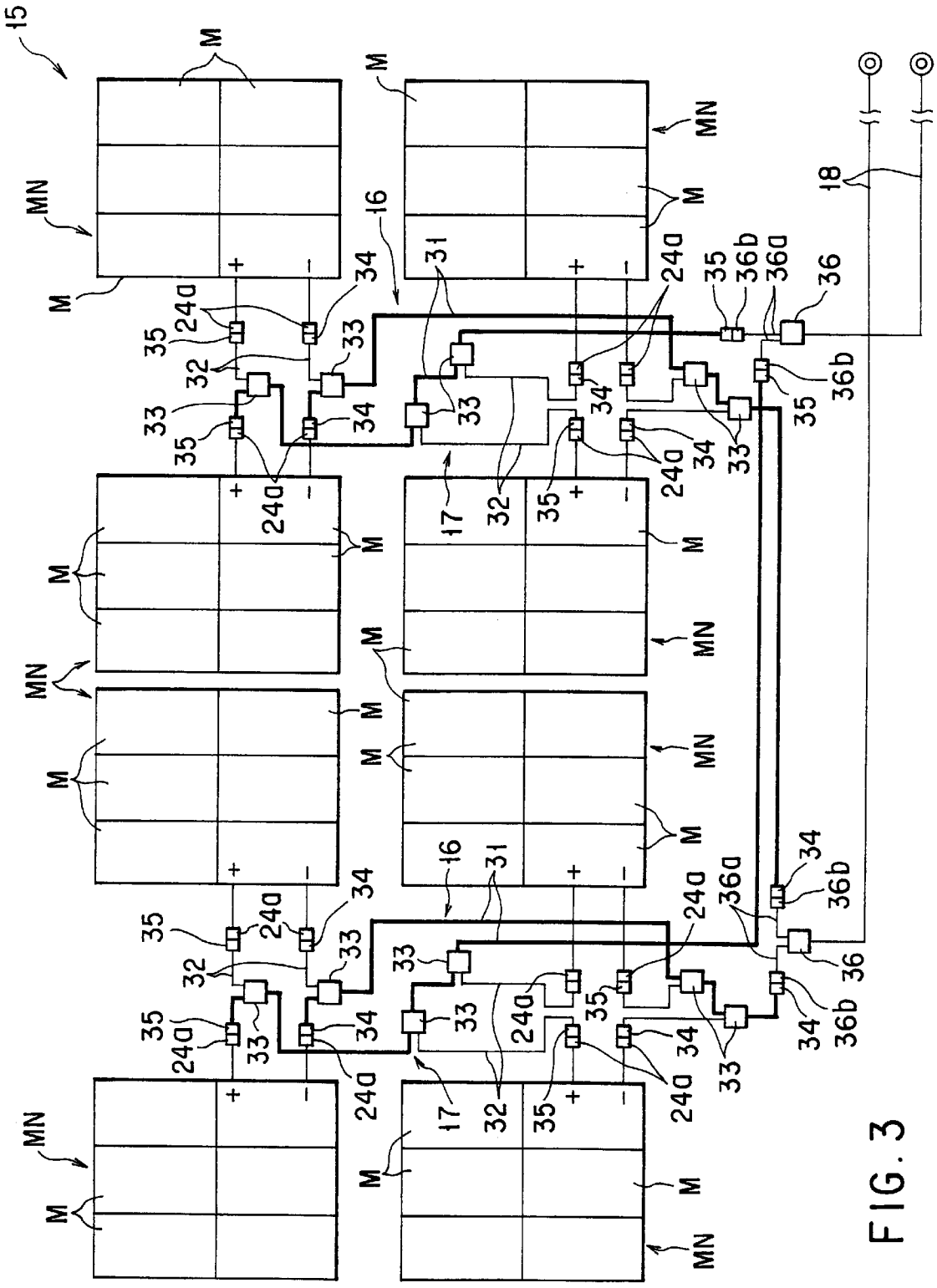

FIG. 3

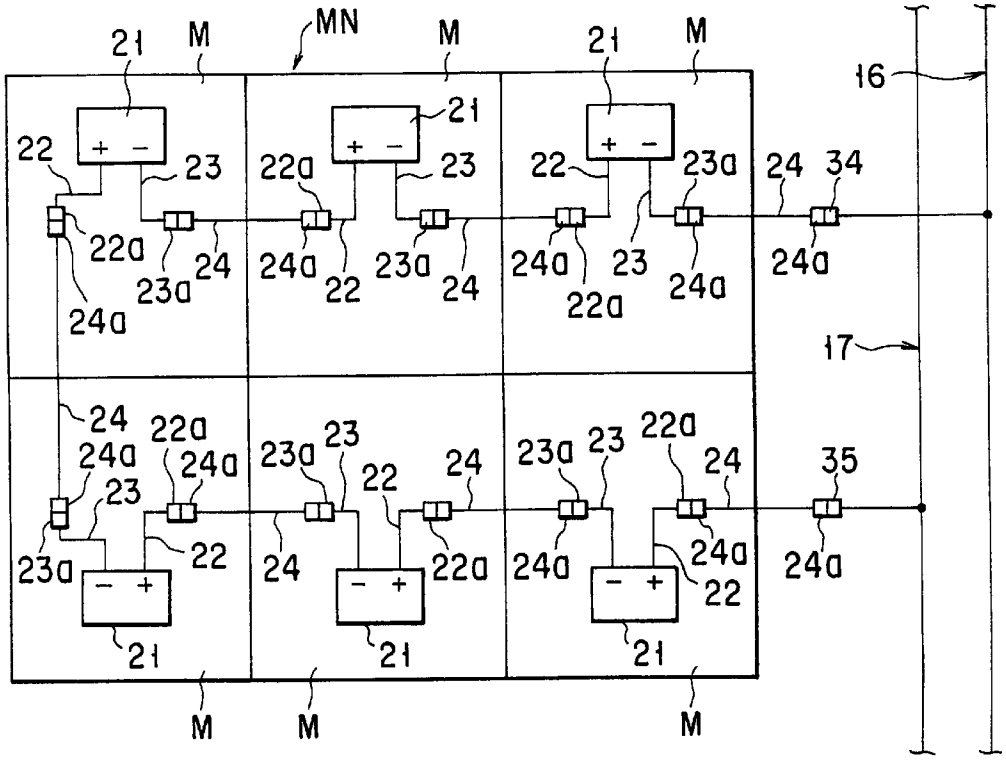
MN
M
21
22
23
22a
23a
24
24a
34
35
16
17

FIG. 4

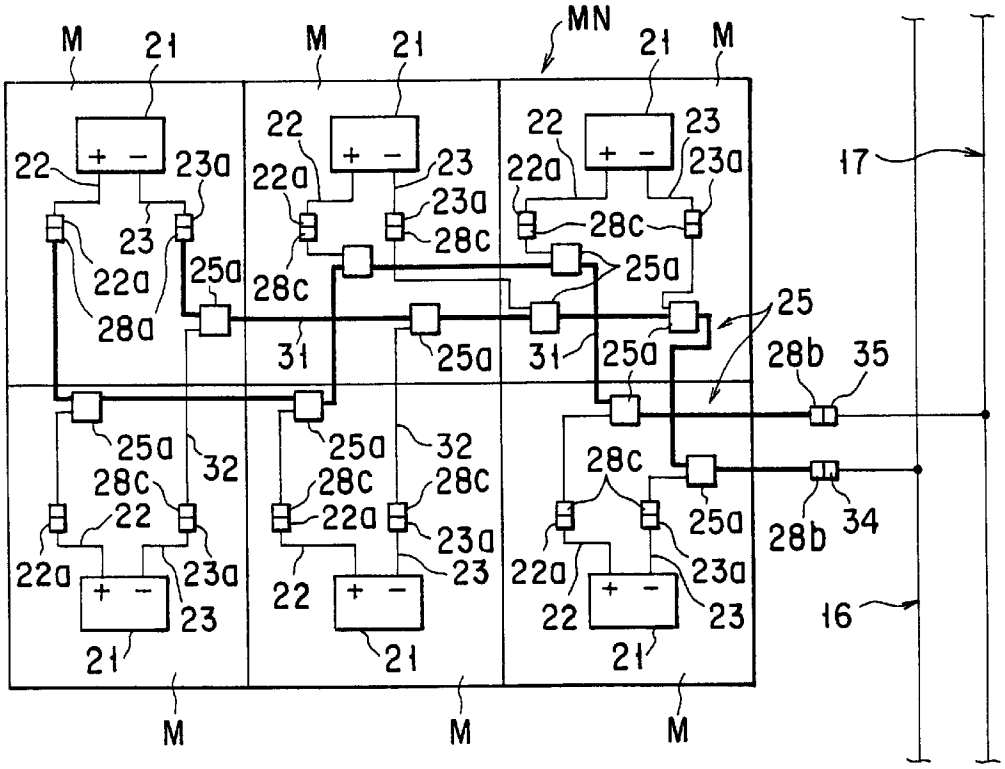
MN
M
21
22
23
22a
23a
24
25
25a
28
28a
28b
28c
31
32
34
35
16
17

FIG. 5

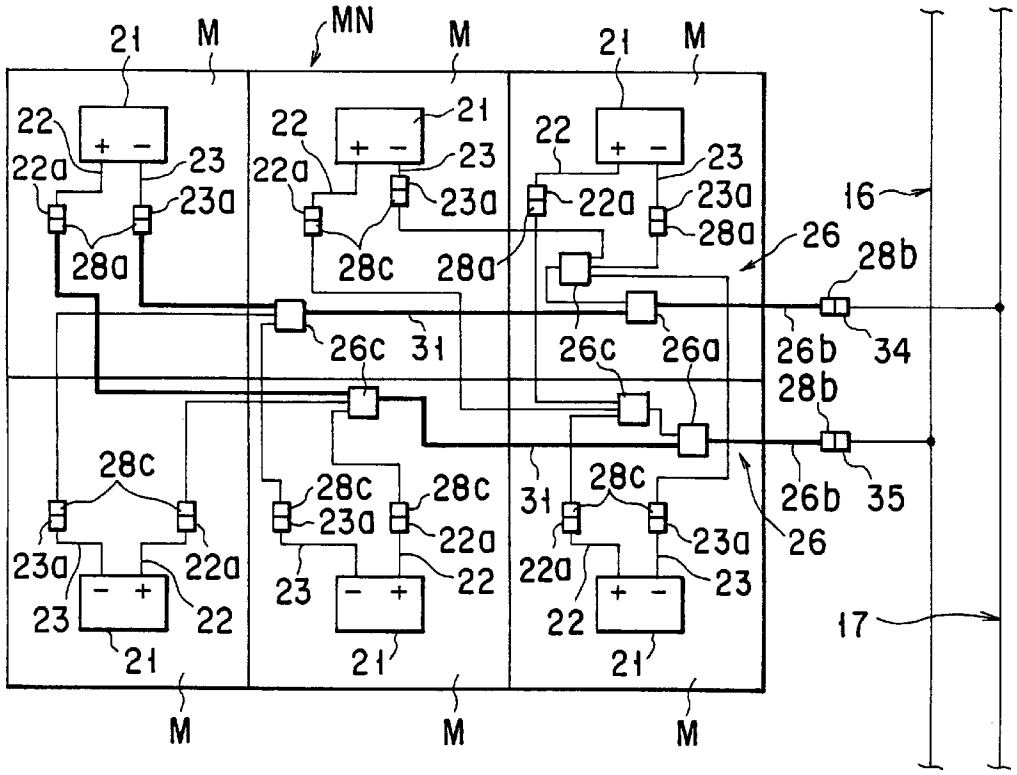
MN
M
21
22
22a
23
23a
28a
28c
26
26a
26b
26c
28b
31
34
35
16
17

FIG. 6

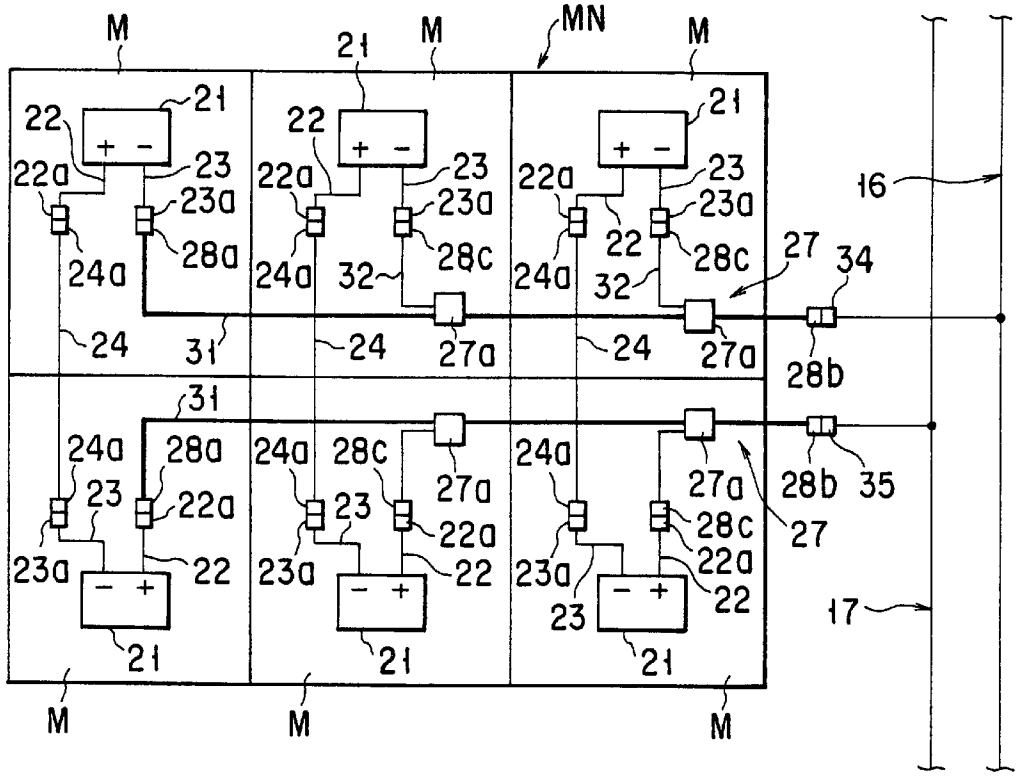
MN
M
21
22
22a
23
23a
24
24a
28a
28b
28c
27
27a
31
32
34
35
16
17

FIG. 7

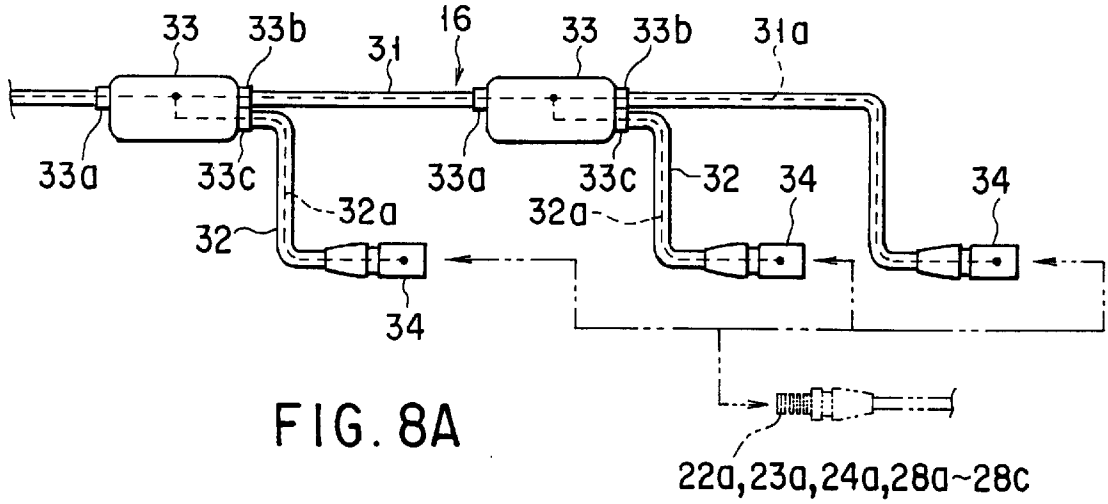

FIG. 8A

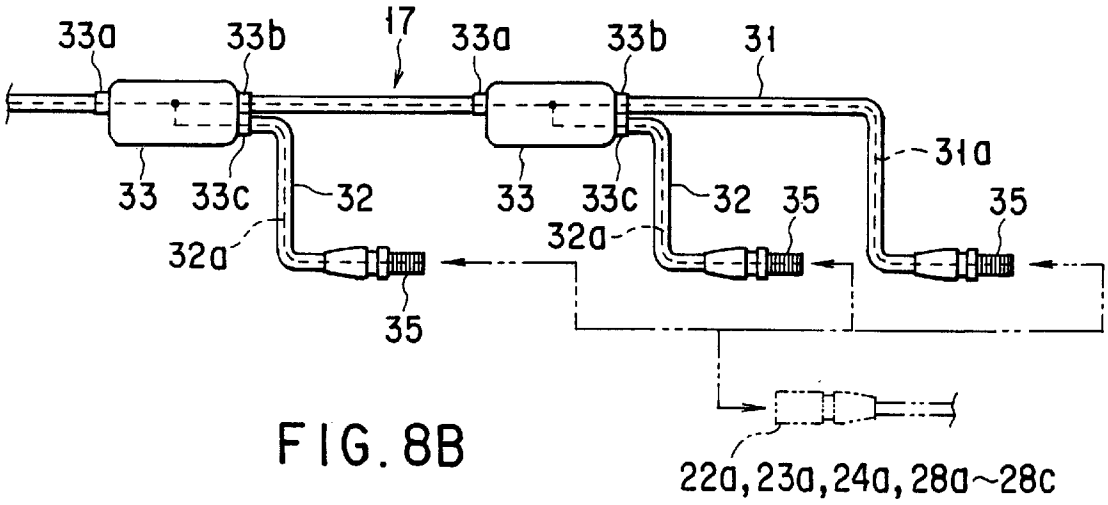

FIG. 8B

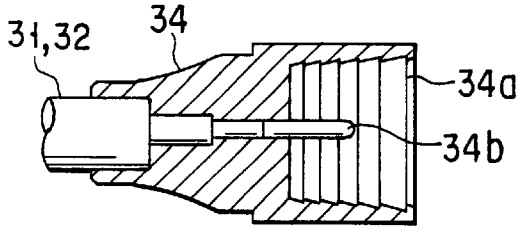

FIG. 8C

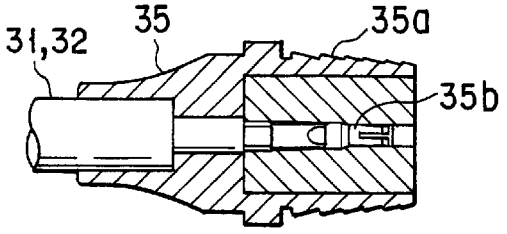

FIG. 8D

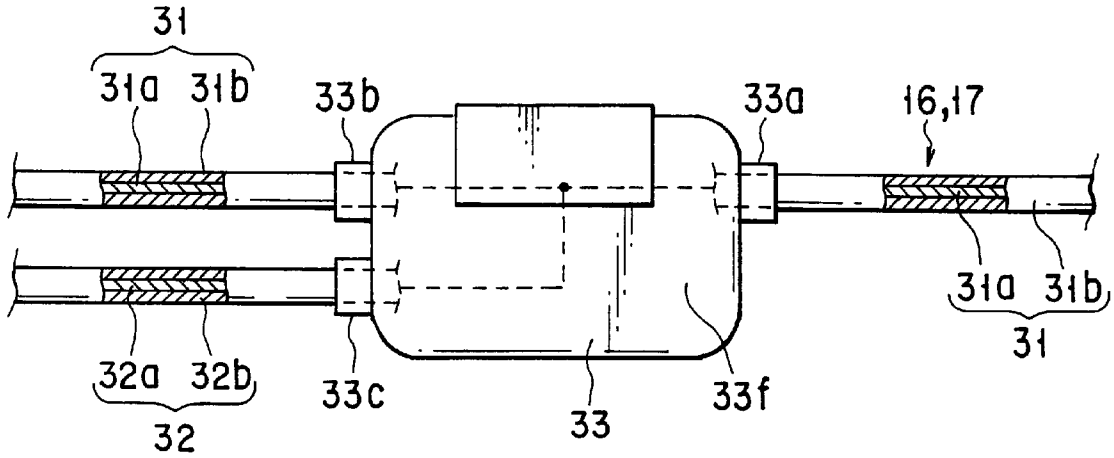
31
31a 31b
33b
33a
16,17
31a 31b
31
32a 32b
32
33c
33
33f

FIG. 9A

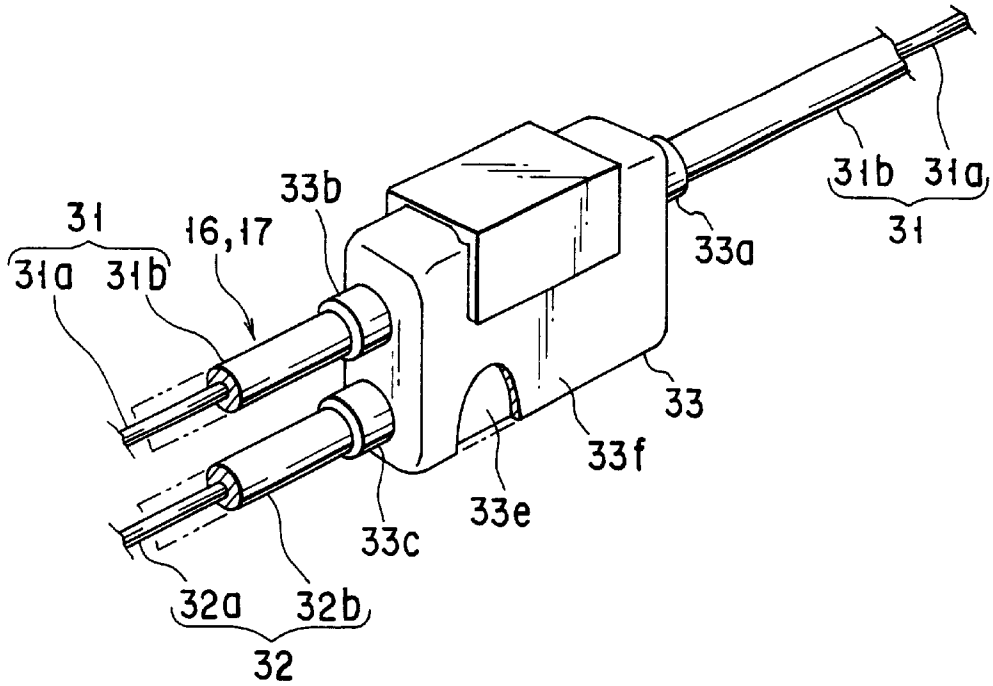
31b 31a
31
33b
31
16,17
31a 31b
33a
33
33f
33e
33c
32a 32b
32

FIG. 9B

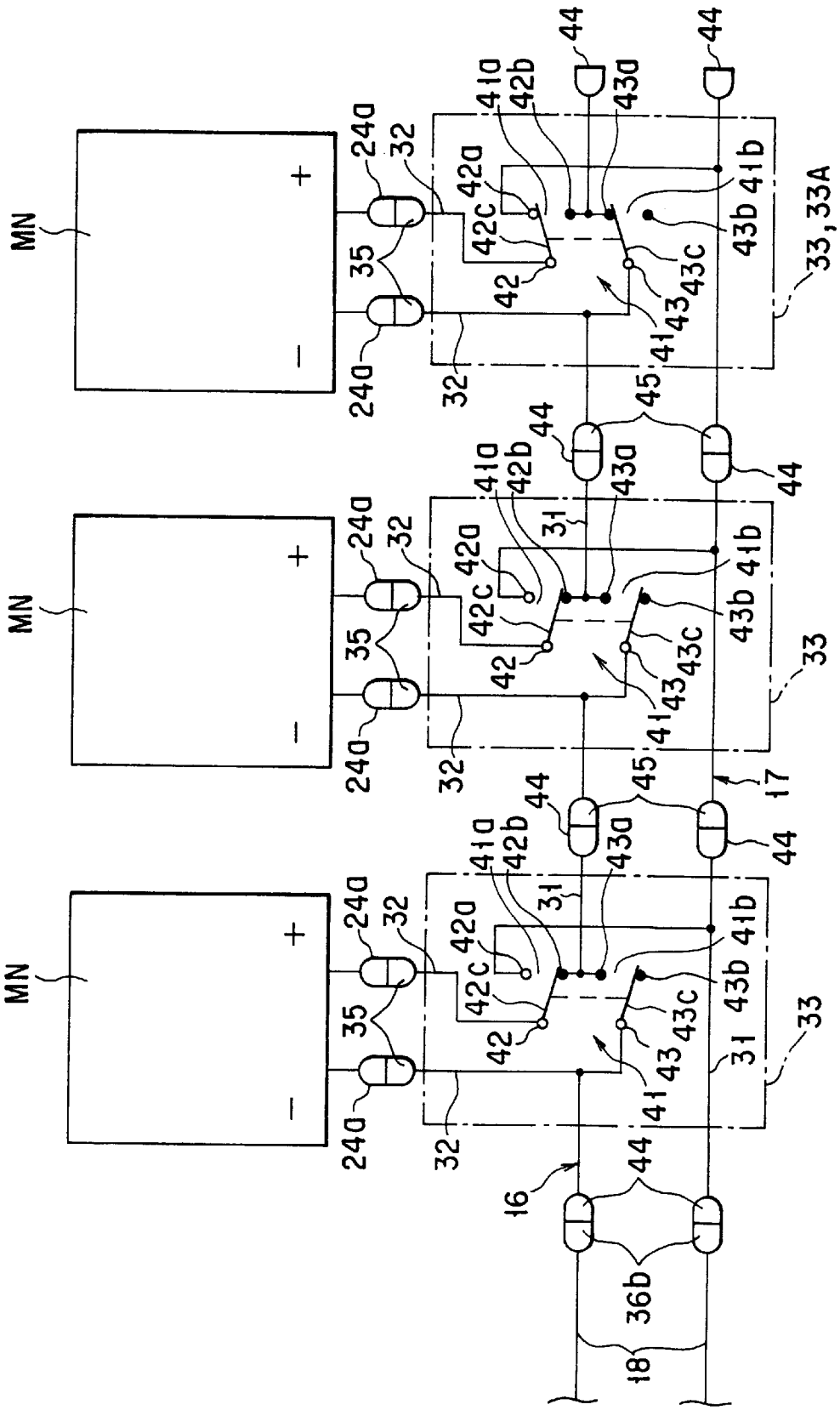
MN
MN
MN
+
−
24a
32
35
41a
42b
42a
42c
42
43a
43b
43c
41b
43
41
44
45
31
33
33,33A
17
16
18
36b

FIG. 10

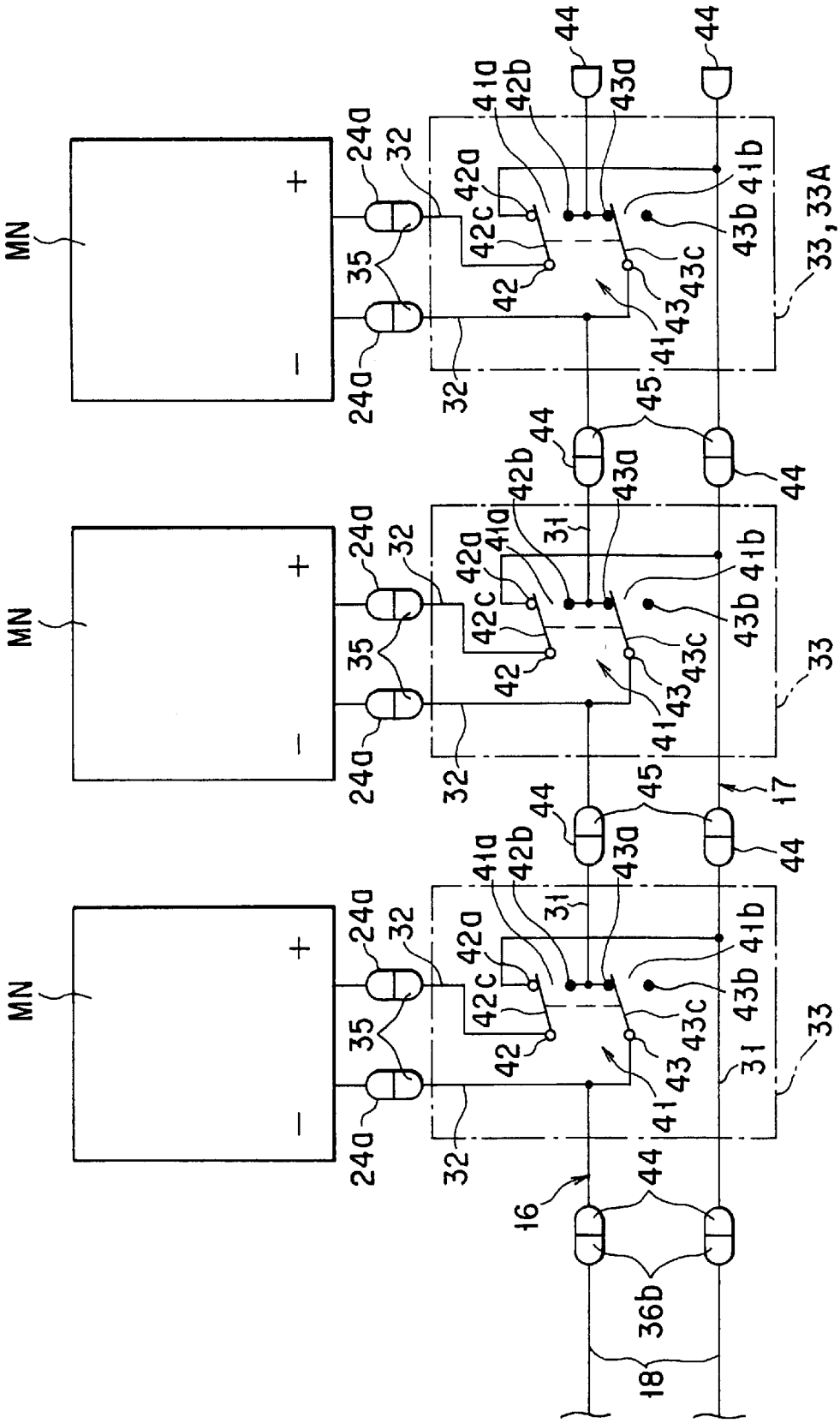
MN
+
−
24a
32
35
42
42a
42b
42c
41
41a
41b
43
43a
43b
43c
44
45
31
33
33, 33A
17
16
18
36b

FIG. 11

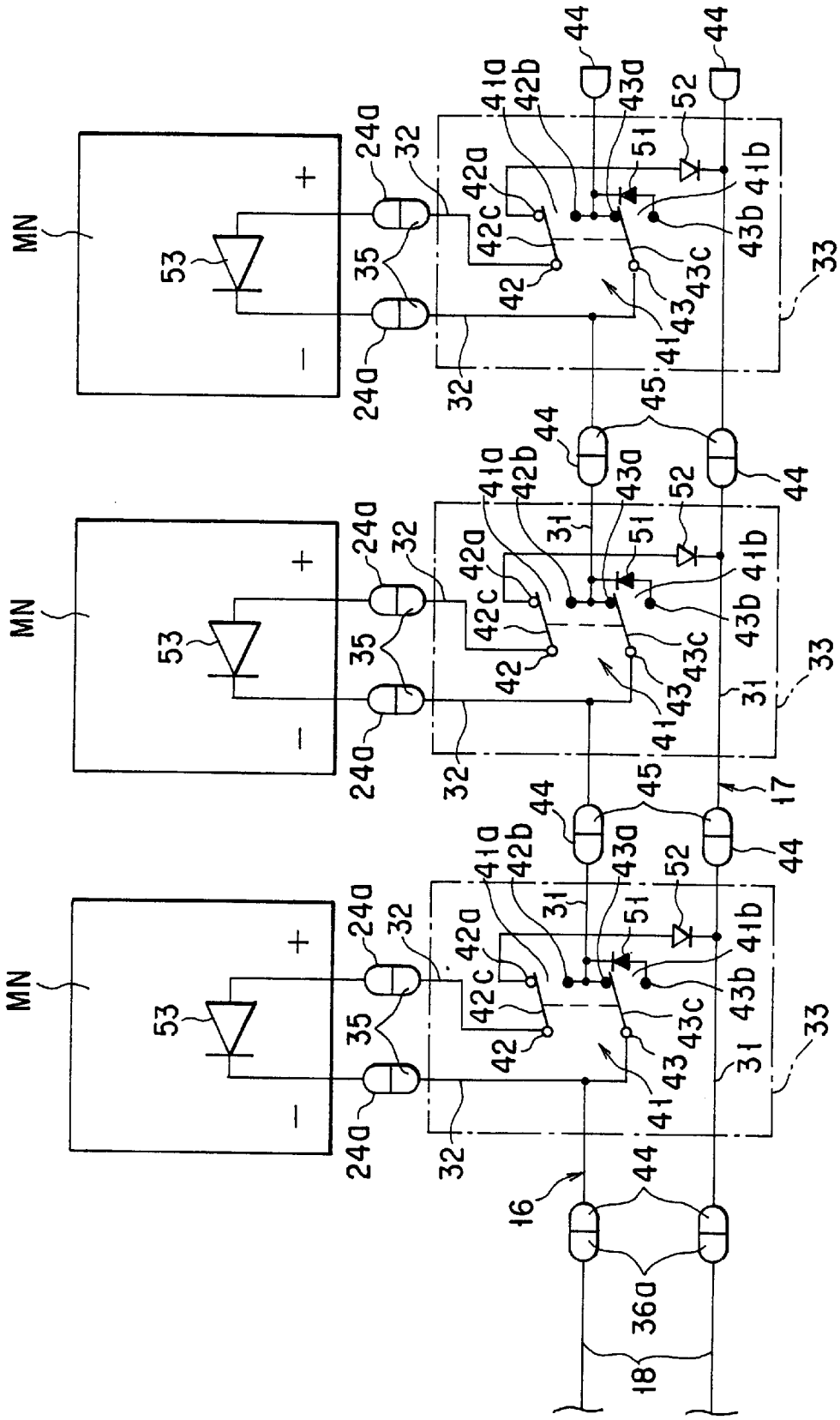
MN
53
+
−
24a
32
35
42
42a
42c
41a
42b
43
43a
43b
43c
41
41b
51
52
31
33
44
45
17
16
18
36a

FIG. 12

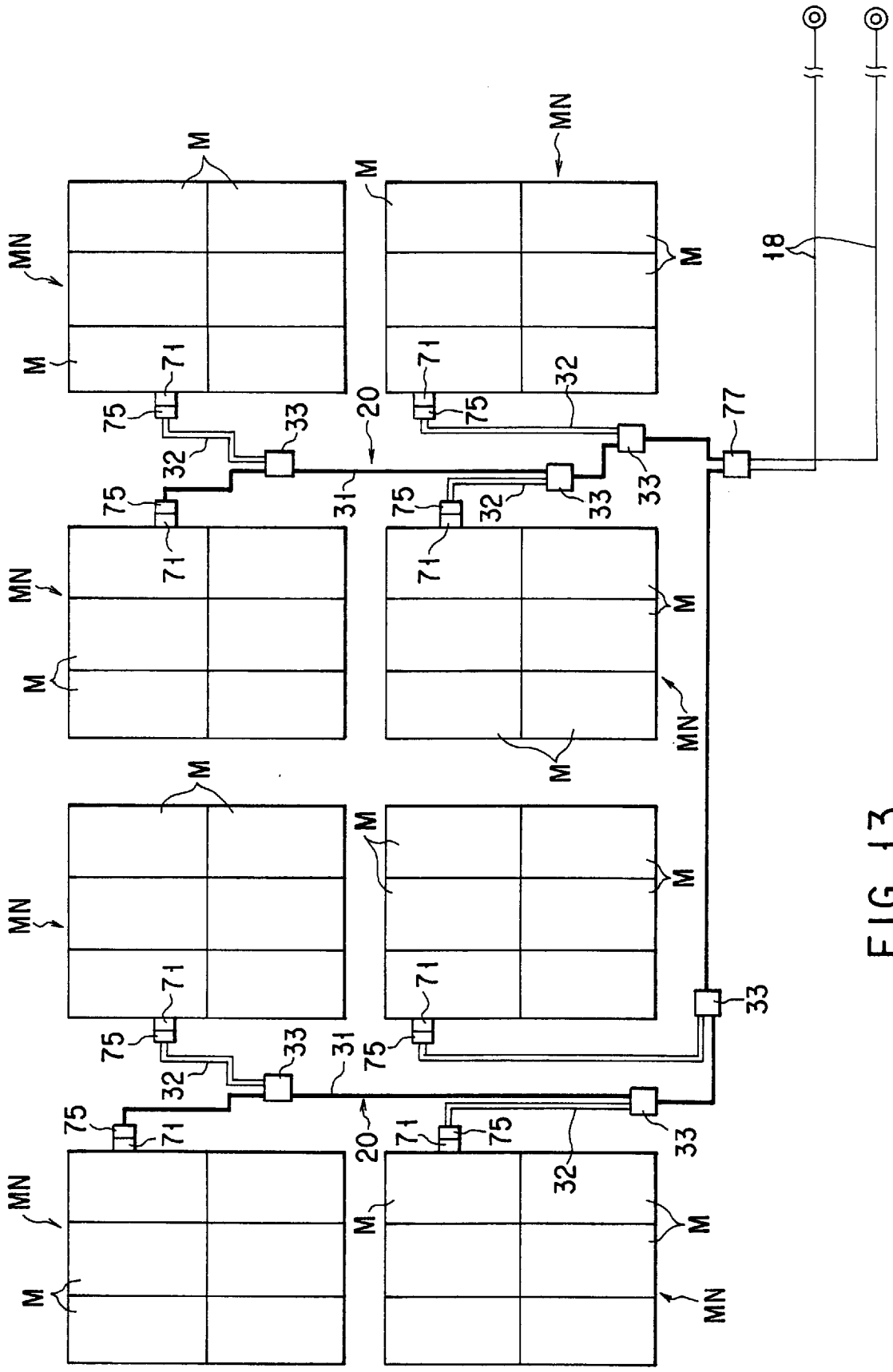

FIG. 13

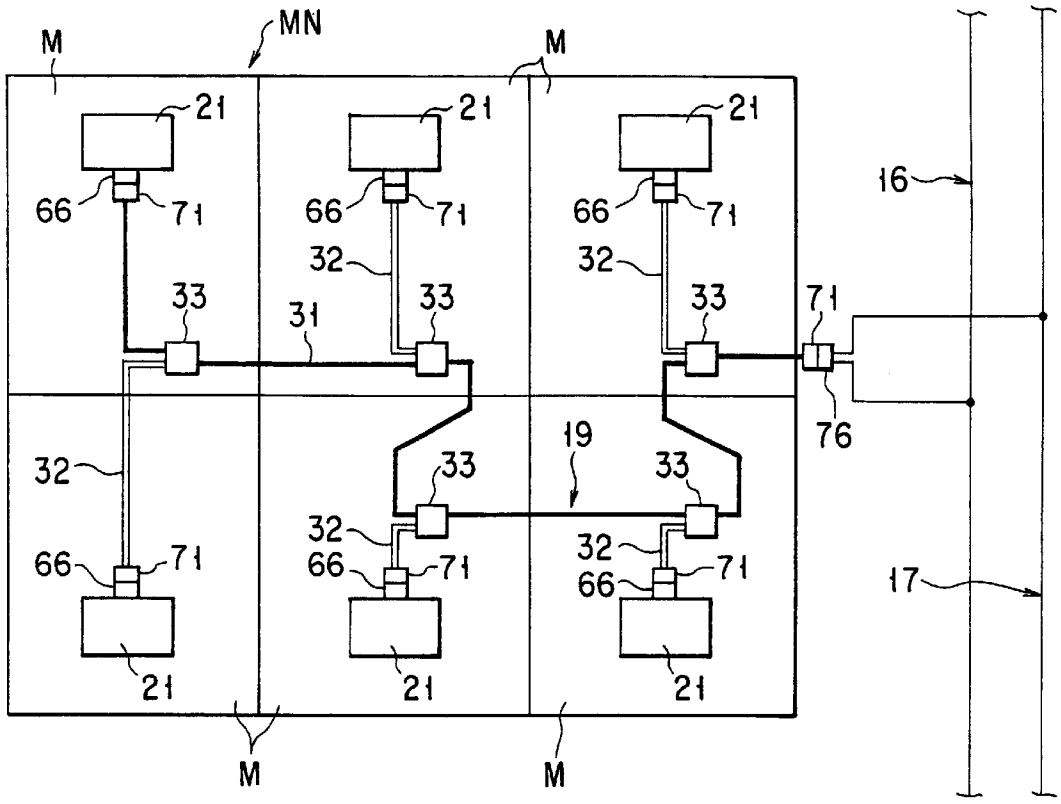
MN
M
M
21
21
21
66
71
66
71
66
71
32
32
33
33
33
31
71
76
16
19
32
33
33
32
32
66
71
66
71
66
71
17
21
21
21
M
M

FIG. 14

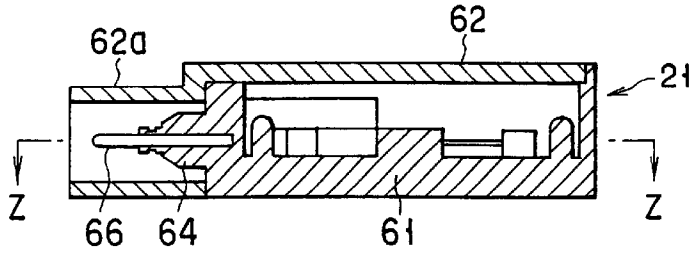

FIG. 15A

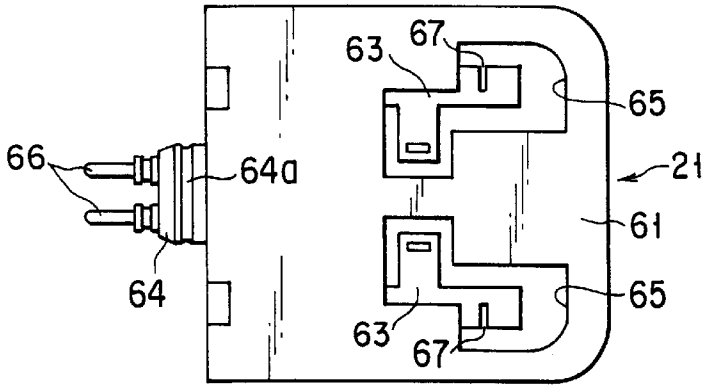

FIG. 15B

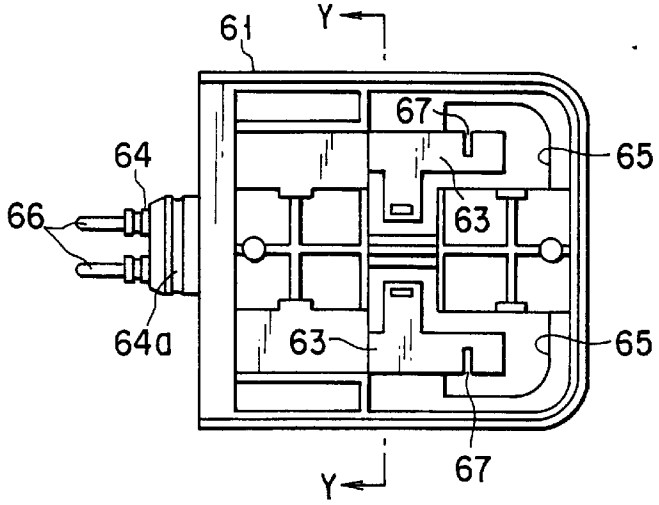

FIG 15C

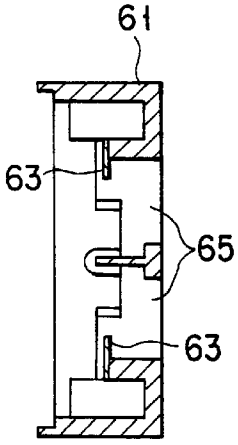

FIG. 15D

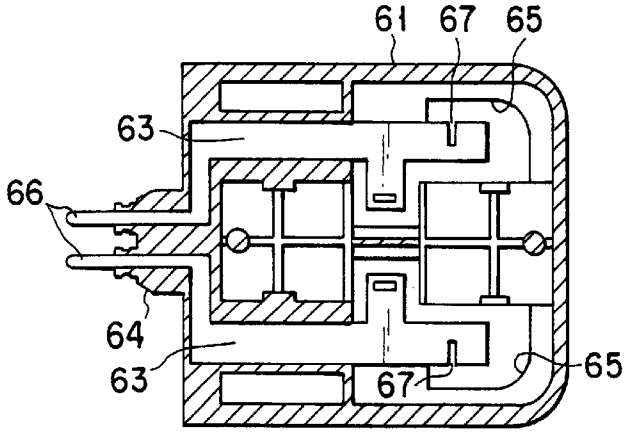

FIG. 15E

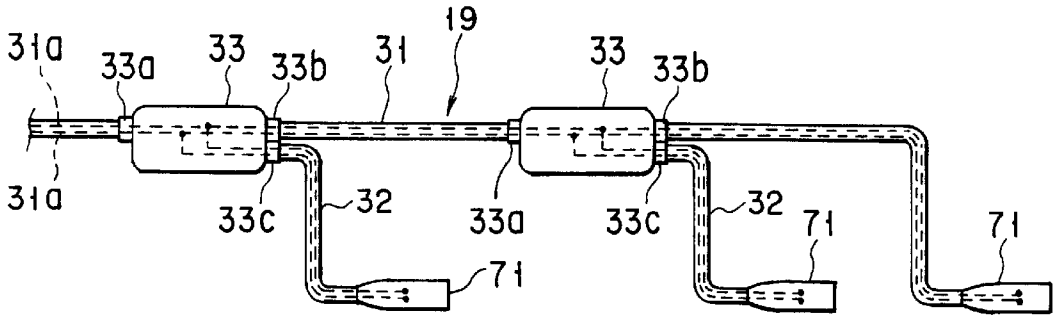

FIG. 16

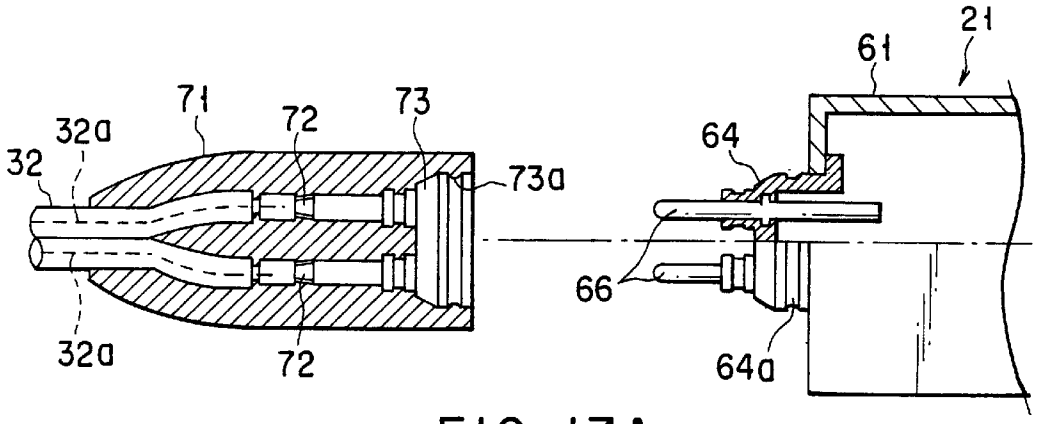

FIG. 17A

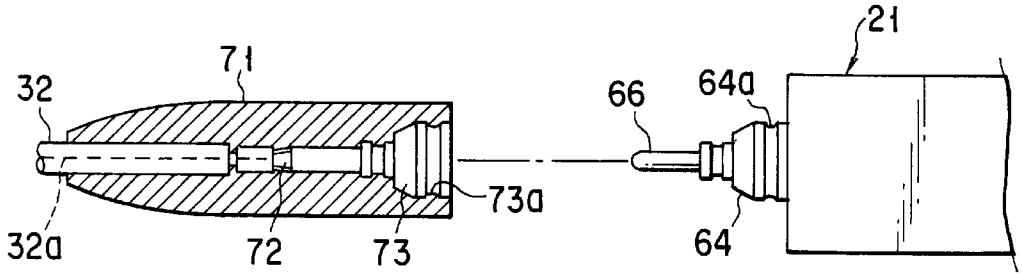

FIG. 17B

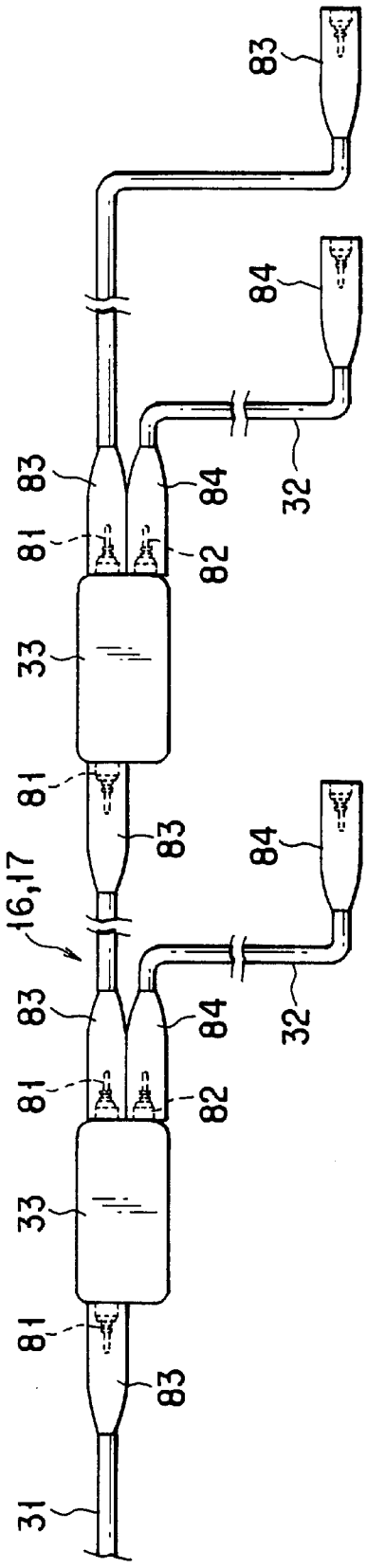

FIG. 18A

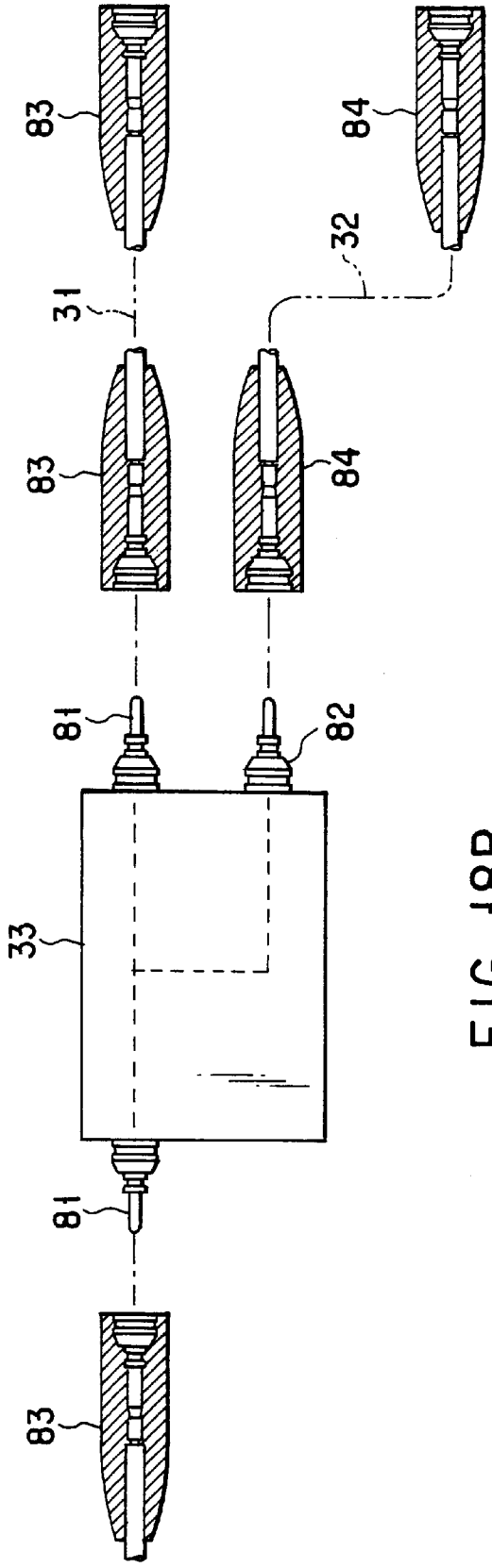

FIG. 18B

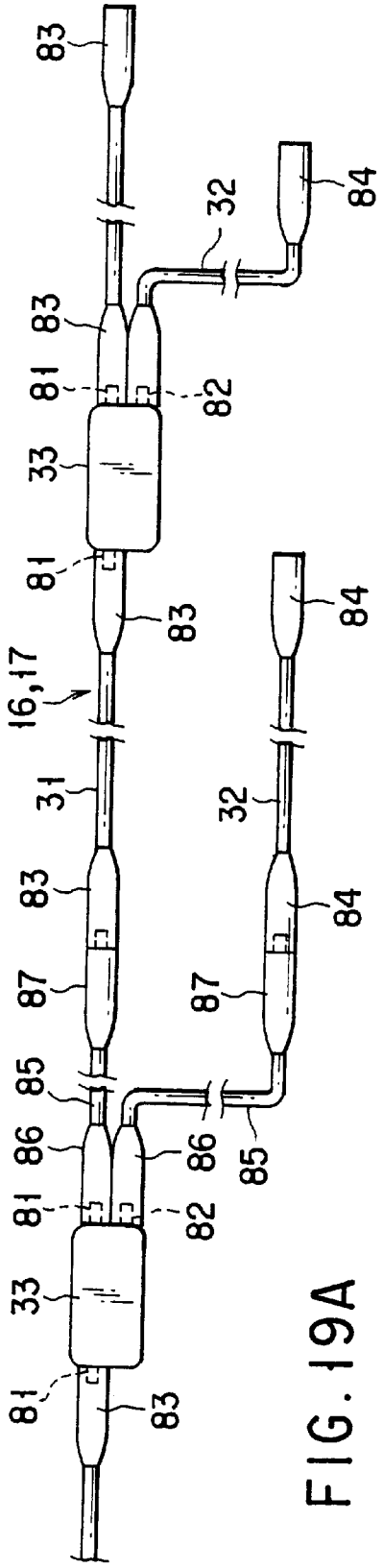

FIG. 19A

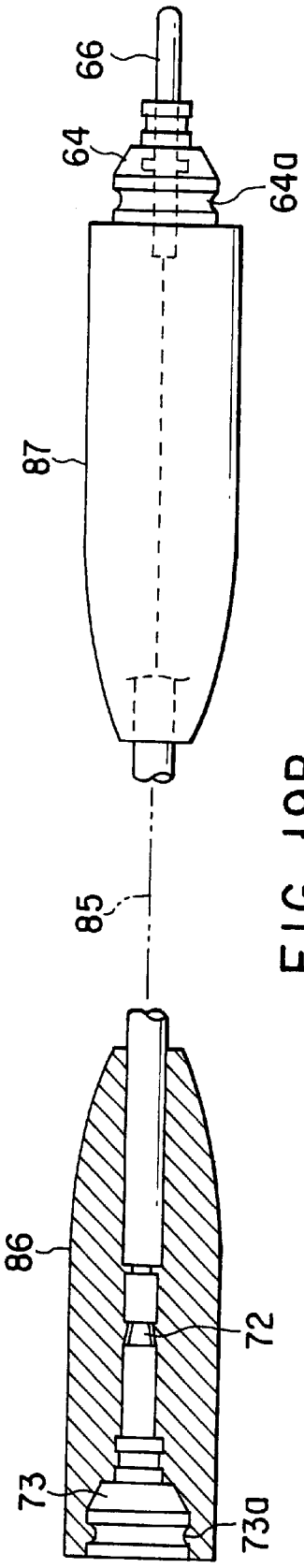

FIG. 19B

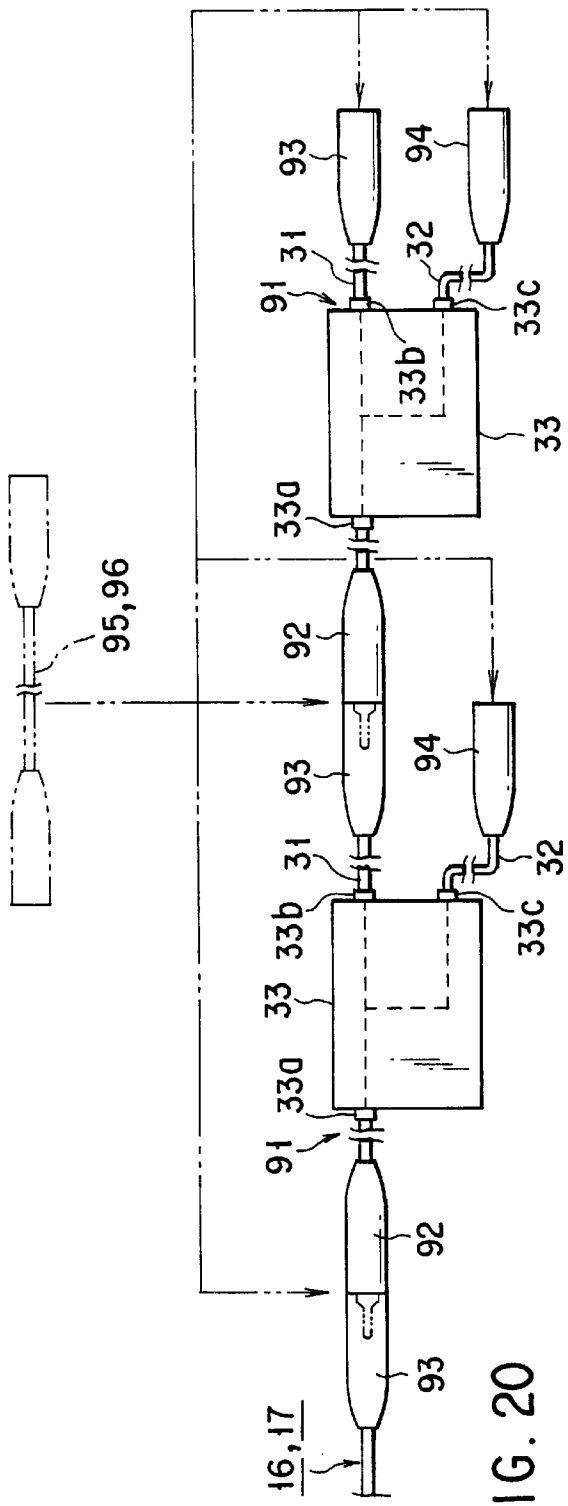
95,96
93
94
31
32
91
33b
33c
33
33a
92
16,17

FIG. 20

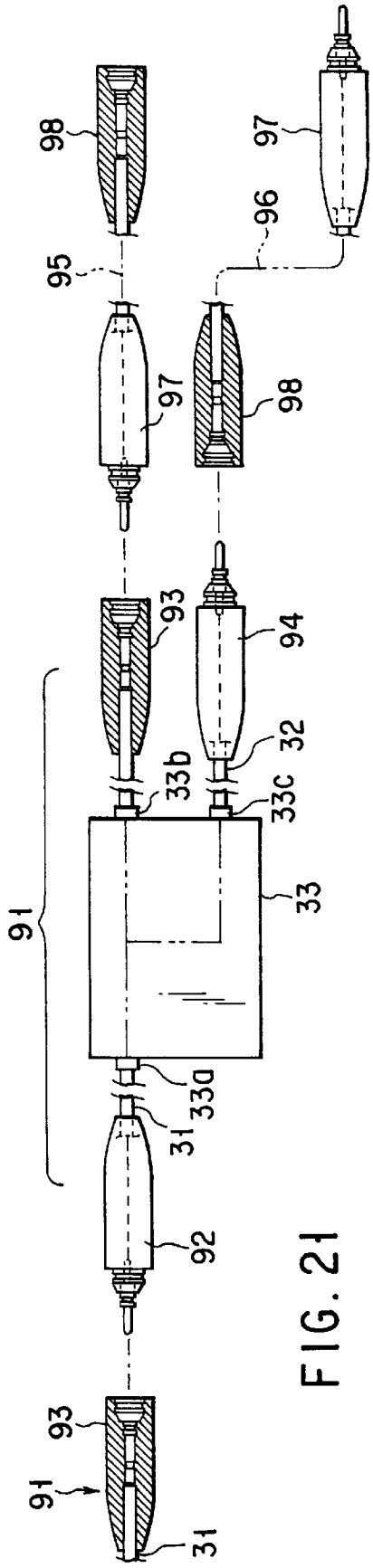
98
97
96
95
93
94
32
33b
33c
33
91
33a
31
92

FIG. 21

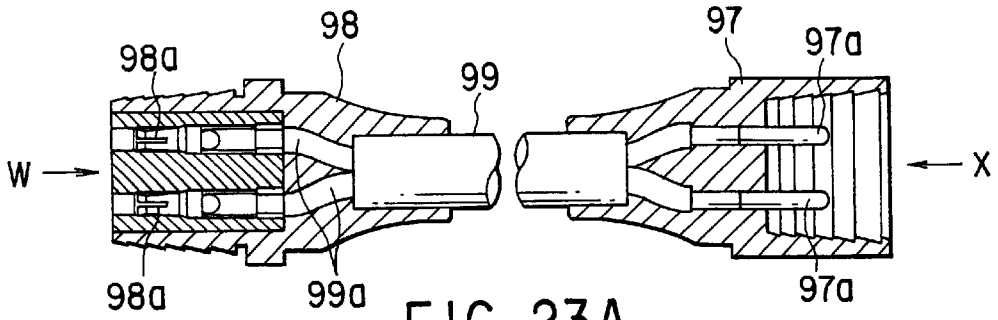

FIG. 23A

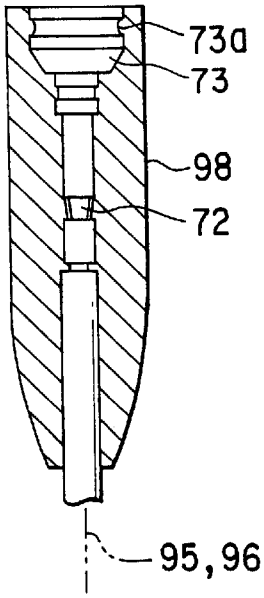

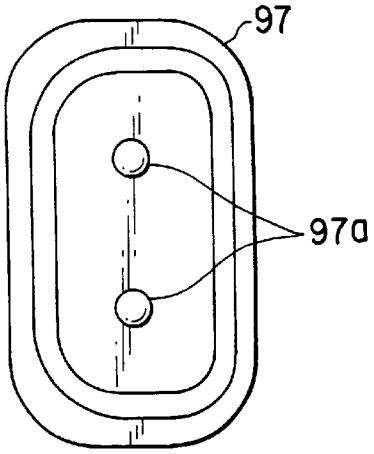

FIG. 23B

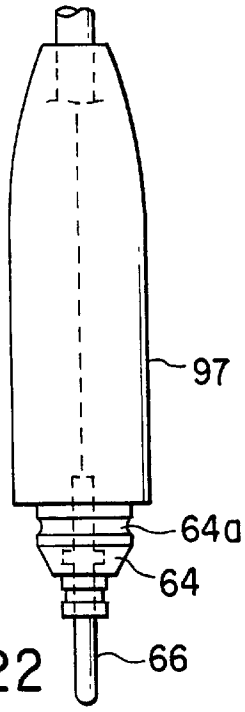

FIG. 22

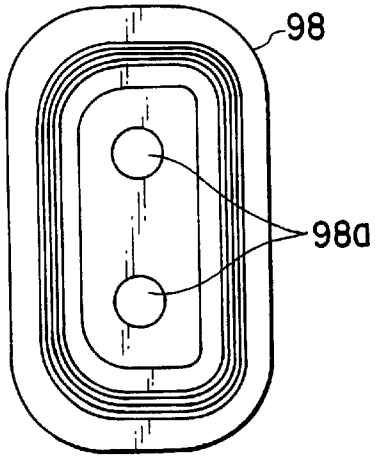

FIG. 23C

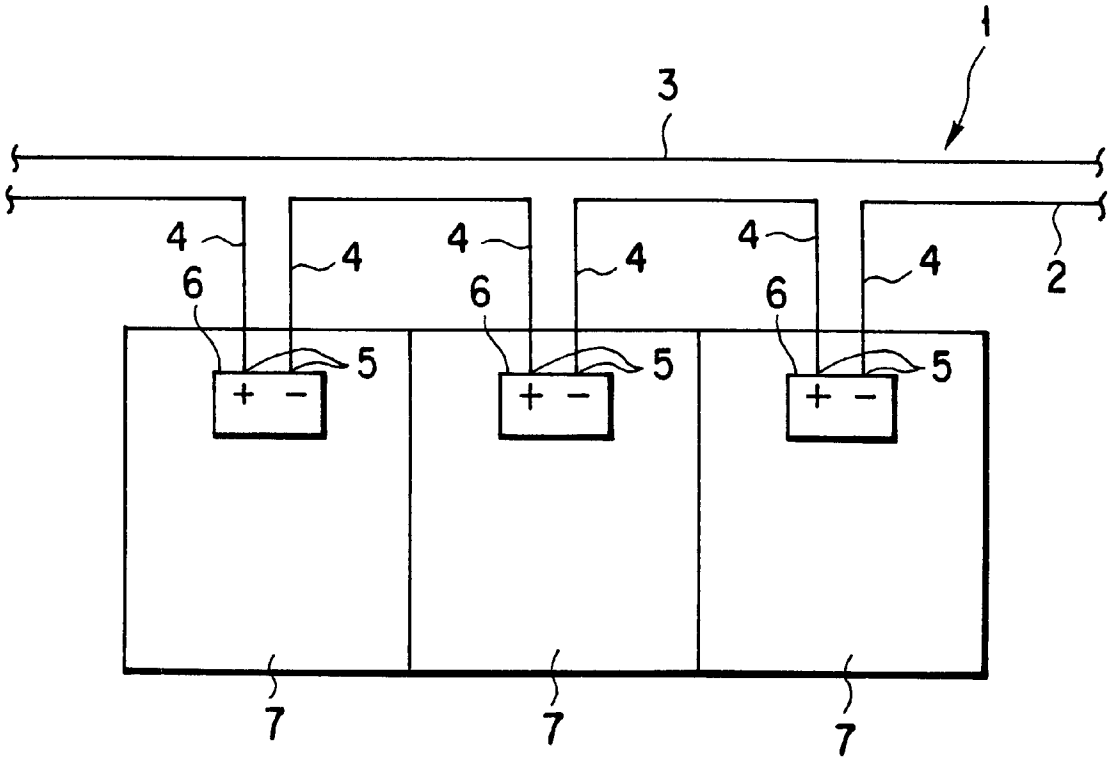

FIG. 24
(PRIOR ART)

PHOTOVOLTAIC GENERATION SYSTEM, WIRING APPARATUS FOR PHOTOVOLTAIC GENERATION SYSTEM, AND WIRING STRUCTURE THEREFOR

BACKGROUND OF THE INVENTION

The present invention relates to a photovoltaic generation system capable of obtaining electric power by means of photovoltaic cells arranged on, for example, a roof of a building, and a wiring apparatus and a wiring structure for conducting electric power produced by the generation system into the building such as a house.

A photovoltaic generation system comprises generating sections each including a plurality of photovoltaic modules, which can generate outputs corresponding to a desired power generation, and wiring apparatuses for conducting the outputs of the generating sections to an inverter unit and the like in a building or house. The generating sections include photovoltaic modules, each formed of a plurality of photovoltaic cells connected in series or parallel with one another, or photovoltaic module units, each formed of a plurality of photovoltaic modules combined together. Normally, one photovoltaic module has one terminal box. The terminal box has two output terminals for positive and negative electrodes. Electric power generated by the photovoltaic module is outputted via the terminal box.

In this power generation system, the module units that are arranged side by side are connected in series and/or parallel with one another. Described in Jpn. Pat. Appln. KOKAI Publication No. 7-131045 is a wiring apparatus that can be suitably used to connect a plurality of photovoltaic modules in series with one another. This prior art, as shown in FIG. **24**, wiring apparatus comprises a trunk **1**, which includes a pair of electric wires **2** and **3**, and branch lines **4** connected in series with one of the wires **2** and **3** of the trunk **1**. These branch lines **4** are connected at given spaces in the longitudinal direction of the one wire **2**. Connecting portions **5** that are connected to the respective output terminals **6** of the module units **7** are provided on the respective distal end portions of the branch lines **4**, individually. This prior art wiring apparatus has a two-core, series-connected structure.

Other conventional wiring apparatuses than the prior art example described above comprise electric wires that are connected individually to the respective output terminals of a plurality of photovoltaic modules or the respective positive and negative output terminals of a plurality of photovoltaic module units. These electric wires are led into a building.

According to the above-described structure in which a large number of wiring apparatuses are connected for each output terminal of each photovoltaic module or module unit and are all led into the building, the wire length of each wiring apparatus that extends from each output terminal of each module or module unit to the interior of the building is substantial. Accordingly, the entire photovoltaic generation system requires use of a lot of electric wires. Besides, a lot of wiring apparatuses are needed. In the case of a photovoltaic generation system that uses 120 photovoltaic modules, for example, the photovoltaic module units are 20 in all if each module unit is formed by connecting six photovoltaic modules in series with one another. In this case, therefore, the wiring structure of the prior art example in which all the electric wires connected individually to the photovoltaic module units are led into the building requires use of 40 single-core wiring apparatuses or 20 two-core wiring apparatuses. The use of the two-core, series-connected wiring apparatuses only ensures the formation of

photovoltaic module units that each include a plurality of photovoltaic modules connected in series with one another. The two-core wiring apparatuses can not connect photovoltaic modules in parallel.

Thus, fetching outputs conventionally requires use of many wiring apparatuses, so that the installation of the photovoltaic generation system on a roof or the like costs much labor. Accordingly, there is a high possibility of misconnection. Since a large hole for a lot of wiring apparatuses must be bored through a wall of the building, so that sealing the building against rainwater and the like entails labor.

The conventional wiring apparatuses extend long from the respective output terminals of the photovoltaic modules or module units into the building. Therefore, the wiring apparatuses that are connected to the photovoltaic module units and the like are liable to hinder maintenance operation for the modules and other elements. Since the existing wiring apparatuses cannot be made longer, moreover, they cannot cope with extension of the photovoltaic modules.

In the case where a plurality of photovoltaic modules or module units are connected in series with one another, connection is made by using dedicated wiring apparatuses for series connection, such as the one described in the aforesaid publication. In the case where a plurality of photovoltaic modules or module units are connected in parallel with one another, connection is made by using dedicated wiring apparatuses for parallel connection. Thus, the wiring apparatuses used are varied in type, and their productivity is poor. Besides, prearrangement for laying operation, as well as the laying operation itself, is complicated. If the connection of the wiring apparatuses requires change to cope with the extension of the photovoltaic modules or maintenance operation, it cannot be achieved with ease.

In wiring apparatuses represented by the aforesaid two-core wiring apparatuses that comprises a trunk and branch lines, branch junctions of the branch lines are expected to be molded from synthetic resin. Possibly, however, outdoor portions of the wiring apparatuses may be exposed to rainwater, so that the branch junctions require high reliability to resist penetration of water.

BRIEF SUMMARY OF THE INVENTION

Accordingly, a first object of the present invention is to provide a wiring apparatus for a photovoltaic generation system, whereby the necessary number of electric wires for fetching outputs from generating sections, including a plurality of photovoltaic modules or module units, can be reduced, and which can be easily laid with a lower possibility of wrong wiring.

A second object of the invention is to provide a wiring apparatus, in which auxiliary cables are used to improve the laying efficiency for wiring operation and the maintainability of photovoltaic modules and to cope with extension or modification of the photovoltaic modules.

A third object of the invention is to provide a wiring apparatus, in which junction cables can be connected to branch junctions to improve the maintainability of photovoltaic modules and cope with extension or modification of the photovoltaic modules.

A fourth object of the invention is to provide a wiring apparatus for a photovoltaic generation system, capable of being improved in reliability of water proofing of branch junctions.

A fifth object of the invention is to provide a wiring apparatus, whereby prearrangement for the installation and

laying efficiency of a photovoltaic generation system and the productivity thereof can be improved.

A sixth object of the invention is to provide a wiring apparatus capable of conducing to the improvement of the output of a photovoltaic generation system.

A seventh object of the invention is to provide a wiring apparatus capable of being easily connected to the output terminal of a photovoltaic module or module unit.

An eighth object of the invention is to provide a photovoltaic generation system capable of achieving at least the first one of the objects described above.

A ninth object of the invention is to provide a wiring structure for a photovoltaic generation system, capable of achieving at least the first one of the objects described above.

In order to achieve the first object, according to the present invention, there is provided a wiring apparatus, whereby the respective output terminals of a plurality of generating sections, each including photovoltaic modules, are connected to one another. The apparatus comprises a trunk cable including a trunk conductor for conducting the respective outputs of the generating sections, a plurality of branch cables diverging individually from a plurality of longitudinally intermediate portions of the trunk cable, each of the branch cables including a branch conductor having one end connected electrically to a longitudinally intermediate portion of the trunk conductor and the other end connected electrically to the output terminal of each corresponding generating section, and branch junctions formed between the trunk cable and the branch cables.

With use of this wiring apparatus of the invention, the photovoltaic modules or module units are connected in parallel with one another by means of the common trunk cable. Accordingly, the number of wiring apparatuses that extend from the terminals of the photovoltaic modules or module units into a building can be reduced. Besides, the common trunk cable is used for the parallel-connected modules or module units. Therefore, each branch cable is expected to have only a short length ranging from the trunk cable to the output terminal of each photovoltaic module or module unit. Thus, necessary wiring apparatuses for the entire photovoltaic generation system and electric wires attached thereto can be reduced in number. Since the number of electric wires that extend from the respective output terminals of the photovoltaic modules or module units into the building is reduced, moreover, laying can be carried out with ease, and the possibility of wrong wiring can be lowered.

In order to achieve the second object, a wiring apparatus according to the invention further comprises connectors for connecting auxiliary cables, the connectors being attached individually to the respective ends of the trunk cable and the branch cables. According to the invention, the respective ends of the trunk and branch cables are connected to the output terminals of the photovoltaic modules or module units by means of the connectors thereon. Accordingly, the wiring apparatus can be easily connected to each output terminal. Since the connectors can be disengaged from the output terminals, the photovoltaic modules and the wiring apparatus can be separated from one another as maintenance operation for the modules is carried out. If necessary, moreover, the connectors may be connected individually with connectors on auxiliary trunk or branch cables. Depending on the use of the auxiliary cables or the number of auxiliary cables used, therefore, the respective lengths of the trunk and branch cables can be changed. Thus, the lengths of the trunk and branch cables can be adjusted according to the layout or configuration of the photovoltaic modules or module units, and the photovoltaic modules can be increased for extension or rearranged with ease. According to the invention, moreover, wiring operation for the photovoltaic generation system is easy. Since the photovoltaic modules and the wiring apparatus can be separated from one another during the maintenance of the modules, furthermore, the maintainability of the modules is improved.

In order to achieve the third object, a wiring apparatus according to the invention comprises cable connecting portions at each branch junction. The trunk cable and the branch cables are removably connected to the cable connecting portions by means of connectors. A junction cable having first and second connectors may be provided between each cable connecting portion and the trunk or branch cable to be connected thereto. In the maintenance of the photovoltaic modules, the modules and wiring apparatus can be separated from one another by disengaging the trunk and branch cables from the cable connecting portion. Thus, the maintainability of the photovoltaic modules and the like can be improved. If necessary, moreover, the junction cable can be connected between each cable connecting portion and the cable separated therefrom. Depending on the use of the junction cable, therefore, the respective lengths of the trunk and branch cables can be changed. Thus, the lengths of the trunk and branch cables can be adjusted according to the layout or configuration of the photovoltaic modules or module units, and the photovoltaic modules can be increased for extension or rearranged with ease.

In order to achieve the fourth object, a wiring apparatus according to the invention is designed so that a cover member on each branch junction is thermowelded to protective sheath on the trunk or branch cable. The cover member and the protective sheath are formed of the same synthetic resin material. According to the invention, the fusibility of the cable connecting portion of the branch junction having the cover member and the protective sheath on the cables is improved. According to the invention, moreover, the cable connecting portions and the protective sheaths are firmly integrally formed with one another, whereby the reliability of water proofing is improved.

In order to achieve the fifth object, a wiring apparatus according to the invention comprises switches at the branch junctions for use as circuit changing means for switching the connection between the photovoltaic modules or module units to a series- or parallel-connection mode. In connecting the photovoltaic modules or module units in series with one another, the switches are shifted to the series-connection mode so that the trunk and branch cables are fit for series connection. In connecting the photovoltaic modules or module units in parallel with one another, the switches are shifted to the parallel-connection mode so that the trunk and branch cables are fit for parallel connection. Thus, the wiring apparatus can connect the photovoltaic modules or module units as required in series or parallel with one another. According to the invention, wiring apparatuses need not be produced separately for series and parallel connections, so that the productivity of the wiring apparatuses can be improved. Besides, a desired circuit can be formed quickly by shifting the switches to the series- or parallel-connection mode at the scene of installation of the photovoltaic generation system.

In order to achieve the sixth object, each branch junction of the wiring apparatus according to the invention includes an electric circuit for connecting the photovoltaic modules or module units with one another, the electric circuit having

a check diode for preventing current from flowing from higher-output generating sections, out of the parallel-connected generating sections, to lower-output generating sections. In the photovoltaic generation system, the respective outputs of some photovoltaic modules or module units sometimes may become lower than those of others or be reduced to zero. If the modules or module units are connected in parallel with one another in this case, the output currents of high-output photovoltaic modules or module units sometimes may flow back into low-output (or zero-output) photovoltaic modules or module units through the wiring apparatus. Since each branch junction is provided with the check diode, according to the invention, the output currents of the other modules or module units are prevented from flowing back into some reduced-output modules or module units, so that the general output of the photovoltaic generation system is improved.

In order to achieve the seventh object, a wiring apparatus according to the invention is designed so that the trunk cable and the branch cables are provided individually with connectors that are removably connected to the respective output terminals of the photovoltaic modules or module units. Since the trunk cable or branch cables are connected to the output terminals of the modules or module units by means of the connectors, according to the invention, laborious connecting operation such as soldering need not be carried out at the scene of installation of the photovoltaic generation system.

In order to achieve the eighth object, a photovoltaic generation system according to the invention comprises a plurality of generating sections, each including photovoltaic modules located outside a building or module units formed by combining the modules each, and aforesaid wiring apparatuses connected individually to the respective output ends of the generating sections.

In order to achieve the ninth object, a wiring structure for a photovoltaic generation system according to the invention is designed so that the respective output terminals of a plurality of generating sections, each including photovoltaic modules located outside the building, are connected individually by means of the wiring apparatuses, and the trunk cable or lead-in wires connected thereto are led into the building, in order to conduct the respective outputs of the generating sections to loads in the building by means of wiring apparatuses. According to the invention, wiring operation for the photovoltaic generation system is easy, and the photovoltaic modules, etc. can be easily laid on a roof or the like. Further, the possibility of misconnection is lowered, and only a small hole for the wiring apparatuses is expected to be bored through a wall of the building.

Additional objects and advantages of the invention will be set forth in the description which follows, and in part will be obvious from the description, or may be learned by practice of the invention. The objects and advantages of the invention may be realized and obtained by means of the instrumentalities and combinations particularly pointed out hereinafter.

BRIEF DESCRIPTION OF THE SEVERAL VIEWS OF THE DRAWING

The accompanying drawings, which are incorporated in and constitute a part of the specification, illustrate presently preferred embodiments of the invention, and together with the general description given above and the detailed description of the preferred embodiments given below, serve to explain the principles of the invention.

FIG. **1** is a conceptual diagram showing the relations between a photovoltaic generation system according to a first embodiment of the present invention and its loads;

FIG. **2** is a circuit diagram showing a case where module units of the system according to the first embodiment of the invention are connected in parallel with one another;

FIG. **3** is a circuit diagram showing connections between wiring apparatuses of the system according to the first embodiment and lead-in wires;

FIG. **4** is a circuit diagram showing a wiring structure in the system according to the first embodiment, having photovoltaic modules connected in series with one another;

FIG. **5** is a circuit diagram showing a wiring structure in the system according to the first embodiment, having the photovoltaic modules connected in parallel with one another;

FIG. **6** is a circuit diagram showing a wiring structure in the system according to the first embodiment, having the photovoltaic modules connected by means of alternative wiring apparatuses;

FIG. **7** is a circuit diagram showing a wiring structure in the system according to the first embodiment, having the photovoltaic modules connected in series and parallel with one another;

FIG. **8**A is a partial side view of a wiring apparatus for negative electrode used in the generation system according to the first embodiment;

FIG. **8**B is a partial side view of a wiring apparatus for positive electrode used in the generation system according to the first embodiment;

FIG. **8**C is a sectional view of a connector of the wiring apparatus for negative electrode shown in FIG. **8**A;

FIG. **8**D is a sectional view of a connector of the wiring apparatus for positive electrode shown in FIG. **8**B;

FIG. **9**A is a side view, partially in section, showing a branch junction of the wiring apparatus shown in FIG. **8**A;

FIG. **9**B is a perspective view, partially in section, showing the branch junction of the wiring apparatus shown in FIG. **8**A;

FIG. **10** is a circuit diagram showing a state in which module units of a photovoltaic generation system according to a second embodiment of the invention are connected in series with one another;

FIG. **11** is a circuit diagram showing a state in which the module units of the system shown in FIG. **10** are connected in parallel with one another;

FIG. **12** is a circuit diagram showing the way of connection between module units of a photovoltaic generation system according to a third embodiment of the invention;

FIG. **13** is a circuit diagram showing a wiring structure for module units of a photovoltaic generation system according to a fourth embodiment of the invention;

FIG. **14** is a circuit diagram showing a wiring structure in the system according to the fourth embodiment, having photovoltaic modules connected in parallel with one another;

FIG. **15**A is a sectional view of a terminal box used in each photovoltaic module of the system according to the fourth embodiment;

FIG. **15**B is a plan view of the terminal box shown in FIG. **15**B;

FIG. **15**C is a plan view of the terminal box of FIG. **15**A with its lid off;

FIG. **15**D is a sectional view of a body of the terminal box taken along line Y—Y of FIG. **15**C;

FIG. **15**E is a sectional view of the body of the terminal box taken along line Z—Z of FIG. **15**A;

FIG. **16** is a partial side view of a wiring apparatus used in the system according to the fourth embodiment;

FIG. **17**A is a partial plan view, partially in section, showing a connector of the wiring apparatus of FIG. **16** and the terminal box;

FIG. **17**B is a partial side view, partially in section, showing the connector and the terminal box of FIG. **17**A;

FIG. **18**A is a partial side view of a wiring apparatus used in a photovoltaic generation system according to a fifth embodiment of the invention;

FIG. **18**B is a side view, partially in section, showing the wiring apparatus of FIG. **18**A;

FIG. **19**A is a side view showing the wiring apparatus and junction cables used in the system according to the fifth embodiment;

FIG. **19**B is a side view, partially in section, showing one of the junction cables of FIG. **19**A;

FIG. **20** is a partial side view of a wiring apparatus used in a photovoltaic generation system according to a sixth embodiment of the invention;

FIG. **21** is a side view, partially in section, showing a wiring unit constituting part of the wiring apparatus shown in FIG. **20** and auxiliary cables;

FIG. **22** is a side view, partially in section, showing one of the auxiliary cables of FIG. **21**;

FIG. **23**A is a sectional view showing a two-core auxiliary cable used in the system according to the sixth embodiment;

FIG. **23**B is a front view of a first connector taken in the direction of arrow X in FIG. **23**A;

FIG. **23**C is a front view of a second connector taken in the direction of arrow W in FIG. **23**A; and

FIG. **24** is a circuit diagram showing a prior art wiring structure.

DETAILED DESCRIPTION OF THE INVENTION

Several embodiments of the present invention will now be described with reference to the accompanying drawings.

FIGS. **1** to **9**B show a first embodiment of the invention. FIG. **1** is a conceptual diagram showing the relations between a photovoltaic generation system **12** attached to a building (e.g., house **11**) and its loads **14**. The generation system **12** is installed outside the house **11**. An inverter unit **13** and the loads **14**, including electric appliances, etc., are arranged in the house **11**. These loads **14** are supplied with electric power from the system **12** via the inverter unit **13**.

The photovoltaic generation system **12** comprises a photovoltaic panel (so-called solar-cell panel) **15** on a roof **11***a*, wiring apparatuses **16** and **17** for fetching the output of the panel **15**, and a pair of lead-in wires **18** for conducting electric power fetched by means of the apparatuses **16** and **17** into the house. The photovoltaic panel **15** may be a roofing material that constitutes part of the roof **11***a*. Alternatively, the panel **15** may be formed independently of the roof **11***a* and put on it. The photovoltaic panel **15** is composed of a plurality of photovoltaic modules M or photovoltaic module units MN. Each module M includes a plurality of photovoltaic cells (so-called solar cells) that are arranged in a matrix. Each module unit MN includes a plurality of modules M that are arranged in a matrix. The photovoltaic modules M and the module units MN function as generating sections. The cells that form each module M may be arranged in any number or mode or of any type (crystalline or amorphous). Amorphous cells are used in the first embodiment. One end of each of the single-core wiring apparatuses **16** and **17** (which will be described in detail later) is connected to the output terminals of the modules M or module units MN. The other end of each wiring apparatus is connected to one end of its corresponding lead-in wire **18**. The other end of each lead-in wire **18** is connected to the inverter unit **13** in the house.

As shown in FIG. **2**, the module units MN that constitute the photovoltaic panel **15** are connected electrically in parallel with one another by means of the two wiring apparatuses **16** and **17**. As shown in FIG. **3**, the panel **15** is composed of, for example, eight module units MN. Each module unit MN includes six modules M. The six modules M that constitute each module unit MN are connected in series and/or parallel with one another, depending on the required output. Six modules M shown in FIG. **4** are connected in series with one another by means of connecting wires **24**. Six modules M shown in FIG. **5** or **6** are connected in parallel with one another by means of wiring apparatuses **25** or **26**. Six modules M shown in FIG. **7** are connected in series and parallel with one another by means of wiring apparatuses **27**.

Each of the module units MN shown in FIGS. **4** to **7** has terminal boxes **21** that are mounted individually on the respective back surfaces of the modules M. Each terminal box **21** is provided with two output terminals **22** and **23**. The one output terminal **22** is composed of a single-core lead wire led out of the terminal box **21** and a connector **22***a* connected to the lead wire. Likewise, the other output terminal **23** is composed of a single-core lead wire led out of the terminal box **21** and a connector **23***a* connected to the lead wire. The output terminals **22** and **23** serve for positive and negative electrodes, respectively. A connector **24***a* is provided on each end of each of the single-core connecting lines **24** shown in FIGS. **4** and **7**. The first, second, and third single-core wiring apparatuses **25**, **26** and **27** shown in FIGS. **5**, **6** and **7**, respectively, function as output fetching lines for parallel connection.

Any of the wiring apparatuses **25**, **26** and **27** are constructed in the same manner as the wiring apparatuses **16** and **17** that are connected individually to the lead-in wires **18**. Each first wiring apparatus **25** includes a trunk cable **31** (indicated by a thick line in FIG. **5**) and branch junctions **25***a*, e.g., five in number, which are attached individually to longitudinally intermediate portions of the cable **31**. As shown in FIG. **7**, each third wiring apparatus **27** includes a trunk cable **31** (indicated by a thick line in FIG. **7**) and two branch junctions **27***a* attached individually to longitudinally intermediate portions of the cable **31**. One branch cable **32** (indicated by a fine line in FIGS. **5** and **7**) diverges from each of the branch junctions **25***a* and **27***a*. Connectors **28***a* and **28***b* are connected individually to the opposite ends of each trunk cable **31**. A connector **28***c* is connected to the distal end of each branch cable **32**. As shown in FIG. **6**, two trunk cables **31** (indicated by thick lines in FIG. **6**) are used in this generation system. One end of each trunk cable **31** is connected to one trunk output line **26***b* by means of a branch junction **26***a*. Each output line **26***b* is a part of the corresponding trunk cable **31**. A plurality of branch cables (e.g., two in number, indicated by fine lines in FIG. **6**) diverge from the junction **26***c*. A connector **28***b* is attached to the distal end of each trunk output line **26***b*. A connector **28***a* is attached to the distal end of each trunk cable **31**. A connector

28*c* is connected to the distal end of each branch cable that diverges from the junction 26*c*.

In the case of the module unit MN shown in FIG. 4, the output terminals 22 and 23 of each of the six modules M are connected by means of the connecting wire 24. The respective output terminals 22 and 23 of the two modules M that are situated on the opposite ends of the electric circuit are connected to the wiring apparatuses 16 and 17, respectively, by means of connecting wires 24 and connectors 24*a* that are different in polarity. The connectors 24*a*, which project outward from the module unit MN, are used as output ends of the module unit MN. In this series connection (FIG. 4), the connectors 22*a* and 23*a* of each module M and the connectors 24*a* on the connecting wires 24 are removably connected to one another by mating.

In the module unit MN shown in FIG. 5, the six modules M are connected in parallel with one another by means of a pair of first wiring apparatuses 25 for positive and negative electrodes. A connector 28*b* is attached to one end of each wiring apparatus 25 that protrudes from the module unit MN. The connector 28*b* functions as an output terminal of the module unit MN. In this parallel connection, the connectors 22*a* and 23*a* of each module M and the connectors 28*a* and 28*c* of the wiring apparatuses 25 are removably connected to one another by mating.

In the module unit MN shown in FIG. 6, the six modules M are connected in parallel with one another by means of a pair of second wiring apparatuses 26. A connector 28*b* is attached to the distal end of each of a pair of output lines 26*b* that protrude from the module unit MN. The connector 28*b* functions as an output terminal of the module unit MN. In this parallel connection, the connectors 22*a* and 23*a* of each module M and the connectors 28*a* and 28*c* of the wiring apparatuses 26 are removably connected to one another by mating.

In the module unit MN shown in FIG. 7, the six modules M are connected in parallel and series with one another by means of a pair of wiring apparatuses 27 for parallel connection and three connecting wires 24 for series connection. A connector 28*b* is attached to the distal end of each wiring apparatus 27 that protrudes from the module unit MN. The connector 28*b* functions as an output terminal of the module unit MN. In this series-parallel connection (FIG. 7), the connectors 22*a* and 23*a* of each module M, connectors 24*a* of the connecting wires 24, and connectors 28*a* and 28*c* of the wiring apparatuses 27 are removably connected to one another by mating.

The wiring structure of each of the modules M shown in FIGS. 4 to 7 are suitably selected according to a desired power generation, and the series connection, parallel connection, and series-parallel connection may be combined. Since the connectors can be connected and disconnected, as mentioned later, the modules M can be increased in number, replaced, or connected in different ways after they are set on the building.

FIGS. 8A to 8D, 9A and 9B show single-core wiring apparatuses 16 and 17. The apparatuses 16 and 17, which connect module units MN electrically to one another, are used as output lines for fetching the output of the photovoltaic panel 15. The wiring apparatuses 16 and 17 may be also used as the wiring apparatuses 25 to 27 shown in FIGS. 5 to 7.

The one wiring apparatus 16 serves for a negative electrode, for example. The apparatus 16 comprises one trunk cable 31 and a plurality of branch cables 32. As shown in FIG. 9A, the trunk cable 31 is composed of an insulated wire that includes a trunk conductor 31*a* for conducting the output of the module unit MN and a protective sheath 31*b* externally covering the conductor 31*a*. The branch cable 32 is composed of an insulated wire that includes a branch conductor 32*a* for conducting the output of the module unit MN and a protective sheath 32*b* externally covering the conductor 32*a*. Distribution cables or mobile cables may be used as the cables 31 and 32. Available distribution cables include cross-linked polyethylene cables, such as CV (cross-linked-polyethylene-insulated vinyl sheath) cables, CE (cross-linked-polyethylene-insulated polyethylene sheath) cables, etc. Vinyl-insulated vinyl sheath cables may be given as alternative polyethylene cables. VCT (vinyl-insulated cabtyre) cables or the like may be used as the mobile cables. In these cables, the protective sheaths 31*b* and 32*b* are formed of vinyl or polyethylene sheaths.

A plurality of branch junctions 33 are attached individually to longitudinally intermediate portions of the trunk cable 31. As shown in FIGS. 9A and 9B, each junction 33 includes a molded body 33*e* of an electrically insulating synthetic resin material and a cover member 33*f* that covers the outer surface of the body 33*e*. A cylindrical trunk cable connecting portion 33*a* protrudes integrally from one end face of the cover member 33*f*. A cylindrical trunk cable connecting portion 33*b* and a branch cable connecting portion 33*c* protrude integrally from the other end face of the cover member 33*f*. The trunk cable 31 is inserted in each of the trunk cable connecting portions 33*a* and 33*b*. One end portion of the branch cable 32 is inserted in the branch cable connecting portion 33*c*. In each branch junction 33, the trunk conductor 31*a* and the branch conductor 32*a* are connected electrically to each other.

The protective sheath 31*b* of the trunk cable 31 is formed integrally with each branch junction 33 in a manner such that the portions that are inserted in the cable connecting portions 33*a* and 33*b* are thermowelded to the cover member 33*f*. The protective sheath 32*b* of the branch cable 32 is formed integrally with each branch junction 33 in a manner such that the portion that is inserted in the cable connecting portion 33*c* is thermowelded to the cover member 33*f*. In order to form the cover member 33*f* integrally with the connecting portions 33*a*, 33*b* and 33*c*, it is advisable to use electrical insulating materials of the same kind for the member 33*f* and the protective sheaths 31*b* and 32*b*. More specifically, the cover member 33*f* and the sheaths 31*b* and 32*b* should be formed of insulating materials that are melted to each other by heating, or preferably highly fusible materials, or most preferably the same thermoplastic electrical insulating material. In the case of the first embodiment that uses the protective sheaths 31*b* and 32*b* of vinyl, for example, non-crosslinked polyethylene is used as the insulating material for the cover member 33*f*. In a desired case, the protective sheaths 31*b* and 32*b* of the cables 31 and 32 may be formed of a self-extinguishing flame-retardant material, such as soft PVC (polyvinyl chloride) or flame-retardant polyethylene. In this case, the wiring apparatuses 16 and 17 are flame-retardant. If the protective sheaths 31*b* and 32*b* of the cables 31 and 32 and the cover member 33*f* are formed of CE and flame-retardant polyethylene, respectively, the wiring apparatuses 16 and 17 are products that contain no vinyl chloride.

Since the cable connecting portions 33*a* to 33*c* of each branch junction 33 are thin-walled, they have some flexibility. This flexibility prevents excessive stress from acting on the cable connecting portions 33*a* to 33*c* of the cables 31 and 32, so that the portions 33*a* to 33*c* hardly snap compared with a rigid and fragile one. The body 33*e* of each branch

junction **33** and other principal parts than the cable connecting portions **33***a* to **33***c* are rigid.

As shown in FIG. **8**A, connectors **34** are attached individually to at least one end, or preferably two opposite ends, of the trunk cable **31** and the respective distal ends of the branch cables **32** that diverge individually from the branch junctions **33**. The connectors **34** have the same construction and are arranged in the manner shown in FIG. **8**C, for example. A connecting hole **34***a* is formed in each connector **34**, and a plug-shaped male terminal **34***b* is located in the central portion of the hole **34***a*. Stepped indentations are formed on the inner peripheral surface of the connecting hole **34***a*, escalating in the axial direction of the hole **34***a*.

Since the other wiring apparatus **17** for positive electrode is arranged in the same manner as the wiring apparatus **16** except for the use of the connectors **34**, common reference numerals are used to designate common portions throughout the drawings for simplicity of illustration. Connectors **35** are attached individually to at least one end of the trunk cable **31** of the apparatus **17** and the respective distal ends of the branch cables **32**. As shown in FIG. **8**D, for example, each connector **35** has a receptacle-shaped female terminal **35***b* in the central portion of an insert portion **35***a*. Indentations corresponding in shape to the indentations of the connecting hole **34***a* of each connector **34** are formed on the outer peripheral surface of the insert portion **35***a*.

The connectors **22***a*, **23***a* and **28***a* to **28***c* in each module unit MN are constructed in the same manner as either of the connectors **34** and **35**. The connectors **34** and **35** can be removably fitted with each other by mating. As the connectors **34** and **35** are fitted in this manner, their respective terminals **34***b* and **35***b* are connected electrically to each other.

As shown in FIG. **3**, the two lead-in wires **18** are used for positive and negative electrodes. A branch junction **36** is provided on the outdoor-side end portion of each lead-in wire **18**. Each branch junction **36** is provided with a plurality of (e.g., a pair of) outgoing branch lines **36***a*. Each outgoing line **36***a* has a connector **36***b* on its distal end. The connector **34** or **35** is removably connected to each connector **36***b* by mating.

As shown in FIG. **3**, the eight module units MN, which are arranged to constitute an array, are connected in parallel with the two lead-in wires **18** by means of two pairs of wiring apparatuses **16** and **17**. Each four adjacent module units MN are connected by means of each corresponding pair of wiring apparatuses **16** and **17**. The connectors **34** that are attached to the respective distal ends of the trunk cables **31** of the wiring apparatuses **16** for negative electrode, out of the wiring apparatuses **16** and **17**, and the connectors **34** that are attached to the respective distal ends of the branch cables **32** are connected individually to the connectors **24***a* for negative-electrode of each four adjacent module units MN by mating. In the parallel-connected or series-parallel-connected module units MN shown in FIGS. **5** to **7**, these connectors **34** are connected to their corresponding connectors **28***b*. As shown in FIG. **3**, the connectors **35** that are attached to the respective distal ends of the trunk cables **31** of the wiring apparatuses **17** for positive-electrode and the connectors **35** that are attached to the respective distal ends of the branch cables **32** are connected individually to the connectors **24***a* for positive-electrode of the four adjacent module units MN by mating. In the parallel-connected or series-parallel-connected module units MN shown in FIGS. **5** to **7**, these connectors **35** are connected to their corresponding connectors **28***b*. Like the aforesaid wiring apparatuses **16** and **17**, the ones used in the other four module units MN are connected to their corresponding connectors **24***a* and the like. The connectors **34** that are attached to the respective other ends of the trunk cables **31** of the two wiring apparatuses **16** for negative electrode are connected individually to the connectors **36***b* of the one lead-in wire **18** by mating. Likewise, the connectors **35** that are attached to the respective other ends of the trunk cables **31** of the two wiring apparatuses **17** for positive electrode are connected individually to the connectors **36***b* of the other lead-in wire **18** by mating. In doing this, the wiring apparatuses **16** and **17** may be connected to the module units MN after they are connected to the lead-in wires **18**. By doing this, the eight module units MN can be connected in parallel with one another. In FIG. **3**, each trunk cable **31** is represented by a thick line and each branch cable **32** by a fine line.

Since the respective output terminals of the module units MN are connected to one another by means of the wiring apparatuses **16** and **17** that include the trunk cable **31** and the branch cables **32** each, rough wiring work for the apparatuses **16** and **17** can be carried out before the module units MN are set on a roof or the like. When the module units MN are set on the roof or the like after the wiring work, the wiring apparatuses **16** and **17** can be connected to the module units MN. Accordingly, wiring operation can be executed safely and easily on a roof or some other high place. Since the wiring apparatuses **16** and **17** can be connected at a stroke by means of the mating connectors, in particular, the wiring operation can be easily achieved without requiring any laborious connecting operation, such as soldering. Since the mating connectors are used as connecting structures, moreover, there is no possibility of connection between male connectors or between female connectors, so that misconnection can be avoided.

In the aforesaid wiring structure, the respective trunk cables **31** of the wiring apparatuses **16** and **17** serve as common wiring members for the individual module units MN. Each branch cable **32** is expected to have only a short length ranging from its corresponding trunk cable **31** to the output terminal of a module unit MN. Thus, the necessary number of electric wires and other wiring members for the entire photovoltaic generation system **12** can be reduced, so that the laying efficiency can be improved. Further, the parallel connection based on the wiring apparatuses **16** and **17** requires use of the only two lead-in wires **18** that extend from the photovoltaic panel **15** into the house. Accordingly, laying of the generation system **12** on the roof **11***a* or the like, involving the wiring work, can be carried out very easily. Since the wiring structure requires the only two lead-in wires **18**, moreover, the possibility of wrong wiring is lowered, and only a small hole for the lead-in wires should be bored through a wall of the building. Thus, the building can be easily sealed against rainwater and the like.

In the wiring structure of FIG. **3** that includes the wiring apparatuses **16** and **17**, the trunk cables **31** may be arranged so as to double as lead-in wires **18**. In this case, the trunk cables **31** of the wiring apparatuses **16** and **17** connected to the module unit MN are extended into a housing, and the extended portions of the trunk cables **31** are used as lead-in wires **18**. If the trunk cables **31** have a branch junction **33**, they can be used in place of the branch junctions **36** which have branch lines **36***a* described above. According to this arrangement, the number of connectors used is reduced, so that the connectors can be connected with less time and labor. Since only the trunk cables **31** are needed as the wiring members that extend from the photovoltaic panel **15** into the house, moreover, the wiring work is easier.

In the maintenance of the photovoltaic modules M, the module units MN as objects of maintenance can be separated from the wiring apparatuses **16** and **17** by disengaging the connectors **34** and **35** from themselves. Thus, the maintainability of the modules M can be improved.

In the wiring apparatuses **16** and **17**, the protective sheaths **31***b* and **32***b* of the cables **31** and **32** and the cover members **33***f* of the branch junctions **33** are formed of the same material. Accordingly, the cable connecting portions **33***a* to **33***c* (shown in FIG. **8**A) and the protective sheaths **31***b* and **32***b* of the cables **31** and **32** connected thereto can be satisfactorily thermowelded to one another. In this case, there is no possibility of the connecting portions **33***a* to **33***c* and the sheaths **31***b* and **32***b* being separated from one another. Even though the branch junctions **33** are located outdoors, therefore, it is so water-resistant that the reliability of the wiring apparatuses **16** and **17** to resist penetration of water can be improved.

The modules M that use amorphous cells generate a lower voltage than one generated by modules that use crystalline cells. In the photovoltaic panel **15** of the first embodiment described above, the modules M that constitute each module unit MN are connected in series, and the module units MN are connected in parallel with one another by means of the wiring apparatuses **16** and **17**. According to this photovoltaic panel **15**, a desired voltage can be generated in accordance with the number of series-connected modules M used, and a desired current can be obtained with use of the parallel-connected module units MN. Thus, desired or necessary electric power for use as power supply can be obtained by selecting the numbers of modules M and module units MN. If the module units MN with the parallel-connected or series-parallel-connected wiring structure shown in FIGS. **5** to **7** are combined as required, moreover, voltage and current can be obtained corresponding to the wiring structure, and a desired photovoltaic source can be obtained.

FIGS. **10** and **11** are circuit diagrams illustrating a second embodiment of the present invention. The second embodiment differs from the first embodiment in that each branch junction **33** is provided with a switch **41** for use as circuit changing means. The circuit changing switch **41** is designed so that it can switch the electrical connection between the module units MN to either of the series- and parallel-connection modes. For other components, the second embodiment is constructed in the same manner as the first embodiment, so that common reference numerals are used to designate common portions of the two embodiments throughout the drawings for simplicity of illustration. The following is a description of the circuit changing switch **41**. A pair of two-core wiring apparatuses **16** and **17** are used according to the second embodiment. The wiring apparatuses **16** and **17** may be used to connect the modules M in place of the module units MN.

The wiring apparatuses **16** and **17** according to the second embodiment, which extend parallel to each other, are united together to constitute one two-core wiring apparatus, apparently. A plurality of branch junctions **33** are attached to longitudinally intermediate portions of the wiring apparatuses **16** and **17**. Each branch junction **33** incorporates a two-throw circuit changing switch **41**, which serves as circuit changing means. The switch **41** includes first and second switch sections **41***a* and **41***b*, which are interlocked to perform circuit changing operation. A switch operating member (not shown) for shifting the switch **41** is exposed in the outer surface of the branch junction **33**. The switch operating member shifts the circuit changing switch **41** as it is manually actuated by sliding or snapping operation.

The first switch section **41***a* is composed of a common contact **42**, contact **42***a* for parallel connection, contact **42***b* for series connection, movable contact **42***c*, etc. Likewise, the second switch section **41***b* is composed of a common contact **43**, contact **43***a* for parallel connection, contact **43***b* for series connection, movable contact **43***c*, etc. The movable contacts **42***c* and **43***c* are activated in association with the switch operating member.

The series-connection contact **42***b* of the first switch section **41***a* is connected to the parallel-connection contact **43***a* of the second switch section **41***b*. The trunk cable **31** of the one wiring apparatus **16** is connected to the contacts **42***b* and **43***a*. The trunk cable **31** of the apparatus **16** and one branch cable **32** are connected to the common contact **43** of the second switch section **41***b*. The parallel-connection contact **42***a* of the first switch section **41***a* is connected to the trunk cable **31** of the other wiring apparatus **17**. The other branch cable **32** is connected to the common contact **42** of the first switch section **41***a*.

Connectors **44** and **45** shown in FIGS. **10** and **11** are mating-type connectors that can be attached to and detached from one another. The connectors **44** and **45** are used to attach and detach the trunk cables **31** between the branch junctions **33**. For other components, the second embodiment is constructed in the same manner as the first embodiment.

FIG. **10** shows a state in which the module units MN according to the second embodiment are connected in series with one another. In this state of connection, the movable contacts **42***c* and **43***c* of the switch sections **41***a* and **41***b* are in contact with their corresponding series-connection contacts **42***b* and **43***b* in all the branch junctions **33** except a final branch junction **33**A at the end remoter from the lead-in wires **18**. In the final branch junction **33**A, the movable contacts **42***c* and **43***c* are in contact with their corresponding parallel-connection contacts **42***a* and **43***a*. Thus, all the module units MN are connected in series with one another.

FIG. **11** shows a state in which the module units MN are connected in parallel with one another. In this state of parallel connection, the movable contacts **42***c* and **43***c* of the switch sections **41***a* and **41***b* are in contact with their corresponding parallel-connection contacts **42***a* and **43***a* in all the branch junctions **33**. Thus, all the module units MN are connected in parallel with one another.

In the photovoltaic generation system that comprises the two-core wiring apparatuses **16** and **17** and the circuit changing switch **41** described above, the module units MN (or modules M) can be connected in series or parallel with one another by operating the respective circuit changing switches **41** of the branch junctions **33** as required at the scene of laying. Thus, the wiring apparatuses **16** and **17** can be used in common for both the series and parallel connections between the module units MN or modules M.

Accordingly, wiring apparatuses need not be produced separately for series and parallel connections, so that the productivity of the wiring apparatuses can be improved. Besides, the module units MN can be connected in series or parallel with one another by operating the circuit changing switches **41** as required at the scene of laying, so that prearrangement for laying operation and the laying efficiency can be improved. In adding some extension module units MN or modules M to the system or in some other cases, moreover, the resulting modification of wire arrangement can be tackled with ease. Maintenance of the system is easy for the same reason. For other functions and effects than those described above, the second embodiment resembles the first embodiment, so that a repeated description will be omitted.

FIG. **12** is a circuit diagram showing a third embodiment of the present invention. The third embodiment differs from the second embodiment in that the system is provided with bypass diodes **51** for the maintenance of output and check diodes **52**. Diodes **53** are components of photovoltaic cells. For other components, the third embodiment is constructed in the same manner as the second embodiment, so that common reference numerals are used to designate common portions of the two embodiments throughout the drawings for simplicity of illustration. The following is a description of the diodes **51** and **52**.

In each of branch junctions **33**, the bypass diode **51** is situated between a series-connection contact **43***b* of the second switch section **41***b* and the trunk cable **31** that is connected to a parallel-connection contact **43***a*. The diode **51** is connected to the series-connection contact **43***b* so that its polarity is directed in the manner shown in FIG. **12**. In this case, a bypass circuit including the bypass diodes **51** is formed in parallel with a plurality of module units MN or modules M when movable contacts **43***c* are brought into contact with their corresponding series-connection contacts **43***b* to connect the module units MN or modules M in series with one another. Thus, the bypass circuit is turned on when circuit changing switches **41** are in the series-connection mode. When the switches **41** are shifted to the parallel-connection mode, the bypass circuit is turned off.

If some of the module units MN or modules M are shaded or broken when they are connected in series with one another, therefore, the respective outputs of the remaining normal module units MN or modules M can be fetched from lead-in wires **18** via the bypass circuit. Thus, the outputs of the normally operating module units MN or modules M can be fetched without being damaged.

In each branch junction **33**, the first check diode **52** is located between a parallel-connection contact **42***a* of the first switch section **41***a* and the trunk cable **31** of a wiring apparatus **17** for positive electrode so that its polarity is directed in the manner shown in FIG. **12**. The diodes **52** function when their corresponding circuit changing switches **41** are shifted to the parallel-connection mode so that the module units MN or modules M are connected in parallel. When the module units MN or modules M are connected in parallel with one another, the diodes **52** prevent current that flows through the wiring apparatus **17** for positive electrode from flowing back into the module units MN or modules M via the first switch sections **41***a*.

If some of the module units MN or modules M in a photovoltaic generation system are shaded or broken, their outputs sometimes may be reduced to zero or below those of the remaining normal module units MN or modules M. If the module units MN or modules M are connected in parallel without the use of check diodes in this case, the output currents of high-output module units or modules flow back into low-output (or zero-output) module units or modules through the wiring apparatuses, so that the output sometimes cannot be fetched normally. According to the photovoltaic generation system of the third embodiment that is provided with the check diodes **52**, however, the general output of the system can be fetched securely without damaging the respective outputs of the normally operating module units MN or modules M. For other functions and effects than those described above, the third embodiment resembles the second embodiment, so that a repeated description will be omitted. Although each check diode **52** is located in a circuit for positive-electrode according to the third embodiment, it may alternatively be located in a circuit for negative-electrode.

FIGS. **13** to **17**B show a fourth embodiment of the present invention. According to the fourth embodiment, a plurality of modules M or module units MN are connected in parallel with one another by means of multi-core (more specifically, two-core) wiring apparatuses **19** and **20**. The respective output terminals of the modules M or module units MN and the wiring apparatuses **19** and **20** are connected directly to one another by means of connectors. For other components, the fourth embodiment is constructed in the same manner as the first embodiment, so that common reference numerals are used to designate common portions of the two embodiments throughout the drawings for simplicity of illustration. The following is a description of differences from the first embodiment.

FIGS. **15**A to **15**E show a terminal box **21**. The terminal box **21** includes a body **61** fixed to the back surface of each module M, a lid **62** covering an opening of the body **61**, and a pair of metallic connecting terminals **63**. The body **61** and the lid **62** are formed of an electrical insulating material each. The lid **62** is fixed to the body **61** in a manner such that part of it is anchored to hook portions on the body **61**. A fitting protrusion **64** protrudes outward from the central portion of one end face of the body **61**. A pair of apertures **65** are formed in the body **61**, opening on the back side of the module M. A circumferentially continuous engaging groove **64***a* is formed on the outer surface of the fitting protrusion **64**.

The connecting terminals **63** are mounted in the body **61**. A connecting pin **66** is formed on one end portion of each connecting terminal **63**. The pins **66** project outward from the fitting protrusion **64** in parallel relation. The two connecting pins **66** serve as output terminals of each module M. The other end portion of each connecting terminal **63**, which faces each corresponding aperture **65**, is formed having a connecting groove **67**. Output lines of the module M that are led into the terminal box **21** are anchored to the connecting grooves **67**, individually. The output lines are connected to their corresponding terminals **63** by soldering or the like. The output lines and the terminals **63** are connected not at the scene of installation of the photovoltaic panel **15** on the roof but in a manufacturing process for the panel **15**. If each terminal **63** requires connection of a plurality of output lines, it should only be provided with a plurality of connecting grooves **67**.

The lid **62** has an insert guide tube portion **62***a* on its one end. The guide tube portion **62***a* surrounds the fitting protrusion **64** and the two connecting pins **66**. A connector **71** for insertion (mentioned later) can be inserted into the tube portion **62***a*. The tube portion **62***a* protects the fitting protrusion **64** and connecting pins **66**, and keeps their water proofing.

FIG. **16** shows a two-core wiring apparatus **19**. This wiring apparatus **19** comprises a trunk cable **31** having a pair of trunk conductors **31***a*, a plurality of branch junctions **33** attached individually to longitudinally intermediate portions of the cable **31**, and branch cables **32** diverging from the cable **31** at the branch junctions **33**, individually. As shown in FIG. **17**A, each branch cable **32** includes a pair of branch conductors **32***a*. One branch conductor **32***a* is connected to one trunk conductor **31***a* in each branch junction **33**. The other branch conductor **32***a* is connected to the other trunk conductor **31***a* in each branch junction **33**. Thus, the branch cables **32** diverge in parallel with one another from the trunk cable **31**. Female connectors **71** are connected individually to the opposite ends of the trunk cable **31** and the respective distal ends of the branch cables **32**.

As shown in FIGS. **17**A and **17**B for representative illustration, each connector **71** is provided with two

receptacle-shaped female connecting terminals **72** that are connected to the two branch conductors **32***a*, individually. A fitting hole **73** is formed in the connector **71**, facing the terminals **72**. The hole **73** opens in the distal end face of the connector **71**. A circumferentially continuous engaging protrusion **73***a* is formed on the inner peripheral surface of the fitting hole **73**. The female connector **71** is caused to mate with the fitting protrusion **64** in a manner such that it is inserted into the guide tube portion **62***a* of the terminal box **21** shown in FIG. **15**A. As the engaging groove **64***a* engages the engaging protrusion **73***a*, the engagement between the terminal box **21** and the connector **71** is maintained, and the connecting pins **66** are connected electrically to their corresponding connecting terminals **72**. Since that part of the connector **71** near the engaging protrusion **73***a* is somewhat transformable, the connecting pins **66** can be disengaged from the connecting terminals **72** by strongly pulling the connector **71** away from the terminal box **21**.

FIG. **14** shows a case where a plurality of modules M are connected parallel with one another by means of the two-core wiring apparatus **19**. In FIG. **14**, a thick line represents the trunk cable **31**, while double lines represent the branch cables **32**, individually. A connector **76** for two-core cable that is connected to the wiring apparatuses **16** and **17** is removably connected to its corresponding connector **71** by mating.

FIG. **13** shows another case where the two-core wiring apparatus **20** is used. The wiring apparatus **20** is constructed in the same manner as the wiring apparatus **19** (shown in FIG. **14**) except for connectors **75** that are attached individually to the respective distal ends of a trunk cable **31** and branch cables **32**. Each connector **75** has a male structure such that it can mate with each corresponding female connector **71**. Each connector **75** includes a pair of connecting pins (not shown) that are connected individually to the two terminals **72** of the female connector **71**. The male and female connectors are replaceable with one another. If the connectors **71** are of the male type, therefore, the connectors **75** can be of the female type.

FIG. **13** shows the case where a plurality of module units MN are connected in parallel with one another by means of the wiring apparatus **20**. In FIG. **13**, a thick line represents the trunk cable **31**, while double lines represent the branch cables **32**, individually. A connector **77** for multi-core cable is provided on lead-in wires **18** shown in FIG. **13**. The respective trunk cables **31** of a pair of wiring apparatuses **20** are connected to the connector **77**.

Since the wiring apparatuses **19** and **20** according to the fourth embodiment have the two-core structure, the apparent necessary number of cables can be halved to make the wiring structure simpler than in the case where the single-core wiring apparatuses are used. Since the modules M and the wiring apparatuses **19** and **20** are connected by means of the connectors **71** or **75**, moreover, laborious connecting operation such as soldering need not be carried out at the scene of installation of the photovoltaic generation system **12**. Besides, circuits for positive- and negative-electrode can be connected simultaneously by fitting the male and female connectors with one another, so that labor for the connecting operation can be saved. Thus, the working efficiency for the installation of the photovoltaic generation system can be improved.

For other functions and effects than those described above, the fourth embodiment resembles the second embodiment, so that a repeated description will be omitted. The connectors **71** of the module units MN according to the fourth embodiment are also applicable to the cases of the first embodiment and the like in which the single-core wiring apparatuses are used. Thus, the output lines can be prevented from hanging outside from the ends of the photovoltaic modules.

FIGS. **18**A, **18**B, **19**A and **19**B show a fifth embodiment of the present invention. The fifth embodiment differs from the first embodiment in that junction cables **85** for trunk and branch lines are attached as required to branch junctions **33**. For other components, the fifth embodiment is constructed in the same manner as the first embodiment, so that common reference numerals are used to designate common portions of the two embodiments throughout the drawings for simplicity of illustration. The following is a description of differences from the first embodiment.

As shown in FIG. **18**A, a first cable connecting portion **81** is attached to each end face of each branch junction **33**. Adjoining the first cable connecting portion **81**, a second cable connecting portion **82** is attached to one end face of each branch junction **33**. The two first cable connecting portions **81** are connected to a trunk cable **31**, and the second cable connecting portion **82** to its corresponding branch cable **32**. The connecting portions **81** and **82** have the same male connector structure of the terminal box **21** described in connection with the fourth embodiment (FIG. **17**A), for example. Although the connector shown in FIG. **17**A is a two-core connector, connectors according to the fifth embodiment (FIGS. **18**A and **18**B) are single-core connectors. Instead of male connectors at the cable connecting portions **81** shown in FIG. **18**B, connectors that resemble the female connector **71** shown in FIG. **17**A may be attached directly to each branch junction **33**.

A pair of connectors **83** are attached individually to the opposite ends of the trunk cable **31**. One connector **83** is removably connected to one of the first cable connecting portions **81** by mating. A pair of connectors **84** are also attached individually to the opposite ends of each branch cable **32**. One connector **84** is removably connected to the second cable connecting portion **82** by mating. The connectors **83** and **84** may be either female or male connectors. In the illustrated case, however, both the first and second cable connecting portions **81** and **82** are of the male type, so that the connectors **83** and **84** are female connectors.

As shown in FIG. **19**A, a junction cable **85** may be connected between any of the first cable connecting portions **81** and its corresponding connector **83** on the trunk cable **31**, depending on the conditions for the installation of the photovoltaic modules. Depending on the module installation conditions, moreover, a junction cable **85** may be connected between any of the second cable connecting portions **82** and the connector **84** on its corresponding branch cable **32**. As shown in FIG. **19**B, each junction cable **85** has a first connector **86** on its one end and a second connector **87** on the other end. The first connector **86** is removably connected to the first or second cable connecting portion **81** or **82** by mating. Since the cable connecting portions **81** and **82** are of the male type, the first connector **86** is of the female type. The second connector **87** is removably connected to any connector **83** on the trunk cable **31** or any connector **84** on any branch cable **32** by mating. Since the connectors **83** and **84** are of the female type, the second connector **87**, like the cable connecting portions **81** and **82**, is of the male type. If a plurality of junction cables **85** are expected to be connected in series with one another, each two cables **85** can be connected in a manner such that the first connector **86** on one cable **85** is made to mate with the second connector **87** on the other cable **85**. For other components than those

described above, the fifth embodiment is constructed in the same manner as the first embodiment.

With use of the wiring apparatuses **16** and **17** having the aforementioned constructions, the trunk cable **31** can be removably connected to the first cable connecting portions **81** on each branch junction **33** by mating, and any branch cable **32** can be removably connected to any second cable connecting portion **82** by mating. In the maintenance of the photovoltaic modules, therefore, they can be separated from the wiring apparatuses **16** and **17** by disengaging the trunk and branch cables **31** and **32** from the cable connecting portions **81** and **82**. Thus, the photovoltaic modules that require maintenance can be separated from the wiring apparatuses **16** and **17**, so that the possibility of the apparatuses **16** and **17** hindering the maintenance can be reduced. In consequence, the working efficiency for the maintenance can be improved.

If necessary, moreover, the junction cable **85** can be connected between the first cable connecting portion **81** of each branch junction **33** and the trunk cable **31** to be connected thereto or between the second cable connecting portion **82** and the branch cable **32** to be connected thereto. In this case, the connectors **86** and **87** on the junction cable **85** are connected, respectively, to the cable connecting portion **81** or **82** and the connector **83** or **84** of the trunk cable **31** or the branch cable **32** after the cable **31** or **32** is disengaged from the connecting portion **81** or **82**. With use of the junction cable **85**, the substantial wiring length of each trunk or branch cable **31** or **32** can be made longer than in the case where no junction cable is used. Thus, depending on the use of junction cables **85** or the number of junction cables **85** used, the respective lengths of the trunk and branch cables **31** and **32** can be adjusted so as to fit the layout or configuration of the photovoltaic modules or module units. Accordingly, the photovoltaic modules can be increased for extension or rearranged with ease. Commercially available cables may be used as the junction cables **85**. In this case, there is no necessity for developing new products for the cables **85**, so that the cable **85** can be available at low cost. For other functions and effects than those described above, the fifth embodiment resembles the first embodiment, so that a repeated description will be omitted. The fifth embodiment is also applicable to multi-core (e.g., two-core) wiring apparatuses.

FIGS. **20** and **21** show a sixth embodiment of the present invention. The sixth embodiment differs from the first embodiment in that an auxiliary trunk cable **95** and an auxiliary branch cable **96** are connected as required to a trunk or branch cable **31** or **32**. For other components, the sixth embodiment is constructed in the same manner as the first embodiment, so that common reference numerals are used to designate common portions of the two embodiments throughout the drawings for simplicity of illustration. The following is a description of differences from the first embodiment.

As shown in FIG. **20**, a plurality of wiring units **91** are coupled to wiring apparatuses **16** and **17**. Each wiring unit **91** includes a trunk cable **31**, a branch junction **33** attached to the cable **31**, and a branch cable **32** diverging from the branch junction **33**. Connectors **92** and **93** are provided on one and the other ends, respectively, of the trunk cable **31**. A connector **94** is provided on the distal end of the branch cable **32**. The connectors **92** and **93**, which are of different types, male or female, can be removably connected to each other by mating. The connector **94** on the branch cable **32** may be of the male or female type, or more specifically, of the same type as one of the connectors **92** and **93**. The respective connectors **92** and **93** of the adjacent wiring units **91** are removably connected to one another by mating, thereby forming wiring apparatuses **16** and **17** with a desired length.

FIGS. **21** and **22** show an auxiliary trunk cable **95** and an auxiliary branch cable **96** that are connected as required to one of the wiring units **91**. The cables **95** and **96** have the same construction. As shown in detail in FIG. **22**, each of the cables **95** and **96** has a first connector **97** of the male type on its one end and a second connector **98** of the female type on the other end. The first connector **97** is removably connected to the female connector **93** by mating. The second connector **98** is removably connected to the male connector **92** or **94** by mating. For other components, the sixth embodiment is constructed in the same manner as the first embodiment.

With use of the wiring apparatuses **16** and **17** that are provided with the wiring units **91**, the auxiliary trunk cable **95** or the auxiliary branch cable **96** can be removably connected to the connectors **92**, **93** and **94**, which are provided on the trunk and branch cables **31** and **32**, by mating. The respective connectors **92** and **93** of a plurality of trunk cables **31** can be removably connected to one another by mating. The connector **94** of each branch cable **32** can be also removably connected to another connector by mating. In the maintenance of the photovoltaic modules, therefore, the modules that require maintenance and the wiring units **91** corresponding to the modules can be separated from the wiring apparatuses **16** and **17** by disengaging the connectors **92**, **93** and **94** from their fellow connectors. Thus, the photovoltaic modules that require maintenance can be separated from the wiring apparatuses **16** and **17**, so that there is no possibility of the apparatuses **16** and **17** hindering the maintenance. In consequence, the working efficiency for the maintenance can be improved.

If necessary, moreover, the auxiliary trunk cables **95** can be connected individually to the respective trunk cables **31** of the wiring units **91** by mating using the connectors **92**, **93**, **97** and **98**. If necessary, furthermore, the auxiliary branch cables **96** can be connected individually to the branch cables **32** by means of the connectors **94**, **97** and **98**. With use of these auxiliary cables **95** and **96**, the substantial wiring lengths of the trunk and branch cables **31** and **32** can be made longer than in the case where no auxiliary cables are used. Thus, depending on the use of the auxiliary cables **96** and **96** or the number of auxiliary cables used, the respective lengths of the trunk and branch cables **31** and **32** can be adjusted so as to fit the layout or configuration of the photovoltaic modules or module units. Accordingly, the photovoltaic modules can be increased for extension or rearranged with ease. Commercially available cables may be used as the auxiliary cables **95** and **96**. In this case, there is no necessity for developing new products for the cables **95** and **96**, so that the cables **95** and **96** can be available at low cost.

For other functions and effects than those described above, the sixth embodiment resembles the first embodiment, so that a repeated description will be omitted. As shown in FIGS. **23**A, **23**B and **23**C, moreover, the sixth embodiment is also applicable to multi-core (e.g., two-core) wiring apparatuses. An auxiliary cable **99** shown in FIG. **23**A includes a pair of electric wires **99***a*. One end of each wire **99***a* is connected to its corresponding one of a pair of connecting pins **97***a* that are arranged in the first connector **97** of the female type. The other end of each wire **99***a* is connected to its corresponding one of a pair of receptacle-shaped connecting terminals **98***a* that are arranged in the second connector **98** of the male type. With use of these

connectors **97** and **98**, the two-core auxiliary cable **99** can be connected to the two-core wiring apparatuses **16** and **17**. As shown in the front views of FIGS. **23**B and **23**C, the connectors **97** and **98** of the auxiliary cable **99** have a bisymmetrical shape such that the connecting pins **97***a* and the connecting terminals **98***a* have directivity for connection. With this arrangement, the pins **97***a* and the terminals **98***a* can be connected without a mistake in polarity. This concept is also applicable to the connector connection for the single-core cables according to the first embodiment and the like. For example, a connector for positive electrode and a connector for negative electrode may have different shapes, so as to avoid wrong connection of them.

The present invention is not limited to the embodiments described above. For example, the components of the foregoing embodiments may be combined optionally or selectively to provide photovoltaic generation systems, wiring apparatuses, and wiring structures according to alternative embodiments that have functions equivalent to or different from those of the foregoing embodiments.

Additional advantages and modifications will readily occur to those skilled in the art. Therefore, the invention in its broader aspects is not limited to the specific details and representative embodiments shown and described herein. Accordingly, various modifications may be made without departing from the spirit or scope of the general inventive concept as defined by the appended claims and their equivalents.

What is claimed is:

1. A wiring apparatus for a photovoltaic generation system for connecting respective output terminals of a plurality of generating sections each including photovoltaic modules, the wiring apparatus comprising:

a trunk cable including a trunk conductor for conducting respective outputs of the generating sections;

a plurality of branch cables diverging individually from a plurality of longitudinally intermediate portions of the trunk cable, each branch cable including a branch conductor having one end connected electrically to a longitudinally intermediate portion of the trunk conductor and the other end connected electrically to the output terminal of each corresponding generating section;

branch junctions formed between the trunk cable and the branch cables; and

a plurality of connectors each attached to an end of the trunk cable or a branch cable and adapted to be removably fitted with a connector of an auxiliary cable and used for connecting the trunk cable and/or the branch cables with corresponding auxiliary cables.

2. A wiring apparatus for a photovoltaic generation system according to claim **1**, wherein each branch junction includes a first cable connecting portion removably connected with the trunk cable and a second cable connecting portion removably connected with the branch cable, wherein a junction cable is connectable between the first cable connecting portion and the trunk cable, the junction cable having a first connector removably attachable to the first cable connecting portion and a second connector removably attachable to a connector of the trunk cable, and wherein another junction cable is connectable between the second cable connecting portion and each branch cable, said another junction cable having a first connector removably attachable to the second cable connecting portion and a second connector removably attachable to a connector of each branch cable.

3. A wiring apparatus for a photovoltaic generation system according to claim **2**, wherein said trunk cable and said branch cable have two cores and said first cable connecting portion and said second cable connecting portion have two cores.

4. A wiring apparatus for a photovoltaic generation system according to claim **1**, further comprising a protective sheath formed of a synthetic resin material covering the outer periphery of the trunk cable, protective sheaths formed of the synthetic resin material individually covering the respective outer peripheries of the branch cables, and cover members formed of the synthetic resin material and individually covering the respective outer peripheries of the branch junctions, the cover members being thermowelded to the protective sheath covering the outer periphery of the trunk cable and the protective sheaths covering the outer peripheries of the branch cables.

5. A wiring apparatus for a photovoltaic generation system according to claim **1**, wherein said trunk cable and each branch cable are provided individually with connectors removably connected to the respective output terminals of the generating sections.

6. A wiring apparatus for a photovoltaic generation system according to claim **1**, wherein said wiring apparatus includes said trunk cable, said branch cable and said branch junctions as an integral body, and said branch cables are arranged in a same direction in wiring, but in a direction different from that of said trunk cable.

7. A photovoltaic generation system comprising:

a plurality of generating sections, each including photovoltaic modules located outside a building or module units formed by combining the photovoltaic modules, and

wiring apparatuses for conducting respective outputs of the generating sections into the building, including a trunk cable including a trunk conductor, a plurality of branch cables diverging individually from a plurality of longitudinally intermediate portions of the trunk cable, each branch cable including a branch conductor having one end connected electrically to a longitudinally intermediate portion of the trunk conductor and the other end connected electrically to the output terminal of each corresponding generating section, branch junctions formed between the trunk cable and the branch cables, and a plurality of connectors each attached to an end of the trunk cable or a branch cable and adapted to be removably fitted with a connector of an auxiliary cable and used for connecting the trunk cable and/or the branch cables with corresponding auxiliary cables.

8. A wiring structure for a photovoltaic generation system, including wiring apparatuses for conducting respective outputs of a plurality of generating sections each including photovoltaic modules located outside a building to loads in the building, each wiring apparatus comprising:

a trunk cable including a trunk conductor for conducting the respective outputs of the generating sections,

a plurality of branch cables diverging individually from a plurality of longitudinally intermediate portions of the trunk cable, each branch cable including a branch conductor having one end connected electrically to a longitudinally intermediate portion of the trunk conductor and the other end connected electrically to the output terminal of each corresponding generating section,

branch junctions formed between the trunk cable and the branch cables, and

a plurality of connectors each attached to an end of the trunk cable or a branch cable and adapted to be removably fitted with a connector of an auxiliary cable and used for connecting the trunk cable and/or the branch cables with corresponding auxiliary cables;

wherein the respective output terminals of the generating sections are connected individually by means of the wiring apparatuses and either the trunk cable or lead-in wires connected thereto are led into the building.

9. A wiring apparatus for a photovoltaic generation system for connecting respective output terminals of a plurality of generating sections each including photovoltaic modules, the wiring apparatus comprising:

a trunk cable including a trunk conductor for conducting respective outputs of the generating sections;

a plurality of branch cables diverging individually from a plurality of longitudinally intermediate portions of the trunk cable, each branch cable including a branch conductor having one end connected electrically to a longitudinally intermediate portion of the trunk conductor and the other end connected electrically to the output terminal of each corresponding generating section; and

branch junctions formed between the trunk cable and the branch cables, each including a circuit changing switch capable of switching the connection between the generating sections to either a series- or a parallel-connection mode.

10. A photovoltaic generation system comprising:

a plurality of generating sections, each including photovoltaic modules located outside a building or module units formed by combining the photovoltaic modules, and

wiring apparatuses for conducting the respective outputs of the generating sections into the building, including a trunk cable including a trunk conductor, a plurality of branch cables diverging individually from a plurality of longitudinally intermediate portions of the trunk cable, each branch cable including a branch conductor having one end connected electrically to a longitudinally intermediate portion of the trunk conductor and the other end connected electrically to the output terminal of each corresponding generating section, and branch junctions formed between the trunk cable and the branch cables, each branch junction including a circuit changing switch capable of switching the connection between the generating sections to either a series- or a parallel-connection mode.

11. A wiring structure for a photovoltaic generation system, including wiring apparatuses for conducting respective outputs of a plurality of generating sections each including photovoltaic modules located outside a building to loads in the building, each wiring apparatus comprising:

a trunk cable including a trunk conductor for conducting the respective outputs of the generating sections,

a plurality of branch cables diverging individually from a plurality of longitudinally intermediate portions of the trunk cable, each branch cable including a branch conductor having one end connected electrically to a longitudinally intermediate portion of the trunk conductor and the other end connected electrically to the output terminal of each corresponding generating section, and

branch junctions formed between the trunk cable and the branch cables, each including a circuit changing switch capable of switching the connection between the generating sections to either a series- or a parallel-connection mode;

wherein the respective output terminals of the generating sections are connected individually by means of the wiring apparatuses, and either the trunk cable or lead-in wires connected thereto are led into the building.

12. A wiring apparatus for a photovoltaic generation system for connecting respective output terminals of a plurality of generating sections each including photovoltaic modules, the wiring apparatus comprising:

a trunk cable including a trunk conductor for conducting the respective outputs of the generating sections;

a plurality of branch cables diverging individually from a plurality of longitudinally intermediate portions of the trunk cable, each branch cable including a branch conductor having one end connected electrically to a longitudinally intermediate portion of the trunk conductor and the other end connected electrically to the output terminal of each corresponding generating section; and

branch junctions formed between the trunk cable and the branch cables, each including an electric circuit for connecting the generating sections in parallel with one another, the electric circuit having a check diode for preventing current from flowing from higher-output generating sections, out of the parallel-connected generating sections, to lower-output generating sections.

13. A photovoltaic generation system comprising:

a plurality of generating sections, each including photovoltaic modules located outside a building or module units formed by combining the photovoltaic modules, and

wiring apparatuses for conducting the respective outputs of the generating sections into the building, said wiring apparatuses including a trunk cable including a trunk conductor, a plurality of branch cables diverging individually from a plurality of longitudinally intermediate portions of the trunk cable, each branch cable including a branch conductor having one end connected electrically to a longitudinally intermediate portion of the trunk conductor and the other end connected electrically to the output terminal of each corresponding generating section, and branch junctions formed between the trunk cable and the branch cables, each branch junction including an electric circuit for connecting the generating sections in parallel with one another, the electric circuit having a check diode for preventing current from flowing from higher-output generating sections, out of the parallel-connected generating sections, to lower-output generating sections.

14. A wiring structure for a photovoltaic generation system, including wiring apparatuses for conducting respective outputs of a plurality of generating sections each including photovoltaic modules located outside a building to loads in the building, each wiring apparatus comprising:

a trunk cable including a trunk conductor for conducting the respective outputs of the generating sections,

a plurality of branch cables diverging individually from a plurality of longitudinally intermediate portions of the trunk cable, each branch cable including a branch conductor having one end connected electrically to a longitudinally intermediate portion of the trunk conductor and the other end connected electrically to the output terminal of each corresponding generating section, and

branch junctions formed between the trunk cable and the branch cables, each including an electric circuit for connecting the generating sections in parallel with one another, the electric circuit having a check diode for preventing current from flowing from higher-output generating sections, out of the parallel-connected generating sections, to lower-output generating sections;

wherein the respective output terminals of the generating sections are connected individually by means of the wiring apparatuses, and either the trunk cable or lead-in wires connected thereto are led into the building.

* * * * *